All issues available have
been filmed.
Unfortunately, any
scattered missing issues
are no longer available.

15/1

Customs Bulletin

Regulations, Rulings, Decisions, and Notices concerning Customs and related matters

and Decisions

of the United States Court of Customs and Patent Appeals and the United States Court of International Trade

Vol. 15 JANUARY 7, 1981 No. 1

NEWARK PUBLIC LIBRARY
JAN 19 1981
U. S. GOVT. PUBS.
DEPOSITORY

This issue contains

T.D. 81–1 through 81–3
Proposed Rulemaking
Slip Op. 80–10 through 80–12
Protest abstract P80/188
Reap. abstracts R80/382 through R80/399
International Trade Commission Notices

THE DEPARTMENT OF THE TREASURY
U.S. Customs Service

T1.11/3:

NOTICE

The abstracts, rulings, and notices which are issued weekly by the U.S. Customs Service are subject to correction for typographical or other printing errors. Users may notify the U.S. Customs Service, Logistics Management Division, Washington, D.C. 20229, of any such errors in order that corrections may be made before the bound volumes are published.

For sale by the Superintendent of Documents, U.S. Government Printing Office, Washington, D.C. 20402. Price: $2.25 (single copy domestic); $2.85 (single copy foreign). Subscription price: $85.00 a year domestic; $106.25 a year foreign.

U.S. Customs Service

Treasury Decisions

(T.D. 81-1)

Recordkeeping, Inspection, Search, and Seizure—Customs Regulations, amended

Waiver of bond requirement for property seized in violation of Customs laws because of inability to post bond

TITLE 19—CUSTOMS DUTIES

CHAPTER I—U.S. CUSTOMS SERVICE

PART 162—RECORDKEEPING, INSPECTION, SEARCH, AND SEIZURE

AGENCY: U.S. Customs Service, Department of the Treasury.

ACTION: Final rule.

SUMMARY: This document amends the Customs Regulations to allow the District Director of Customs, upon satisfactory proof of a person's financial inability to post bond, to waive the requirement for a bond if that person's property, valued not in excess of $10,000, was seized in violation of the Customs laws. The bond requirement has been held unconstitutional because it may deprive the person whose property has been seized of an opportunity for a judicial hearing to determine liability solely because of inability to post a bond.

EFFECTIVE DATE: (Effective on publication in the Federal Register).

FOR FURTHER INFORMATION CONTACT: Joseph Priddy, Entry, Procedures and Penalties Division, U.S. Customs Service, 1301 Constitution Avenue NW., Washington, D.C. 20229; 202-566-5746.

SUPPLEMENTARY INFORMATION:

BACKGROUND

Under section 608, Tariff Act of 1930, as amended (19 U.S.C. 1608), a person may file a claim for property valued not in excess of $10,000,

which was seized in violation of the Customs laws. The claim must be filed with the District Director of Customs within 20 days of the publication of the notice of seizure. Upon filing the claim and posting a bond in the penal sum of $250, the claim is transmitted by the District Director to the U.S. attorney who commences condemnation proceedings which determine liability. Section 162.47(b), Customs Regulations (19 CFR 162.47(b)), implements the bond requirement of section 608.

The U.S. Court of Appeals in *Wiren* v. *Eide*, 542 F. 2d 757 (9th Cir. 1976), held the application of the bond requirement in section 608 to be unconstitutional with respect to indigent persons on due process and equal protection grounds. The court concluded that the fifth amendment prohibits the Government from depriving an individual whose property has been seized of an opportunity for a hearing solely because of inability to post a bond.

The court further held that the interest of the Government in enforcement does not outweigh the possibility of wrongful forfeiture due to lack of opportunity for a hearing. The existence of voluntary remission or mitigation procedures on the part of Customs does not affect the decision.

Currently, section 162.47 does not conform with the court decision or with actual practice which is to waive the bond upon satisfactory proof of financial inability to post the bond. This document amends section 162.47 to allow the District Director to waive the bond requirement upon satisfactory proof by the person claiming an interest in the seized property of financial inability to post the bond.

INAPPLICABILITY OF PUBLIC NOTICE AND DELAYED EFFECTIVE DATE REQUIREMENTS

Inasmuch as this amendment grants rights not presently provided and places no affirmative duty on the public, notice and public procedure are found to be unnecessary pursuant to 5 U.S.C. 553(b)(B), and, pursuant to 5 U.S.C. 553(d), a delayed effective date is not required.

INAPPLICABILITY OF EXECUTIVE ORDER 12044

The document is not subject to the Treasury Department directive published in the Federal Register on November 8, 1978 (43 F.R. 52120), implementing Executive Order 12044, Improving Government Regulations, because the subject matter was in process before May 22, 1978, the effective date of the directive.

REGULATION DETERMINED TO BE NONSIGNIFICANT

In the directive implementing Executive Order 12044, the Treasury Department stated that it considers each regulation or amendment to an existing regulation published in the Federal Register and codified in the Code of Federal Regulations to be significant. However, regulations which are nonsubstantive, essentially procedural, do not materially change existing or establish new policy, and do not impose substantial additional requirements or costs on, or substantially alter the legal rights or obligations of, those affected, may, with Secretarial approval, be determined not to be significant. Accordingly, it has been determined that this document does not meet the Treasury Department criteria in the directive for significant regulations.

DRAFTING INFORMATION

The principal authors of this document were Shannon McCarthy and John Elkins, Regulations and Research Division, Office of Regulations and Rulings, U.S. Customs Service. However, personnel from other Customs offices participated in its development.

AMENDMENT TO THE REGULATIONS

Section 162.47, Customs Regulations (19 CFR 162.47), is amended by:

(1) substituting the words "Except as provided in paragraph (e) of this section, the" for "The" in the first sentence of paragraph (b),

(2) adding the words ", if required," after "bond" in paragraphs (c) and (d), and

(3) adding a new paragraph (e) to read as follows:

162.47 Claim for property subject to summary forfeiture.

* * * * * * *

(e) *Waiver of bond.*—Upon satisfactory proof of financial inability to post the bond, the District Director shall waive the bond requirement for any person who claims an interest in the seized property.

(R.S. 251, as amended, secs. 608, 624, 46 Stat. 755, as amended, 759 (19 U.S.C. 66, 1608, 1624))

WILLIAM T. ARCHEY
(For Commissioner of Customs).

Approved: December 15, 1980.

RICHARD J. DAVIS,
Assistant Secretary of the Treasury.

[Published in the Federal Register, Dec. 24, 1980 (45 F.R. 84993)]

(T.D. 81-2)

Foreign Currencies—Daily Rates for Countries Not on Quarterly List

Rates of exchange based on rates certified to the Secretary of the Treasury by the Federal Reserve Bank of New York for the Brazil cruzeiro, People's Republic of China yuan, Hong Kong dollar, Iran rial, Philippines peso, Singapore dollar, Thailand baht (tical), and Venezuela bolivar

The Federal Reserve Bank of New York, pursuant to section 522(c), Tariff Act of 1930, as amended (31 U.S.C. 372(c)), has certified buying rates for the dates and foreign currencies shown below. The rates of exchange, based on these buying rates, are published for the information and use of Customs officers and others concerned pursuant to part 159, subpart C, Customs Regulations (19 CFR 159, subpart C).

Brazil cruzeiro:	
December 8–10, 1980	$0.0160
December 11–12, 1980	.0156
People's Republic of China yuan:	
December 8–9, 1980	$0.649140
December 10, 1980	.643956
December 11, 1980	.638855
December 12, 1980	.635687
Hong Kong dollar:	
December 8, 1980	$0.194894
December 9, 1980	.194024
December 10, 1980	.192957
December 11, 1980	.192419
December 12, 1980	.192790
Iran rial:	
December 8–12, 1980	Not available
Philippines peso:	
December 8–11, 1980	$0.1324
December 12, 1980	.1320
Singapore dollar:	
December 8, 1980	$0.475964
December 9, 1980	.475059
December 10, 1980	.473709
December 11, 1980	.473485
December 12, 1980	.470146
Thailand baht (tical):	
December 8–11, 1980	$0.0485
December 12, 1980	.0484

Venezuela bolivar:
December 8–12, 1980 ..... $0. 2329

(LIQ–3–01 O:C:E)

Dated: December 12, 1980.

GWENN KLEIN KIRSCHNER,
Acting Chief,
Customs Information Exchange.

(T.D. 81–3)

Foreign Currencies—Variances From Quarterly Rate

The following rates of exchange are based upon rates certified to the Secretary of the Treasury by the Federal Reserve Bank of New York, pursuant to section 522(c), Tarlff Act of 1930, as amended (31 U.S.C. 372(c)), and reflect variances of 5 per centum or more from the quarterly rate published in T.D. 80–249 for the following countries. Therefore, as to entries covering merchandise exported on the dates listed, whenever it is necessary for Customs purposes to convert such currency into currency of the United States, conversion shall be at the following rates:

Austria schilling:
December 8, 1980 ..... $0. 071968
December 9, 1980 ..... .071263
December 10, 1980 ..... .070547
December 11, 1980 ..... .069955
December 12, 1980 ..... .069869

Belgium franc:
December 8, 1980 ..... $0. 031706
December 9, 1980 ..... .031397
December 10, 1980 ..... .030969
December 11, 1980 ..... .030817
December 12, 1980 ..... .030960

Denmark krone:
December 8, 1980 ..... $0. 166528
December 9, 1980 ..... .165017
December 10, 1980 ..... .162813
December 11, 1980 ..... .161812
December 12, 1980 ..... .162536

Finland markka:
December 9, 1980 ..... $0. 258866
December 10, 1980 ..... .257998
December 11, 1980 ..... .255167
December 12, 1980 ..... .256575

France franc:	
December 8, 1980	$0.220434
December 9, 1980	.218245
December 10, 1980	.215424
December 11, 1980	.214707
December 12, 1980	.215750
Germany deutsche mark:	
December 8, 1980	$0.509424
December 9, 1980	.504286
December 10, 1980	.498132
December 11, 1980	.495417
December 12, 1980	.498256
Ireland pound:	
December 8, 1980	$1.8995
December 9, 1980	1.8910
December 10, 1980	1.8615
December 11, 1980	1.8480
December 12, 1980	1.8590
Italy lira:	
December 8, 1980	$0.001074
December 9, 1980	.001064
December 10, 1980	.001053
December 11, 1980	.001049
December 12, 1980	.001052
Netherlands guilder:	
December 8, 1980	$0.469925
December 9, 1980	.465116
December 10, 1980	.459242
December 11, 1980	.456413
December 12, 1980	.458085
Norway krone:	
December 8, 1980	$0.195084
December 9, 1980	.193143
December 10, 1980	.191314
December 11, 1980	.190367
December 12, 1980	.191095
Portugal escudo:	
December 8, 1980	$0.018886
December 9, 1980	.018804
December 10, 1980	.018639
December 11, 1980	.018536
December 12, 1980	.018622

READEX FICHE best copy available

Spain peseta:	
December 8, 1980	$0.012811
December 9, 1980	.012731
December 10, 1980	.012650
December 11, 1980	.012492
December 12, 1980	.012516
Sri Lanka rupee:	
December 8–11, 1980	$0.058140
December 12, 1980	.056402
Sweden krone:	
December 8, 1980	$0.227920
December 9, 1980	.226398
December 10, 1980	.224618
December 11, 1980	.222965
December 12, 1980	.223614
Switzerland franc:	
December 8, 1980	$0.563380
December 9, 1980	.557880
December 10, 1980	.549451
December 11, 1980	.547345
December 12, 1980	.550509

(LIQ-03-01 O:C:E:)

Dated: December 12, 1980.

GWENN KLEIN KIRSCHNER,
Acting Chief,
Customs Information Exchange.

U.S. Customs Service

Proposed Rulemaking

(19 CFR Part 132, 141, and 142)

Proposed Customs Regulations Amendments Relating to Quota Merchandise, Statistical Information, and Merchandise Released Under the Immediate Delivery Procedure

AGENCY: U.S. Customs Service, Department of the Treasury.

ACTION: Proposed rule.

SUMMARY: Public Law 95–410, the Customs Procedural Reform and Simplification Act of 1978, made significant changes in the Customs laws relating, in part, to the entry and warehousing of imported merchandise. Amendments to the Customs Regulations implementing these changes were recently published; however, several sections of the Customs Regulations need further changes. This document proposes to amend the Customs Regulations to:

(1) Clarify the procedure relating to quota merchandise when the quota is nearing fulfillment;
(2) Remove a mandatory requirement to aggregate statistical information from multiple invoices;
(3) Clarify the circumstances under which a District Director may authorize release of merchandise from warehouse under a special permit; and
(4) Clarify what documentation may be filed after merchandise is released under the immediate delivery procedure.

DATE: Comments must be received on or before (60 days from the date of publication in the Federal Register).

ADDRESS: Written comments should be addressed to the Commissioner of Customs, Attention: Regulations and Research Division, U.S. Customs Service, 1301 Constitution Avenue NW., Room 2426, Washington, D.C. 20229.

FOR FURTHER INFORMATION CONTACT: Relating to quota merchandise—Helen Rohrbaugh, Duty Assessment Division, 202–566–8592; Relating to statistical information—William L. Marchi, Duty Assessment Division, 202–566–8235; Relating to merchandise released under the immediate delivery procedure—Benjamin H.

Mahoney, Entry Procedures and Penalties Division, 202–566–5778. U.S. Customs Service, 1301 Constitution Avenue NW., Washington, D.C. 20229.

SUPPLEMENTARY INFORMATION:

BACKGROUND

Public Law 95–410, the Customs Procedural Reform and Simplification Act of 1978, made significant changes in the Customs laws relating, in part, to the entry and warehousing of imported merchandise. Final amendments to the Customs Regulations implementing these changes were published in the Federal Register on August 9, 1979, as T.D. 79–221 (44 F.R. 46794).

Based upon recent experience and further review, Customs has determined that several sections of the Customs Regulations amended by T.D. 79–221 need further changes. Accordingly, this document proposes to amend the following sections of the Customs Regulations:

1. Section 132.13(a)(1), Customs Regulations (19 CFR 132.13(a)(1)), to clarify the procedure relating to quota merchandise when the quota is nearing fulfillment;
2. Sections 141.61 (e)(1)(i) and (f)(2), Customs Regulations (19 CFR 141.61 (e)(1) (i) and (f)(2)), to remove a mandatory requirement to aggregate statistical information from multiple invoices;
3. Section 142.21(f), Customs Regulations (19 CFR 142.21(f)), to clarify the circumstances under which a District Director may authorize release of merchandise from warehouse under a special permit; and
4. Section 142.22(b), Customs Regulations (19 CFR 142.22(b)), to clarify what documentation may be filed after merchandise is released under the immediate delivery procedure.

DISCUSSION OF PROPOSED CHANGES

Section 132.13(a)(1)

As amended by T.D. 79–221, the first sentence of section 132.13 (a)(1)(ii) provides that "Except in emergency cases, as provided for in section 142.21(e)(2) of this chapter, absolute quota merchandise shall not be released under the immediate delivery procedure if the quota is nearing fulfillment." To correct an inconsistency in the regulations, this sentence subsequently was amended by T.D. 80–26, published in the Federal Register on January 21, 1980 (45 F.R. 3901), to provide that "Absolute quota merchandise shall not be released under the immediate delivery procedure if the quota is nearing fulfillment."

A question of interpretation has been raised as to whether absolute quota merchandise could be released under the immediate delivery procedure if the quota were not nearing fulfillment. To clarify this

point, this document proposes to further amend section 132.13 (a)(1)(ii) to provide that except as provided for in section 142.21(e)(2) (relating to perishable merchandise of a class approved by Headquarters subject to an absolute quota) and section 142.21(g) (relating to release of merchandise when authorized by Headquarters), absolute quota merchandise shall not be released under the immediate delivery procedure.

Section 132.12, Customs Regulations, relating to the opening of potentially filled quotas, provides a procedure in paragraph (c) (2) to be used in the event quantities specified on entry summaries for consumption or withdrawals for consumption shall be prorated against the quota quantity.

This document further proposes to amend section 132.13(a)(1) by deleting the last sentence of section 132.13(a)(1)(ii) by and adding a new section 132.13(a)(1)(iii) to provide that the procedure set forth under section 132.12(c)(2), relating to the opening of potentially filled quotas, also applies to tariff and absolute quota when the quota is nearing fulfillment.

Sections 141.61 (e)(1)(i) and (f)(2)

Section 141.61(e)(1)(i), as amended by T.D. 79–221, provides that if a class or kind of merchandise from the same country of origin subject to the same statistical reporting number is included in more than one invoice, the information shall be combined and reported under one statistical reporting number. That section also provides that when consolidating information from several invoices under one reporting number, a worksheet itemizing the entered value of the merchandise from each invoice shall be attached to the appropriate form.

Section 141.61(f)(2), as amended by T.D. 79–221, relating to values on multiple invoices, requires that the aggregate of the entered values of all the merchandise on each of the multiple invoices be shown on an attached worksheet.

The new procedures relating to aggregating statistical information were proposed initially to reduce the loss of statistical data because detailed information on line items of the Tariff Schedules of the United States Annotated (TSUSA) valued under $250 was not reported. By combining data under one TSUSA number, many line items valued under $250 could be included in the detailed data. Additionally, many TSUSA line items on Customs entry summaries could be eliminated, thus realizing significant savings in computer processing time.

The effective date for implementing these sections was September 10, 1979. However, after publication of T.D. 79–221 on August 9, 1979,

a number of individual customhouse brokers, their trade association, and other interested parties advised Customs of serious problems and burdens they were experiencing in attempting to establish procedures to comply with the new regulations.

After reviewing this matter, Customs found there was merit to these complaints. Accordingly, a notice was published in the Federal Register as T.D. 79–248 on September 24, 1979 (44 F.R. 55001), delaying implementation of sections 141.61 (e)(1)(i) and (f)(2), to January 1, 1980. Subsequently, on October 26, 1979, Customs field personnel were directed by Customs Headquarters to advise importers, brokers, and other interested parties that there would be an indefinite delay in implementing these sections.

Customs has determined that the problems and financial burden that the new requirements would impose on certain segments of the importing public outweigh the benefits to be gained in reducing processing costs and time, and providing more complete statistical data.

On the other hand, some importers and nonautomated brokers prefer to aggregate the TSUSA numbers. A practice has been established in many locations to permit entry summaries to be filed in this manner.

Therefore, Customs has determined to permit importers and brokers, at their option, to either:

1. Aggregate the TSUSA number regardless of the number of invoices involved; or
2. List the TSUSA number within each invoice.

This document proposes to amend sections 141.61 (e)(1)(i) and (f)(2) to provide that the broker and importer may use either procedure.

Section 142.21(f)

Section 142.21(f), Customs Regulations (19 CFR 142.21(f)), as amended by T.D. 79–221, provides that at the discretion of the District Director, merchandise may be released from a warehouse under a special permit provided the importer has on file one of the types of Customs bonds provided for in section 142.4, Customs Regulations (19 CFR 142.4).

The purpose of this provision is to avoid unnecessary delay in releasing merchandise from a bonded warehouse when an importer must travel a great distance from: (1) The bonded warehouse to the customhouse to file the withdrawal for consumption with estimated duties attached, and (2) the customhouse to the bonded warehouse to obtain release of the merchandise.

335-081 O - 81 - 2

Under section 142.21(f), an importer may obtain prompt release of merchandise from a bonded warehouse by filing Customs form 3461. The importer may accumulate several of these forms over a period of days and then make one trip to the customhouse within the required 10-day period to file the withdrawal for consumption with estimated duties attached.

However, it appears that some importers, who do not travel great distances between their bonded warehouses and the customhouse and, therefore, can obtain prompt release of merchandise from the warehouse, may take advantage of the benefit of section 142.21(f) merely to forestall the payment of estimated duties until 10 days after release of the merchandise from the bonded warehouse.

This document proposes to amend section 142.21(f) to insure that the procedure will not be used by some importers merely to delay payment of estimated duties. Section 142.21(f) would be amended to provide that the District Director may authorize release from warehouse under a special permit only under the following circumstances:

1. The warehouse is located a considerable distance from the customhouse and actual release of the merchandise from the warehouse could not be effected within the next full business day after the day of the payment of duty, and
2. The district has sufficent manpower to permit such practice.

Section 142.22(b)

Section 142.21, Customs Regulations (19 CFR 142.21), as amended by T.D. 79–221, provides that merchandise may be released under a special permit for immediate delivery, in accordance with section 448(b), Tariff Act of 1930, as amended, under circumstances relating to the following:

1. Contiguous countries,
2. Fresh fruits and vegetables,
3. Agency of the U.S. Government,
4. Articles of a trade fair,
5. Quota-class merchandise,
6. Release from warehouse followed by warehouse withdrawal for consumption, and
7. When authorized by Headquarters.

Section 142.22(b), Customs Regulations (19 CFR 142.22(b)), lists the documentation which must be filed after the release of merchandise for which a special permit for immediate delivery had been issued. They are:

1. An entry summary for consumption, with estimated duties attached, an entry summary for warehouse, or an entry summary for entry under a temporary importation bond;
2. A withdrawal for consumption, with estimated duties attached;

3. An entry for transportation and exportation, immediate transportation without appraisement, or direct exportation; or
4. An application to destroy.

Section 142.28, Customs Regulations (19 CFR 142.28), provides, in part, that an entry for exportation, or for transportation and exportation, or an application to destroy, may be filed for merchandise released under a special permit for immediate delivery and later found to be prohibited.

A question of interpretation was raised by Customs personnel as to under what circumstances, relating to the release of merchandise under the immediate delivery procedure of section 142.21, would the transportation entries specified in section 142.22(b)(3) be used. Transportation entries may be used only with respect to the release of fresh fruits and vegetables under section 142.21(b) and absolute quota merchandise under section 142.21(e)(2). However, section 142.22(b)(3) does not set forth these two circumstances under which the transportation entries may be used. Therefore, an ambiguity may be raised concerning the proper document to be used.

In related matter, section 142.28 provides for the use of an entry for exportation, or for transportation and exportation, or an application to destroy merchandise released and later found to be prohibited. However, neither section 142.22(b)(3) nor 142.22(b)(4) makes any reference to merchandise released under the immediate delivery procedure and later found to be prohibited. An ambiguity also may be raised with regard to the proper documents to be used.

This document proposes to amend section 142.22(b)(3) to provide that the transportation entries shall be filed only in the circumstances under sections 142.21 (b) and (e)(2), and to provide that an entry for exportation, or for transportation and exportation, shall be filed in the circumstance under section 142.28.

Similarly, this document proposes to amend section 142.22(b)(4) to provide that an application to destroy shall be filed in the circumstances under sections 142.21 (b) and (e)(2), and section 142.28.

Two additional changes to section 142.22(b) are proposed in this document. It is proposed to amend section 142.22(b)(1) to clarify that the entry summary documents may be filed in any of the circumstances listed in section 142.21 except for merchandise released from warehouse under section 142.21(f). It is proposed to amend section 142.22(b)(2) to clarify that a withdrawal for consumption shall be filed only for merchandise released from warehouse under section 142.21(f).

INAPPLICABILITY OF EXECUTIVE ORDER 12044

This document is not subject to the provisions of the Treasury Department directive implementing Executive Order 12044, Improv-

ing Government Regulations, because T.D. 79–221, to which these amendments relate, was in process before May 22, 1978, the effective date of the directive. The proposal has been under extensive study by Customs, the International Trade Commission, and the Bureau of Census since T.D. 79–221 was published on August 19, 1979.

AUTHORITY

These amendments are proposed under the authority of R.S. 251, as amended (19 U.S.C. 66), sections 484, 552, 553, 557, 624, 46 Stat. 722, as amended, 742, as amended, 744, as amended, 759 (19 U.S.C. 1484, 1552, 1553, 1557, 1624); 92 Stat. 888 (Public Law 95–410, Oct. 3, 1978).

COMMENTS

Before adopting this proposal, consideration will be given to any written comments, preferably in triplicate, that are submitted timely to the Commissioner of Customs. Comments submitted will be available for public inspection in accordance with section 103.8(b), Customs Regulations (19 CFR 103.8(b)), during regular business hours at the Regulations and Research Division, Headquarters, U.S. Customs Service, 1301 Constitution Avenue NW., Room 2426, Washington, D.C. 20229.

DRAFTING INFORMATION

The principal author of this document was Charles D. Ressin, Regulations and Research Division, Office of Regulations and Rulings, U.S. Customs Service. However, personnel from other Customs offices participated in its development.

PROPOSED AMENDMENTS

It is proposed to amend Parts 132, 141, and 142, Customs Regulations (19 CFR 132, 141, 142), in the following manner:

PART 132—QUOTAS

1. It is proposed to amend the first sentence of section 132.13(a)(1)(ii) to read as follows:

132.13 Quotas after opening.

(a) *Procedure when nearing fulfillment.*

(1) *For release of merchandise.*

* * * * * * *

(ii) *Absolute.*—Except as provided for in sections 142.21(e)(2) and (g) of this chapter, absolute quota merchandise shall not be released under the immediate delivery procedure.

2. It is proposed to delete the last sentence of section 132.13(a)(1)(ii).

3. It is proposed to add a new paragraph 132.13(a)(1)(iii) to read as follows:

132.13 Quotas after opening.

(a) *Procedure when nearing fulfillment.*

(1) *For release of merchandise.*

* * * * * * *

(iii) *Quota Proration.*—When it is determined that entry summaries for consumption or withdrawals for consumption must be amended to permit only the quantity of tariff rate and absolute quota merchandise determined to be within the quota, the entry summaries for consumption or withdrawals for consumption must be returned to the importer for adjustment. The time of presentation for quota purposes in that event shall be the same as the time of the initial presentation of the entry summaries for consumption or withdrawals for consumption provided—

(A) An adjusted entry summary for consumption, or withdrawals for consumption, with estimated duties attached, is deposited within 5 working days after Headquarters authorizes release of the merchandise, and

(B) The importer takes delivery of the merchandise within 15 working days after release is authorized.

PART 141—ENTRY OF MERCHANDISE

1. It is proposed to amend section 141.61(e)(1)(i) to read as follows:

141.61 Completion of entry and entry summary documentation.

* * * * * * *

(e) *Statistical information.*

1. *Information required on entry summary or withdrawal form.*

(i) *Where form provides space.*

(A) *Single invoice.*—For each class or kind of merchandise subject to a separate statistical reporting number, the applicable information required by the General Statistical Headnotes, Tariff Schedules of the United States Annotated (TSUSA), shall be shown on the appraisement entry, Customs form 7500; the entry summary, Customs form 7501 or 7502; the transportation entry and manifest of goods, Customs form 7512, when used to document an incoming vessel shipment proceeding to a third country by means of an entry for transportation and exportation, or immediate exportation; the rewarehouse entry, Customs form 7519; the manufacturing warehouse entry, Customs form 7521; the withdrawal form, Customs form 7505 or

7506; or the record of vessel/aircraft foreign repair or equipment purchase, Customs form 226, in the space provided.

(B) *Multiple invoices.*—If a class or kind of merchandise from the same country of origin subject to the same statistical reporting number is included in more than one invoice, the importer may, at his option (1) list each invoice separately on the appropriate form listed under paragraph (e)(1)(i)(A) of this section and for each class or kind of merchandise within each invoice subject to a separate statistical reporting number, report the applicable information required by the General Statistical Headnotes, Tariff Schedules of the United States Annotated (TSUSA); or (2) combine the information for each class of merchandise and report it under one statistical reporting number for all invoices. When consolidating information from several invoices under one reporting number, a worksheet itemizing the entered value of the merchandise from each invoice in the manner prescribed in paragraph (f)(2)(ii) of this section shall be attached to the appropriate form.

2. It is proposed to amend section 141.61(f)(2) to read as follows:

(f) *Value of each invoice*

(1) * * *

(2) *Multiple invoices.*

(i) If the importer or his agent elects the first option specified in paragraph (e)(1)(i)(B) of this section, the information required to be restated by paragraph (f)(1) of this section for a single invoice shall be restated for each invoice. The required information shall be shown on a worksheet attached to the form or placed across columns (2a) or (2b) on Customs forms 7501 and 7502, and in the same general location on Customs forms 7505, 7506, 7519, and 7521.

(ii) If the importer or his agent elects the second option specified in paragraph (e)(1)(i)(B) of this section, the information required to be restated by paragraph (f)(1) of this section for a single invoice shall be restated for each invoice. The final amount in the summary computation shall represent the aggregate of the entered values of all the merchandise on each of the multiple invoices. The required information shall be shown on an attached worksheet.

(iii) The worksheet also shall contain:

(A) A statistical reporting number restatement for the merchandise from each invoice subject to the same statistical reporting number from the same country of origin, and

(B) An aggregate total value which represents the entered value.

(iv) To permit the identification of the merchandise entered under each reporting number, each class or kind of merchandise from one country reported under a single statistical reporting number shall be coded identically on each invoice and on the worksheet.

PART 142—ENTRY PROCESS

1. It is proposed to amend section 142.21(f) to read as follows:

142.21 Merchandise eligible for special permit for immediate delivery.

* * * * * * *

(f) *Release from warehouse followed by warehouse withdrawal for consumption.*

Merchandise may be released from warehouse under a special permit—

(1) At the discretion of the District Director when

(i) The warehouse is located a considerable distance from the customhouse and actual release of the merchandise from the warehouse could not be effected within the next full business day after the day of the payment of duty, and

(ii) The district has sufficient manpower to permit such practice;

(2) The importer shall have on file one of the types of Customs bonds provided for in section 142.4; and

(3) The immediate delivery permit shall be annotated to state that a warehouse withdrawal for consumption will be filed for this merchandise.

2. It is proposed to amend section 142.22(b) to read as follows:

142.22 Application for special permit for immediate delivery.

(a) * * *

(b) *Customs custody.*—Merchandise for which a special permit for immediate delivery has been issued under section 142.21 shall be considered to remain in Customs custody until the filing of one of the following:

(1) An entry summary for consumption, with estimated duties attached, an entry summary for warehouse, or an entry summary for entry under a temporary importation bond, which may be filed in any of the circumstances under section 142.21 of this part, except for merchandise released from warehouse under section 142.21(f);

(2) A withdrawal for consumption, with estimated duties attached, which shall be filed only for merchandise released from warehouse under section 142.21(f) of this part;

(3) An entry for transportation and exportation, immediate transportation without appraisement, or direct exportation, which shall be filed in those circumstances under sections 142.21 (b) and (e)(2); or entry for transportation and exportation, or direct exportation, which shall be filed in the circumstances under section 142.28 of this part; or

(4) An application to destroy, which shall be filed in those circumstances under sections 142.21 (b) and (e)(2), and section 142.28 of this part.

WILLIAM T. ARCHEY,
Acting Commissioner of Customs.

Approved: December 16, 1980.
RICHARD J. DAVIS,
Assistant Secretary of the Treasury.

[Published in the Federal Register, Dec. 30, 1980 (45 F.R. 85781)]

(19 CFR Part 18)

Transportation in Bond and Merchandise in Transit

Proposed Customs Regulations amendments relating to the assessment of liquidated damages under carrier's bonds

AGENCY: U.S. Customs Service, Department of the Treasury.

ACTION: Proposed rule.

SUMMARY: Bonded carriers are responsible for shortages, irregular deliveries, or nondeliveries of imported merchandise received by them to be transported from one port to another. In the case of any shortage, failure to deliver, or direct delivery to the consignee or other person of any duty-free merchandise, the bonded carrier is subject to a penalty imposed by Customs as liquidated damages in an amount equal to the value of the merchandise not to exceed $25 in any one shipment.

Customs has determined that the maximum penalty has failed to act as a deterrent to future violations and does not cover the administrative costs of processing the penalty. This document proposes to amend the Customs Regulations to increase the penalty to a minimum of $50 and a maximum of $100, in any one shipment, to be determined within the discretion of the District Director.

Bonded carriers are also responsible for any internal revenue taxes or other taxes due to the United States on the missing merchandise. While Customs duties are included in these taxes, they are not expressly mentioned. Accordingly, this document also proposes to include the term "duties" within the category of liabilities assumed by bonded carriers for shortage, nondelivery, or irregular delivery of merchandise.

DATE: Comments must be received on or before (60 days after publication in the Federal Register).

ADDRESS: Comments (preferably in triplicate) may be addressed to the Commissioner of Customs, Attention: Regulations and Research Division, U.S. Customs Service, 1301 Constitution Avenue NW., Room 2426, Washington, D.C. 20229.

FOR FURTHER INFORMATION CONTACT: Legal Aspects: William G. Rosoff, Carriers, Drawback and Bonds Division, 202–566–5856; Operational Aspects: Thomas Hargrove, Cargo Processing Division, 202–566–5354; U.S. Customs Service, 1301 Constitution Avenue NW., Washington, D.C. 20229.

SUPPLEMENTARY INFORMATION:

BACKGROUND

Generally, when merchandise is imported into the United States it must be entered for Customs purposes at the first port at which the merchandise arrives. However, under certain circumstances, imported merchandise may be placed in a Customs bonded warehouse or transported from the first port in the United States to another port. This procedure postpones final Customs formalities, including payment of duties due, until the merchandise arrives at the other port. The merchandise then may be entered, warehoused, or exported. In order to forward imported merchandise to another port, the merchandise must be transported in bond; that is certain Customs documents are required to support the movement and the carriers must be bonded by Customs for this purpose. Carriers bonded to transport merchandise in bond must follow certain procedures specified in part 18, Customs Regulations (19 CFR Part 18), and they will incur penalties if shipments together with the necessary documents, are not properly transported and delivered to Customs at the port of destination.

Section 18.10, Customs Regulations (19 CFR 18.10), lists five types of entries or withdrawals which may be made for merchandise to be transported in bond. Under section 18.8, Customs Regulations (19 CFR 18.8), carriers of merchandise transported in bond are responsible for any shortage, irregular delivery, or nondelivery at the port of destination or port of exit of bonded merchandise received by them. If there is a shortage, irregular delivery, or nondelivery, the bonded carrier is assessed liquidated damages under its bond. The amount of the liquidated damages depends on the dutiable status of the merchandise and the type of nonperformance by the carrier.

Section 18.8(b)(1), Customs Regulations (19 CFR 18.8(b)(1)), provides that if there is a shortage, irregular delivery, or nondelivery of duty-free merchandise, the penalty to be imposed as liquidated damages will be an amount equal to the value of the missing merchandise, not tc exceed $25 in any one shipment.

In addition to the penalties prescribed by section 18.8(b)(1), section 18.8(c), Customs Regulations (19 CFR 18.8(c)), provides that the bonded carrier is also responsible to pay any internal revenue taxes or other taxes owed to the United States on the missing merchan-

335-081 O - 81 - 3

dise, as well as all costs, charges, and expenses caused by the failure to make the required transportation, report, and delivery.

DISCUSSION

Customs has determined that the maximum amount of the penalty imposed as liquidated damages assessed against the carrier's bond for shortage, nondelivery, or irregular delivery of duty-free merchandise is insufficient to act as a deterrent to future violations. In addition, the $25 maximum penalty permitted under section 18.8(b)(1) does not nearly meet the administrative costs to Customs of processing claims for liquidated damages. In a study performed in the Houston, Tex., Customs region, it was concluded that the cost of processing the simplest liquidated damages case is $41.50. The cost to Customs has increased since that study was made.

Accordingly, Customs proposes to amend section 18.8(b)(1) to increase the amount of the liquidated damages that can be assessed to a minimum of $50 and maximum of $100, in any one shipment, to be determined within the discretion of the District Director.

Although the provisions of section 18.8(c) have been used to collect Customs duties under a carrier's bond on any missing merchandise, and the authority to collect duties under the carrier's bond has been recognized by the U.S. Customs Court in *Art Craft Jewelry Co.* v. *United States*, 64 Cust. Ct. 414, C.D. 4010 (1970), the term "duties" does not expressly appear in section 18.8(c). Accordingly, for purposes of clarity, Customs proposes to amend section 18.8(c) to expressly include the term "duties" among the liabilities imposed upon a carrier in the case of shortage, nondelivery, or irregular delivery of merchandise.

CUSTOMS FORMS

If this proposal is adopted, Customs forms 3587 (Carrier's Bond), 3588 (Private Carrier's Bond), and 3855 (Bond of Customs Cartman or Lighterman) would be revised to conform to the proposed amendments.

AUTHORITY

These amendments are proposed under the authority of R.S. 251, as amended, and sections 551, 623, 624, 46 Stat. 742, as amended, 759, as amended (19 U.S.C. 66, 1551, 1623, 1624).

COMMENTS

Before adopting this proposal, consideration will be given to any written comments, preferably in triplicate, submitted timely to the Commissioner of Customs. Comments submitted will be available for

public inspection in accordance with section 103.8(b), Customs Regulations (19 CFR 103.8(b)), during regular business hours at the Regulations and Research Division, Headquarters, U.S. Customs Service, 1301 Constitution Avenue NW., Room 2426, Washington, D.C. 20229.

APPLICABILITY OF EXECUTIVE ORDER 12044

This document is subject to the Treasury Department directive published in the Federal Register on November 8, 1978 (43 F.R. 52120), implementing Executive Order 12044, "Improving Government Regulations," and was the subject of Work Plan 79–11, approved by the Department on May 1, 1979.

In the directive, the Treasury Department stated that it considers each regulation or amendment to an existing regulation published in the Federal Register and codified in the Code of Federal Regulations to be significant.

However, regulations which are nonsubstantive, are essentially procedural, do not materially change existing or establish new policy, and do not impose substantial additional requirements or costs on, or substantially alter the legal rights or obligations of, those affected, with Secretarial approval, may be determined not to be significant. Accordingly, it has been determined that this proposal does not meet the criteria in the directive for significant regulations.

DRAFTING INFORMATION

The principal author of this document was Laurie Strassberg Amster, Regulations and Research Division, Office of Regulations and Rulings, U.S. Customs Service. However, personnel from other Customs offices participated in its development.

PROPOSED AMENDMENTS

It is proposed to amend section 18.8 (b)(1) and (c), Customs Regulations (19 CFR 18.8 (b)(1) and (c)), to read as follows:

18.8 Liability for shortage, irregular delivery, or nondelivery; penalties.

* * * * * * *

(b) Penalties imposed as liquidated damages under the carrier's bond for shortage, failure to deliver, or irregular delivery shall be as follows:

(1) In the case of shortage, failure to deliver, or delivery direct to the consignee or other person of any merchandise free of duty, a minimum of $50 and a maximum of $100, in any one shipment, to be determined within the discretion of the District Director.

* * * * * * *

(c) In addition to the penalties described in paragraph (b) of this section, the carrier shall pay any internal revenue taxes, duties, or other taxes accruing to the United States on the missing merchandise, together with all costs, charges, and expenses caused by the failure to make the required transportation, report, and delivery.

WILLIAM T. ARCHEY,
Acting Commissioner of Customs.

Approved: December 15, 1980.
RICHARD J. DAVIS,
Assistant Secretary of the Treasury.

[Published in the Federal Register, Dec. 30, 1980 (45 F.R. 85780)]

United States Court of International Trade

One Federal Plaza
New York, N.Y. 10007

Chief Judge

Edward D. Re

Paul P. Rao
Morgan Ford
Scovel Richardson
Frederick Landis
James L. Watson
Herbert N. Maletz
Bernard Newman
Nils A. Boe

Senior Judge

Samuel M. Rosenstein

Clerk

Joseph E. Lombardi

Decisions of the United States Court of International Trade

(Slip Op. 80–10)

ZENITH RADIO CORPORATION, PLAINTIFF *v.* UNITED STATES, DEFENDANT

Court No. 80–5–00861

Memorandum and Order On Plaintiff's Motion for a Preliminary Injuction

[Plaintiff's motion granted.]

(Dated December 9, 1980)

Frederick L. Ikenson and *Philip J. Curtis* on the brief for the plaintiff.

Alice Daniel, Assistant Attorney General (*David M. Cohen*, Director, Commercial Litigation Branch, on the brief), for the defendant.

MALETZ, Judge: Plaintiff, an American television manufacturer, moves for an order enjoining pendente lite the Secretary of Commerce, the Secretary of the Treasury, the Attorney General and the Commissioner of Customs, and their successors, agents, and assigns, from implementing the terms of any settlement agreement entered into by or on behalf of the U.S. Department of Commerce, the U.S. Department of the Treasury, the U.S. Department of Justice and/or the U.S. Customs Service, and various importers of television receivers from Japan subject to the Secretary of the Treasury's finding of dumping, T.D. 71–76 (1971).

By way of background, on May 28, 1980, plaintiff brought an action in this court under section 516A of the Tariff Act of 1930, as amended by the Trade Agreements Act of 1979 (19 U.S.C. 1516a(a)(2)) challenging certain settlement agreements into which the United States had entered on April 28, 1980 with various importers of television receivers from Japan. The major portion of these settlement agreements related to claims arising out of a large backlog of unliquidated entries.

On June 27, 1980, plaintiff filed a verified complaint in which it detailed its grievances and alleged that the implementation of the settlement agreements would result in the unlawful forgiveness to plaintiff's competitors of hundreds of millions of dollars in antidumping liability on these unliquidated entries. As a first cause of action, the complaint asserted that the settlement was not authorized by 19 U.S.C. 1617 and thus was ultra vires, illegal and void.

Alternatively, as a second cause of action, the complaint alleged that even assuming 19 U.S.C. 1617 provided authority for the settlement, the Government officials who recommended and determined that the claims should be settled acted arbitrarily, capriciously, in bad faith and unlawfully. More specifically, the complaint alleged that the recommendations and the decision to settle the claims as well as the terms of the settlement were based on bad faith and improper motivations of persons in the executive branch. According to the complaint, the recommendations and decisions to settle, and the terms of the settlement were based primarily on political and other irrelevant considerations.

Following enactment of the Customs Courts Act of 1980, which became effective on November 1, 1980, plaintiff filed an amended complaint in this court on November 3, 1980 under 28 U.S.C. 1581(c) (a provision which gives the court jurisdiction over actions commenced under section 516A of the Tariff Act of 1930, as amended (19 U.S.C. 1516a)). Alternatively, the amended complaint was brought under 28 U.S.C. 1581(i) (a provision which was added by the Customs

Courts Act of 1980 to grant broad residual jurisdictional authority to this court). It is undisputed that by virtue of section 1581(i), this court has jurisdiction to entertain this action.

It is important to add by way of further background that on May 8, 1980, the Court of Appeals for the District of Columbia Circuit in *The Committee to Preserve American Television* (a.k.a. *Compact*) v. *Miller*, C.A.D.C. No. 79–1948, issued an injunction pending appeal which is the same in substance as the preliminary injunction sought by plaintiff here. However, the enactment of the Customs Courts Act of 1980 makes imminent the dissolution by the D.C. Circuit of its injunction in view of the exclusivity of subject matter jurisdiction which Congress has now vested in this court. Indeed, the appellants in the *Compact* case have filed a motion with the D.C. Circuit to transfer that case to this court. The Government, on the other hand, opposes the motion to transfer and urges that the D.C. Circuit dissolve its injunction pending appeal. In this posture the injunction pending appeal could be dissolved by the D.C. Circuit at any time. Given that circumstance, plaintiff's motion in this court for a preliminary injunction is ripe for decision at this time.

Nor is there any question as to the power of this court to issue a preliminary injunction in appropriate circumstances. For the Customs Courts Act of 1980 vests this court—renamed the U.S. Court of International Trade—with "all the powers in law and equity of, or as conferred by statute upon, a district court of the United States." 28 U.S.C. 1585. Thus, the act specifically authorizes the court to issue injunctions. 28 U.S.C. 2643(c)(1). What is more, Congress intended "to grant the Court of International Trade remedial powers coextensive with those of a Federal district court. * * * [Therefore] [w]hen a party requests the court to grant injunctive relief, the court is to be guided by the same factors utilized by a Federal district court when it considers a request for a preliminary injunction." H. Rept. 96–1235, 96th Cong. 2d Sess. 61 (1980).

The factors utilized by district courts in considering a request for a preliminary injunction are set out in the leading case of *Virginia Petroleum Jobbers Association* v. *F.P.C.*, 259 F. 2d 921, 925 (D.C. Cir. 1958). There the court indicated that to prevail the petitioner must show (1) that there is a substantial likelihood that the petitioner will prevail on the merits; (2) that without the relief requested the petitioner will be irreparably injured; (3) that the issuance of the relief requested will not substantially harm other interested parties; and (4) that the public interest would be served by the relief requested.[1]

---

[1] See also, e.g., *Asher* v. *Laird*, 475 F. 2d 360, 362 (D.C. Cir. 1973); *Di Jub Leasing Corp.* v. *United States*, 1 CIT——, Slip Op. 80-9 at 15-16 (Dec. 5, 1980).

Recently, the D.C. Circuit in *Washington Metropolitan Area Transit Commission* v. *Holiday Tours, Inc.*, 559 F. 2d 841, 843 (D.C. Cir. 1977), amplified these factors as follows:

> * * * [U]nder *Virginia Petroleum Jobbers* a court, when confronted with a case in which the other three factors strongly favor interim relief may exercise its discretion to grant a stay if the movant has made a substantial case on the merits. The court is not required to find that ultimate success by the movant is a mathematical probability, and indeed, as in this case, may grant a stay even though its own approach may be contrary to movant's view of the merits. The necessary "level" or "degree" of possibility of success will vary according to the court's assessment of the other factors.

Applying the *Virginia Petroleum/Holiday Tours* test to the present case, we find the following:

1. *Likelihood that Plaintiff will Prevail on the Merits.*—The court has examined the record made in the case thus far, including the complaint; defendant's motion to dismiss for lack of jurisdiction and brief in support thereof; plaintiff's cross-motion for partial summary judgment on its first cause of action and its brief in support thereof and in opposition to defendant's motion to dismiss; defendant's cross-cross-motion for summary judgment and brief in support thereof and in opposition to plaintiff's motion for partial summary judgment; the amended complaint; and defendant's reply to plaintiff's opposition to defendant's motion to dismiss.[2] What is particularly significant is that several of the foregoing submissions set forth facts supported by accompanying exhibits with respect to the background of and circumstances surrounding the settlement agreements. Based on these facts which are largely uncontroverted, the court—without reference to plaintiff's first cause of action—is of the view that plaintiff has made out a substantial case on the merits on its alternative second cause of action alleging that Government officials in negotiating and executing the settlement agreements acted arbitrarily and in bad faith.

2. *Irreparable Injury to Plaintiff.*—The court is of the opinion that if appropriate Government officials are not enjoined from implementing the settlement agreements, plaintiff stands to be irreparably injured. For one thing, plaintiff will have lost its right to judicial review. For another, the settlement if implemented would result in the allegedly illegal forgiveness of liability for hundreds of millions of dollars in dumping duties to plaintiff's competitors.

Defendent argues though that plaintiff's competitive position is not currently affected in an adverse manner by the importation of television receivers from Japan. Hence, defendant's position is that plaintiff would not be harmed by nonenforcement of the

---

[2] In its reply to plaintiff's opposition to defendant's motion to dismiss, defendant agreed that by virtue of 28 U.S.C. 1581(i), as amended by the Customs Courts Act of 1980, the court has jurisdiction over the present action. Thus, defendant's motion to dismiss for lack of jurisdiction is now moot.

antidumping statutes with respect to past entries. However, Congress clearly recognized that domestic interests could be harmed by inadequate enforcement of the antidumping law with respect to past entries. This is evidenced by the administrative and judicial review made available by sections 751 and 516A of the Tariff Act of 1930, as amended (19 U.S.C. 1675, 1516a), which enable American manufacturers to contest the amount of duty to be assessed on past entries. Even the section 751 annual review which is now being conducted involving television receivers from Japan does not pertain to current entries. Rather, the current investigation relates to the amount of duties to be assessed on entries made between April 1, 1979 and March 1, 1980. In short, Congress recognized that domestic industry could be injured by the failure to enforce the antidumping law adequately and provided a vehicle to assure that domestic interests could participate in administrative and judicial review.

3. *The Effect on the Public Interest and on Third Parties.*— The defendant argues here—as it did in the Court of Appeals for the District of Columbia Circuit—that the enjoining of the settlement agreements would work a hardship on the public interest and third parties. Thus, the defendant states that the settlement agreements at issue were concluded on April 28, 1980, while the injunction pending appeal was not issued by the court of appeals until May 8, 1980. During the interim period, defendant states, Government agencies and private parties took a number of steps in reliance upon the agreements. Specifically, the Department of Justice caused the dismissal with prejudice of two collection suits.[3] Also, according to defendant, the Customs Service and the private parties to the agreements took unspecified steps also in reliance upon the agreements.

It is to be noted, however, that the parties to the agreements were obviously concerned that the agreements could come under legal attack. For the agreements contained the following provision:

> 8. This agreement shall be null and void in the event that there be, and upon, a judicial decision final by appeal or, if the time to appeal shall have expired without an appeal having been taken, that the United States did not have the right, power, or authority to enter into this agreement. Within 10 calendar days after such decision, the United States shall refund the consideration paid by the company, pursuant to paragraph 2 above. Nevertheless, if, at the time the agreement be finally declared null and void, the entries of television receivers subject to T.D. 71–76 made prior to April 1, 1979, have been liquidated or reliquidated with no assessment of antidumping duties, and such liquidations or reliquidations have become final or conclusive upon all persons, the applicable consideration paid by the company shall not be refunded.

[3] The dismissal of these two collection suits alone would not warrant the mooting of litigation challenging the legality of the settlement agreements, as apparently the Court of Appeals for the District of Columbia found.

Defendant proceeds to argue that unless the injunction is discontinued (and plaintiff's case is permitted to become moot), the settlement agreements might be repudiated. Such a development, defendant suggests, could lead to litigation with importers and "the diversion of substantial resources needed for the effective future enforcement of T.D. 71–76 into an effort to defend past actions." "The failure of this latter effort," defendant continues, "would result in the defeat of the very objective which plaintiff seeks to achieve—the payment of dumping duties by the importers of Japanese television sets during a substantial period of time—and the possible impairment of the effort to effectively enforce T D. 71–76 in the future."

In essence, defendant's position is that the public interest would be best served by mooting the present controversy. But this course, precluding as it would judicial inquiry into the Government's alleged failure to administer the antidumping law with respect to television receivers from Japan, would scarcely be consistent with the public interest. For the public interest lies in the faithful execution by the executive branch of the laws enacted by Congress. In this proceeding, plaintiff has raised serious issues concerning the executive branch's exercise of its responsibilities under the antidumping law with respect to television receivers from Japan. So considered, the mooting of this controversy, which is what would result in the absence of an injunction, would constitute a disservice to the public interest.

In view of the foregoing, it is hereby

Ordered that plaintiff's motion for a preliminary injunction is granted; and it is further

Ordered that the Secretary of Commerce, the Secretary of the Treasury, the Attorney General, and the Commissioner of Customs, and their successors, agents, and assigns are enjoined, pending the resolution of this case, from implementing the terms of any settlement agreement entered into by or on behalf of the U.S. Department of Commerce, the U.S. Department of the Treasury, the U.S. Department of Justice, and/or the U.S. Customs Service, and various importers of television receivers subject to T.D. 71–76; and it is further

Ordered that the Secretary of the Treasury and the Commissioner of Customs and their successors, agents, and assigns are enjoined, pending the resolution of this case, from liquidating any entries of television receivers subject to the finding of dumping, T.D. 71–76, which were entered, or withdrawn from warehouse, for consumption on or prior to March 31, 1979.

(Slip Op. 80–11)

ZENITH RADIO CORPORATION, PLAINTIFF *v.* UNITED STATES, DEFENDANT

Court No. 80–5–00861

Memorandum and Order on Defendant's Motion for a Protective Order

(Dated: December 12, 1980)

MALETZ, Judge: The court has before it defendant's second motion for an order relieving defendant of the obligation to respond to plaintiff's discovery, or, alternatively, to extend the time within which defendant must respond to plaintiff's discovery.

In considering this motion, the court has examined the record in the case thus far, including the complaint; defendant's motion to dismiss for lack of jurisdiction and brief in support thereof; plaintiff's cross-motion for partial summary judgment on its first cause of action and its brief in support thereof and in opposition to defendant's motion to dismiss; defendant's cross-cross-motion for summary judgment and brief in support thereof and in opposition to plaintiff's motion for partial summary judgment; the amended complaint; and defendant's reply to plaintiff's opposition to defendant's motion to dismiss.

On the basis of uncontroverted facts appearing in the above record (see *Zenith Radio Corporation* v. *United States*, 1 CIT——, Slip Op. 80–10 at 6–7, Dec. 9, 1980), the court has concluded that plaintiff has made a sufficiently strong showing of bad faith so as to warrant discovery. See *Citizens to Preserve Overton Park* v. *Volpe*, 401 U.S. 402, 420 (1971); *KFC National Management Corp.* v. *NLRB*, 497 F. 2d 298, 305 (2d Cir. 1974); *National Nutritional Foods Assn.* v. *FDA*, 491 F. 2d 1141, 1145 (2d Cir. 1974); *Singer Sewing Machine Co.* v. *NLRB*, 329 F. 2d 200, 208 (4th Cir. 1964); *Abbott Laboratories* v. *Harris*, 481 F. Supp. 74, 78 (N.D. Ill. 1979); *Tenneco Oil Co.* v. *Doe*, 475 F. Supp. 299, 316 (D. Del. 1979); *Quincy Oil Co., Inc.* v. *FEA*, 468 F. Supp. 383, 388 (D. Mass. 1979); *Ruppert* v. *Washington*, 366 F. Supp. 686, 690 (D.D.C 1973), *aff'd*, 543 F. 2d 417 (D.C. Cir. 1976); *Bank of Dearborn* v. *Saxon*, 244 F. Supp. 394, 402–403 (E.D. Mich. 1965); *Jarrott* v. *Scrivener*, 225 F. Supp. 827, 829 (D.D.C. 1964); *Union Savings Bank of Patchogue* v. *Saxon*, 209 F. Supp. 319 (D.D.C. 1962).

For the foregoing reasons it is hereby

Ordered that defendant's motion for an order relieving it of the obligation to respond to plaintiff's discovery is denied, and it is further

Ordered that defendant's motion in the alternative for an order extending the time within which it must respond to plaintiff's discovery is also denied, and it is further

Ordered that defendant shall respond to plaintiff's first request for production of documents within 40 days after December 15, 1980, and defendant shall respond to plaintiff's first interrogatories within 50 days after December 15, 1980.

(Slip Op. 80–12)

ZENITH RADIO CORPORATION, PLAINTIFF, *v.* UNITED STATES, DEFENDANT

Court No. 80–5–00861

Order

(Dated December 12, 1980)

MALETZ, Judge: Upon consideration of defendant's motion to dispense with the filing of an administrative record as defined in 28 U.S.C. 2635(b) or, in the alternative, for an extension of time within which to file that administrative record, and defendant's motion for an extension of time within which to file an administrative record as defined in 28 U.S.C. 2635(d), and upon plaintiff's memorandum in opposition thereto, and upon all other papers and proceedings had herein, and without determining the question as to whether the jurisdiction of the court in this proceeding is based on 28 U.S.C. 1581(c) or 28 U.S.C. 1581(i), it is hereby

Ordered that defendant's motions are denied, and it is further

Ordered that the Secretary of Commerce shall, within 40 days after December 15, 1980, transmit to the clerk of this court the full administrative record that was before the Secretary of Commerce at the time he made his decision which is the subject of the present proceeding before this court. See, e.g., *Citizens to Preserve Overton Park* v. *Volpe*, 401 U.S. 402, 420 (1971).

Decisions of the United States Court of International Trade

Abstracts

Abstracted Protest Decisions

DEPARTMENT OF THE TREASURY, *December 15, 1980.*

The following abstracts of decisions of the U.S. Court of International Trade at New York are published for the information and guidance of officers of the customs and others concerned. Although the decisions are not of sufficient general interest to print in full, the summary herein given will be of assistance to customs officials in easily locating cases and tracing important facts.

ROBERT E. CHASEN,
Commissioner of Customs.

DECISION NUMBER	JUDGE & DATE OF DECISION	PLAINTIFF	COURT NO.	ASSESSED	HELD	BASIS	ENTRY AND MERCHANDISE
				Par. or Item No. and Rate	Par. or Item No. and Rate		
P80/188	Ford, J. December 11, 1980	Spiegel, Inc.	77-4-00679, etc.	Items 380.84 and 382.81 25¢ per lb. + 27.5% Item 382.04 42.5%	Item 376.56 16.5%	H. Rosenthal Co. v. U.S. (C.D. 4709, aff'd C.A.D. 1236)	Chicago Jackets and snowsuits; garments designed for rainwear, etc.

Decisions of the United States Court of International Trade

Abstracts

Abstracted Reappraisement Decisions

DECISION NUMBER	JUDGE & DATE OF DECISION	PLAINTIFF	COURT NO.	BASIS OF VALUATION	HELD VALUE	BASIS	PORT OF ENTRY AND MERCHANDISE
R80/382	Newman, J. December 3, 1980	Trans Ocean Import Co., Inc.	297415-A, etc.	Export value	F.o.b. unit invoice prices plus 20% of difference between f.o.b. unit invoice prices and appraised values	Agreed statement of facts	New Orleans Wool hooked rugs, cotton tube mats
R80/383	Newman, J. December 8, 1980	Asiatic Import Co., Inc.	R61/19607	Export value	F.o.b. unit invoice prices plus 20% of difference between f.o.b. unit invoice prices and appraised values	Agreed statement of facts	Los Angeles Binoculars
R80/384	Newman, J. December 8, 1980	Bunge Corp.	293713-A, etc.	Export value	F.o.b. unit invoice prices plus 20% of difference between f.o.b. unit invoice prices and appraised values	Agreed statement of facts	New York Cotton hooked rugs, tube mats, etc.

R80/385	Newman, J. December 8, 1980	Bunge Corp.	R58/17224, etc.	Export value	F.o.b. unit invoice prices plus 20% of difference between f.o.b. unit invoice prices and appraised values	Agreed statement of facts	Baltimore Wool hooked rugs, etc.
R80/386	Newman, J. December 8, 1980	Bunge Corp.	R58/19317, etc.	Export value	F.o.b. unit invoice prices plus 20% of difference between f.o.b. unit invoice prices and appraised values	Agreed statement of facts	Seattle Wool hooked rugs
R80/387	Newman, J. December 8, 1980	Bunge Corp.	R59/5458, etc.	Export value	F.o.b. unit invoice prices plus 20% of difference between f.o.b. unit invoice prices and appraised values	Agreed statement of facts	Philadelphia Wool hooked rugs
R80/388	Newman, J. December 9, 1980	W. J. Byrnes & Co., a/c C & H Company	R58/19253, etc.	Export value	F.o.b. unit invoice prices plus 20% of difference between f.o.b. unit invoice prices and appraised values	Agreed statement of facts	Seattle Binoculars
R80/389	Newman, J. December 9, 1980	W. J. Byrnes & Co., a/c Island Imports, Inc.	R61/22287	Export value	F.o.b. unit invoice prices plus 20% of difference between f.o.b. unit invoice prices and appraised values	Agreed statement of facts	Seattle Binoculars
R80/390	Newman, J. December 9, 1980	Harold Leonard & Co., Inc.	R66/2838	Export value	F.o.b. unit invoice prices plus 20% of difference between f.o.b. unit invoice prices and appraised values	Agreed statement of facts	Los Angeles Cutlery

DECISION NUMBER	JUDGE & DATE OF DECISION	PLAINTIFF	COURT NO.	BASIS OF VALUATION	HELD VALUE	BASIS	PORT OF ENTRY AND MERCHANDISE
80/391	Newman, J. December 9, 1980	New York Merchandise Co., Inc.	R67/2568, etc.	Export value	F.o.b. unit invoice prices plus 20% of difference between f.o.b. unit invoice prices and appraised values	Agreed statement of facts	Los Angeles Batteries
R80/392	Newman, J. December 11, 1980	B & K Instruments, Inc.	R70/8243	Export value	Invoice unit prices less, where applicable, items specified on invoice as saved packing	Agreed statement of facts	Cleveland Instruments and parts
R80/393	Newman, J. December 11, 1980	Charmilles Corp. of America	79-3-00435	United States value	Determined by adding to f.o.b. unit invoice price in Swiss francs converted to a dollar value at fixed rate of exchange as shown on special Customs invoice in entry documents (the "claimed value"), 53% of difference between claimed value and appraised value	Agreed statement of facts	New York Machine tools and accessories and parts thereof

R80/394	Newman, J. December 11, 1980	Gehrig, Hoban & Co., Inc.	R70/5475, etc.	United States value	Determined by adding to f.o.b. unit invoice price in Swiss francs converted to a dollar value at rate of exchange in effect at time of entry (the "claimed value"), 53% of difference between claimed value and appraised value	Agreed statement of facts	New York Machine tools and accessories and parts thereof
R80/395	Newman, J. December 11, 1980	F. H. Kaysing	286455-A	Cost of production	As indicated in decision and judgment in British sterling, net, parcel post packing included, cases, if any, extra, and subject to any premium for extra sizes as shown on invoice	Charles Stockheimer et al. v. U.S. (C.A.D. 642)	Kansas City (St. Louis) Cashmere outerwear
R80/396	Re, C. J. December 12, 1980	Spartans Industries, Div. of Arlen Realty & Development Corp.	76-5-01102, etc.	Export value	Appraised values shown on entry papers less additions included to reflect currency revaluation	C.B.S. Imports Corp. v. U.S. (C.D. 4739)	New York Merchandise encompassed by entries shown on schedule attached to decision and judgment
R80/397	Re, C. J. December 12, 1980	Spartans Industries, Div. of Arlen Realty & Develop. Corp.	76-11-02554	Export value	Appraised values shown on entry papers less additions included to reflect currency revaluation	C.B.S. Imports Corp. v. U.S. (C.D. 4739)	Los Angeles Merchandise encompassed by entries shown on schedule attached to decision and judgment

DECISION NUMBER	JUDGE & DATE OF DECISION	PLAINTIFF	COURT NO.	BASIS OF VALUATION	HELD VALUE	BASIS	PORT OF ENTRY AND MERCHANDISE
R80/398	Re, C. J. December 12, 1980	Spartan Industries, Inc.	74-3-00692	Export value	Appraised values shown on entry papers less additions included to reflect currency revaluation	C.B.S. Imports Corp. v. U.S. (C.D. 4739)	Los Angeles Merchandise encompassed by entries shown on schedule attached to decision and judgment
R80/399	Re, C. J. December 12, 1980	Spartans Industries, Inc.	75-5-01394, etc.	Export value	Appraised values shown on entry papers less additions included to reflect currency revaluation	C.B.S. Imports Corp. v. U.S. (C.D. 4739)	Los Angeles Merchandise encompassed by entries shown on schedule attached to decision and judgment

Judgments of the United States Court of International Trade in Appealed Cases

DECEMBER 10, 1980

APPEAL 79-41.—United States *v.* Seagull Marine.—INFLATABLE LIFERAFTS—PNEUMATIC CRAFT—VESSELS EXEMPT FROM DUTY—TSUS—SUMMARY JUDGMENT.—C.D. 4814 reversed July 31, 1980 (C.A.D. 1251).

DECEMBER 12, 1980

APPEAL 79-28.—Mattel, Inc. *v.* United States.
APPEAL 79-29.—United States *v.* Mattel, Inc.
PHONOGRAPH RECORDS PACKAGED WITH TOY TELEPHONES—TOYS AND PARTS OF TOYS—PHONOGRAPH RECORDS—AMERICAN GOODS RETURNED—AMERICAN COMPONENTS OF ARTICLES ASSEMBLED ABROAD—FILING OF CLAIM-SUPPORTING DOCUMENTS—TSUS.—C.D. 4805 reversed June 19, 1980 (C.A.D. 1248), rehearing denied September 18, 1980.

International Trade Commission Notices

Investigations by the U.S. International Trade Commission

DEPARTMENT OF THE TREASURY,
December 24, 1980.

The appended notices relating to investigations by the U.S. International Trade Commission are published for the information of Customs officers and others concerned.

R. E. CHASEN,
Commissioner of Customs.

In the Matter of	
CERTAIN POULTRY DISK PICKING MACHINES AND COMPONENTS THEREOF	Investigation No. 337–TA–78

Notice of Commission Request For Public Comment

AGENCY: U.S. International Trade Commission.

ACTION: Request for public comment on the proposed termination of the investigation on the basis of the parties' settlement agreement.

SUMMARY: The complainant has filed a motion to terminate this investigation by reason of the parties' amicable settlement of all matters in controversy. In determining whether to grant the motion, the Commission must consider the effect that termination on the basis of the agreement would have upon the public.

SUPPLEMENTAL INFORMATION: This investigation was instituted on February 27, 1980 (45 F.R. 12932), following receipt of a complaint filed on behalf of Stork-Gamco, Inc., a manufacturer and distributor of poultry processing apparatus. The complaint, as amended, alleged the violation of section 337(a) of the Tariff Act of 1930 with respect to the importation into the United States and sale of certain poultry disk picking machines which are alleged to infringe claims 3, 6,

and 8 of U.S. Letters Patent 3,197,809. As the owner of the aforesaid patent, the complainant sought, an order excluding the allegedly infringing imports from entry into the United States. Two parties were named as respondents: Machinefabriek Meyn, B.V., a Dutch manufacturer and distributor of poultry processing apparatus, and Meyn, USA, Inc., the exclusive distributor of Meyn products in the United States.

Prior to and concurrently with the Commission's investigation, the parties had been engaged in a civil suit filed in District Court of the United States for the Northern District of Georgia. That case involved the same subject matter and allegations similar to those being investigated by the Commission, namely, patent validity, infringement, and misuse, antitrust violations, and damages. From March 3, 1980, through March 6, 1980, the court conducted a trial on the issues of patent validity and infringement. On March 7, 1980, the court ruled from the bench that U.S. Letters Patent 3,197,809 was valid and that the machines manufactured and sold by the respondents do not infringe claims 3, 6, and 8 of that patent.

Following issuance of the court's written decision on June 4, 1980, the complainant and the respondents entered a written settlement agreement providing that the complainant would not appeal the court's decision, that it would withdraw the complaint filed with the Commission in order to terminate the investigation, and that the complainant would not sue the respondents on any cause of action related thereto. The respondents in turn agreed not to file any counterclaim in the pending court case and not to sue the complainant on any related cause of action. The remaining provision of the agreement is that all parties agree that all matters in controversy before the court and before the Commission are settled and ended.

As a result of this agreement, the complainant filed a motion (Docket No. 78–3) on September 8, 1980, requesting termination of the Commission's investigation. The motion was signed by all parties, including the Commission investigative attorney, who also filed written comments in support of the motion. On September 12, 1980, the presiding officer issued a recommended determination that the investigation be terminated on the basis of the motion and the settlement agreement.

COMMENTS SOUGHT: Pursuant to its obligation to safeguard the public interest in the conduct of these proceedings, the Commission hereby requests written comments concerning the impact that termination on the basis of the agreement would have upon the public. The Commission is especially interested in receiving comments concerning the effect that the proposed termination would have on the public health and welfare, competitive conditions in the U.S. economy, the

production of articles which are like or are directly competitive with the poultry disk picking machines which are the subject of this investigation, and the U.S. consumers. Any person or organization may submit comments on the foregoing concerns as well as any other public interest factors which should be considered in connection with the proposed termination of this investigation.

INSTRUCTIONS FOR SUBMISSION: In order to receive Commission consideration, all comments must be submitted in writing. A signed original and 19 true copies of each submission must be filed with the Office of the Secretary, U.S. International Trade Commission, 701 E Street NW., room 156, Washington, D.C. 20436, within 30 days after the date on which this notice is published.

Any submission of information for which confidential treatment is desired shall be submitted separately from other documents. The envelope and all pages of such submissions must be clearly labeled confidential information. Requests for confidential treatment and all confidential submissions must conform to the requirements of section 201.6 of the Commission's Rules of Practice and Procedure (19 CFR 201.6).

ADDITIONAL INFORMATION: All written submissions (except for confidential information), the settlement agreement, and all other public documents on the record in this investigation, will be available for public inspection during official business hours (8:45 a.m. to 5:15 p.m.) at the Office of the Secretary, U.S. International Trade Commission, 701 E Street NW., room 156, Washington, D.C. 20436; telephone 202–523–0161.

FOR FURTHER INFORMATION CONTACT: Phyllis N. Smithey, Esq., Office of the General Counsel, U.S. International Trade Commission, 701 E Street NW., room 224, Washington, D.C. 20436; telephone 202–523–0321.

By order of the Commission.

Issued: December 11, 1980.

KENNETH R. MASON,
Secretary.

---

19 CFR Part 207 (Investigation No. 751–TA–3)

POTASSIUM CHLORIDE FROM CANADA

Notice of Investigation

AGENCY: U.S. International Trade Commission.

ACTION: Initiation of an investigation under section 751(b) of the Tariff Act of 1930.

SUMMARY: This action initiates an investigation under section 751(b) of the Tariff Act of 1930, 93 stat. 175 (to be codified at 19 U.S.C. 1675(b)), to determine whether changed circumstances exist which indicate that an industry in the United States would not be threatened with material injury if the antidumping finding concerning potassium chloride (provided for in item 480.50 of the Tariff Schedules of the United States (TSUS)) from Canada were revoked.

In November 1969, the Commission determined that an industry in the United States was being injured by reason of the importation from Canada of potassium chloride that was being, or was likely to be, sold at less than fair value within the meaning of the Antidumping Act, 1921. Sales by United States Borax & Chemical Co. were excluded from the Department of Treasury's determination of less than fair value (LTFV) sales in August 1969. Subsequent to Treasury's December 19, 1969 finding of dumping with respect to potassium chloride from Canada, the following companies have been excluded from the dumping finding after determinations by Treasury that sales of each of these firms have not been at LTFV and assurances from each firm that future sales of potassium chloride to the United States will not be made at LTFV: AMAX Potash Ltd.; Brockville Chemical Industries, Ltd.; Central Canada, Potash Co., Ltd.; Cominco, Ltd.; CF Industries, Inc.; Duval Corp. of Canada; Hudson Bay Mining & Smelting Co., Ltd; International Minerals & Chemical Corp.; Kalium Chemicals, Ltd.; Potash Company of America; Potash Company of Canada; Potash Company of Saskatchewan; Swift Canadian Co., Ltd. Revocation of the antidumping finding would not affect these assurances. An application for a review of the Commission's determination was filed with Commission by Texasgulf, Inc., on August 1, 1980. On the basis of the application, the Commission voted on December 11, 1980, to institute an investigation pursuant to section 751(b) of the Tariff Act of 1930 and section 207.45 of the Rules of Practice and Procedure (19 CFR 207.45).

DATE: The 120-day statutory period for this investigation began to run on December 11, 1980, the date of institution. The deadline for the Commission's determination is April 9, 1981.

FOR FURTHER INFORMATION CONTACT: Daniel F. Leahy, U.S. International Trade Commission; 202-523-1369.

SUPPLEMENTARY INFORMATION:

PROPOSED RULE CHANGE

Participants in the investigation should be aware that the Commission voted on August 6, 1980, to amend section 207.45 of the Rules of Practice and Procedure which implements section 751 of the Tariff

Act of 1930. The proposed revision was published for comment at 45 F.R. 54086 (Aug. 14, 1980). If the amended rule becomes final during the conduct of this investigation, it will have the effect of a change in the form of the Commission's determination in this investigation. In the event that the Commission were to adopt the proposed amendment, the Commission would determine whether an industry in the United States would be materially injured, or would be threatened with material injury, or the establishment of an industry in the United States would be materially retarded, by reason of imports of potassium chloride provided for in TSUS item 480.50 from Canada if the antidumping order were revoked.

PUBLIC HEARING

Any person with an interest in this investigation may request in writing that the Commission hold a public hearing in connection with this investigation. Any such request must be received by the Commission within 2 weeks of the date of publication of this notice of investigation in the Federal Register.

WRITTEN SUBMISSIONS

Any person may submit to the Commission on or before March 4, 1981, written statements of information pertinent to the subject matter of the investigation. A signed original and 19 true copies of such statements must be submitted.

Any business information which a submitter desires the Commission to treat as confidential shall be submitted separately and each sheet must be clearly marked at the top Confidential Business Data. Confidential submissions must conform with the requirements of section 201.6 of the Rules of Practice and Procedure (19 CFR 201.6). All written submissions except business confidential data, will be available for public inspection.

By order of the Commission.

Issued: December 12, 1980.

KENNETH R. MASON,
Secretary.

In the Matter of CERTAIN SLIDE FASTENER STRINGERS AND MACHINES AND COMPONENTS THEREOF FOR PRODUCING SUCH SLIDE FASTENER STRINGERS	Investigation No. 337–TA–85

Notice of Denial of Request for Temporary Relief

AGENCY: U.S. International Trade Commission.

ACTION: Disposition of complainant's request for temporary relief.

SUMMARY: On August 29, 1980, the Commission determined not to issue a temporary exclusion order in the above-captioned investigation. The Commission found that there is no reason to believe that there is a violation of section 337 of the Tariff Act of 1930 (19 U.S.C. 1337), and that the complainant would not suffer immediate and substantial harm in the absence of temporary relief. On November 10, 1980, the complainant petitioned the Commission to reconsider its denial of temporary relief in light of the Commission opinion issued in connection with the temporary relief phase of investigation No. 337–TA–89, certain apparatus for the continuous production of copper rod. The Commission reaffirmed its vote on November 26, 1980.

SUPPLEMENTARY INFORMATION: This investigation, under section 337 of the Tariff Act of 1930, was instituted by notice published in the Federal Register on June 4, 1980 (45 F.R. 40242). Textron, Inc. is the complainant in this investigation. Y.K.K. (U.S.A.) Inc. and Yoshida Kogyo K.K. were named party respondents.

The Commission's action and order, and the Commissioners' opinions issued in connection therewith are available for inspection in the Office of the Secretary, U.S. International Trade Commission, 701 E Street NW., Washington, D.C. 20436; telephone 202–523–0161.

FOR FURTHER INFORMATION CONTACT: Scott Daniels, Esq., Office of the General Counsel, U.S. International Trade Commission, 701 E Street NW., Washington, D.C. 20436; telephone 202–523–0480.

By order of the Commission.

Issued: December 16, 1980.

KENNETH R. MASON,
Secretary.

In the Matter of:	
CERTAIN HEADBOXES AND PAPERMAKING MACHINE FORMING SECTIONS FOR THE CONTINUOUS PRODUCTION OF PAPER, AND COMPONENTS THEREOF	Investigation No. 337–TA–82

Notice of Commission Order Approving Withdrawal of Motion to Amend the Complaint and Notice of Investigation and Denying Motion to Designate the Investigation More Complicated

AGENCY: U.S. International Trade Commission.

ACTION: Commission approval of the complainant's withdrawal of its motion to amend the complaint and notice of investigation and

denial of respondents' motion to designate the investigation more complicated.

SUMMARY: The complainant filed a memorandum withdrawing its motion (Docket No. 82–14) to amend the complaint and notice of investigation, following the presiding officer's recommendation that the investigation be designated more complicated if the motion to amend were granted. The Commission approved the complainant's withdrawal of its motion. On the basis of the aforesaid withdrawal, the Commission also denied respondents' motion (Docket No. 82–18) to designate the investigation more complicated.

ADDITIONAL INFORMATION: The Commission's action and order, as well as all other public documents on the record of this investigation, are available for public inspection during official working hours (8:45 a.m. to 5:15 p.m.) in the Office of the Secretary, U.S. International Trade Commission, 701 E Street NW., room 156, Washington, D.C. 20436; telephone 202–523–0161.

FOR FURTHER INFORMATION CONTACT: Phyllis N. Smithey, Esq., Office of the General Counsel, U.S. International Trade Commission, 701 E Street NW., room 224, Washington, D.C. 20436; telephone 202–523–0321.

By order of the Commission.

Issued: December 17, 1980.

KENNETH R. MASON,
Secretary.

In the Matter of CERTAIN APPARATUS FOR THE CONTINUOUS PRODUCTION OF COPPER ROD	Investigation No. 337–TA–89

Notice of Addition of Respondent

AGENCY: U.S. International Trade Commission.

ACTION: Addition of Phelps Dodge Industries, Inc. as a respondent.

SUMMARY: On December 17, 1980, the Commission voted to add Phelps Dodge Industries, Inc. as a respondent in the above-referenced investigation. The Commission also voted to deny motion 89–21 insofar as it requested that Phelps Dodge Corp., be dismissed as a respondent.

SUPPLEMENTARY INFORMATION: This investigation, under Section 337 of the Tariff Act of 1930, was instituted by notice published in the Federal Register on August 13, 1980 (45 F.R. 53923).

Southwire Co., of Carrolton, Ga., is a complainant in this investigation. Krupp GmbH of the Federal Republic of Germany, and Krupp International, Inc. of Harrison, N.Y., were named respondents. On October 23, 1980, the Commission voted to issue a temporary exclusion order, having found that there is reason to believe that section 337 is being violated, and voted to add Phelps Dodge Corp., as a respondent. On November 7, 1980, the Commission issued an action and order adding Phelps Dodge Corp., as a respondent.

FOR FURTHER INFORMATION CONTACT: Jeffrey Neeley, Esquire, Office of the General Counsel, U.S. International Trade Commission, 701 E Street, NW., Washington, D.C. 20436; telephone 202-523-0359.

By order of the Commission.

Issued: December 18, 1980.

KENNETH R. MASON,
Secretary.

Index

U.S. Customs Service

Treasury decisions:	T.D. No.
Customs regulations amended, section 162.47, waiver of bond requirements for property seized, etc	81-1
Foreign currencies:	
Daily certified rates; December 8-12, 1980	81-2
Rates which varied from quarterly rate; December 8-12, 1980	81-3

U.S. GOVERNMENT PRINTING OFFICE : 1981 O—335-081

DEPARTMENT OF THE TREASURY
U.S. CUSTOMS SERVICE
WASHINGTON, D.C. 20229

OFFICIAL BUSINESS
PENALTY FOR PRIVATE USE, $300

POSTAGE AND FEES PAID
DEPARTMENT OF THE TREASURY (CUSTOMS)
(TREAS. 552)

15/2

Customs Bulletin

Regulations, Rulings, Decisions, and Notices concerning Customs and related matters

and Decisions

of the United States Court of Customs and Patent Appeals and the United States Court of International Trade

Vol. 15 JANUARY 14, 1981 No. 2

NEWARK PUBLIC LIBRARY

FEB 17 1981

U. S. GOVT. PUBS.
DEPOSITORY 376

This issue contains

T.D. 81-4 through 81-6
Recent Unpublished Customs Service Decisions
Proposed Rulemaking
Erratum
Slip Op. 80-13 and 80-14
Reappraisment Abstracts R80/400 through R80/420
International Trade Commission Notices

THE DEPARTMENT OF THE TREASURY
U.S. Customs Service

T 1.11/3:

NOTICE

The abstracts, rulings, and notices which are issued weekly by the U.S. Customs Service are subject to correction for typographical or other printing errors. Users may notify the U.S. Customs Service, Logistics Management Division, Washington, D.C. 20229, of any such errors in order that corrections may be made before the bound volumes are published.

For sale by the Superintendent of Documents, U.S. Government Printing Office, Washington, D.C. 20402. Price: $2.25 (single copy domestic); $2.85 (single copy foreign). Subscription price: $85.00 a year domestic; $106.25 a year foreign.

U.S. Customs Service

Treasury Decision

(T.D. 81–4)

Bonds

Approval and discontinuance of Carriers Bonds, Customs Form 3587

Bonds of carriers for the transportation of bonded merchandise have been approved or discontinued as shown below. The symbol "D" indicates that the bond previously outstanding has been discontinued on the month, day, and year represented by the figures which follow. "PB" refers to a previous bond, dated as represented by figures in parentheses immediately following, which has been discontinued. If the previous bond was in the name of a different company or if the surety was different, the information is shown in a footnote at the end of the list.

Dated: December 23, 1980.

Name of principal and surety	Date of Bond	Date of approval	Filed with district director/area director/amount
Apollo Transports, Inc., P.O. Box 912, Austin, TX; motor carrier; St. Paul Fire & Marine Ins. Co. D 12/1/80	Aug. 31, 1979	Sept. 5, 1979	Houston, TX $25,000
De Betta & Sons Trucking Inc., (A New York Corp), P.O.B. 98, 115 Shinbone Lane, Comack, NY; motor carrier; Investors Ins. Co. of America	Nov. 5, 1980	Nov. 12, 1980	New York Seaport $25,000
Boston Freight Terminals, Inc., 31 Fargo St., South Boston, MA; motor carrier; American Employers' Ins. Co.	May 13, 1980	Dec. 4, 1980	Boston, MA $25,000
C.O.D.E., Inc., 4800 Colorado Blvd., Denver, CO; motor carrier; The Ohio Casualty Ins. Co. (PB 5/22/80) D 12/1/80 [1]	Nov. 17, 1980	Dec. 1, 1980	El Paso, TX $25,000
Carolina Cartage Co., Inc., P.O.B. 1075, Greenville, SC; motor carrier; Fireman's Fund Ins. Co. D 11/20/80	Oct. 16, 1973	Jan. 21, 1974	Charleston, SC $25,000
Deluxe Lines, Inc., P.O. Box 4921, Syracuse, NY; motor carrier; St. Paul Fire and Marine Ins. Co. D 12/15/80	Aug. 26, 1980	Sept. 16, 1980	Ogdensburg, NY $25,000

See footnotes at end of table.

Name of principal and surety	Date of Bond	Date of approval	Filed with district director/area director/amount
Direct Winters Transport Ltd., 890 Caledonia Rd., Toronto, Canada; motor carrier; Federal Ins. Co. D 11/17/80	Nov. 13, 1972	Dec. 1, 1972	Detroit, MI $50,000
Duncan Aviation, Inc., P.O. Box 81887, 2500 W. Benton, Lincoln, NB; air carrier; Aetna Casualty & Surety Co.	July 1, 1980	Nov. 24, 1980	Chicago, IL $50,000
Falcon Transport, Inc., P.O. Box K, Bird-In-Hand, PA; motor carrier; The Buckeye Union Ins. Co. (PB 8/14/78) D 11/15/80[2]	Nov. 1, 1980	Nov. 15, 1980	Buffalo, NY $25,000
Fox Transport S[illegible], 21 South Fifth St., Phila., PA; motor carrier; [illegible]erican Employers' Ins. Co. 12/3/80	Nov. 13, 1972	Nov. 13, 1972	New York Seaport $50,000
Frank M. Herbert Inc., 504 Raritan Center, Edison, NJ; motor carrier; American Druggists' Ins. Co. D 4/18/80	Nov. 1, 1977	Nov. 16, 1977	Newark, NJ $50,000
Gene Hummel T/A Humco, Inc., 106 E. Furnace Branch Rd., Suite T–C, Glen Burnie, MD; motor carrier; National Grange Mutual Ins. Co.	Nov. 12, 1980	Nov. 21, 1980	Baltimore, MD $25,000
The Inland Sea, Inc., 2021 W. Governors Circle, Ste. 100, Houston, TX; motor carrier; Federal Ins. Co.	Nov. 14, 1980	Nov. 17, 1980	Houston, TX $25,000
Merchants Forwarding Co., 30100 Telegraph Rd., Suite 324, Birmingham, MI; motor carrier; St. Paul Fire & Marine Ins. Co.	Oct. 24, 1980	Nov. 28, 1980	Detroit, MI $50,000
Nehalem Valley Motor Freight, Inc., 3641 N.W. St. Helens Rd.; Portland, OR; motor carrier; Peerless Ins. Co. D 12/2/80	Apr. 2, 1968	Apr. 18, 1968	Portland, OR $25,000
Seaport Transportation Corp., 312 W. End, Detroit, MI; motor carrier; St. Paul Fire & Marine Ins. Co.	Nov. 13, 1980	Nov. 13, 1980	Detroit, MI $50,000
Stevens Transport, 2944 Motley Dr., Suite 302, Mesquite, TX; motor carrier; Transamerica Ins. Co.	Oct. 8, 1980	Nov. 17, 1980	Dallas/Fort Worth, TX $25,000
Stewart Corp. d/b/a TransInternational System, 800 High St., POB 109, Worthington, OH; motor carrier; Washington International Ins. Co.	Nov. 10, 1980	Nov. 17, 1980	Cleveland, OH $50,000

[1] Surety is Protective Ins. Co.
[2] Surety is Pennsylvania National Mutual Casualty Ins. Co.

(BON–3–03)

MARILYN G. MORRISON,
(For Director,
Carriers, Drawback and Bonds Division).

(T.D. 81–5)

Foreign Currencies—Daily Rates For Countries Not on Quarterly List

Rates of exchange based on rates certified to the Secretary of the Treasury by the Federal Reserve Bank of New York for the Brazil cruzeiro, People's Republic of China yuan, Hong Kong dollar, Iran rial, Philippines peso, Singapore dollar, Thailand baht (tical), and Venezuela bolivar.

The Federal Reserve Bank of New York, pursuant to section 522(c), Tariff Act of 1930, as amended (31 U.S.C. 372 (c)), has certified buying rates for the dates and foreign currencies shown below. The rates of exchange, based on these buying rates, are published for the information and use of Customs officers and others concerned pursuant to part 159, subpart C, Customs Regulations (19 CFR 159, subpart C).

Brazil cruzeiro:	
December 15–19, 1980	$0. 0156
People's Republic of China yuan:	
December 15, 1980	$0. 637592
December 16, 1980	. 641437
December 17, 1980	. 637024
December 18, 1980	. 644039
December 19, 1980	. 635849
Hong Kong dollar:	
December 15, 1980	$0. 193911
December 16, 1980	. 192585
December 17, 1980	. 192623
December 18, 1980	. 194970
December 19, 1980	. 194401
Iran rial:	
December 15–19, 1980	Not Available
Philippines peso:	
December 15–19, 1980	$0. 1320
Singapore dollar:	
December 15, 1980	$0. 474158
December 16, 1980	. 469373
December 17, 1980	. 471587
December 18, 1980	. 472970
December 19, 1980	. 473485
Thailand baht (tical):	
December 15–19, 1980	$0. 0484
Venezuela bolivar:	
December 15–19, 1980	$0. 2329

(LIQ–3–01 O:C:E)

Dated: December 19, 1980.

GWENN KLEIN KIRSCHNER,
Acting Chief,
Customs Information Exchange.

(T.D. 81-6)

Foreign Currencies—Variances from Quarterly Rate

The following rates of exchange are based upon rates certified to the Secretary of the Treasury by the Federal Reserve Bank of New York, pursuant to section 522(c), Tariff Act of 1930, as amended (31 U.S.C. 372(c)), and reflect variances of 5 per centum or more from the quarterly rate published in T.D. 80-249 for the following countries. Therefore, as to entries covering merchandise exported on the dates listed, whenever it is necessary for Customs purposes to convert such currency into currency of the United States, conversion shall be at the following rates.

Austria schilling:	
December 15, 1980	$0.071582
December 16, 1980	.069979
December 17, 1980	.070447
December 18, 1980	.070746
December 19, 1980	.070721
Belgium franc:	
December 15, 1980	$0.031319
December 16, 1980	.030760
December 17-18, 1980	.031221
December 19, 1980	.031397
Denmark krone:	
December 15, 1980	$0.165017
December 16, 1980	.161786
December 17, 1980	.164339
December 18, 1980	.164204
December 19, 1980	.164366
Finland markka:	
December 15, 1980	$0.258799
December 16, 1980	.255363
December 17, 1980	.256345
December 18, 1980	.256246
December 19, 1980	.256641
France franc:	
December 15, 1980	$0.216216
December 16, 1980	.213950
December 17, 1980	.217746
December 18, 1980	.216685
December 19, 1990	.218055

Germany deutsche mark:	
December 15, 1980	$0.502513
December 16, 1980	.495417
December 17, 1980	.505433
December 18, 1980	.501756
December 19, 1980	.506714
Ireland pound:	
December 15, 1980	$1.8740
December 16, 1980	1.8460
December 17, 1980	1.8750
December 18, 1980	1.8720
December 19, 1980	1.8820
Italy lira:	
December 15, 1980	$0.001060
December 16, 1980	.001046
December 17, 1980	.001060
December 18, 1980	.001057
December 19, 1980	.001064
Netherlands guilder:	
December 15, 1980	$0.461894
December 16, 1980	.455996
December 17, 1980	.464792
December 18, 1980	.462214
December 19, 1980	.465658
Norway krone:	
December 15, 1980	$0.193705
December 16, 1980	.191241
December 17, 1980	.193274
December 18, 1980	.192493
December 19, 1980	.193686
Portugal escudo:	
December 15, 1980	$0.018762
December 16, 1980	.018536
December 17, 1980	.018570
December 18, 1980	.018605
December 19, 1980	.018622
Spain peseta:	
December 15, 1980	$0.012658
December 16, 1980	.012456
December 17, 1980	.012455
December 18, 1980	.012494
December 19, 1980	.012523

Sri Lanka rupee:	
December 15–18, 1980	$0. 056402
December 19, 1980	. 057045
Sweden krone:	
December 15, 1980	$0. 226116
December 16, 1980	. 223015
December 17, 1980	. 226449
December 18, 1980	. 225683
December 19, 1980	. 226655
Switzerland franc:	
December 15, 1980	$0. 552792
December 16, 1980	. 546299
December 17, 1980	. 554631
December 18, 1980	. 553403
December 19, 1980	. 555247

(LIQ-03-01 O:C:E)

Dated: December 19, 1980

GWENN KLEIN KIRSCHNER,
Acting Chief,
Customs Information Exchange.

Recent Unpublished Customs Service Decisions

The following listing of recent administrative decisions issued by the Office of Regulations and Rulings, U.S. Customs Service, and not otherwise published, is published for the information of Customs officers and the importing community. Although the decisions are not of sufficient general interest to warrant publication as Treasury Decisions, the listing describes the issues involved and is intended to aid Customs officers and concerned members of the public in identifying matters of interest which recently have been considered by the Office of Regulations and Rulings.

A copy of any decision included in this listing, identified by its date and file number, may be obtained in a form appropriate for public distribution upon written request to the Office of Regulations and Rulings—Attention: Legal Reference Area, Room 2404, U.S. Customs Service, 1301 Constitution Avenue NW., Washington, D.C. 20229. These copies will be made available at a cost to the requester of 10 cents per page. However, the Customs Service will waive this charge if the total number of pages copied is 10 or less.

Decisions listed in earlier issues of the CUSTOMS BULLETIN, through December 9, 1980, are available in microfiche format at a cost of $27.15 (15 cents per sheet of fiche). It is anticipated that additions to the microfiche will be made quarterly and subscriptions are available. Requests for the microfiche now available and for subscriptions should be directed to the Legal Reference Area. Subscribers will automatically receive updates as they are issued and will be billed accordingly.

B. JAMES FRITZ,
Director,
Regulations and Information Division.

Date of Decision	File Number	Issue
11–24–80	104415	Vessels: duties assessed against LASH barges for repairs performed in a foreign shipyard
12– 3–80	104803	Vessels: relief from duty under 19 U.S.C. 1466 on the cost of repairs to LASH barges arriving foreign
12– 3–80	104919	Containers: classification of plastic egg flats as instruments of international traffic
5– 9–80	061921	Classification: floor tiles (532.27, 532.91)
10–23–80	065176	Classification: toy vehicles (737.95)
10– 9–80	065181	Classification: toy cars, trucks and other vehicles (737.95, 737.15)
12– 1–80	065276	Classification: ornamented men's cotton corduroy pants (380.00)
10–30–80	066573	Classification: American Selling Price: footwear (700.60)
11–13–80	066670	Classification: knit scarf (372.70)
11–13–80	066777	Classification: foot valves and check valves (680.19, 680.14)
11–20–80	066865	Classification: alarm flashlight (688.45)
11–20–80	066905	Classification: Dibenzylidene sorbitol, DBS (406.40)

U.S. Customs Service

Proposed Rulemaking

Extension of Time for Comments Concerning Proposed Change of Practice Relating to the Classification of Three-Wheel All-Terrain Vehicles

AGENCY: U.S. Customs Service, Department of the Treasury.

ACTION: Notice of extension of time for comments.

SUMMARY: This document extends the period of time permitted for the submission of comments in response to the recent proposed change of practice relating to the classification of three-wheel all-terrain vehicles. This extension will permit the preparation and submission of more detailed comments by interested members of the public.

DATE: Comments must be received on or before February 27, 1981.

ADDRESS: Written comments (preferably in triplicate) should be addressed to the Commissioner of Customs, Attention: Regulations and Information Division, U.S. Customs Service, 1301 Constitution Avenue NW., room 2426, Washington, D.C. 20229.

FOR FURTHER INFORMATION CONTACT: James A. Seal, Classification and Value Division, U.S. Customs Service, 1301 Constitution Avenue NW., Washington, D.C. 20229; 202–566–5558.

SUPPLEMENTARY INFORMATION:

BACKGROUND

On November 28, 1980, the Customs Service published in the Federal Register (45 F.R. 79221), notice that the Service is reviewing a uniform and established practice concerning the classification of three-wheel all-terrain vehicles. The Customs Service currently classifies the subject vehicles under the provision for other motor vehicles (except motorcycles) for the transport of persons or articles in item 692.10, Tariff Schedules of the United States (TSUS). The proposed change of practice would result in the reclassification of these vehicles under the provisions for motorcycles in item 692.50 (TSUS).

COMMENTS

Customs has received a request from a motor vehicle manufacturer to extend the period of time for the submission of comments in order to prepare a more detailed response. Therefore, the period of time for submission of comments is extended to February 27, 1981.

Date: December 22, 1980.

DONALD W. LEWIS,
Director,
Office of Regulations and Rulings.

ERRATUM

Reference CUSTOMS BULLETIN, volume 14, No. 53, dated December 31, 1980:

Federal Register publishing information was omitted for T.D. 80–304, T.D. 80–305 and T.D. 80–306 on pages 7 and 8. The correct information should have appeared following each TD as follows:

[Published in the Federal Register, Dec. 24, 1980 (45 F.R. 85243)]

United States Court of International Trade

One Federal Plaza
New York, N.Y. 10007

Chief Judge

Edward D. Re

Judges

Paul P. Rao
Morgan Ford
Scovel Richardson
Fredrick Landis
James L. Watson
Herbert N. Maletz
Bernard Newman
Nils A. Boe

Senior Judge

Samuel M. Rosenstein

Clerk

Joseph E. Lombardi

Decision of the United States Court of International Trade

(Slip Op. 80–13)

WEAR ME APPAREL CORPORATION, PLAINTIFF *v.* THE UNITED STATES OF AMERICA, THE UNITED STATES CUSTOMS SERVICE, ROBERT E. CHASEN, DENNIS SNYDER, BENJAMIN JEFFERSON, ROY DEWING, JOHN MARTUGE, DEFENDANTS

Memorandum and Order on Plaintiff's Motion for a Preliminary Injunction

Court No. 80–11–00057

[Motion denied]

335-082 O - 81 - 2

(Dated December 15, 1980)

Rivkin Sherman & Levy, Esqs. (*Joseph S. Kaplan, Charles H. Bayar*, and *Dennis A. Adelson*, Esqs., of counsel), for the plaintiff.

Alice Daniel, Assistant Attorney General (*Joseph I. Liebman*, Attorney in Charge, Field Office for Customs Litigation, and *Jerry P. Wiskin*, trial attorney), for the defendants.

NEWMAN, Judge: This is an application by plaintiff, an importer of children's wearing apparel, for a preliminary injunction pursuant to rule 65(a) of the rules of this court brought on by an order to show cause entered on November 25, 1980. Plaintiff predicates jurisdiction in this action on 28 U.S.C. 1581(i) (3) and (4).

The merchandise involved comprises: (1) short sets, which are two-piece children's top and bottom combinations; and (2) children's trunks. This merchandise (manufactured in Taiwan) is subject to a quantitative textile quota restriction and must be entered by plaintiff under a correct unfilled quota category.

The substantive issue is the correct classification of the merchandise for quota purposes. Plaintiff claims that the merchandise is classifiable as swimwear or other wearing apparel in quota category 359 or 659, depending upon the component material of chief value; and further, that the short sets are classifiable as entireties rather than as separate components. On the merits, plaintiff additionally seeks a ruling that if its merchandise is ultimately determined not to be classifiable in quota category 359 or 659, as claimed, the proper classification as determined by the court be applied prospectively, and not retroactively.

Some of the merchandise has been imported and entered for consumption; some has been imported, but refused entry for consumption; some has been imported and entered for warehouse; and the remainder of plaintiff's merchandise is in transit to the United States or is still in Taiwan. Customs has demanded the redelivery of merchandise heretofore released for consumption, and has informally advised plaintiff that none of the merchandise in Customs bonded warehouse may be withdrawn for consumption.

Plaintiff seeks an order enjoining defendants from rejecting the entry, or withdrawal from warehouse, for consumption of plaintiff's merchandise in textile quota category 359 or 659; and enjoining defendants from requiring redelivery to Customs custody (or assessing liquidated damages for the failure to redeliver) any merchandise heretofore entered or withdrawn from warehouse for consumption and released to plaintiff.

On the merits, the Government disputes that the merchandise in issue falls within quota category 359 or 659 but it has not specifically addressed the question of whether the short sets are entireties.

Upon submission of this application on November 24, 1980, oral

argument was heard at a conference in Chambers on plaintiff's application for an order requiring defendants to show cause on November 26, 1980 why a preliminary injunction should not be granted. At this conference, the Government orally moved to dismiss the action on the ground that the court lacks jurisdiction. After hearing the arguments of counsel, this court ordered defendants to respond on November 26, 1980 to plaintiff's application for a preliminary injunction and set this matter down for a hearing on November 28, 1980. In furtherance of its oral motion to dismiss at the November 24 conference, the Government filed a written cross-motion to dismiss and a supporting memorandum of law on November 26, 1980. Plaintiff's response to defendants' cross-motion has not yet been filed.[1] Subsequently, on November 28 and December 1, 1980, an evidentiary hearing was held respecting plaintiff's application.

At that hearing, plaintiff adduced the testimony of its chairman of the board, president, and four other witnesses, and submitted six exhibits. The Government called one witness, an import specialist who is a team leader at the Port of Newark, N.J., and introduced two exhibits.

Inasmuch as the court desires to issue an expedited ruling on plaintiff's present application (as well as give precedence to other injunction applications in the motion part), the jurisdictional issue raised by defendants' cross-motion will not be specifically addressed at this juncture.

In addition to its opposition to plaintiff's application on jurisdictional grounds, defendants maintain that the application should be denied because of plaintiff's unjustified delay (laches) in seeking administrative review and plaintiff's failure to exhaust its administrative remedies in accordance with 28 U.S.C. 2637.

For the reasons indicated below, I am constrained to conclude that a preliminary injunction should not be granted under the circumstances in this case.

The salient facts as disclosed by the record, which warrant denial of plaintiff's application for injunctive relief, are:

(1) Plaintiff received notices to redeliver on March 31, 1980 and April 14, 1980, but filed no protest against such action.

(2) Plaintiff's merchandise was excluded from entry on August 22, 1980, but plaintiff filed no protest against such action.

(3) Plaintiff filed no protest until on or about November 19, 1980, against the exclusion of its merchandise from entry or delivery.

---

[1] Under rule 7(g) a motion to dismiss an action is a dispositive motion, and consequently pursuant to rule 7(d) plaintiff has 30 days after service of such motion in which to respond. Defendant then has 10 days after service of the response to its motion to serve a reply.

(4) Plaintiff has not availed itself of the accelerated methods of disposition of administrative claims provided by 19 U.S.C. 1515(b), 19 CFR § 174.21(b) and 19 CFR § 174.22.

Significantly, had plaintiff immediately filed a protest against the decision of August 22, 1980, excluding its merchandise from entry, plaintiff could have had, pursuant to 19 CFR § 174.21(b), an administrative review and a decision within 30 days from the date the protest was filed—long prior to the commencement of this action.

The bulk of the merchandise involved in this case was entered directly for warehouse; and, with certain exceptions, plaintiff has not attempted to withdraw such merchandise and enter it for consumption ostensibly because Customs has informally advised plaintiff that any attempted withdrawals would be rejected. Consequently, respecting the merchandise in bonded warehouse which plaintiff has not attempted to withdraw, there has been no formal administrative action taken by Customs, and accordingly there is no present cause of action relating to such merchandise. The foregoing observation also applies to plaintiff's merchandise still in production abroad, and that still in transit to the United States. *Cf. Sanho Collections, Ltd.* v. *Chasen, et al.*, 1 CIT__, Slip Op. 80–2 (November 14, 1980), wherein the Government (CITA) had taken official action to reduce the mport restraint level, which action was contestable by the plaintiff. Mere informal advice by Customs officials to plaintiff that the merchandise in warehouse would not be allowed withdrawal and entry for consumption under the existing visas (in category 359 or 659) is not administrative action which is protestable under 19 U.S.C. 1514, nor does such informal advice give rise to a cause of action over which this court may exercise jurisdiction pursuant to 28 U.S.C. 1581 (i) (3) and (4).

Concerning the merchandise which Customs has actually excluded from entry or which Customs has demanded be redelivered, plaintiff failed to exercise due diligence in pursuing its administrative remedies. See 28 U.S.C. 2637. I cannot fathom, and it is wholly inappropriate to speculate on, the reasons for plaintiff's inexplicable inaction and delay. While plaintiff, unfortunately, may have been lulled into the belief or hope that its quota classification dispute with Customs could be amicably resolved on an informal basis at the administrative level, plaintiff's contention that its informal efforts (including a request for internal advice) have exhausted its administrative remedies is patently without merit. More, the fact that plaintiff anticipated a formal rejection of its claimed classification by Customs is not a valid excuse for its lack of diligence in seeking administrative review. *United States* v. *Felt & Tarrant Co.*, 283 U.S. 269, 273 (1931).

The Court wishes to stress that its ruling herein should not be interpreted to mean that exhaustion of administrative remedies is invariably a condition precedent to granting preliminary injunctive

relief. Nonetheless, the legislative history of 28 U.S.C. 2643(*c*)(1) is clear that Congress was cognizant of the interrelationship between that provision and section 2637.[2] Importantly, Congress used the words where appropriate in section 2637(d).

Plaintiff's assertion that Customs demands for redelivery of merchandise were not pretestable under 19 U.S.C. 1514 is incorrect. Although the Customs Courts Act of 1980 amended section 1514(a)(4) to expressly make a demand for redelivery a protestable decision, a demand for redelivery is in reality no different than a decision to exclude merchandise from entry or delivery—a decision which the Customs Court may now [1979] review. See S. Rept. 96–466, 96th Cong., 1st sess. 7 (1979). Hence, demands for redelivery were protestable under 19 U.S.C. 1514(a)(4) prior to the 1980 amendment as decisions to exclude merchandise from entry or delivery.

The short of the matter is that from the facts and circumstances summarized above it is evident that the irreparable injury which plaintiff now claims it will suffer if denied preliminary injunctive relief was foreseeable as early as March 31, 1980, and in any event was readily apparent no later than August 22, 1980. The plaintiff, who has not acted diligently to pursue and exhaust its administrative remedies cannot, because of its financial predicament,[3] be permitted to benefit by its past inaction in pursuit of the present application. For plaintiff to prevail under the circumstances in this case would obviously make a mockery of section 2637. While this court is sympathetic to plaintiff's plight—particularly as vigorously asserted by its able and experienced counsel—regrettably the extraordinary relief here sought cannot be granted in the present application.

Government counsel has impressed upon the court in this and other similar matters that, when requested by an importer, the Customs Service will provide an expeditious review and determination of a protest. True it is, here plaintiff has never requested an accelerated administrative review. Nevertheless, should plaintiff at some point request an accelerated disposition of a protest, this court would anticipate that under the emergent circumstances established by the record, the Customs Service would do everything within its power to immediately review the protest and render a speedy decision.

For the reasons stated hereinabove, it is ordered that plaintiff's application for preliminary injunction be and hereby is denied.

---

[2] H.R. Rept. 96–1235, 96th Cong., 2d sess. at 41.

[3] At th evidentiary hearing held Nov. 28 and Dec. 1, 1980, plaintiff submitted extensive and unrebutted testimony through its chairman of the board and president concerning the dire financial consequences that would flow from a failure to obtain preliminary injunctive relief. Plaintiff's potentially precarious financial situation is also detailed in an affidavit by its president submitted in support of this application for preliminary injunction.

(Slip Op. 80–14)

MELAMINE CHEMICALS, INC., PLAINTIFF, *v.* UNITED STATES, DEFENDANT

Memorandum Opinion and Order

Court Nos. 80–6–00879, 80–6–00880

[Motion for protective order granted.]

(Dated December 18, 1980)

Baker & McKenzie (*Bruce E. Clubb* on the brief) for the plaintiff.
Alice Daniel, Assistant Attorney General; *David M. Cohen*, Director, Commercial Litigation Branch (*Francis J. Sailer* on the motion), for the defendant.

LANDIS, Judge: These actions were instituted pursuant to 19 U.S.C. 1516a(a)(2) seeking judicial review of a determination of no material injury or threat thereof published by the U.S. International Trade Commission on May 14, 1980, in antidumping investigation Nos. 731–TA–13 and 14 (final) of melamine in crystal form from Italy and Austria (45 F.R. 31830).

Pursuant to rule 6.1(c) [1] defendant moves for a protective order regarding document numbered 22 from list No. 2 of the administrative record.

Plaintiff opposes defendant's motion on the grounds that said motion is premature in that plaintiff has not requested disclosure of the document nor has plaintiff had the opportunity to evaluate thoroughly its potential importance.

The document was accorded privileged status during the administrative proceedings before the Commission.

Defendant contends that the document consists wholly of internal communications prepared by staff members of the Commission solely for use by the Commission which set forth and reflect advisory opinions, conclusions, considerations, deliberations and recommendations, and comprise part of the process by which the Commission's decisions are formulated and its official duties and responsibilities are discharged. The affidavit of Bill Alberger, Chairman of the U.S. International Trade Commission, is submitted in support of this motion and is not refuted by plaintiff.

It is well settled that documents of the International Trade Commission of a pro-con nature which are compiled solely for internal use by the Commission and which comprise part of the process and ideas by which, and upon which a final determination of the Commission is

[1] Now rule 26(c) of the Rules of the U.S. Court of International Trade.

based, are subject to a protective order against disclosure on the ground of privilege. *SCM Corporation* v. *United States*, 82 Cust. Ct. 351, C.R.D. 79–11, 473 F. Supp. 791 (1979); *Sprague Electric Company* v. *United States*, 81 Cust. Ct. 168, C.R.D. 78–18, 462 F. Supp. 966 (1978); *Henkel Corporation et al.* v. *United States*, 85 Cust. Ct. __, C.R.D. 80–15 (1980).

While executive privilege is not absolute except in cases of military or State secrets, *United States* v *Reynolds*, 345 U.S. 1 (1953); *SCM Corporation* v. *United States*, *supra*, nonetheless, once the proponent for the invocation of the privilege has complied with the established criteria for the privilege, it is incumbent upon the opposing party to show that the privileged material should be disclosed by demonstrating clearly and persuasively that the need for disclosure outweighs the harm that could result from nondisclosure. *United States* v. *Nixon*, 418 U.S. 683 (1974); *Sprague Electric Company* v. *United States*, *supra*.

In the present actions movant has complied with the established criteria by formally invoking the claim for privilege through the head of the agency having control of the matter and who personally reviewed the materials in issue and has submitted an appropriate affidavit in support of the privilege claim. In opposition, plaintiff has offered no compelling reasons to justify denial of the relief sought. Plaintiff has not refuted movant's supporting affidavit nor questioned the contents of the document [2] but merely states that it should not be forced to determine whether to request production of the document before it has had an opportunity to evaluate thoroughly its potential importance.

Plaintiff's argument relies upon the assumption that it must first demand production of the document before defendant can move for a protective order. In *Asahi Chemical Industry Company, Ltd., et al.* v. *United States*, 1 CIT __, Slip Op. 80–5 (November 20, 1980), this court held that a motion for a protective order, pursuant to rule 6.1(c),[3] may be made before the document is demanded to be disclosed. In the words of Judge Rao: "The plain language of the rule is to the effect that any party may move for a protective order and that the court may make any order which justice requires without any limitation as

[2] In view of the fact that plaintiff has offered no opposition to the Alberger affidavit nor questioned that the document is other than a pro-con statement, the court deems the facts contained therein as true. The court, therefore, finds it unnecessary to make an in camera inspection permitted pursuant to 19 U.S.C. 1516a (b)(2)(B) because there is no issue as to whether the document contains facts or other material not subject to executive privilege. *SCM Corporation* v. *United States*, *supra*.

[3] The principle is clearly enunciated under rule 26(c) of the rules of of the Court of International Trade. Under this rule the court, sua sponte, may issue orders as justice requires. Such order is without regard as to whether a demand has been made and, indeed, may be accomplished without a motion by the parties or person from whom discovery is sought.

to when a protective order may be granted." Accord, *Henkel Corporation et al.* v. *United States, supra.*

It is evident that once a motion for a protective order is made, those opposing said motion must evaluate the importance of the document in issue in making their opposition and must, once the movant has complied with the essential criteria for invoking a privilege claim, demonstrate a compelling need for the document that outweighs the harm that could result from protection. It is insufficient to defeat such motion by merely claiming that the party has not yet determined whether to request production of the document because it has not had an opportunity to evaluate the importance of the document. If additional time is necessary, the party should confer with counsel or petition the court for an extension of time for good cause shown to oppose the motion.

Accordingly, upon consideration of defendant's motion for a protective order regarding privileged document numbered 22, on list No. 2 in the administrative record, and plaintiff's opposition thereto, it is hereby

ORDERED and ADJUDGED that defendant's motion is, in all respects, granted and it is further

ORDERED and ADJUDGED that the clerk of the court shall seal document numbered 22 on list No. 2 and keep said document sealed and not subject to discovery or disclosure pending further order by the court.

Decisions of the United States Court of International Trade

Abstracts

Abstracted Reappraisement Decisions

DEPARTMENT OF THE TREASURY, *December 22, 1980.*

The following abstracts of decisions of the U.S. Court of International Trade at New York are published for the information and guidance of officers of the customs and others concerned. Although the decisions are not of sufficient general interest to print in full, the summary herein given will be of assistance to customs officials in easily locating cases and tracing important facts.

ROBERT E. CHASEN,
Commissioner of Customs.

DECISION NUMBER	JUDGE & DATE OF DECISION	PLAINTIFF	COURT NO.	BASIS OF VALUATION	HELD VALUE	BASIS	PORT OF ENTRY AND MERCHANDISE
R80/400	Re, C.J. December 15, 1980	Spartans Industries, Div. of Arlen Realty & Develop. Corp.	73-1-00217, etc.	Export value	Appraised values shown on entry papers less additions included to reflect currency revaluation	C.B.S. Imports Corp. v. U.S. (C.D. 4739)	New York Merchandise encompassed by entries shown on schedule attached to decision and judgment

DECISION NUMBER	JUDGE & DATE OF DECISION	PLAINTIFF	COURT NO.	BASIS OF VALUATION	HELD VALUE	BASIS	PORT OF ENTRY AND MERCHANDISE
R80/401	Re, C.J. December 15, 1980	Spartans Industries, Div. of Arlen Realty & Develop. Corp.	73-5-01127	Export value	Appraised values shown on entry papers less additions included to reflect currency revaluation	C.B.S. Imports Corp. v. U.S. (C.D. 4739)	Houston Merchandise encompassed by entries shown on schedule attached to decision and judgment
R80/402	Re, C.J. December 15, 1980	Spartans Industries, Div. of Arlen Realty & Develop. Corp.	73-6-01630, etc.	Export value	Appraised values shown on entry papers less additions included to reflect currency revaluation	C.B.S. Imports Corp. v. U.S. (C.D. 4739)	New York Merchandise encompassed by entries shown on schedule attached to decision and judgment
R80/403	Re, C.J. December 15, 1980	Spartans Industries, Div. of Arlen Realty & Develop. Corp.	73-7-01686	Export value	Appraised values shown on entry papers less additions included to reflect currency revaluation	C.B.S. Imports Corp. v. U.S. (C.D. 4739)	New York Merchandise encompassed by entries shown on schedule attached to decision and judgment
R80/404	Re, C.J. December 15, 1980	Spartans Industries, Div. of Arlen Realty & Develop. Corp.	73-11-03172	Export value	Appraised values shown on entry papers less additions included to reflect currency revaluation	C.B.S. Imports Corp. v. U.S. (C.D. 4739)	New York; Los Angeles Merchandise encompassed by entries shown on schedule attached to decision and judgment

R80/405	Re, C.J. December 15, 1980	Spartans Industries, Div. of Arlen Realty & Develop. Corp.	73-12-03494, etc.	Export value	Appraised values shown on entry papers less additions included to reflect currency revaluation	C.B.S. Imports Corp. v. U.S. (C.D. 4739)	New York Merchandise encompassed by entries shown on schedule attached to decision and judgment
R80/406	Re, C.J. December 15, 1980	Spartans Industries, Div. of Arlen Realty & Develop. Corp.	74-5-01320, etc.	Export value	Appraised values shown on entry papers less additions included to reflect currency revaluation	C.B.S. Imports Corp. v. U.S. (C.D. 4739)	Los Angeles Merchandise encompassed by entries shown on schedule attached to decision and judgment
R80/407	Re, C.J. December 15, 1980	Spartans Industries, Div. of Arlen Realty & Develop. Corp.	74-6-01530, etc.	Export value	Appraised values shown on entry papers less additions included to reflect currency revaluation	C.B.S. Imports Corp. v. U.S. (C.D. 4739)	New York Merchandise encompassed by entries shown on schedule attached to decision and judgment
R80/408	Re, C.J. December 15, 1980	Spartans Industries, Div. of Arlen Realty & Develop. Corp.	76-3-00784	Export value	Appraised values shown on entry papers less additions included to reflect currency revaluation	C.B.S. Imports Corp. v. U.S. (C.D. 4739)	Los Angeles Merchandise encompassed by entries shown on schedule attached to decision and judgment
R80/409	Re, C.J. December 16, 1980	Adorence Co., Inc.	75-5-01384, etc.	Export value	Appraised values shown on entry papers less additions included to reflect currency revaluation	C.B.S. Imports Corp. v. U.S. (C.D. 4739)	New York Merchandise encompassed by entries shown on schedule attached to decision and judgment

DECISION NUMBER	JUDGE & DATE OF DECISION	PLAINTIFF	COURT NO.	BASIS OF VALUATION	HELD VALUE	BASIS	PORT OF ENTRY AND MERCHANDISE
R80/410	Re, C.J. December 16, 1980	Amerex Trading Corp.	73-8-02381, etc.	Export value	Appraised values shown on entry papers less additions included to reflect currency revaluation	C.B.S. Imports Corp. v. U.S. (C.D. 4739)	New York Merchandise encompassed by entries shown on schedule attached to decision and judgment
R80/411	Re, C.J. December 16, 1980	Amerex Trading Corp.	73-10-02950	Export value	Appraised values shown on entry papers less additions included to reflect currency revaluation	C.B.S. Imports Corp. v. U.S. (C.D. 4739)	New York; Los Angeles Merchandise encompassed by entries shown on schedule attached to decision and judgment
R80/412	Re, C.J. December 16, 1980	Atlantic Department Stores	73-6-01510, etc.	Export value	Appraised values shown on entry papers less additions included to reflect currency revaluation	C.B.S. Imports Corp. v. U.S. (C.D. 4739)	New York Merchandise encompassed by entries shown on schedule attached to decision and judgment
R80/413	Re, C.J. December 16, 1980	Frederick Wholesale Corp.	74-1-00239, etc.	Export value	Appraised values shown on entry papers less additions included to reflect currency revaluation	C.B.S. Imports Corp. v. U.S. (C.D. 4739)	New York Merchandise encompassed by entries shown on schedule attached to decision and judgment
R80/414	Re, C.J. December 16, 1980	Korvettes, Division of Arlen Realty & Development Corp.	75-4-00986, etc.	Export value	Appraised values shown on entry papers less additions included to reflect currency revaluation	C.B.S. Imports Corp. v. U.S. (C.D. 4739)	New York Merchandise encompassed by entries shown on schedule attached to decision and judgment

R80/415	Re, C.J. December 17, 1980	Brown Boveri Corp.	76-7-01617, etc.	Export value	Appraised values shown on entry papers less additions included to reflect currency revaluation	C.B.S. Imports Corp. v. U.S. (C.D. 4739)	New Orleans Merchandise covered by entries enumerated on schedule attached to decision and judgment
R80/416	Re, C.J. December 17, 1980	Starlight Trading, Inc.	75-11-02796	Export value	Appraised values shown on entry papers less additions included to reflect currency revaluation	C.B.S. Imports Corp. v. U.S. (C.D. 4739)	New York Merchandise covered by entries enumerated on schedule attached to decision and judgment
R80/417	Watson, J. December 18, 1980	Ciba Chemical and Dye Company	R66/18308, etc.	United States value	U.S. selling prices, less 1% cash discount as determined by customs officer at time of appraisement; less 25.-7% representing profit and general expenses usually made in U.S. on sales of dyestuffs of same class or kind; less costs of transportation and insurance from place of shipment to place of delivery in amounts determined by customs officer at time of appraisement; divided by 1.40 or such other factor applied by customs officer, to allow for customs duties payable on imported dyestuffs	U.S. v. Geigy Chemical Corporation et al. (C.A.D. 1155)	New York Benzenoid dyestuffs

DECISION NUMBER	JUDGE & DATE OF DECISION	PLAINTIFF	COURT NO.	BASIS OF VALUATION	HELD VALUE	BASIS	PORT OF ENTRY AND MERCHANDISE
R80/418	Watson, J. December 18, 1980	Ciba Chemical and Dye Company	R67/1558	United States value	U.S. selling prices, less 1% cash discount as determined by customs officer at time of appraisement; less 25.3% representing profit and general expenses usually made in U.S. on sales of dyestuffs of same class or kind; less costs of transportation and insurance from place of shipment to place of delivery in amounts determined by customs officer at time of appraisement; divided by 1.40 or such other factor applied by customs officer, to allow for customs duties payable on imported dyestuffs	U.S. v. Geigy Chemical Corporation et al. (C.A.D. 1155)	New York Benzenoid dyestuffs
R80/419	Watson, J. December 18, 1980	Ciba Chemical and Dye Company	R70/2132	United States value	U.S. selling prices, less 1% cash discount as determined by customs officer at time of appraisement; less 31.1% representing profit and general expenses usually made in U.S. on sales of dyestuffs of same class or kind;	U.S. v. Geigy Chemical Corporation et al. (C.A.D. 1155)	New York Benzenoid dyestuffs

					less costs of transportation and insurance from place of shipment to place of delivery in amounts determined by customs officer at time of appraisement; divided by 1.40 or such other factor applied by customs officer, to allow for customs duties payable on imported dyestuffs		
R80/420	Watson, J. December 18, 1980	Geigy Chemical Corporation	R65/18434, etc.	United States value	U.S. selling prices, less 1% cash discount as determined by customs officer at time of appraisement; less 24.2% representing profit and general expenses usually made in U.S. on sales of dyestuffs of same class or kind; less costs of transportation and insurance from place of shipment to place of delivery in amounts determined by customs officer at time of appraisement; divided by 1.40 or such other factor applied by customs officer, to allow for customs duties payable on imported dyestuffs	U.S. v. Geigy Chemical Corporation et al. (C.A.D. 1155)	New York Benzenoid dyestuffs

International Trade Commission Notices

Investigations by the United States International Trade Commission

DEPARTMENT OF THE TREASURY, *January 14, 1980.*

The appended notices relating to investigations by the United States International Trade Commission are published for the information of Customs officers and others concerned.

R. E. CHASEN,
Commissioner of Customs.

In the Matter of CERTAIN UNIVERSAL JOINT KITS, COMPONENTS THEREOF, AND TRUNNION SEALS USED THEREWITH	Investigation No. 337–TA–93

Notice of Investigation

AGENCY: U.S. International Trade Commission.

ACTION: Institution of investigation pursuant to 19 U.S.C. 1337.

SUMMARY: Notice is hereby given that a complaint was filed with the U.S. International Trade Commission on November 3, 1980, under section 337 of the Tariff Act of 1930 (19 U.S.C. 1337), on behalf of Dana Corp., P.O. Box 1000, Toledo, Ohio 43697. The complaint was amended on November 18, 1980. The complaint, as amended (hereinafter referred to as the complaint), alleges unfair methods of competition and unfair acts in the importation into the United States of certain universal joint kits with trunnion seals, or in their sale, because of the alleged infringement by such trunnion seals of at least claims 1, 3, 4, 5, and 7 of U.S. Letters Patent 3,479,840 and the alleged misappropriation of Dana Corp.'s trade nomenclature. The complaint further alleges that the effect or tendency of such unfair methods of competition and unfair acts is to substantially injure an industry, efficiently and economically operated, in the United States.

The complainant requests the Commission to institute an investigation; during the investigation, to issue a temporary exclusion order

prohibiting importation of the articles in question into the United States, except under bond; and after a full investigation, to issue an order permanently excluding the articles in question from entry into the United States.

AUTHORITY: The authority for institution of this investigation is contained in section 337 of the Tariff Act of 1930 (19 U.S.C. 1337) and in section 210.12 of the Commission's Rules of Practice and Procedure (19 CFR 210.12).

SCOPE OF THE INVESTIGATION: Having considered the complaint, the U.S. International Trade Commission, on November 26, 1980, ordered that—

(1) Pursuant to subsection (b) of section 337 of the Tariff Act of 1930 (19 U.S.C. 1337(b)), an investigation be instituted to determine whether there is reason to believe there is a violation and whether there is a violation of subsection (a) of section 337 in the unlawful importation of certain universal joint kits, components thereof, and trunnion seals used therewith into the United States, or in their sale, because of the alleged infringement by such seals of claims 1, 3, 4, 5, or 7 of U.S. Letters Patent 3,479,840 and the alleged misappropriation of Dana Corp.'s trade nomenclature, the effect or tendency of which is to substantially injure an industry, efficiently and economically operated, in the United States;

(2) For the purpose of the investigation so instituted, the following are hereby named as parties upon which this notice of investigation shall be served:

(a) The complainant is:

Dana Corp.
P.O. Box 1000
Toledo, Ohio 43697

(b) The respondents are the following companies alleged to be engaged in the unlawful importation of such articles into the United States, or in their sale, and are parties upon which the complaint is to be served:

Naniwa Seimitsu Industry Co., Ltd.
No. 2—Chome, Kusune-Cho, Yao
Osaka, Japan

GMB Universal Joints, Inc.
22 D. Craigwood Road
Avenel, N.J. 07001

GMB West
121 Sierra Street
El Segundo, Calif. 90245

Kanematsu-Gosho (U.S.A.) Inc.
543 West Algonquin Road
Arlington Heights, Ill. 60005

(c) Wilhelm A. Zeitler, Chief, Nonpatent Branch, Unfair Import Investigations Division, U.S. International Trade Commission, 701 E Street NW., Washington, D.C. 20436,

shall name the Commission investigative attorney, a party to this investigation; and

(3) For the investigation so instituted, Donald K. Duvall, Chief Administrative Law Judge, U.S. International Trade Commission, 701 E Street NW., Washington, D.C. 20436, shall designate the presiding officer.

SUPPLEMENTARY INFORMATION: The phrase "components thereof" has been added to paragraph (1) above on the basis of informal investigatory activities by the Commission which revealed that the universal joint kit can be imported as component parts as well as in an assembled kit form.

Responses must be submitted by the named respondents in accordance with section 210.21 of the Commission's Rules of Practice and Procedure (19 CFR 210.21). Pursuant to sections 201.16(d) and 210.21(b) of the rules, such responses will be considered by the Commission if received not later than twenty (20) days after the date of service of the complaint. Extensions of time for submitting a response will not be granted unless good and sufficient cause therefor is shown.

Failure of a respondent to file a timely response to each allegation in the complaint and in this notice may be deemed to constitute a waiver of the right to appear and contest the allegations of the complaint and this notice, and to authorize the presiding officer and the Commission, without further notice to the respondent, to find the facts to be as alleged in the complaint and this notice and to enter both a recommended determination and a final determination containing such findings.

The complaint, except for any confidential information contained therein, is available for inspection during official working hours (8:45 a.m. to 5:15 p.m.) in the Office of the Secretary, U.S. International Trade Commission, 701 E Street NW., Washington, D.C. 20436, telephone 202–523–0161.

FOR FURTHER INFORMATION CONTACT: Jack Simmons, Esq., Office of the General Counsel, U.S. International Trade Commission, telephone 202–523–0493.

By order of the Commission.

Issued: December 17, 1980.

KENNETH R. MASON,
Secretary.

Notice of Investigation

U.S. Dye Industry: Its Competitiveness in the World Market

AGENCY: United States International Trade Commission

ACTION: In accordance with the provisions of section 332(b) of the Tariff Act of 1930 (19 U.S.C. 1332(b)), the Commission has instituted investigation No. 332–120 for the purpose of gathering and presenting information on the U.S. dye industry and its competitiveness in the world market. This study will assess the overall competitiveness of the U.S. dye industry relative to foreign producers through the analysis of such factors as trade trends, research and development expenditures, new products, and management achievement. Possible future trends will also be discussed and analyzed.

EFFECTIVE DATE: December 10, 1980.

FOR FURTHER INFORMATION CONTACT: Mr. Edmund Cappuccilli or Mr. William Baker, Energy and Chemicals Division, U.S. International Trade Commission, Washington, D.C. 20436; Phone 202–523–0490 or 202–523–0492.

WRITTEN SUBMISSIONS: There is no public hearing scheduled for this study, however, written submissions from interested parties are invited. Commercial or financial information which a party desires the Commission to treat as confidential must be submitted on separate sheets of paper, each clearly marked Confidential Business Information at the top. All submissions requesting confidential treatment must conform with the requirements of section 201.6 of the Commission's rules of practice and procedure (19 CFR 201.6). All written submissions, except for confidential business information, will be made available for inspection by interested persons. To be assured of consideration by the Commission in this study, written statements should be submitted at the earliest practicable date, but no later than April 17, 1981. All submissions should be addressed to the Secretary of the Commission's office in Washington, D.C.

By order of the Commission.

Issued: December 19, 1980.

KENNETH R. MASON
Secretary.

Index

U.S. Customs Service

Treasury Decisions:	T.D. No.
Carrier Bonds	81-4
Foreign currencies	
Daily certified rates; December 15–19, 1980	81-5
Rates which varied from quarterly rate; December 15–19, 1980	81-6

DEPARTMENT OF THE TREASURY
U.S. CUSTOMS SERVICE
WASHINGTON, D.C. 20229

OFFICIAL BUSINESS
PENALTY FOR PRIVATE USE, $300

POSTAGE AND FEES PAID
DEPARTMENT OF THE TREASURY (CUSTOMS)
(TREAS. 552)

U.S.MAIL

U.S. GOVERNMENT PRINTING OFFICE : 1981

15/3

Customs Bulletin

Regulations, Rulings, Decisions, and Notices concerning Customs and related matters

and Decisions

of the United States Court of Customs and Patent Appeals and the United States Court of International Trade

Vol. 15 JANUARY 21, 1981 No. 3

NEWARK PUBLIC LIBRARY

FEB 5 1981

U. S. GOVT. PUBS.
DEPOSITORY 576

This issue contains

T.D. 81–7 through 81–13
Proposed Rulemaking
Erratum
Reap. abstracts R80/421 through R80/434
International Trade Commission Notices

THE DEPARTMENT OF THE TREASURY
U.S. Customs Service

T1. 11/3:

NOTICE

The abstracts, rulings, and notices which are issued weekly by the U.S. Customs Service are subject to correction for typographical or other printing errors. Users may notify the U.S. Customs Service, Logistics Management Division, Washington, D.C. 20229, of any such errors in order that corrections may be made before the bound volumes are published.

For sale by the Superintendent of Documents, U.S. Government Printing Office, Washington, D.C. 20402. Price: $2.25 (single copy domestic); $2.85 (single copy foreign). Subscription price: $85.00 a year domestic; $106.25 a year foreign.

U.S. Customs Service

Treasury Decisions

(T.D. 81-7)

Valuation of Imported Merchandise for Customs Purposes—Customs Regulations Amended

Part 152, Customs Regulations, relating to classification and appraisement of merchandise, amended

TITLE 19—CUSTOMS DUTIES

CHAPTER I—U.S. CUSTOMS SERVICE

PART 152 —CLASSIFICATION AND APPRAISEMENT OF MERCHANDISE

AGENCY: U.S. Customs Service, Department of the Treasury.

ACTION: Final rule.

SUMMARY: This document amends the Customs Regulations to enable the Customs Service (Customs) to implement and administer the provisions of title II of Public Law 96-39, the Trade Agreements Act of 1979, relating to the valuation of imported merchandise for customs purposes.

The more significant changes are:

1. To eliminate section 402a, Tariff Act of 1930, as amended (19 U.S.C. 1402), the basis for appraising "Final List" articles.

2. To eliminate the "American Selling Price" basis for valuation.

3. To provide the following five bases—one primary and four secondary—for determining customs value:

a. Transaction value of the imported merchandise (the primary basis);

b. Transaction value of identical merchandise;

c. Transaction value of similar merchandise;

d. Deductive value; and

e. Computed value.

4. To provide that if Customs rejects the transaction value resulting in an increase in duties, the importer will be notified of the rejection, receive an explanation of the action, and be given 20 days in which to reply if in disagreement.

5. To provide that Customs, upon written request, shall furnish an importer with a written explanation of how the customs value of the imported merchandise was determined.

6. To provide that information submitted by an importer, buyer, or producer regarding the valuation of merchandise will not be rejected on the basis of the accounting method used to prepare the information if the preparation was in accordance with "generally accepted accounting principles."

The amendments are considered to be significant.

EFFECTIVE DATE: Upon publication in the Federal Register.

FOR FURTHER INFORMATION CONTACT: Thomas Lobred (202–566–2938) or Richard Rosettie (202–566–2790), Office of Commercial Operations, U.S. Customs Service, 1301 Constitution Avenue NW., Washington, D.C. 20229.

SUPPLEMENTARY INFORMATION:

BACKGROUND

Public Law 96–39 (93 Stat. 144), the "Trade Agreements Act of 1979," approved July 26, 1979 (the Act), incorporates into U.S. law the trade agreements negotiated by the United States in the Tokyo Round of Multilateral Trade Negotiations (MTN) and transmitted to the Congress by the President on June 19, 1979.

Title II of the act, "Customs Valuation," implements the Agreement on Implementation of Article VII of the General Agreement on Tariffs and Trade (the Agreement) relating to customs valuation. Title II makes significant changes in the laws administered by Customs relating to the valuation of imported merchandise.

The United States has entered into a supplementary agreement (protocol) on customs valuation which would eliminate one of the tests under the agreement, and title II, by which related parties can establish an acceptable transaction value, i.e., the use of the transaction value from unrelated parties' sales of identical goods from third countries (sec. 152.103(j)(2)(i)(C) of the NPRM). The legislation required to approve and implement the protocol to the trade agreement relating to customs valuation, Public Law 96–490, was enacted by the Congress and signed into law on December 2, 1980. In addition, the determination necessary for acceptance of the customs valuation agreement and the protocol to that agreement has been made by the U.S. Trade Representative and published in the Federal Register on December 24, 1980 (45 F.R. 85239). Accordingly, the aforementioned test has been deleted and other conforming changes have been made in the document.

EFFECTIVE DATES OF TITLE II

Presidential Proclamation No. 4768, of June 28, 1980, declares that the effective date for the provisions of title II, except those relating to certain rubber footwear, is July 1, 1980. The amendments made by section 223(b) of the act relating to certain rubber footwear will become effective on July 1, 1981.

Implementation of title II, the new value law, will neither repeal nor amend automatically sections 402 and 402a, Tariff Act of 1930, as amended (19 U.S.C. 1401a, 1402), with regard to merchandise exported to the United States before the respective effective dates.

The new value law will be applicable to merchandise exported to the United States on or after the applicable effective date, and the value will be determined in accordance with section 402, Tariff Act of 1930, as amended by section 201 of the act.

However, the old value law, sections 402 and 402a, Tariff Act of 1930, as amended, will apply to merchandise exported to the United States before the applicable effective date. This would include merchandise in a Customs bonded warehouse, in a foreign-trade zone, or in international transit to the United States before the applicable effective date. Accordingly, sections 10.18 and 10.19, Customs Regulations (19 CFR 10.18, 10.19), relating to the valuation of assembled articles and the elements involved in determining constructed value or cost of production for articles imported under item 807.00, Tariff Schedules of the United States (TSUS) (19 U.S.C. 1202), will be applicable only if the articles were exported to the United States before July 1, 1980.

NOTICE OF PROPOSED RULEMAKING (NPRM)

Because of the necessity to continue to administer the old value law for an indefinite period while it also implements the new value law, Customs published a NPRM in the Federal Register on March 31, 1980 (45 F.R. 20912). That document proposed to amend part 152, Customs Regulations (19 CFR part 152), concerning the classification and appraisement of merchandise to provide for a new subpart relating to the new value law while retaining the regulations relating to the old value law.

The preamble of that NPRM provided a detailed description of the specific changes in the valuation provisions administered by Customs and the background and purpose of the proposed regulations amendments and should be read in conjunction with this document.

The NPRM invited interested persons to submit comments on the amendments on or before May 30, 1980. As discussed below, consideration of the numerous comments received and further review of title II have resulted in a number of changes to the proposed amendments.

DISCUSSION OF COMMENTS

The following is a section-by-section analysis of the comments received, presented in ascending numerical order:

1. Section 152.101(c) Importer's option

Customs specifically solicited comments on this section relating to the importer's requesting the application of computed value before deductive value at the time the entry summary is filed. Many of the commenters responded to this issue, and all but one favored a time other than that of filing the entry summary (e.g., 20 days after filing the entry summary), to make the importer's election of the application of computed before deductive value.

Customs agrees that this is an important and legitimate concern. In order to provide the public the full benefit of this election, Customs considered a variety of proposals in addition to those specifically identified by commenters. Unfortunately, the only certain time which would be known to both Customs and the public other than the date of filing the entry summary is the date of liquidation. The date of liquidation usually is so remote from the importation of the merchandise and documentation of the entry as to be unacceptable.

However, Customs wishes to advise the public that if subsequent events or submissions demonstrate that this time frame creates a burden or establishes a pattern of importers being deprived of the statutory election, Customs would endeavor to make the appropriate modifications. In the interim, Customs will consider any workable suggestions from the public.

2. Section 152.101(d) Explanation to importer

A number of commenters suggested that the time period proposed for an importer to request an explanation of the valuation of the merchandise, (i.e., within 90 days from the date of liquidation of the entry), should be extended to permit the timely filing of a protest.

In this regard, the Statement of Administrative Action relating to Customs valuation, submitted to and approved by Congress along with the act, and the proposed regulations make clear that this explanation to the importer is separate from any present administrative procedures of Customs. This result is consistent with the overall design of title II of the act that appraisement be the result of consultation between the importer and Customs. As it was envisioned that such consultation would facilitate the determination of appraisements, there was no intent, nor any need, to tie the furnishing of a written explanation to the importer with the formal protest procedure set forth in part 174, Customs Regulations (19 CFR part 174). Consequently, to

make it clear that this procedure is not tied to the period for filing a protest, the time period has been adopted as proposed. It should be noted that the vast majority of persons who might file a protest would have previously been informed under proposed section 152.103 (m) of the grounds for rejection of transaction value.

In addition, several commenters suggested that section 152.101(d) be reworded to emphasize more strongly the confidentiality of information Customs receives from the public. Customs thinks that the last sentence in the proposed section makes the point adequately, as does present part 103, Customs Regulations (19 CFR part 103).

3. Section 152.102(a) Assist

Some commenters requested that the definition of "assist" contain the limitation that research and development costs for tools, molds, etc., undertaken in the United States not be dutiable.

As this suggestion is contrary to both the Statement of Administrative Action and the act, we have no authority to adopt it.

4. Section 152.102(b) Commission

A number of commenters pointed out that Customs treatment of buying and selling commissions was not only confusing but contrary to the language of the act.

While the language contained in the proposed regulation is consistent with the act, Customs believes that the point raised is valid. Therefore, section 152.102(b) has been revised by deleting all reference to "buying commission," a term not mentioned in the act, and substituting the following definition of "selling commission": "Selling commission" means any commission paid to the seller's agent, who is related to or controlled by, or works for or on behalf of, the manufacturer or the seller.

5. Section 152.102(c) Generally accepted accounting principles

Several commenters recommended that the section indicate that the concept of generally accepted accounting principles is not limited to those principles practiced in the United States.

Customs agrees, and a phrase has been added to subparagraph (2) of the definition to include that recommendation.

6. Section 152.102(e) Packing costs

Several commenters wanted the section to specify that the cost of containers and other instruments of international traffic is not included in packing costs.

As that concept is not a new element created by the act, and is currently stated in the Statement of Administrative Action, Customs has adopted that suggestion.

7. Section 152.102(g) Related persons

One of the commenters suggested that Customs change the term "partners" in the section to the phrase "legally recognized partners in business."

The language contained in proposed section 152.102(g) is taken from the act. Further, Customs thinks that the term "partners" means the same under U.S. law as the phrase "legally recognized partners in business." Accordingly, the requested change has not been adopted.

8. Section 152.103(a)(2) Indirect payment

Several commenters suggested breaking this section into two paragraphs to illustrate a dichotomy between advertising which is not considered an indirect payment (an exception) as opposed to indirect payments in general.

The section is meant to discuss indirect payments generally, and to emphasize that advertising undertaken by the buyer is not considered to be an indirect payment. Customs does not think another paragraph with a heading of "advertising" would lend more emphasis to the declaratory statement made, and has not adopted the suggestion.

9. Section 152.103(a)(3) Assembled merchandise

In response to many comments seeking specific clarification of this section, three examples have been added which should be helpful in illustrating the meaning of the section.

10. Section 152.102(a)(4) Rebate

Several commenters pointed out that this section appeared to restrict Customs treatment of defective merchandise.

Customs has no such intent, and defective merchandise still will be accorded treatment under the provisions of section 158.12, Customs Regulations (19 CFR 158.12), relating to merchandise partially damaged at the time of importation.

Several commenters also suggested that the second example appearing after this section include the correct answer in numercial form. This suggestion has been adopted and the example modified accordingly.

11. New section 152.103(a)(5) Foreign inland freight

Based upon comments received concerning the dutiability of foreign inland freight, a new section has been added to state that foreign inland freight charges will be dutiable to the extent they are included in the price actually paid or payable for the imported merchandise.

12. Section 152.103(e) Apportionment

A commenter suggested that Customs modify the interpretative note following this section to reflect "generally accepted accounting principles."

As this suggestion has merit, the interpretative note has been modified to reflect that the correctness of any numerical figure the importer asks Customs to apportion will be used as long as that figure is in accordance with "generally accepted accounting principles."

13. Section 152.103(f) Royalties or license fees

It was requested that Customs expand this section to include the language of the House report relating to royalties.

The language in this section tracks that contained in the Statement of Administrative Action. The explanatory language contained in the House report would be very difficult to transform into regulation and, in definitive terms, would add little or nothing over that set forth in section 152.103(f). Accordingly, Customs has not adopted the request.

Several commenters suggested deletion of the world "unrelated" which appears in the example following this section, as unnecessary.

Although Customs agrees that it is not required in all cases that the buyer be unrelated to the seller, it would be a relevant factor in some cases. Therefore, the language of that example has not been modified.

14. Section 152.103(l)(1) Validation of transaction

Several commenters noted that the example following the interpretative notes in this section was confusing. To avoid any possible confusion, appropriate modifications have been made.

15. Section 152.103(1)(2)(i) Test values

A commenter suggested that the word "are" in the second sentence of the section should be changed to "include" to correspond to the language in the Statement of Administrative Action. Customs agrees and has made the appropriate change.

16. Section 152.103(m) Rejection of transaction value

Many commenters suggested extending the time period provided in the proposed section so that an importer would have more than 20 days to respond to the district director if in disagreement with Customs grounds for rejecting transaction value as the basis of appraisement for the imported merchandise.

The time period proposed is the same as that now provided in section 152.2, Customs Regulations (19 CFR 152.2), relating to notification to importers of increased duties. Long experience with section 152.2 has demonstrated that this timeframe works. Additionally, Customs would point out that several avenues exist for presentation of conflicting views to headquarters for resolution.

17. Section 152.105(c)(3) Prices; "further processing"

Many commenters responded to Customs specific request for comments on the time of the importer's election of the further processing

335-083 O - 81 - 2

method of price appraisal under deductive value. The commenters unanimously urged a time period for the election considerably later than that of the time of filing the entry summary with Customs.

For the same reasons given in the discussion of the importer's option provided in section 152.101(c), Customs is unable to make the requested change.

However, Customs wishes to advise the public that if subsequent events or submissions demonstrate that this timeframe creates a burden or establishes a pattern of importers being deprived of the statutory election, Customs would endeavor to make the appropriate modifications. In the interim, Customs will consider any workable suggestions from the public.

One commenter wanted Customs to define the term "further processing" for purposes of this section. As there is no intent on Customs part to establish any other than the ordinary commercial meaning of that term, it would not be appropriate to delineate a precise meaning within the valuation context alone. Moreover, any consideration of the applicability of this section will be determined on a case-by-case basis.

18. Section 152.107 Value if other values cannot be determined or used

A commenter suggested that this section contain an additional paragraph stating that the time for consideration of the appraisal under deductive value of a price applicable to merchandise which has undergone further processing could be extended beyond the 180 days specified in the proposal. It was suggested that the paragraph could be similar to that proposed in section 152.107(c) concerning the flexible administration of the 90 days sales requirement for merchandise sold in the condition as imported but not sold at or about the date of the appraised merchandise.

Customs cannot adopt the suggestion because (1) the three paragraphs in the proposed section are taken from the provisions of the Valuation Code acceded to by the United States and forming the basis for title II of the act (there being no provision for flexible administration of the 180-day period), and (2) because of the 1-year limit for liquidation of entries, any extension of the 6-month period would lead to predictable difficulties for both Customs and importers.

ADDITIONAL COMMENTS

One commenter suggested that all procedural requirements to implement the provisions of title II be placed in a separate section of the regulations.

Customs thinks this suggestion has merit; however, it was felt that the spirit of the law, that is, closer cooperation between Customs and the importing community, would be accommodated better if proce-

dural requirements were interspersed among the substantive provisions wherever possible.

Several commenters requested that, in cases where either deductive or computed value is applicable because no identical or similar merchandise exists, Customs always accept the importer's cost figures without considering, where appropriate, goods of the same class or kind.

Customs cannot accept this request because it is contrary to the language of the act.

Several commenters expressed concern about the effect of the proposed regulations on existing sections 10.18 and 10.19, Customs Regulations (19 CFR 10.18, 10.19), relating to the valuation of assembled articles and the elements involved in determining constructed value or cost of production under the old value law.

Customs has included a statement in the portion of this document designated "Effective Dates of Title II" to clarify that those sections will apply only to appraisement of merchandise exported to the United States before July 1, 1980, the general effective date of the act.

Two commenters noted that it is very expensive and time-consuming to require the keeping and furnishing of assist data on duty-free merchandise specifically for Customs purposes when such information has no practical use under the act.

Customs agrees that maintenance of records relating to dutiable assists which are then not applicable to clearly duty-free merchandise, could be burdensome, and the need for maintenance of those records will be scrutinized by Customs on a case-by-case basis.

Finally, Customs notes that a number of comments received were outside the scope of the proposed regulation, that is ,they were not concerned with customs valuation. Therefore, it would not be appropriate to deal with them in the context of this document. Included in this group would be those comments concerning the Special Customs Invoice (Customs Form 5515) and matters of tariff classification, e.g., comments addressing the classification of intangibles such as software and other intellectual properties, classification under item 807.00, TSUS, and the use of tariff classification breakdowns to determine "same class or kind".

EDITORIAL CHANGES

Upon its own review, Customs has made other nonsubstantive changes in the proposed amendments. Those changes, in addition to the correction of typographical errors and other minor editorial corrections, are listed below by affected section:

1. Section 152.101(d) has been revised by adding the word "after" to the first sentence, immediately following the phrase "within 90 days," and striking the word "of" preceding "liquidation".

2. Section 152.103(a)(4) has been modified by adding an example for clarification relating to cash discounts.

3. Section 152.103(d)(2), example 1, is too broad in scope. Customs has modified the answer to that example to cover situations in which design work undertaken in the United States is part of the price actually paid or payable for the imported merchandise, and as such, is dutiable. In that circumstance, those charges are dutiable because there is no authority in the act for a deduction from the price actually paid or payable.

4. Section 152.103(f) has been revised by adding the phrase "to a third party" after the word "buyer" in the last sentence of the section. This change is consistent with the Statement of Administrative Action and was omitted from the proposal inadvertently.

INAPPLICABILITY OF DELAYED EFFECTIVE DATE PROVISION

Because these final amendments, having been subject to notice and public procedure requirements, implement the valuation provisions of Public Law 96–39, the Trade Agreements Act of 1979, which provisions generally became effective July 1, 1980, it is found that good cause exists, under 5 U.S.C. 553(d)(3), to dispense with a delayed effective date.

DRAFTING INFORMATION

The principal author of this document was Todd J. Schneider, Regulations and Research Division, Office of Regualtions and Rulings, U.S. Customs Service. However, personnel from other Customs offices participated in its development.

AMENDMENT TO THE REGULATIONS

To reflect these changes, part 152, Customs Regulations (19 CFR part 152), is amended as set forth below.

R. E. CHASEN,
Commissioner of Customs.

Approved: December 12, 1980.

RICHARD J. DAVIS,
Assistant Secretary of the Treasury.

PART 152—CLASSIFICATION AND APPRAISEMENT OF MERCHANDISE

1. Part 152 is amended by adding a new section 152.20 to read as follows:

§ *152.20 Effective date.*

The value for appraisement of merchandise exported to the United States before July 1, 1980, or, for articles classified in item 700.60,

Tariff Schedules of the United States (19 U.S.C. 1202), before July 1, 1981, will be determined in accordance with this subpart.

2. Part 152 is amended by adding a new Subpart E, Valuation of Merchandise, to read as follows:

SUBPART E—VALUATION OF MERCHANDISE

Sec.

152.100 Interpretative notes.
152.101 Basis of appraisement.
152.102 Definitions.
152.103 Transaction value.
152.104 Transaction value of identical merchandise and similar merchandise.
152.105 Deductive value.
152.106 Computed value.
152.107 Value if other values cannot be determined or used.
152.108 Unacceptable bases of appraisement.

Authority: R.S. 251, as amended (19 U.S.C. 66); sec. 624, 46 Stat. 759 (19 U.S.C. 1624); and title II, Public Law 96-39, 93 Stat. 194 (July 26, 1979).

SUBPART E—VALUATION OF MERCHANDISE

§ 152.100 Interpretative notes.

The interpretative notes set forth in this subpart have been derived from information contained in the Statement of Administrative Action relating to customs valuation, submitted to and approved by Congress along with the Trade Agreements Act of 1979 (Public Law 96-39), and will have the force and effect of regulations issued under this subpart.

§ 152.101 Basis of appraisement.

(a) *Effective date.* The value for appraisement of merchandise exported to the United States on or after July 1, 1980, or, for articles classified under item 700.60, Tariff Schedules of the United States (19 U.S.C. 1202), on or after July 1, 1981, will be determined in accordance with section 402, Tariff Act of 1930 (19 U.S.C. 1401a), as amended by section 201, Trade Agreements Act of 1979.

(b) *Methods.* Imported merchandise will be appraised on the basis and in the order, of the following:

(1) The transaction value provided for in section 152.103;

(2) The transaction value of identical merchandise provided for in section 152.104, if the transaction value cannot be determined, or can be determined but cannot be used because of the limitations provided for in section 152.103(j);

(3) The transaction value of similar merchandise provided for in section 152.104, if the transaction value of identical merchandise cannot be determined;

(4) The deductive value provided for in section 152.105, if the transaction value of similar merchandise cannot be determined;

(5) The computed value provided for in section 152.106, if the deductive value cannot be determined; or

(6) The value provided for in section 152.107, if the computed value cannot be determined.

(c) *Importer's option.* The importer may request the application of the computed value method before the deductive value method. The request must be made at the time the entry summary for the merchandise is filed with the district director (see section 141.0a(b) of this chapter). If the importer makes the request, but the value of the imported merchandise cannot be determined using the computed value method, the merchandise will be appraised using the deductive value method if it is possible to do so. If the deductive value cannot be determined, the appraised value will be determined as provided for in section 152.107.

(d) *Explanation to importer.* Upon receipt of a written request from the importer within 90 days after liquidation, the District Director shall provide a reasonable and concise written explanation of how the value of the imported merchandise was determined. The explanation will apply only to the imported merchandise being appraised and will not serve as authority with respect to the valuation of importations of any other merchandise at the same or a different port of entry. This procedure is for informational purposes only, and will not affect or replace the protest or administrative ruling procedures contained in parts 174 and 177, respectively, of this chapter, or any other Customs procedures. Under this procedure, Customs will not be required to release any information not otherwise subject to disclosure under the Freedom of Information Act, as amended (5 U.S.C. 552), the Privacy Act of 1974 (5 U.S.C. 552a), or any other statute (see part 103 of this chapter).

§152.102 Definitions.

As used in this subpart, the following terms will have the meanings indicated:

(a) *Assist.* (1) "Assist" means any of the following if supplied directly or indirectly, and free of charge or at reduced cost, by the buyer of imported merchandise for use in connection with the production or the sale for export to the United States of the merchandise—

(i) Materials, components, parts, and similar items incorporated in the imported merchandise.

(ii) Tools, dies, molds, and similar items used in the production of the imported merchandise.

best copy available

(iii) Merchandise consumed in the production of the imported merchandise.

(iv) Engineering, development, artwork, design work, and plans and sketches that are undertaken elsewhere than in the United States and are necessary for the production of the imported merchandise.

(2) No service or work to which subparagraph (1)(iv) of this paragraph applies will be treated as an assist if the service or work—

(i) Is performed by an individual domiciled within the United States;

(ii) Is performed by that individual while acting as an employee or agent of the buyer of the imported merchandise; and

(iii) Is incidental to other engineering, development, artwork, design work, or plans or sketches that are undertaken within the United States.

(3) The following apply in determining the value of assists described in subparagraph (1)(iv) of this paragraph—

(i) The value of an assist that is available in the public domain is the cost of obtaining copies of the assist.

(ii) If the production of an assist occurred in the United States and one or more foreign countries, the value of the assist is the value added outside the United States.

(iii) If the assist was purchased or leased by the buyer from an unrelated person, the value of the assist is the cost of the purchase or of the lease.

(b) *Commission.* "Selling commission" means any commission paid to the seller's agent, who is related to or controlled by, or works for or on behalf of, the manufacturer or the seller

(c) *Generally accepted accounting principles.* (1) "Generally accepted accounting principles" refers to any generally recognized consensus or substantial authoritative support regarding—

(i) Which economic resources and obligations should be recorded as assets and liabilities;

(ii) Which changes in assets and liabilities should be recorded;

(iii) How the assets and liabilities and changes in them should be measured;

(iv) What information should be disclosed and how it should be disclosed; and

(v) Which financial statements should be prepared.

(2) The applicability of a particular set of generally accepted accounting principles will depend upon the basis on which the value of the imported merchandise is sought to be established, and the relevant country for the point in contention.

(3) Information submitted by an importer, buyer, or producer in regard to the appraisement of merchandise may not be rejected by

Customs because of the accounting method by which that information was prepared, if the preparation was in accordance with generally accepted accounting principles.

(d) *Identical merchandise.* "Identical merchandise" means merchandise identical in all respects to, and produced in the same country and by the same person as, the merchandise being appraised. If identical merchandise cannot be found (or for purposes of related buyer and seller transactions (see sec. 152.103(j)(2)(i)(A)), regardless of whether identical merchandise can be found), merchandise identical in all respects to, and produced in the same country as, but not produced by the same person as, the merchandise being appraised, may be treated as "identical merchandise". "Identical merchandise" does not include merchandise that incorporates or reflects any engineering, development, artwork, design work, or plan or sketch supplied free or at reduced cost by the buyer of the merchandise for use in connection with the production or sale for export to the United States of the merchandise, and is not an assist because undertaken within the United States.

(e) *Packing costs.* "Packing costs" means the cost of all containers (exclusive of instruments of internationa traffic) and coverings of whatever nature and of packing, whether for labor or materials, used in placing merchandise in condition, packed ready for shipment to the United States.

(f) *Price actually paid or payable.* "Price actually paid or payable" means the total payment (whether direct or indirect, and exclusive of any charges, costs, or expenses incurred for transportation, insurance, and related services incident to the international shipment of the merchandise from the country of exportation to the place of importation in the United States) made, or to be made, for imported merchandise by the buyer to, or for the benefit of, the seller.

(g) *Related persons.* "Related persons" means:

(1) Members of the same family, including brothers and sisters (whether by whole or half blood), spouse, ancestors, and lineal descendants.

(2) Any officer or director of an organization, and that organization.

(3) An officer or director of an organization and an officer or director of another organization, if each individual also is an officer or director in the other organization.

(4) Partners.

(5) Employer and employee.

(6) Any person directly or indirectly owning, controlling, or holding with power to vote, five percent or more of the outstanding voting stock or shares of any organization, and that organization.

(7) Two or more persons directly or indirectly controlling, controlled by, or under common control with, any person.

(h) *Same class or kind.* "Merchandise of the same class or kind" means merchandise (including, but not limited to, identical merchandise and similar merchandise) within a group or range of merchandise produced by a particular industry or industry sector.

(i) *Similar merchandise.* "Similar merchandise" means merchandise produced in the same country and by the same person as the merchandise being appraised, like the merchandise being appraised in characteristics and component material, and commercially interchangeable with the merchandise being appraised. If similar merchandise cannot be found (or for purposes of related buyer and seller transactions (see sec. 152.103(j)(2)(i)(A)), regardless of whether similar merchandise can be found), merchandise produced in the same country as, but not produced by the same person as, the merchandise being appraised, like the merchandise being appraised in characteristics and component material, and commercially interchangeable with the merchandise being appraised, may be treated as "similar merchandise". "Similar merchandise" does not include merchandise that incorporates or reflects any engineering, development, artwork, design work, or plan or sketch supplied free or at reduced cost by the buyer of the merchandise for use in connection with the production or the sale for export to the United States of the merchandise, and is not an assist because undertaken within the United States.

(j) *Sufficient information.* "Sufficient information" means information that establishes the accuracy of:

(1) Any amount—

(i) added under section 152.103(b) to the price actually paid or payable;

(ii) deducted under section 152.105(d) as profit or general expenses or value from further processing, or

(iii) added under section 152.106(b) as profit or general expenses; or

(2) Any difference taken into account under section 152.103(j)(2)(iv); or

(3) Any adjustment made under section 152.104(d).

(k) *Unit price in greatest aggregate quantity.* "Unit price at which merchandise is sold in the greatest aggregate quantity" means the unit price at which the "merchandise concerned" is sold to unrelated persons at the first commercial level after importation (in cases to which sec. 152.105(c)(1) and (2) apply), or after further processing (in cases to which sec. 152.105(c)(3) applies), at which the sales take place in a total volume greater than the total volume sold at any other unit price and sufficient to establish the unit price.

335-083 O - 81 - 3

§ *152.103 Transaction value.*

(a) *Price actually paid or payable*—(1) *General.* In determining transaction value, the price actually paid or payable will be considered without regard to its method of derivation. It may be the result of discounts, increases, or negotiations, or may be arrived at by the application of a formula, such as the price in effect on the date of export in the London Commodity Market. The word "payable" refers to a situation in which the price has been agreed upon, but actual payment has not been made at the time of importation Payment may be made by letters of credit or negotiable instruments and may be made directly or indirectly.

Example 1. In a transaction with foreign company X, a U.S. firm pays company X $10,000 for a shipment of meat products, packed ready for shipment to the United States. No selling commission, assist, royalty, or license fee is involved. Company X is not related to the U.S. purchaser and imposes no condition or limitation on the buyer.

The customs value of the imported meat products is $10,000—the transaction value of the imported merchadise.

Example 2. A foreign shipper sold merchandise at $100 per unit to a U.S. importer. Subsequently, the foreign shipper increased its price to $110 per unit. The merchandise was exported after the effective date of the price increase. The invoice price of $100 was the price originally agreed upon and the price the U.S. importer actually paid for the merchandise.

How should the merchandise be appraised?

Actual transaction value of $100 per unit based on the price actually paid or payable.

Example 3. A foreign shipper sells to U.S. wholesalers at one price and to U.S. retailers at a higher price. The shipment undergoing appraisement is a shipment to a U.S. retailer. There are continuing shipments of identical and similar merchandise to U.S. wholesalers.

How should the merchandise be appraised?

Actual transaction value based on the price actually paid or payable by the retailer.

Example 4. Company X in the United States pays $2,000 to Y Toy Factory abroad for a shipment of toys. The $2,000 consists of $1,850 for the toys and $150 for ocean freight and insurance. Y Toy Factory would have charged company X $2,200 for the toys; however, because Y owed company X $350, Y charged only $1,850 for the toys. What is the transaction value?

The transaction value of the imported merchandise is $2,200, that is, the sum of the $1,850 plus the $350 indirect payment. Because the transaction value excludes c.i.f. charges the $150 ocean freight and insurance charge is excluded.

Example 5. A seller offers merchandise at $100, less a 2-percent discount for cash. A buyer remits $98 cash, taking advantage of the cash discount.

The transaction value is $98, the price actually paid or payable.

(2) *Indirect payment.* An indirect payment would include the settlement by the buyer, in whole or in part, of a debt owed by the seller, or where the buyer receives a price reduction on a current importation as a means of settling a debt owed him by the seller. Activities such as

advertising, undertaken by the buyer on his own account, other than those for which an adjustment is provided in section 152.103(b), will not be considered an indirect payment to the seller though they may benefit the seller. The costs of those activities will not be added to the price actually paid or payable in determining the Customs value of the imported merchandise.

(3) *Assembled merchandise.* The price actually paid or payable may represent an amount for the assembly of imported merchandise in which the seller has no interest other than as the assembler. The price actually paid or payable in that case will be calculated by the addition of the value of the components and required adujstments to form the basis for the transaction value.

Example 1. The importer previously has supplied an unrelated foreign assembler with fabricated components ready for assembly having a value or cost at the assembler's plant of $1 per unit. The importer pays the assembler 50 cents per unit for the assembly. The transaction value for the assembled unit is $1.50.

Example 2. Same facts as example 1 above except the U.S. importer furnishes to the foreign assembler a tooling assist consisting of a tool acquired by the importer at $1,000. The transportation expenses to the foreign assembler's plant for the tooling assist equal $100. The transaction value for the assembled unit would be $1.50 per unit plus a pro rata share of the tooling assist valued at $1,100.

(4) *Rebate.* Any rebate of, or other decrease in, the price actually paid or payable made or otherwise effected between the buyer and seller after the date of importation of the merchandise will be disregarded in determining the transaction value under section 152.-103(b).

(5) *Foreign inland freight.* If the price actually paid or payable by the buyer to the seller for the imported merchandise does not include a foreign inland freight charge (an ex-factory price), the foreign inland freight charge will not be added to the price if paid to an unrelated seller. In those situations where the price actually paid or payable for imported merchandise included a charge for foreign inland freight, that charge will be part of the transaction value to the extent it is included in that price.

(b) *Additions to price actually paid or payable.* (1) The transaction value of imported merchandise is the price actually paid or payable for the merchandise when sold for exportation to the United States, plus amounts equal to—

(i) The packing costs incurred by the buyer with respect to the imported merchandiser;

(ii) Any selling commission incurred by the buyer with respect to the imported merchandise;

(iii) The value, apportioned as appropriate, of any assist;

(iv) Any royalty or license fee related to the imported merchandise

that the buyer is required to pay, directly or indirectly, as a condition of the sale of the imported merchandise for exportation to the United States; and

(v) The proceeds of any subsequent resale, disposal, or use of the imported merchandise that accrue, directly or indirectly, to the seller.

(2) The price actually paid or payable for imported merchandise will be increased by the amounts attributable to the items (and no others) described in paragraphs (b)(1) (i) through (v) of this section to the extent that each amount is not otherwise included within the price actually paid or payable, and is based on sufficient information. If sufficient information is not available, for any reason, with respect to any amount referred to in this section, the transaction value will be treated as one that cannot be determined.

(3) *Interpretative note.* A royalty is paid on the basis of the price in a sale in the United States of a gallon of a particular product imported by the pound and transformed into a solution after importation. If the royalty is based partially on the imported merchandise and partially on other factors which have nothing to do with the imported merchandise (such as if the imported merchandise is mixed with domestic ingredients and is no longer separately identifiable, or if the royalty cannot be distinguished from special financial arrangements between the buyer and the seller), it would be inappropriate to attempt to make an addition for the royalty. However, if the amount of this royalty is based only on the imported merchandise and can be readily quantified, an addition to the price actually paid or payable will be made.

(c) *Sufficiency of information.* Additions to the price actually paid or payable will be made only if there is sufficient information to establish the accuracy of the additions and the extent to which they are not included in the price.

(d) *Assist.* If the value of an assist is to be added to the price actually paid or payable, or to be used as a component of computed value, the district director shall determine the value of the assist and apportion that value to the price of the imported merchandise in the following manner:

(1) If the assist consists of materials, components, parts, or similar items incorporated in the imported merchandise, or items consumed in the production of the imported merchandise, acquired by the buyer from an unrelated seller, the value of the assist is the cost of its acquisition. If the assist were produced by the buyer or a person related to the buyer, its value would be the cost of its production. In either case, the value of the assist would include transportation costs to the place of production.

(2) If the assist consists of tools, dies, molds, or similar items used

in the production of the imported merchandise, acquired by the buyer from an unrelated seller, the value of the assist is the cost of its acquisition. If the assist were produced by the buyer or a person related to the buyer, its value would be the cost of its production. If the assist has been used previously by the buyer, regardless of whether it had been acquired or produced by him, the original cost of acquisition or production would be adjusted downward to reflect its use before its value could be determined. If the assist were leased by the buyer from an unrelated seller, the value of the assist would be the cost of the lease. In either case, the value of the assist would include transportation costs to the place of production. Repairs or modifications to an assist may increase its value.

Example 1. A U.S. importer supplied detailed designs to the foreign producer. These designs were necessary to manufacture the merchandise. The U.S. importer bought the designs from an engineering company in the United States for submission to his foreign supplier.

Should the appraised value of the merchandise include the value of the assist?

No. Design work undertaken in the United States may not be added to the price actually paid or payable.

Example 2. A U.S. importer supplied molds free of charge to the foreign shipper. The molds were necessary to manufacture merchandise for the U.S. importer. The U.S. importer had some of the molds manufactured by a U.S. company and others manufactured in the third country.

Should the appraised value of the merchandise include the value of the molds?

Yes. It is an addition required to be made to transaction value.

(e) *Apportionment.* (1) The apportionment of the value of assists to imported merchandise will be made in a reasonable manner appropriate to the circumstances and in accordance with generally accepted accounting principles. The method of apportionment actually accepted by Customs will depend upon the documentation submitted by the importer. If the entire anticipated production using the assist is for exportation to the United States, the total value may be apportioned over (i) the first shipment, if the importer wishes to pay duty on the entire value at once (ii) the number of units produced up to the time of the first shipment or (iii) the entire anticipated production. In addition to these three methods, the importer may request some other method of apportionment in accordance with generally accepted accounting principles. If the anticipated production is only partially for exportation to the United States, or if the assist is used in several countries, the method of apportionment will depend upon the documentation submitted by the importer.

(2) *Interpretative note.* An importer provides the producer with a mold to be used in the production of the imported merchandise and contracts to buy 10,000 units. By the time of arrival of the first shipment of 1,000 units, the producer has already produced 4,000

units. The importer may request Customs to apportion the value of the mold over 1,000, 4,000, 10,000 units, or any other figure which is in accordance with generally accepted accounting principles.

(f) *Royalties or license fees.* Royalties or license fees for patents covering processes to manufacture the imported merchandise generally will be dutiable. Royalties or license fees paid to third parties for use, in the United States, of copyrights and trademarks related to the imported merchandise generally will be considered selling expenses of the buyer and not dutiable. The dutiable status of royalties or license fees paid by the buyer will be determined in each case and will depend on (1) whether the buyer was required to pay them as a condition of sale of the merchandise for exportation to the United States, and (2) to whom and under what circumstances they were paid. Payments made by the buyer to a third party for the right to distribute or resell the imported merchandise will not be added to the price actually paid or payable for the imported merchandise if the payments are not a condition of the sale of the merchandise for exportation to the United States.

Example. A foreign producer sold merchandise to an unrelated U.S. importer. The U.S. importer pays a royalty to an unrelated third party for the right to manufacture and sell a product made in part from the imported merchandise. The royalty is based on the selling price of the further-manufactured product in the United States.

Is the license fee part of the appraised value? No. The license fee is not a condition of the sale of the imported merchandise for export to the United States.

(g) *Proceeds of subsequent resale.* Additions to the price actually paid or payable will be made for the value of any part of the proceeds of any subsequent resale, disposal, or use of the imported merchandise that accrues directly or indirectly to the seller. Dividends or other payments from the buyer to the seller which do not relate directly to the imported merchandise will not be added to the price actually paid or payable. Whether any addition would be made will depend on the facts of the particular case.

Example. A buyer contracts to import a new product. Not knowing whether the product ultimately will sell in the United States, the buyer agrees to pay the seller initially $1 per unit with an additional $1 per unit to be paid upon the sale of each unit in the United States. Assuming the resale price in the United States can be determined in a reasonable period of time, the transaction value of each unit would be $2. Otherwise, the transaction value could not be determined for want of sufficient information.

(h) *Right to reproduce.* Charges for the right to reproduce the imported merchandise in the United States will not be added to the price actually paid or payable. The right to reproduce denotes that an idea or an original work is incorporated in, or reflected by, the imported merchandise, and the right is reserved to reproduce that

idea or work in other merchandise by using the imported merchandise. The concept of the right to reproduce relates only to the following classes of merchandise: originals or copies of artistic or scientific works; originals or copies of models and industrial drawings; model machines and prototypes; and plant and animal species.

Example. The importer purchases a painting. By purchasing the painting, the owner possesses the right to resell, lease, or otherwise place it on display. Absent an agreement to the contrary, he does not possess the right to reproduce copies of the painting. Fees paid for the right to reproduce the painting would not be dutiable.

(i) *Exclusions from transaction value.* The transaction value of imported merchandise does not include any of the following, if identified separately from the price actually paid or payable and from any cost or other item referred to in paragraph (b) of this section:

(1) Any reasonable cost or charge that is incurred for—

(i) The construction, erection, assembly, or maintenance of, or the technical assistance provided with respect to, the merchandise after its importation into the United States; or

(ii) The transportation of the merchandise after its importation.

(2) The customs duties and other Federal taxes currently payable on the imported merchandise by reason of its importation, and any Federal excise tax on, or measured by the value of, the merchandise for which vendors in the United States ordinarily are liable.

Example. A foreign shipper sells a piece of equipment to a U.S. buyer. The total contract price for the equipment includes technical assistance in the United States. The equipment cannot be purchased without the technical assistance, but the contract provides a breakdown of costs.

Should the appraised value include the technical assistance? No, transaction value does not include any reasonable costs for construction, erection, assembly, maintenance of, or technical assistance, for the imported merchandise after its importation into the United States, the cost of which can be accurately identified as being separate from the price actually paid or payable for the merchandise to which they relate.

(j) *Limitations on use of transaction value.*—(1) *In general.* The transaction value of imported merchandise will be the appraised value only if—

(i) There are no restrictions on the disposition or use of the imported merchandise by the buyer, other than restrictions which are imposed or required by law, limit the geographical area in which the merchandise may be resold, or do not affect substantially the value of the merchandise;

(ii) The sale of, or the price actually paid or payable for, the imported merchandise is not subject to any condition or consideration for which a value cannot be determined;

(iii) No part of the proceeds of any subsequent resale, disposal, or

use of the imported merchandise by the buyer will accrue directly or indirectly to the seller, unless an appropriate adjustment can be made under paragraph (b)(1)(v) of this section; and

(iv) The buyer and seller are not related, or the buyer and seller are related but the transaction value is acceptable.

(2) *Related person transactions.* (i) The transaction value between a related buyer and seller is acceptable if an examination of the circumstances of sale indicates that their relationship did not influence the price actually paid or payable, or if the transaction value of the imported merchandise closely approximates—

(A) The transaction value of identical merchandise, or of similar merchandise, in sales to unrelated buyers in the United States; or

(B) The deductive value or computed value of identical merchandise, or of similar merchandise; and

(C) Each value referred to in paragraph (j)(2)(i) (A) and (B) of this section that is used for comparison relates to merchandise that was exported to the United States at or about the same time as the imported merchandise.

(ii) In applying the values used for comparison, differences with respect to the sales involved will be taken into account if based on sufficient information supplied by the buyer or otherwise available to Customs and if the differences relate to—

(A) Commercial levels;

(B) Quantity levels;

(C) The costs, commissions, values, fees, and proceeds described in paragraph (b) of this section; and

(D) The costs incurred by the seller in sales in which the seller and the buyer are not related that are not incurred by the seller in sales in which the seller and the buyer are related.

(k) *Restrictions and conditions on sale.* (1) A restriction placed on the buyer of imported merchandise that does not affect substantially its value will not prevent transaction value from being accepted as the appraised value.

(i) *Interpretative note.* A seller requires a buyer of automobiles not to sell or exhibit them before a fixed date that represents the beginning of a model year.

(2) The transaction value will not be accepted as the appraised value if the sale of, or the price actually paid or payable for, the merchandise is subject to a condition or consideration for which a value cannot be determined.

(i) *Interpretative note 1.* The seller establishes the price of the imported merchandise on condition that the buyer also will buy other merchandise in specified quantities.

(ii) *Interpretative note 2.* The price of the imported merchandise is

dependent upon the price or prices at which the buyer of the merchandise sells other merchandise to the seller of the merchandise.

(iii) *Interpretative note 3.* The price of the imported merchandise is established on the basis of a form of payment extraneous to the merchandise, such as where the merchandise is to be further processed by the buyer, and has been provided by the seller on condition that he will receive a specified quantity of the finished merchandise.

(l) *Related buyer and seller.*—(1) *Validation of transaction.* The district director shall not disregard a transaction value solely because the buyer and seller are related. There will be related person transactions in which validation of the transaction value, using the procedures contained in section 152.103(j)(2), may not be necessary.

(i) *Interpretative note 1.* Customs may have previously examined the relationship or may already have sufficient detailed information concerning the buyer and seller to be satisfied that the relationship did not influence the price actually paid or payable. In such case, if Customs has no doubts about the acceptability of the price, the price will be accepted without requesting further information from the importer. If Customs does have doubts about the acceptability of the price and is unable to accept the transaction value without further inquiry, the importer will be given an opportunity to supply such further detailed information as may be necessary to enable Customs to examine the circumstances of the sale. In this context, Customs will examine relevant aspects of the transaction, including the way in which the buyer and seller organize their commercial relations and the way in which the price in question was arrived at in order to determine whether the relationship influenced the price.

(ii) *Interpretative note 2.* If it is shown that the buyer and seller, although related, buy from and sell to each other as if they were not related, this will demonstrate that the price has not been influenced by the relationship, and the transaction value will be accepted. If the price has been settled in a manner consistent with the normal pricing practices of the industry in question, or with the way the seller settles prices for sales to buyers who are not related to him, this will demonstrate that the price has not been influenced by the relationship.

(iii) *Interpretative note 3.* If it is shown that the price is adequate to ensure recovery of all costs plus a profit which is equivalent to the firm's overall profit realized over a representative period of time (e.g., on an annual basis) in sales of merchandise of the same class or kind, this would demonstrate that the price had not been influenced.

Example. **A foreign seller sells merchandise to a related U.S. importer. The foreign seller does not sell identical merchandise or similar merchandise to any unrelated parties. The transaction between the foreign seller and the U.S. importer is determined by Customs to be unaffected by the relationship.**

How should the merchandise be appraised?

Transaction value based on the price actually paid or payable. A transaction value between a related buyer and seller is acceptable if the relationship did not affect the price actually paid or payable. This is so even if similar merchandise is being sold at a higher price, which includes a higher percentage for profit and general expenses.

(2) *Test values.* (i) The importer or the buyer may demonstrate that the transaction value in a related person transaction is acceptable by showing that the value "closely approximates" any one of the test values provided in section 152.103(j)(2)(i). The factors that will be examined to determine if the transaction value closely approximates a test value include:

(A) The nature of the imported merchandise and the industry,

(B) The season in which the merchandise is imported,

(C) Whether the difference in value is commercially significant, and

(D) Whether the difference in value is attributable to internal transport costs in the country of exportation.

(ii) Because these factors may vary, Customs will not be able to apply a uniform standard, such as a fixed percentage, in each case. A small difference in value in a case involving one type of imported merchandise may be unacceptable, although a large difference in a case involving another type may be acceptable, in determining if the transaction value closely approximates any of the test values. Customs will be consistent in determining if one value "closely approximates" another value. The same approach will be taken if Customs considers a transaction value that is higher than any of the enumerated test values as will be taken if the transaction value is lower than any of the test values.

Example. In applying any of the test values, if the transaction value in the sale under consideration is rejected because 95 does not closely approximate 100, then a transaction value for the sale of the same merchandise at 105 occurring at or about the same time likewise would have to be rejected. Similarly, if 103 were considered to closely approximate 100, a transaction value of 97 likewise would closely approximate 100.

(iii) If one of the test values provided in section 152.103(j)(2)(i) has been found to be appropriate, the district director shall not seek to determine if the relationship between the buyer and seller influenced the price. If the district director already has sufficient information to be satisfied, without further detailed inquiries, that one of the test values is appropriate, he shall not require the importer to demonstrate that the test value is appropriate.

(m) *Rejection of transaction value.* When Customs has grounds for rejecting the transaction value declared by an importer and that rejection increases the duty liability, the district director shall inform the importer of the grounds for the rejection. The importer will be afforded

20 days to respond in writing to the district director if in disagreement. This procedure will not affect or replace the administrative ruling procedures contained in part 177 of this chapter, or any other Customs procedures.

§ *152.104 Transaction value of identical merchandise and similar merchandise.*

(a) *General.* The transaction value of identical merchandise, or of similar merchandise, is the transaction value (acceptable as the appraised value under section 152.103 but adjusted under para. (e) of this section) of imported merchandise that is—

(1) With respect to the merchandise being appraised, either identical merchandise; or similar merchandise; and

(2) Exported to the United States at or about the time that the merchandise being appraised is exported to the United States.

(b) *Identical merchandise.* Minor differences in appearance will not preclude otherwise conforming merchandise from being considered "identical". See section 152.102(d).

(c) *Similar merchandise.* The quality of the merchandise, its reputation, and the existence of a trademark will be factors considered to determine whether merchandise is "similar". See section 152.102(i).

(d) *Commercial level and quantity.* Transaction values determined under this section will be based on sales of identical merchandise, or similar merchandise, at the same commercial level and in substantially the same quantity as the sales of the merchandise being appraised. If no such sale is found, sales of identical merchandise, or similar merchandise, at either a different commercial level or in different quantities, or both, will be used, but adjusted to take account of that difference. Any adjustment made under this section will be based on "sufficient information". See section 152.102(j). If in applying this section to any merchandise, two or more transaction values for identical merchandise, or for similar merchandise, are determined, the merchandise will be appraised on the basis of the lower or lowest of those values.

(e) *Adjustments.* (1) Adjustments for identical merchandise, or similar merchandise because of different commercial levels or quantities, or both, whether leading to an increase or decrease in the value, will be made only on the basis of sufficient information; e.g., valid price lists containing prices referring to different levels or quantities.

(2) *Interpretative note.* If the imported merchandise being valued consist of a shipment of 10 units and the only identical imported merchandise for which a transaction value exists involved a sale of 500 units, and it is recognized that the seller grants quantity discounts, the required adjustment may be accomplished by resorting to the seller's price list and using that price applicable to a sale of 10 units.

This does not require that a sale had to have been made in quantities of 10 as long as the price list has been established as being bona fide through sales at other quantities. In the absence of such an objective measure, however, the determination of a customs value under the provisions for transaction value of identical or similar merchandise is not appropriate.

§ *152.105 Deductive value.*

(a) *Merchandise concerned.* For the purposes of deductive value, "merchandise concerned" means the merchandise being appraised, identical merchandise, or similar merchandise.

(b) *Merchandise of the same class or kind.* For the purposes of deductive value, "merchandise of the same class or kind" includes merchandise imported from the same country as well as other countries as the merchandise being appraised.

(c) *Prices.* The deductive value of the merchandise being appraised is whichever of the following prices (as adjusted under paragraph (d) of this section) is appropriate depending upon when and in what condition the merchandise concerned is sold in the United States:

(1) If the merchandise concerned is sold in the condition as imported at or about the date of importation of the merchandise being appraised, the price is the unit price at which the merchandise concerned is sold in the greatest aggregate quantity at or about such date.

(2) If the merchandise concerned is sold in the condition as imported but not sold at or about the date of importation of the merchandise being appraised, the price is the unit price at which the merchandise concerned is sold in the greatest aggregate quantity after the date of importation of the merchandise being appraised but before the close of the 90th day after the date of such importation.

(3) If the merchandise concerned was not sold in the condition as imported and not sold before the close of the 90th day after the date of importation of the merchandise being appraised, the price is the unit price at which the merchandise being appraised, after further processing, is sold in the greatest aggregate quantity before the 180th day after the date of such importation. This provision will apply to appraisement of merchandise only if the importer so elects at the time of filing the entry summary.

(d) *Deductions from price.* The price determined under paragraph (c) of this section will be reduced by an amount equal to—

(1) Any commission usually paid or agreed to be paid, or the addition usually made for profit and general expenses, in connection with sales in the United States of imported merchandise that is of the same class or kind, regardless of the country of exportation, as the merchandise concerned;

(2) The actual costs and associated costs of transportation and insurance incurred with respect to international shipments of the merchandise concerned from the country of exportation to the United States;

(3) The usual costs and associated costs of transportation and insurance incurred with respect to shipments of the merchandise concerned from the place of importation to the place of delivery in the United States, if those costs are not included as a general expense under paragraph (d)(1) of this section;

(4) The customs duties and other Federal taxes currently payable on the merchandise concerned by reason of its importation, and any Federal excise tax on, or measured by the value of, the merchandise for which vendors in the United States ordinarily are liable; and

(5) But only in the case of price determined under paragraph (c)(3) of this section, the value added by the processing of the merchandise after importation to the extent that the value is based on sufficient information relating to the cost of that processing.

(e) *Profit and general expenses; special rules.* (1) The deduction made for profit and general expenses (taken as a whole) will be based upon the importer's profit and general expenses, unless the profit and general expenses are inconsistent with those reflected in sales in the United States of imported merchandise of the same class or kind from all countries, in which case the deduction will be based on the usual profit and general expenses reflected in those sales, as determined from sufficient information. Any State or local tax imposed on the importer with respect to the sale of imported merchandise will be treated as a general expense.

(2) In determining deductions for commissions and usual profit and general expenses, sales in the United States of the narrowest group or range of imported merchandise of the same class or kind, including the merchandise being appraised, for which sufficient information can be provided, will be examined.

(f) *Packing costs.* The price determined under paragraph (c) of this section will be increased, but only to the extent that the costs are not otherwise included, by an amount equal to the packing costs incurred by the importer or the buyer with respect to the merchandise concerned.

(g) *Assists.* For purposes of determining deductive value, any sale to a person who supplies any assist for use in connection with the production or sale for export of the merchandise concerned will be disregarded.

(h) *Unit price in greatest aggregate quantity.* The unit price will be established after a sufficient number of units have been sold to an unrelated person. The unit price to be used when the units have been

335-083 O - 81 - 4

sold in different quantities will be that at which the total volume sold is greater than the total volume sold at any other unit price.

(1) *Interpretative note 1.* Merchandise is sold to an unrelated person from a price list which grants favorable unit prices for purchases made in larger quantities:

Sales quantity	Unit price	Number of sales	Total quantity sold at each price
1 to 10 units	$100	10 sales of 5 units	65
		5 sales of 3 units	
11 to 25 units	95	5 sales of 11 nuits	55
Over 25 units	90	1 sale of 30 units	80
		1 sale of 50 units	

The greatest number of units sold at a price is 80; therefore, the unit price in the greatest aggregate quantity is $90.

(2) *Interpretative note 2.* Two sales to unrelated persons occur in the first sale, 500 units are sold at a price of $95 each; in the second sale, 400 units are sold at a price of $90 each. In this example, the greatest number of units sold at a particular price is 500; therefore, the unit price in the greatest aggregate quantity is $95.

(3) *Interpretative note 3.* Various quantities are sold to unrelated persons at various prices:

(a) *Sales*

Sale quantity:	Unit price
40 units	$100
30 units	90
15 units	100
50 units	95
25 units	105
35 units	90
5 units	100

(b) *Totals*

Total quantity sold:	Unit price
65	$90
50	95
60	100
25	105

In this example, the greatest number of units sold at a particular price is 65; therefore, the unit price in the greatest aggregate quantity is $90.

(i) *Further processing.*—(1) *Quantified data.* If merchandise has undergone further processing after its importation into the United States and the importer elects the method specified in paragraph (c)(3) of this section, deductions made for the value added by that processing will be based on objective and quantifiable data relating to the cost of the work performed. Accepted industry formulas, recipes, methods of construction, and other industry practices would form the basis for the deduction. That deduction also will reflect amounts for spoilage, waste, or scrap derived from the further processing.

(2) *Loss of identity.* If the imported merchandise loses its identity as a result of further processing, the method specified in paragraph (c)(3) of this section will not be applicable unless the value added by the processing can be determined accurately without unreasonable difficulty for either importers or Customs. If the imported merchandise maintains its identity but forms a minor element of the merchandise sold in the United States, the use of paragraph (c)(3) of this section will be unjustified. The district director shall review each case involving these issues on its merits.

Example. A foreign shipper sells merchandise to a related U.S. importer. The foreign shipper does not sell to any unrelated person. The transaction between the foreign shipper and the U.S. importer is determined to have been affected by the relationship. There is no identical or similar merchandise from the same country of production. The U.S. importer further processes the product and sells the finished product to an unrelated buyer in the United States within 180 days of the date of importation. No assists from the unrelated U.S. buyer are involved, and the type of processing involved can be accurately costed.

How should the merchandise be appraised?

The merchandise should be appraised under deductive value with allowances for profit and general expenses, freight and insurance, duties and taxes, and the cost of processing.

§ *152.106 Computed value.*

(a) *Elements.* The computed value of imported merchandise is the sum of—

(1) The cost or value of the materials and the fabrication and other processing of any kind employed in the production of the imported merchandise;

(2) An amount for profit and general expenses equal to that usually reflected in sales of merchandise of the same class or kind as the imported merchandise that are made by the producers in the country of exportation for export to the United States;

(3) Any assist, if its value is not included under paragraph (a) (1) or (2) of this section; and

(4) The packing costs.

(b) *Special rules.* (1) The cost or value of materials under paragraph (a)(1) of this section will not include the amount of any internal tax

imposed by the country of exportation that is directly applicable to the materials or their disposition if the tax is remitted or refunded upon the exportation of the merchandise in the production of which the materials were used.

(2) The amount for profit and general expenses under paragraph (a)(2) of this section will be based upon the producer's profit and general expenses, unless the producer's profit and general expenses are inconsistent with those usually reflected in sales of merchandise of the same class or kind as the imported merchandise that are made by producers in the country of exportation for export to the United States. In that case, the amount under paragraph (a)(2) of this section will be based on the usual profit and general expenses of such producers in those sales, as determined from "sufficient information." See section 152.102(j).

(c) *Profit and general expenses.* The amount for profit and general expenses will be taken as a whole. If the producer's profit figure is low and general expenses high, those figures taken together nevertheless may be consistent with those usually reflected in sales of imported merchandise of the same class or kind.

(1) *Interpretative note 1.* A product is introduced into the United States, and the producer accepts either no profit or a low profit to offset the high general expenses required to introduce the product into this market. If the producer can demonstrate that there is a low profit on sales of the imported merchandise because of peculiar commercial circumstances, the actual profit figures will be accepted provided the producer has valid commercial reasons to justify them and his pricing policy reflects the usual pricing policies in the industry.

(2) *Interpretative note 2.* Producers have been forced to lower prices temporarily because of an unforeseeable drop in demand, or they sell merchandise to complement a range of merchandise being produced in the United States and accept a low profit to maintain competitiveness. If the producer's own figures for profit and general expenses are not consistent with those usually reflected in sales of merchandise of the same class or kind as the merchandise being valued which are made in the country of exportation for export to the United States, the amount of profit and general expenses will be based upon reliable and quantifiable information other than that supplied by or on behalf of the producer of the merchandise.

(d) *Assists and packing costs.* Computed value also will include an amount equal to the apportioned value of any assists used in the production of the imported merchandise and the packing costs for the imported merchandise. The value of any engineering, development, artwork, design work, and plans and sketches undertaken in the United States will be included in computed value only to the extent that their value has been charged to the producer. Depending on the pro-

ducer's method of accounting, the value of assists may be included (duplicated) in the producer's cost of materials, fabrication, and other processing, or in the general expenses. If duplication occurs, a separate amount for the value of the assists will not be added to the other elements as it is not intended that any component of computed value be included twice.

(e) *Merchandise of same class or kind.* Sales for export to the United States of the narrowest group or range of imported merchandise, including the merchandise being appraised, will be examined to determine usual profit and general expenses. For the purpose of computed value, merchandise of the same class or kind must be from the same country as the merchandise being appraised.

Example. A foreign shipper sells merchandise to a related U.S. importer. The foreign shipper does not sell to any unrelated persons. The transaction between the foreign shipper and the U.S. importer is determined to have been affected by the relationship. There is no identical or similar merchandise from the same country of production. The U.S. importer further processes the product and sells the finished product to an unrelated buyer in the United States within 180 days of the date of importation. No assists from the unrelated U.S. buyer are involved, and the type of processing involved can be accurately costed. The U.S. importer has requested that the shipment be appraised under computed value. The profit and general expenses figure for the same class or kind of merchandise in the country of exportation for export to the United States is known.

How should the merchandise be appraised?

The merchandise should be appraised under computed value, using the company's profit and general expenses if not inconsistent with those usually reflected in sales of merchandise of the same class or kind.

(f) *Availability of information.* (1) It will be presumed that the computed value of the imported merchandise cannot be determined if—

(i) The importer is unable to provide required computed value information within a reasonable time, and/or

(ii) The foreign producer refuses to provide, or is legally prevented from providing, that information.

(2) If information other than that supplied by or on behalf of the producer is used to determine computed value, the district director shall inform the importer, upon written request, of

(i) The source of the information,

(ii) The data used, and

(iii) The calculation based upon the specified data if not contrary to domestic law regarding disclosure of information. See also section 152.101(d).

§ *152.107 Value if other values cannot be determined or used.*

(a) *Reasonable adjustments.* If the value of imported merchandise cannot be determined or otherwise used for the purposes of this subpart, the imported merchandise will be appraised on the basis of a value derived from the methods set forth in sections 152.103 through 152.106,

reasonably adjusted to the extent necessary to arrive at a value. Only information available in the United States will be used.

(b) *Identical merchandise or similar merchandise.* The requirement that identical merchandise, or similar merchandise, should be exported at or about the same time of exportation as the merchandise being appraised may be interpreted flexibly. Identical merchandise, or similar merchandise, produced in any country other than the country of exportation or production of the merchandise being appraised may be the basis for customs valuation. Customs values of identical merchandise, or similar merchandise, already determined on the basis of deductive value or computed value may be used.

(c) *Deductive value.* The "90 days" requirement for the sale of merchandise referred to in section 152.105(c) may be administered flexibly.

§ 152.108 Unacceptable bases of appraisement.

For the purposes of this subpart, imported merchandise may not be appraised on the basis of—

(1) The selling price in the United States of merchandise produced in the United States;

(2) A system that provides for the appraisement of imported merchandise at the higher of two alternative values;

(3) The price of merchandise in the domestic market of the country of exportation;

(4) A cost of production, other than a value determined under section 152.106 for merchandise that is identical merchandise, or similar merchandise, to the merchandise being appraised;

(5) The price of merchandise for export to a country other than the United States;

(6) Minimum values for appraisement; or

(7) Arbitrary or fictitious values.

(R.S. 251, 46 Stat. 759 title II, Public Law 96–39, 93 Stat. 194 (19 U.S.C. 66, 402, 1624))

[Published in Federal Register Jan. 12, 1981 (46 F.R. 2597)]

(T.D. 81-8)

Customs Delegation Order No. 62

Order of Acting Commissioner of Customs establishing an order of succession of persons to act as Commissioner of Customs

DEPARTMENT OF THE TREASURY,
OFFICE OF THE COMMISSIONER OF CUSTOMS,
Washington, D.C., January 6, 1981.

By virtue of the authority vested in me by Treasury Department Order No. 129, Revision No. 2, dated April 22, 1955 (20 F.R. 2875), it is hereby ordered that the following officers of the U.S. Customs

Service in the order of succession enumerated, shall act as Commissioner of Customs, in the event of an enemy attack or during the absence or disability of the Commissioner of Customs, or when there is a vacancy in such office:

1. The Deputy Commissioner of Customs
2. The Assistant Commissioner (Border Operations)
3. The Assistant Commissioner (Commercial Operations)
4. Comptroller
5. Assistant Commissioner (Management Integrity)

By virtue of authority vested in me by said Treasury Department Order No. 129 (Revision No. 2), and Treasury Department Order No. 165, Revised (T.D. 53654; 19 F.R. 7241), there is hereby delegated to the Regional Commissioners of Customs, District Directors of Customs, and Port Directors of Customs, in the event of an enemy attack on the continental United States, authority to perform any function of the Commissioner of Customs which is necessary to insure continuous performance of essential functions otherwise assigned to such officers. This delegation of authority will remain in effect until notice has been received from proper authority that it has been terminated.

This order supersedes Customs Delegation Order No. 60, dated February 7, 1980 (T.D. 80-75).

WILLIAM T. ARCHEY,
Acting Commissioner of Customs.

[Published in the Federal Register, Jan. 12, 1981 (46 F.R. 2765)]

(T.D. 81-9)

Foreign Currencies—Variances From Quarterly Rate

The following rates of exchange are based upon rates certified to the Secretary of the Treasury by the Federal Reserve Bank of New York, pursuant to section 522(c), Tariff Act of 1930, as amended (31 U.S.C. 372(c)), and reflect variances of 5 per centum or more from the quarterly rate published in T.D. 80-249 for the following countries. Therefore, as to entries covering merchandise exported on the dates listed, whenever it is necessary for Customs purposes to convert such currency into currency of the United States, conversion shall be at the following rates:

Austria schilling:	
December 22, 1980	$0.071582
December 23, 1980	.072516
December 24, 1980	.072359
December 25, 1980	Holiday
December 26, 1980	.072202

Belgium franc:	
December 22, 1980	$0.031566
December 23, 1980	.031898
December 24, 1980	.031847
December 25, 1980	Holiday
December 26, 1980	.031888
Denmark krone:	
December 22, 1980	$0.165358
December 23, 1980	.166945
December 24, 1980	.168919
December 25, 1980	Holiday
December 26, 1980	.168805
Finland markka:	
December 22, 1980	$0.258065
December 23–26, 1980	Quarterly
France franc:	
December 22, 1980	$0.220264
December 23, 1980	.222346
December 24, 1980	.222965
December 25, 1980	Holiday
December 26, 1980	.220994
Germany deutsche mark:	
December 22, 1980	$0.510986
December 23, 1980	.512164
December 24, 1980	.514668
December 25, 1980	Holiday
December 26, 1980	.514801
Ireland pound:	
December 22, 1980	$1.8840
December 23–24, 1980	1.9100
December 25, 1980	Holiday
December 26, 1980	1.9050
Italy lira:	
December 22, 1980	$0.001071
December 23, 1980	.001082
December 24, 1980	.001083
December 25, 1980	Holiday
December 26, 1980	.001082

Netherlands guilder:	
December 22, 1980	$0.469484
December 23, 1980	.471476
December 24, 1980	.471698
December 25, 1980	Holiday
December 26, 1980	.472255
Norway krone:	
December 22, 1980	$0.193798
December 23, 1980	.193986
December 24, 1980	.194553
December 25, 1980	Holiday
December 26, 1980	.194439
Portugal escudo:	
December 22, 1980	$0.018744
December 23, 1980	.018815
December 24, 1980	.018850
December 25, 1980	Holiday
December 26, 1980	.018832
Spain peseta:	
December 22, 1980	$0.012534
December 23, 1980	.012575
December 24, 1980	.012715
December 25, 1980	Holiday
December 26, 1980	.012690
Sri Lanka rupee:	
December 22–24, 1980	$0.057045
December 25, 1980	Holiday
December 26, 1980	.056402
Sweden krona:	
December 22, 1980	$0.227118
December 23, 1980	.228050
December 24–26, 1980	Quarterly
Switzerland franc:	
December 22, 1980	$0.564016
December 23, 1980	.563380
December 24, 1980	.567215
December 25, 1980	Holiday
December 26, 1980	.564175

(LIQ–03–01 O:C:E)

Dated: December 29, 1980.

GWENN KLEIN KIRSCHNER,
Acting Chief,
Customs Information Exchange.

(T.D. 81-10)

Foreign Currencies—Daily Rates For Countries Not on Quarterly List

Rates of exchange based on rates certified to the Secretary of the Treasury by the Federal Reserve Bank of New York for the Brazil cruzeiro, People's Republic of China yuan, Hong Kong dollar, Iran rial, Philippines peso, Singapore dollar, Thailand baht (tical), and Venezuela bolivar

The Federal Reserve Bank of New York, pursuant to section 522(c), Tariff Act of 1930, as amended (31 U.S.C. 372(c)), has certified buying rates for the dates and foreign currencies shown below. The rates of exchange, based on these buying rates, are published for the information and use of Customs officers and others concerned pursuant to part 159, subpart C, Customs Regulations (19 CFR 159, subpart C).

Brazil cruzeiro:	
December 22, 1980	$0.0156
December 23–26, 1980	.0153
People's Republic of China yuan:	
December 22–23, 1980	$0.649266
December 24–26, 1980	.651848
Hong Kong dollar:	
December 22, 1980	$0.195503
December 23–24, 1980	.196464
December 25, 1980	Holiday
December 26, 1980	.195046
Iran rial:	
December 22–26, 1980	Not available
Philippines peso:	
December 22–26, 1980	$0.1320
Singapore dollar:	
December 22, 1980	$0.475624
December 23–24, 1980	.477327
December 25, 1980	Holiday
December 26, 1980	.478927
Thailand baht (tical):	
December 22–26, 1980	$0.0484
Venezuela bolivar:	
December 22–26, 1980	$0.2329

(LIQ-3-01 O:C:E)

Dated: December 29, 1980.

GWENN KLEIN KIRSCHNER,
Acting Chief,
Customs Information Exchange.

(T.D. 81–11)

Foreign Currencies—Variances from Quarterly Rate

The following rates of exchange are based upon rates certified to the Secretary of the Treasury by the Federal Reserve Bank of New York, pursuant to section 522(c), Tariff Act of 1930, as amended (31 U.S.C. 372(c)), and reflect variances of 5 per centum or more from the quarterly rate published in T.D. 80–249 for the following countries. Therefore, as to entries covering merchandise exported on the dates listed, whenever it is necessary for Customs purposes to convert such currency into currency of the United States, conversion shall be at the following rates:

Austria schilling:	
December 29, 1980	$0.071994
December 30, 1980	.072359
December 31, 1980	.071865
Belgium franc:	
December 29, 1980	$0.031666
December 30, 1980	.031817
December 31, 1980	.031516
Denmark krone:	
December 29, 1980	$0.166528
December 30, 1980	.167070
December 31, 1980	.166389
France franc:	
December 29, 1980	$0.220289
December 30, 1980	.221092
December 31, 1980	.219901
Germany deutsche mark:	
December 29, 1980	$0.511509
December 30, 1980	.512295
December 31, 1980	.506714
Ireland pound:	
December 29, 1980	$1.8950
December 30, 1980	1.9050
December 31, 1980	1.8930
Italy lira:	
December 29–30, 1980	$0.001079
December 31, 1980	.001075
Netherlands guilder:	
December 29, 1980	$0.468823
December 30, 1980	.471032
December 31, 1980	.465116

Norway krone:	
December 29, 1980	$0.193143
December 30, 1980	.193686
December 31, 1980	.192957
Portugal escudo:	
December 29, 1980	$0.018815
December 30, 1980	.018868
December 31, 1980	.018797
Spain peseta:	
December 29, 1980	$0.012579
December 30–31, 1980	.012618
Sir Lanka rupee:	
December 29–30, 1980	$0.056402
December 31, 1980	Quarterly
Sweden krona:	
December 30, 1980	$0.228050
December 31, 1980	.228180
Switzerland franc:	
December 29, 1980	$0.563380
December 30, 1980	.565931
December 31, 1980	.559441

(LIQ–03–01 O:C:E)

Dated: December 29, 1980.

GWENN KLEIN KIRSCHNER,
Acting Chief,
Customs Information Exchange.

(T.D. 81–12)

Foreign Currencies—Daily Rates For Countries Not On Quarterly List

Rates of exchange based on rates certified to the Secretary of the Treasury by the Federal Reserve Bank of New York for the Brazil cruzeiro, People's Republic of China yuan, Hong Kong dollar, Iran rial, Philippines peso, Singapore dollar, Thailand baht (tical), and Venezuela bolivar

The Federal Reserve Bank of New York, pursuant to section 522(c), Tariff Act of 1930, as amended (31 U.S.C. 372(c)), has certified buying rates for the dates and foreign currencies shown below. The rates of exchange, based on these buying rates, are published for the information and use of Customs officers and others concerned

pursuant to part 159, subpart C, Customs Regulations (19 CFR 159, subpart C).

Brazil cruzeiro:	
December 29, 1980 through January 2, 1981	$0.0153
People's Republic of China yuan:	
December 29, 1980 through January 2, 1981	$0.651848
Hong Kong dollar:	
December 29, 1980	$0.195503
December 30, 1980	.195886
December 31, 1980	.195503
January 1, 1981	Holiday
January 2, 1981	.194742
Iran rial:	
December 29, 1980 through January 2, 1981	Not available
Philippines peso:	
December 29, 1980 through January 2, 1981	$0.1320
Singapore dollar:	
December 29, 1980	$0.478469
December 30–31, 1980	.477327
January 1, 1981	Holiday
January 2, 1981	.477783
Thailand baht (tical):	
December 29, 1980 through January 2, 1981	$0.0484
Venezuela bolivar:	
December 29, 1980 through January 2, 1981	$0.2329

(LIQ-3-01 O:C:E)

Dated: December 29, 1980.

GWENN KLEIN KIRSCHNER,
Acting Chief,
Customs Information Exchange.

(T.D. 81-13)

Quarterly Rates of Exchange

The table below lists rates of exchange, in U.S. dollars for certain foreign currencies, which are based upon rates certified to the Secretary of the Treasury by the Federal Reserve of New York under provisions of section 522(c), Tariff Act of 1930, as amended (31 U.S.C. 372(c)), for the information and use of Customs officers and others concerned pursuant to part 159, subpart C, Customs Regulations (19 CFR 159, subpart C).

QUARTER BEGINNING JANUARY 1, 1981 THROUGH MARCH 31, 1981

Country	Name of Currency	U.S. dollars
Australia	Dollar	$1.1802
Austria	Schilling	.071225
Belgium	Franc	.031486
Canada	Dollar	.836960
Denmark	Krone	.164908
Finland	Markka	.259403
France	Franc	.219058
Germany	Deutsche Mark	.506329
India	Rupee	.1267
Ireland	Pound	1.8785
Italy	Lira	.001068
Japan	Yen	.004938
Malaysia	Dollar	.451060
Mexico	Peso	.042845
Netherlands	Guilder	.465658
New Zealand	Dollar	.9615
Norway	Krone	.192493
Portugal	Escudo	.018744
Republic of South Africa	Rand	1.3410
Spain	Peseta	.012516
Sri Lanka	Rupee	.059701
Sweden	Krona	.227273
Switzerland	Franc	.558659
United Kingdom	Pound	2.3820

(LIQ-3-01 O:C:E)

Dated January 2, 1980.

GWENN KLEIN KIRSCHNER,
Acting Chief,
Customs Information Exchange.

U.S. Customs Service

Proposed Rulemaking

(521854)

Extension of Time for Comments Concerning Proposed Change of Practice Relating to the Classification of Three-Wheel All-Terrain Vehicles

AGENCY: U.S. Customs Service, Department of the Treasury.

ACTION: Notice of extension of time for comments.

SUMMARY: This document extends the period of time permitted for the submission of comments in response to the recent proposed change of practice relating to the classification of three-wheel all-terrain vehicles. This extension will permit the preparation and submission of more detailed comments by interested members of the public.

DATE: Comments must be received on or before February 27, 1981.

ADDRESS: Written comments (preferably in triplicate) should be addressed to the Commissioner of Customs, attention: Regulations and Information Division, U.S. Customs Service, 1301 Constitution Avenue NW., room 2426, Washington, D.C. 20229.

FOR FURTHER INFORMATION CONTACT: James A. Seal, Classification and Value Division, U.S. Customs Service, 1301 Constitution Avenue NW., Washington, D.C. 20229; 202–566–5558.

SUPPLEMENTARY INFORMATION:

BACKGROUND

On November 28, 1980, the Customs Service published in the Federal Register (45 F.R. 79221), notice that the Service is reviewing a uniform and established practice concerning the classification of three-wheel all-terrain vehicles. The Customs Service currently classifies the subject vehicles under the provision for other motor vehicles (except motorcycles) for the transport of persons or articles in item 692.10, Tariff Schedules of the United States (TSUS). The proposed

change of practice would result in the reclassification of these vehicles under the provisions for motorcycles in item 692.50 (TSUS).

COMMENTS

Customs has received a request from a motor vehicle manufacturer to extend the period of time for the submission of comments in order to prepare a more detailed response. Therefore, the period of time for submission of comments is extended to February 27, 1981.

Dated: December 22, 1980.

DONALD W. LEWIS,
Director, Office of
Regulations and Rulings.

[Published in Federal Register, Jan. 12, 1981 (46 F.R. 2766)]

ERRATUM

In CUSTOMS BULLETIN, Volume 14, No. 50, dated December 10, 1980, in T.D. 80-283 the following rate should be corrected.

Hong Kong dollar:
November 12, 1980 ..... $0. 196155

(LIQ-03-01 O:C:E)

Dated December 24, 1980.

GWENN KLEIN KIRSCHNER,
Acting Chief,
Customs Information Exchange.

United States Court of International Trade

One Federal Plaza
New York, N.Y. 10007

Chief Judge

Edward D. Re

Judges

Paul P. Rao
Morgan Ford
Scovel Richardson
Frederick Landis
James L. Watson
Herbert N. Maletz
Bernard Newman
Nils A. Boe

Senior Judge

Samuel M. Rosenstein

Clerk

Joseph E. Lombardi

Decisions of the United States Court of International Trade

Abstracts

Abstracted Reappraisement Decisions

DEPARTMENT OF THE TREASURY,
December 29, 1980.

The following abstracts of decisions of the U.S. Court of International Trade at New York are published for the information and guidance of officers of the Customs and others concerned. Although the decisions are not of sufficient general interest to print in full, the summary herein given will be of assistance to Customs officials in easily locating cases and tracing important facts.

ROBERT E. CHASEN,
Commissioner of Customs.

DECISION NUMBER	JUDGE & DATE OF DECISION	PLAINTIFF	COURT NO.	BASIS OF VALUATION	HELD VALUE	BASIS	PORT OF ENTRY AND MERCHANDISE
R80/421	Watson, J. December 22, 1980	Geigy Chemical Corporation	R65/3439	United States value	U.S. selling prices, less 1% cash discount as determined by Customs officer at time of appraisement; less 25.3% representing profit and general expenses usually made in U.S. on sales of dyestuffs of same class or kind; less costs of transportation and insurance from place of shipment to place of delivery in amounts determined by Customs officer at time of appraisement; divided by 1.40 or such other factor applied by Customs officer, to allow for Customs duties payable on imported dyestuffs	U.S. v. Geigy Chemical Corporation et al. (C.A.D. 1155)	New York Benzenoid dyestuffs

R60/22	Watson, J. December 22, 1960	Geigy Chemical Corporation	R65/1942, etc,	United States value	U.S. selling prices, less 1% cash discount as determined by customs officer at time of appraisement; less 33.4% representing profit and general expenses usually made in U.S. on sales of dyestuffs of same class or kind; less costs of transportation and insurance from place of shipment to place of delivery in amounts determined by customs officer at time of appraisement; divided by 1.40 or such other factor applied by customs officer, to allow for customs duties payable on imported dyestuffs	U.S. v. Geigy Chemical Corporation et al. (C.A.D. 1155)	New York Benzenoid dyestuffs

DECISION NUMBER	JUDGE & DATE OF DECISION	PLAINTIFF	COURT NO.	BASIS OF VALUATION	HELD VALUE	BASIS	PORT OF ENTRY AND MERCHANDISE
R60/23	Watson, J. December 22, 1960	Geigy Chemical Corporation	R65/19666, etc.	United States value	U.S. selling prices, less 1% cash discount as determined by customs officer at time of appraisement; less 33.4% representing profit and general expenses usually made in U.S. on sales of dyestuffs of same class or kind; less costs of transportation and insurance from place of shipment to place of delivery in amounts determined by customs officer at time of appraisement; divided by 1.40 or such other factor applied by customs officer, to allow for customs duties payable on imported dyestuffs	U.S. v. Geigy Chemical Corporation et al. (C.A.D. 1185)	New York Benzenoid dyestuffs

R80/424	Watson, J. December 22, 1980	Geigy Chemical Corporation	R65/20980, etc.	United States value	U.S. selling prices, less 1% cash discount as determined by customs officer at time of appraisement; less 25.3% representing profit and general expenses usually made in U.S. on sales of dyestuffs of same class or kind; less costs of transportation and insurance from place of shipment to place of delivery in amounts determined by customs officer at time of appraisement; divided by 1.40 or such other factor applied by customs officer, to allow for customs duties payable on imported dyestuffs	U.S. v. Geigy Chemical Corporation et al. (C.A.D. 1155)	New York Benzenoid dyestuffs

DECISION NUMBER	JUDGE & DATE OF DECISION	PLAINTIFF	COURT NO.	BASIS OF VALUATION	HELD VALUE	BASIS	PORT OF ENTRY AND MERCHANDISE
R89/125	Watson, J. December 22, 1989	Geigy Chemical Corporation	R85/2162	United States value	U.S. selling prices, less 1% cash discount as determined by customs officer at time of appraisement; less 32.6% representing profit and general expenses usually made in U.S. on sales of dyestuffs of same class or kind; less costs of transportation and insurance from place of shipment to place of delivery in amounts determined by customs officer at time of appraisement; divided by 1.40 or such other factor applied by customs officer, to allow for customs duties payable o imported dyestuffs	U.S. v. Geigy Chemical Corporation et al. (C.A.D. 1156)	New York Benzenoid dyestuffs

R80/426	Watson, J. December 22, 1980	Geigy Chemical Corporation	R65/22914	United States value	U.S. selling prices, less 1% cash discount as determined by customs officer at time of appraisement; less 25.3% representing profit and general expenses usually made in U.S. on sales of dyestuffs of same class or kind; less costs of transportation and insurance from place of shipment to place of delivery in amounts determined by customs officer at time of appraisement; divided by 1.40 or such other factor applied by customs officer, to allow for customs duties payable on imported dyestuffs	U.S. v. Geigy Chemical Corporation et al. (C.A.D. 1155)	New York Benzenoid dyestuffs

DECISION NUMBER	JUDGE & DATE OF DECISION	PLAINTIFF	COURT NO.	BASIS OF VALUATION	HELD VALUE	BASIS	PORT OF ENTRY AND MERCHANDISE
R80/427	Watson, J. December 22, 1980	Geigy Chemical Corporation	R66/02125	United States value	U.S. selling prices, less 1% cash discount as determined by customs officer at time of appraisement; less 25.3% representing profit and general expenses usually made in U.S. on sales of dyestuffs of same class or kind; less costs of transportation and insurance from place of shipment to place of delivery in amounts determined by customs officer at time of appraisement; divided by 1.40 or such other factor applied by customs officer, to allow for customs duties payable on imported dyestuffs	U.S. v. Geigy Chemical Corporation et al. (C.A.D. 1155)	New York Benzenoid dyestuffs

R60/438	Watson, J. December 22, 1980	Geigy Chemical Corporation	R66/00324	United States value	U.S. selling price, less 1% cash discount as determined by Customs officer at time of appraisement; less 23.5% representing profit and general expenses usually made in U.S. on sales of dyestuffs of same class or kind; less costs of transportation and insurance from place of shipment to place of delivery in amounts determined by Customs officer at time of appraisement; divided by 1.40 or such other factor applied by Customs officer, to allow for Customs duties payable on imported dyestuffs	U.S. v. Geigy Chemical Corporation et al. (C.A.D. 1155)	New York Benzenoid dyestuffs

DECISION NUMBER	JUDGE & DATE OF DECISION	PLAINTIFF	COURT NO.	BASIS OF VALUATION	HELD VALUE	BASIS	PORT OF ENTRY AND MERCHANDISE
R80/429	Watson, J. December 22, 1980	Geigy Chemical Corporation	R66/13744, etc.	United States value	U.S. selling prices, less 1% cash discount as determined by customs officer at time of appraisement; less 25.3% representing profit and general expenses usually made in U.S. on sales of dyestuffs of same class or kind; less costs of transportation and insurance from place of shipment to place of delivery in amounts determined by customs officer at time of appraisement; divided by 1.40 or such other factor applied by customs officer, to allow for customs duties payable on imported dyestuffs	U.S. v. Geigy Chemical Corporation et al. (C.A.D. 1155)	New York Benzenoid dyestuffs

R80/430	Watson, J. December 22, 1980	Geigy Chemical Corporation	R66/16367 etc.	United States value	U.S. selling prices, less 1% cash discount as determined by Customs officer at time of appraisement; less 23.5% representing profit and general expenses usually made in U.S. on sales of dyestuffs of same class or kind; less costs of transportation and insurance from place of shipment to place of delivery in amounts determined by Customs officer at time of appraisement; divided by 1.40 or such other factor applied by Customs officer, to allow for Customs duties payable on imported dyestuffs	U.S. v. Geigy Chemical Corporation et al. (C.A.D. 1155)	New York Benzenoid dyestuffs

DECISION NUMBER	JUDGE & DATE OF DECISION	PLAINTIFF	COURT NO.	BASIS OF VALUATION	HELD VALUE	BASIS	PORT OF ENTRY AND MERCHANDISE
R80/431	Watson, J. December 24, 1980	Geigy Chemical Corporation	R66/19177, ect.	United States value	U.S. selling prices, less 1% cash discount as determined by customs officer at time of appraisement; less 25.5% representing profit and general expenses usually made in U.S. on sales of dyestuffs of same class or kind; less costs of transportation and insurance from place of shipment to place of delivery in amounts determined by customs officer at time of appraisement; divided by 1.40 or such other factor applied by customs officer, to allow for customs duties payable on imported dyestuffs	U.S. v. Geigy Chemical Corporation et al. (C.A.D. 1155)	New York Benzenoid dyestuffs

R80/432	Watson, J. December 24, 1980	Geigy Chemical Corporation	R66/10189	United States value	U.S. selling price, less 1% cash discount as determined by customs officer at time of appraisement; less 23.5% representing profit and general expenses usually made in U.S. on sales of dyestuffs of same class or kind; less costs of transportation and insurance from place of shipment to place of delivery in amounts determined by customs officer at time of appraisement; divided by 1.40 or such other factor applied by customs officer, to allow for customs duties payable on imported dyestuffs	U.S. v. Geigy Chemical Corporation et al. (C.A.D. 1155)	New York Benzenoid dyestuffs

DECISION NUMBER	JUDGE & DATE OF DECISION	PLAINTIFF	COURT NO.	BASIS OF VALUATION	HELD VALUE	BASIS	PORT OF ENTRY AND MERCHANDISE
R80/433	Watson, J. December 24, 1980	Geigy Chemical Corporation	R65/21479	United States value	U.S. selling prices, less 1% cash discount as determined by Customs officer at time of appraisement; less 33.4% representing profit and general expenses usually made in U.S. on sales of dyestuffs of same class or kind; less costs of transportation and insurance from place of shipment to place of delivery in amounts determined by Customs officer at time of appraisement; divided by 1.40 or such other factor applied by Customs officer, to allow for Customs duties payable on imported dyestuffs	U.S. v. Geigy Chemical Corporation et al. (C.A.D. 1155)	New York Benzenoid dyestuffs

R66/434	Watson, J. December 22, 1966	Geigy Chemical Corporation	R66/23016	United States value	U.S. selling prices, less 1% cash discount as determined by customs officer at time of appraisement; less 33.4% representing profit and general expenses usually made in U.S. on sales of dyestuffs of same class or kind; less costs of transportation and insurance from place of shipment to place of delivery in amounts determined by customs officer at time of appraisement; divided by 1.40 or such other factor applied by customs officer, to allow for customs duties payable on imported dyestuffs	U.S. v. Geigy Chemical Corporation et al. (C.A.D. 1156)	New York Benzenoid dyestuffs

International Trade Commission Notices

Investigations by the U.S. International Trade Commission

DEPARTMENT OF THE TREASURY

The appended notices relating to investigations by the U.S. International Trade Commission are published for the information of Customs Officers and others concerned.

R. E. CHASEN,
Commissioner of Customs.

In the Matter of CERTAIN WET MOTOR CIRCULATING PUMPS AND COMPONENTS THEREOF	Investigation No. 337–TA–94

Notice of Investigation

AGENCY: U.S. International Trade Commission.

ACTION: Institution of an investigation pursuant to 19 U.S.C. 1337.

SUMMARY: Notice is hereby given that a complaint was filed with the U.S. International Trade Commission on November 20, 1980, under section 337 of the Tariff Act of 1930 (19 U.S.C. 1337), on behalf of Taco, Inc. 1160 Cranston Street, Cranston, R.I. 20920. The complaint was amended on November 21 and December 2, 1980. The amended complaint (hereinafter referred to as the complaint) alleges unfair methods of competition and unfair acts in the importation into the United States of certain wet motor circulating pumps and components thereof, or in their sale, because of the alleged infringement by such wet motor circulating pumps and components thereof of at least claims 1, 2, 3, 6, 8, 15, 19, and 20 of U.S. Letters Patent 3,264,653 and the alleged misappropriation of Taco's trade secrets. The complaint further alleges that the effect or tendency of such unfair methods of competition and unfair acts is to substantially injure an industry, efficiently and economically operated, in the United States.

The complainant requests the Commission to institute an investigation; during the investigation, to issue a temporary exclusion order on an expedited basis prohibiting importation of the articles in question

into the United States, except under bond, and to issue a temporary cease and desist order on an expedited basis forbiding Mr. Curtis V. Givan from disclosing or disseminating Taco's trade secrets; and, after the full investigation, to issue an order permanently excluding the articles in question from entry into the United States and to issue a cease and desist order permanently forbidding Curtis V. Givan from disclosing or disseminating Taco's trade secrets.

AUTHORITY: The authority for institution of this investigation is contained in section 337 of the Tariff Act of 1930 (19 U.S.C. 1337) and in section 210.12 of the Commission's Rules of Practice and Procedure (19 CFR 210.12).

SCOPE OF THE INVESTIGATION: Having considered the complaint, the U.S. International Trade Commission on December 18, 1980, ordered that—

(1) Pursuant to subsection (b) of section 337 of the Tariff Act of 1930 (19 U.S.C. 1337(b)), an investigation be instituted to determine whether there is reason to believe there is a violation and whether there is a violation of subsection (a) of section 337 in the unlawful importation of certain wet motor circulating pumps and components thereof into the United States, or in their sale, because of the alleged infringement by such wet motor circulating pumps and components thereof of claims 1, 2, 3, 6, 8, 15, 19, and 20 of U.S. Letters Patent 3,264,653 and the alleged misappropriation of Taco's trade secrets, the effect or tendency of which is to substantially injure an industry, efficiently and economically operated, in the United States;

(2) For the purpose of this investigation so instituted the following are hereby named as parties upon which this notice of investigation shall be served:

(a) The complainant is—

Taco, Inc.
1160 Cranston Street
Cranston, R.I. 20920

(b) The respondents are the following persons alleged to be in violation of section 337 upon whom the complaint is to be served:

Grundfos Pumps Corp.
2555 Clovis Avenue
Clovis, Calif. 93612

Grundfos A.S.
Bjerringbro
Denmark

Curtis V. Givan
2555 Clovis Avenue
Clovis, Calif. 93612

(c) The Commission investigative attorney, a party to this investigation, is—

Robert M. M. Seto
Unfair Import Investigations Division
U.S. International Trade Commission
701 E Street NW.
Washington, D.C. 20436; and

(3) For the investigation so instituted, Donald K. Duvall, Chief Administrative Law Judge, U.S. International Trade Commission, 701 E Street NW., Washington, D.C. 20436, shall designate the presiding officer.

SUPPLEMENTARY INFORMATION: Curtis V. Givan has been named a party respondent in this nvestigation because the allegations of the complaint warrant his inclusion.

With respect to complainant's request for expedition of the temporary relief hearing, action on such request is deferred to the presiding officer.

Responses must be submitted by the named respondents in accordance with section 210.21 of the Commission's Rules of Practice and Procedure (19 CFR 210.21). Pursuant to sections 201.16(d) and 210.21 (b) of the rules, such responses will be considered by the Commission if received not later than 20 days after the date of service of the complaint. Extensions of time for submitting a response will not be granted unless good and sufficient cause therefor is shown.

Failure of respondent to file a timely response to each allegation in the complaint and in this notice may be deemed to constitute a waiver of the right to appear and contest the allegations of the complaint and this notice, and to authorize the presiding officer and the Commission, without further notice to the respondent, to find the facts to be as alleged in the complaint and this notice and to enter both a recommended determination and a final determination containing such findings.

The complaint, except for any confidential information contained therein, is available for inspection during official working hours (8:45 a.m. to 5:15 p.m.) in the Office of the Secretary, U.S. International Trade Commission, 701 E Street NW., Washington, D.C. 20436; telephone 202-523-0161.

FOR FURTHER INFORMATION CONTACT: Robert M. M. Seto, Esq., Commission Investigative Attorney, Unfair Import Investigations Division, U.S. International Trade Commission; telephone 202-523-0419.

By order of the Commission.
Issued: December 23, 1980.

KENNETH R. MASON,
Secretary.

In the Matter of CERTAIN FOOD SLICERS AND COMPONENTS THEREOF	Investigation No. 337-TA-76

Notice of Commission Request for Comments Regarding Licensing Agreement

AGENCY: U.S. International Trade Commission.

ACTION: Request for comments from the public regarding licensing agreement.

SUMMARY: The Commission is presently considering whether to terminate Investigation 337-TA-76 as to respondent Crest Industries Corp. on the basis of a licensing agreement entered into by complainant Prodyne Enterprises Inc. and Crest. Termination of Crest would not end the investigation as three other respondents would remain. This notice requests comments from the public on the licensing agreement within 30 days of the publication of this notice in the Federal Register.

SUPPLEMENTARY INFORMATION: This investigation, pursuant to section 337 of the Tariff Act of 1930 (19 U.S.C. 1337), concerns alleged unfair acts in the importation and sale in the United States of certain food slicers. The unfair act specifically complained of is the infringement of claims of U.S. Letters Patent 3,766,817.

The Commission instituted this investigation on December 4, 1980 and published notice thereof in the Federal Register on December 21, 1979 (44 F.R. 75738). The notice named E. Mishan and Sons, Albert, E. Price, Inc., Crest Industries Corp., and Taiwan Timing Trading Co. as respondents.

On August 1, 1980 complainant Prodyne Enterprises, Inc., and respondent Crest Industries Corp. entered into a licensing agreement. Pursuant to the agreement, Prodyne agreed to grant Crest a license to practice the invention covered by U.S. Letters Patent 3,766,817, and to permit Crest to import up to 10,000 food slicing devices covered by the patent per year. The license is royalty free. In return, Crest agreed to withdraw from the active defense of Investigation No. 337-TA-76.

On September 10, 1980, Prodyne and the Commission investigative attorney submitted a joint motion for summary determination against Crest and two other respondents. The Commission has determined to deny the motion for summary determination as to all three respondents.

The Commission is presently considering whether to terminate the investigation as to Crest on the basis of the licensing agreement entered into by Crest and Prodyne.

WRITTEN COMMENTS REQUESTED

There will be no oral argument regarding the proposed termination of the investigation as to Crest. However, in order to discharge its statutory obligation to consider the public interest, the Commission seeks written comments from interested persons regarding the effects of terminating the investigation as to Crest on (1) the public health and welfare, (2) competitive conditions in the U.S. economy, (3) the production of like or directly competitive articles in the United States, and (4) U.S. consumers. All written comments must be filed with the Secretary to the Commission no later than 30 days after publication of this notice in the Federal Register. In addition, pursuant to 19 CFR section 210.14(a)(2), the Commission has requested comments from the Department of Health and Human Services, the Department of Justice the Federal Trade Commission, and the U.S. Customs Service on the effects of the proposed settlement agreement.

THE LICENSING AGREEMENT

A copy of the Prodyne/Crest licensing agreement follows this notice.

ADDITIONAL INFORMATION

The original and 19 true copies of all written submissions must be filed with the Secretary to the Commission, 701 E Street NW., Washington, D.C. 20436; telephone 202-523-0161. All comments must be filed no later than 30 days after publication of this notice in the Federal Register. Any person desiring to submit a document (or portion thereof) to the Commission in confidence must request in camera treatment. Such requests should be directed to the Secretary of the Commission and must include a full statement of the reasons why the Commission should grant such treatment. The Commission will either accept the submission in confidence or return it. All non-confidential written submissions will be available for public inspection in the Office of the Secretary.

FOR FURTHER INFORMATION CONTACT: Warren H. Maruyama, Esq., Office of the General Counsel, U.S. International Trade Commission, 701 E Street NW., Washington, D.C. 20436; telephone 202-523-0143.

By order of the Commission.

Issued: December 22, 1980.

KENNETH R. MASON,
Secretary.

LICENSE AGREEMENT

Agreement made as of August 1, 1980 by and between Prodyne Enterprises Inc., a corporation organized under the laws of the State of California and having its principal office at P.O. Box 212, Montclair, Calif. 91763 (hereinafter called Prodyne) and Crest Industries Corp., a corporation organized under the laws of State of New York and having a principal office at 593 Acorn Street, Deer Park, N.Y. 11729 (hereinafter called Crest).

Whereas, Prodyne is the owner of and has the right to grant licenses under U.S. Letters Patent No. 3,766,817, issued on October 23, 1973 (hereinafter called Patent Right);

Whereas, an Investigation No. 337–TA–76 by the U.S. International Trade Commission, Washington, D.C., directed at the importation of certain food slicers and components thereof, initiated upon a complaint by Prodyne and involving as one of the respondents, Crest; and

Whereas, the parties desire to resolve the conflict in the International Trade Commission and it is agreed that Crest will withdraw from active defense of this investigation upon the taking of a license upon the terms and conditions hereinafter set forth;

Now, therefore, in consideration of the premises and the performance of the covenants herein contained, it is agreed;

1. Prodyne warrants that it is the owner of the entire right, title and interest in and to the Patent Right and has a right to grant the within license.

2. Prodyne grants to Crest and Crest hereby accepts from Prodyne upon the terms and conditions hereinafter specified a nonexclusive and nonassignable license to practice the invention covered by the Patent Right in the United States in the manufacture, importation, use and sale of cheese slicing devices to the full end of the term for which the Patent Right is issued, unless sooner terminated as hereinafter provided.

3. The license shall be royalty free and no payment of any kind need be made by Crest to Prodyne with respect to the granting of this license.

4. Crest shall be entitled to import within the terms of the license granted up to 10,000 cheese slicing devices covered by the Patent Right per year. Prodyne shall give authorization to allow such importation by Crest when requested to do so by Crest.

5. Crest shall keep accurate books of account containing the quantity of cheese slicers covered by the Patent Right imported per year. Said books shall be kept by Crest at its usual places where its like books are kept and shall be open at all reasonable times for 1 year following the end of the calendar year to which they pertain, to the inspection by

an independent certified public accountant to whom Crest shall have no reasonable objection, retained by Prodyne for the purpose of verifying Crest's importation of said cheese slicers per year.

6. This constitutes the entire agreement between the parties with respect to the subject matter hereunder and supersedes all previous communications, representations, and agreements, either oral or written between the parties.

7. All notices shall be made by certified or registered mail addressed as first noted above unless written notification to the contrary shall be given.

8. This agreement shall be binding upon the successors or assigns of the parties hereto.

In witness whereof, the parties hereto have duly executed this agreement in duplicate as of the day and year first written above.

Dated: August 27, 1980.

PRODYNE ENTERPRISES, INC.,
By: CHRISTOPHER J. MCARDLE,
Vice President.

CREST INDUSTRIES CORP.,
By: HERBERT ADLER,
President.

Index

U.S. Customs Service

	T.D. No.
Treasury decisions:	
Customs Delegation Order No. 62	81–8
Extension of time for comments, etc.	
Foreign Currencies:	
Variances from quarterly rate, December 22–26, 1980	81–9
Daily rates not on quarterly list, December 22–26, 1980	81–10
Variances from quarterly rate, December 29–31, 1980	81–11
Daily rates not on quarterly list, December 29, 1980 through January 2, 1981	81–12
Certified quarterly rates	81–13
Valuation of imported merchandise, part 152, Customs Regulations	81–7

U. S. GOVERNMENT PRINTING OFFICE : 1981 O - 335-083

DEPARTMENT OF THE TREASURY
U.S. CUSTOMS SERVICE
WASHINGTON, D.C. 20229

OFFICIAL BUSINESS
PENALTY FOR PRIVATE USE, $300

POSTAGE AND FEES PAID
DEPARTMENT OF THE TREASURY (CUSTOMS)
(TREAS. 552)

15/4

Customs Bulletin

Regulations, Rulings, Decisions, and Notices concerning Customs and related matters

and Decisions

of the United States Court of Customs and Patent Appeals and the United States Court of International Trade

Vol. 15 JANUARY 28, 1981 No. 4

NEWARK PUBLIC LIBRARY

FEB 19 1981

U. S. GOVT. PUBS
DEPOSITORY 376

This issue contains

T.D. 81-14 through 81-16
C.S.D. 81-1 through 81-25
General Notice
Slip Op. 80-15 and 80-20
International Trade Commission Notices

THE DEPARTMENT OF THE TREASURY
U.S. Customs Service

T1.11/3:

NOTICE

The abstracts, rulings, and notices which are issued weekly by the U.S. Customs Service are subject to correction for typographical or other printing errors. Users may notify the U.S. Customs Service, Logistics Management Division, Washington, D.C. 20229, of any such errors in order that corrections may be made before the bound volumes are published.

For sale by the Superintendent of Documents, U.S. Government Printing Office, Washington, D.C. 20402. Price: $2.25 (single copy domestic); $2.85 (single copy foreign). Subscription price: $85.00 a year domestic; $106.25 a year foreign.

U.S. Customs Service

Treasury Decisions

(T.D. 81-14)

Coastwise Transportation—Customs Regulations Amended

Sections 4.93(b)(1) and 4.93(b)(2), Customs Regulations, amended to add the Polish People's Republic and Kuwait to the lists of nations whose registered vessels are permitted to transport certain articles coastwise

TITLE 19—CUSTOMS DUTIES

CHAPTER I—U.S. CUSTOMS SERVICE

PART 4—VESSELS IN FOREIGN AND DOMESTIC TRADES

AGENCY: U.S. Customs Service, Department of the Treasury.

ACTION: Final rule.

SUMMARY: This document amends the Customs Regulations to add the Polish People's Republic and Kuwait to the lists of nations which permit vessels of the United States to transport certain articles specified in section 27, Merchant Marine Act of 1920, as amended, between their ports. The Department of State has received satisfactory evidence that both the Polish People's Republic and Kuwait place no restrictions on the transportation of the specified articles by vessels of the United States between ports in those countries. This amendment provides reciprocal privileges for vessels registered in the Polish People's Republic and Kuwait.

EFFECTIVE DATES: May 14, 1980, as to vessels of the Polish People's Republic and May 16, 1980, as to vessels of Kuwait.

FOR FURTHER INFORMATION CONTACT: Donald H. Reusch, Carriers, Drawback and Bonds Division, U.S. Customs Service, 1301 Constitution Avenue NW., Washington, D.C. 20229; 202-566-5706.

SUPPLEMENTARY INFORMATION:

BACKGROUND

Section 27, Merchant Marine Act of 1920, as amended (46 U.S.C. 883) (the Act), provides generally that no merchandise shall be trans-

ported by water, or by land and water, between points in the United States except in vessels built in and documented under the laws of the United States and owned by U.S. citizens. However, the Act, as amended by Public Law 90–474 (82 Stat. 700; T.D. 68–227), provides that if the Secretary of State advises the Secretary of the Treasury that a foreign nation does not restrict the transportation of certain articles between its ports by vessels of the United States, reciprocal privileges will be accorded to vessels of that nation, and the prohibition against the transportation of those articles between points in the United States will not apply to its vessels.

Section 4.93(b)(1), Customs Regulations (19 CFR 4.93(b)(1)), lists those nations found to extend reciprocal privileges to vessels of the United States for the transportation of empty cargo vans, empty lift vans, and empty shipping tanks. The Polish People's Republic is among the countries listed. Those nations found to grant reciprocal privileges to vessels of the United States for the transportation of equipment for use with cargo vans, lift vans, or shipping tanks; empty barges specifically designed for carriage aboard a vessel and certain equipment for use with such barges; certain empty instruments of international traffic; and certain stevedoring equipment and material are listed in section 4.93(b)(2), Customs Regulations (19 CFR 4.93 (b)(2)).

On May 14, 1980, the Department of State advised the Secretary of the Treasury that the Polish People's Republic now places no restrictions on the transportation of equipment for use with cargo vans, lift vans, or shipping tanks; emply barges specifically designed for carriage aboard a vessel and certain equipment for use with such barges; certain empty instruments of international traffic; and certain stevedoring equipment and material by vessels of the United States between ports in that country. In addition, on May 16, 1980, the Department of State advised the Secretary of the Treasury that Kuwait places no restrictions on the transportation of any of the articles listed in the Act by vessels of the United States between ports in that country. Therefore, appropriate reciprocal privileges are to be accorded to vessels registered in the Polish People's Republic as of May 14, 1980, and to vessels registered in Kuwait as of May 16, 1980.

FINDING

On the basis of the information received from the Secretary of State, as described above, I find that the Governments of the Polish People's Republic and Kuwait place no restrictions on the transportation of the articles specified in section 27 of the Merchant Marine Act of 1920, as amended, by vessels of the United States between ports in those countries. Therefore, appropriate reciprocal privileges are accorded

to vessels registered in the Polish People's Republic as of May 14, 1980, and to vessels registered in Kuwait as of May 16, 1980.

AMENDMENTS TO THE REGULATIONS

To reflect the reciprocal privileges granted to vessels registered in Polish People's Republic and Kuwait, section 4.93(b)(1), Customs Regulations (19 CFR 4.93(b)(1)), is amended by inserting Kuwait in appropriate alphabetical order in the list of nations under that section. Section 4.93(b)(2), Customs Regulations (19 CFR 4.93(b)(2)), is amended by inserting Kuwait and Polish People's Republic in appropriate alphabetical order in the list of nations under that section.

(Sec. 27, 41 Stat. 999, as amended, sec. 14, 67 Stat. 516, Public Law 90–474, 82 Stat. 700 (5 U.S.C. 301, 19 U.S.C. 1322(a), 46 U.S.C. 883).)

INAPPLICABILITY OF PUBLIC NOTICE AND DELAYED EFFECTIVE DATE REQUIREMENTS

Because these are minor amendments in which the public is not particularly interested and there is a statutory basis for the described extension of reciprocal privileges, notice and public procedure pursuant to 5 U.S.C. 553(b)(B) are unnecessary. In accordance with 5 U.S.C. 553(d)(1), a delayed effective date is not required because these amendments grant an exemption.

REGULATION DETERMINED TO BE NONSIGNIFICANT

In a directive published in the Federal Register on November 8, 1978 (43 F.R. 52120), implementing Executive Order 12044, "Improving Government Regulations," the Treasury Department stated that it considers each regulation or amendment to an existing regulation published in the Federal Register and codified in the Code of Federal Regulations to be significant. However, regulations which are nonsubstantive, are essentially procedural, do not materially change existing or establish new policy, and do not impose substantial additional requirements or costs on, or substantially alter the legal rights or obligations of, those affected, with secretarial approval may be determined not to be significant. Accordingly, it has been determined that this document does not meet the Treasury Department criteria in the directive for significant regulations.

DRAFTING INFORMATION

The principal author of this document was James A. Seal, Regulations and Information Division, Office of Regulations and Rulings, U.S. Customs Service. However, personnel from other offices of the

Customs Service and the Departments of State and the Treasury participated in its development.

Dated: December 30, 1980.

RICHARD J. DAVIS,
Assistant Secretary of the Treasury.

[Published in the Federal Register, Jan. 19, 1981 (46 F.R. 5120)]

(T.D. 81-15)

Customs Approved Public Gauger

Approval of public gauger performing gauging under standards and procedures required by Customs

Notice is hereby given pursuant to the provisions of section 151.43 of the Customs Regulations (19 CFR 151.43) that the application of Pan Pacific Surveyors, Inc., 617 Avalon Boulevard, Wilmington, Calif. 90744, to gauge imported petroleum and petroleum products is all Customs districts in accordance with the provisions of section 151.43 of the Customs Regulations is approved.

Dated: January 12, 1981.

A. PIAZZA,
Director,
Entry Procedures and Penalties Division.

(T.D. 81-16)

Bonds

Approval to use authorized facsimile signatures and seals; T.D. 79-241 amended

The use of facsimile signatures and facsimile seals on Customs bonds by the following corporate sureties has been approved effective January 12, 1981. Each corporate surety has provided the Customs Service with a copy of each signature that is to be used, a copy of the corporate seal, and a certified copy of the corporate resolution agreeing to be bound by the facsimile signatures and seals and is without prejudice to each surety's right to affix signatures and seals manually.

Continental Casualty Co., Chicago, Ill.
Authorized facsimile signatures on file for:
John J. Sheppard, attorney-in-fact, witness.
John K. Daily, attorney-in-fact, witness.
James M. Gorman, attorney-in-fact, witness.

American Casualty Co., of Reading, Pa., Chicago, Ill.
John J. Sheppard, attorney-in-fact, witness.
John K. Daily, attorney-in-fact, witness.
James M. Gorman, attorney-in-fact, witness.
National Fire Insurance Co. of Hartford, Chicago, Ill.
John J. Sheppard, attorney-in-fact, witness.
John K. Daily, attorney-in-fact, witness.
James M. Gorman, attorney-in-fact, witness.

MARILYN G. MORRISON,
Director,
Carriers, Drawback and Bonds Division.

U.S. Customs Service

Customs Service Decisions

DEPARTMENT OF THE TREASURY,
OFFICE OF THE COMMISSIONER OF CUSTOMS,
Washington, D.C.

The following are decisions made by the U.S. Customs Service where the issues involved are of sufficient interest or importance to warrant publication in the CUSTOMS BULLETIN.

DONALD W. LEWIS,
Director,
Office of Regulations and Rulings.

(C.S.D. 81-1)

Classification: Unfinished Pipe Ells (Elbows); General Interpretative Rule 10(c); Forgings; Pipe Fittings

Date: May 23, 1980
File: CLA-2:RRUCGC
065046 E

Re Decision on application for further review of Protest No. 3901-8-000881 of September 11, 1978.

DISTRICT DIRECTOR OF CUSTOMS,
Chicago, Ill.

DEAR SIR: This protest was filed against your decision classifying merchandise covered by Entry No. 154851 of August 4, 1977, under the provision for pipe fittings of steel, other, in item 610.80, TSUS, with duty at the rate of 11 percent ad valorem. The protest, timely filed on September 11, 1978, claims that the merchandise consists of elbow forgings of steel, not machined, tooled, or otherwise processed after forging, and is properly classifiable under the provision for forgings of steel in item 608.25, TSUS dutiable at the rate of 6 percent ad valorem, citing *J. Gerber & Co., Inc. et al.* v. *United States*, 62 Cust. Ct. 368, C.D. 3773 (1969), aff'd 58 CCPA 110, C.A.D. 1013 (1971).

The merchandise involved is shown on the commercial invoice as consisting of standard 90 degree long radius ells, 8-inch, at a unit price of $11.34 per piece. Also on the commercial invoice and on the special customs invoice, the merchandise is described as "forgings as per sample submitted, not shot blasted, nor in any way advanced beyond the forging state, suitable to make standard 90 deg. long radius elbows, Spec. WPB."

In the appellate case cited by the protestant, there was no discussion as to what constitutes a forging, the court stating, "They are forgings, it is undisputed, and they are also dedicated for use as pipe or tube fittings of steel." The court did indicate, however, that the forgings it had in mind were articles produced by a process which was relatively expensive, requiring heavy equipment and skilled labor to produce a higher quality metal, and was used when less costly methods would not do. With respect to the production of the subject merchandise, the protestant states, "The elbow forging is produced from a piece of steel in a forging operation which consists of heating the steel and bending it to the desired shape of the elbow forging. Nothing further is done beyond this process."

Tubular steel elbows were the subject of *Herbert B. Moller and U.S. Wolfson Bros. Corp.* v. *United States*, 46 CCPA 89, C.A.D. 704 (1959), wherein the issue was whether the merchandise was classified as steel tubes or as articles not specially provided for, whether partly or wholly manufactured. The merchandise in that case consisted of seamless steel elbows bent to 45 and 90 degree angles. They were manufactured by heating a length of steel tubing, bending it to the desired angle, cutting to the desired length, beveling the ends, and then cleaning and painting. In use, the elbows were welded into a system of tubing for the transmission of liquids or gases.

This description of the manufacture of steel elbows from tubes coincides with information received from reputable sources in the forging industry, that the only method of manufacturing pipe ell forgings is by forging over preexisting tubing which is already a wrought product. We conclude, therefore, that the elbows involved are produced from a tube rather than a piece of steel as the protestant states. Further, the imported ells are not suitable to make standard ells, but to be finished into standard ells.

In Headquarters letter of March 11, 1977, (047541 DB), the view was expressed that unfinished pipe ells were properly classifiable as pipe or tube fittings, of iron or steel, other, in item 610.80, TSUS, and not under the provision for forgings of steel, not machined, not tooled, and not otherwise processed after forging, in item 608.25. The basis for that decision was that it was not the intent of Congress to classify tubes or articles made therefrom, fittings, as forgings, noting headnote

335-084 O -81 - 2

3(e), part 2, schedule 6, TSUS, and assuming that the unfinished ells were described in both provisions, the provision for pipe or tube fittings more specifically described the unfinished ells than did the provision for forgings.

Since the protestant relies on C.A.D. 1013, we deem it advisable to comment on the appellate opinion in that case to show that there are a number of distinguishing facts between the flanges which were the subject of that case and the unfinished 8-inch ells or elbows, as well as to comment on the basis of that opinion.

In C.A.D. 1013, it was undisputed that the merchandise consisted of forgings. If one follows the court's comment that "forging produces a higher quality metal and is used when less costly methods will not do," citing the Tariff Information Surveys (1921), and looks to the description of forgings as set forth in the Summary of Tariff Information 1921, which the U.S. Tariff Commission prepared for the Congress in enacting the Tariff Act of 1922, it would appear that the court may have understood the forging before it to be like that described in Summary as follows:

> Forgings are metals which have undergone the process of hammering or pressing into special shapes while hot. Originally forging was solely a hammering process, but with large masses to be treated, pressing has come into use, especially for making heavy forgings of steel.

The facts presented in this case indicate that the unfinished elbows were made from tubes by bending and there is no showing that they were made by a hammering process or pressing. In modern commercial practices, the term forging is very broad and refers to articles produced by the process of giving the metal increased utility by shaping it, refining it, and improving its mechanical properties through controlled plastic deformation under impact or pressure. It includes such processes as compression between flat dies, called upsetting, compression between narrow dies, rolling, impression die forging, extrusion, and piercing. Bending, which gives the imported merchandise its shape, is considered an auxiliary operation. (See Forging Industry Handbook.)

In C.A.D. 1013, the court discusses the doctrine of relative specificity in terms of which provision, forgings or pipe fittings, was the most difficult to satisfy. When TSUS was enacted in 1963, the drafters promulgated General Interpretative Rule 10(c), which specifies that when two provisions describe an article, it shall be classifiable under that provision which most specifically describes it. Comparing a provision for forgings, which only informs one concerning the process by which the article is made, with a provision for pipe fittings, which informs one of an article used in a certain manner for a certain purpose and describes a class of articles, there is no question but that the

provision for pipe fittings more specifically describes the unfinished elbows. The court in C.A.D. 1013 does not mention General Interpretative Rule 10(c).

It is true as the court states in C.A.D. 1013, that the provision for forgings has remained substantially unchanged since the act of 1909. However, what has changed through the years is the forging industry. The Forging Industry Handbook states:

> Metals previously thought unforgeable are now processed routinely. The refinement of manufacturing methods and the development of more efficient and larger production equipment have resulted in higher quality and greater economy in forgings spanning a continually increasing range of shapes and sizes.

The opinion in C.A.D. 1013 cites with approval as support for its conclusion, the case of *United States* v. *The Singer Mfg. Co.*, 37 CCPA 104, C.A.D. 427 (1950), involving rough castings of iron which were held to be classifiable as castings rather than as unfinished parts of machines. The difficulty with citing that decision is that it was not rendered under TSUS, and under TSUS is contrary to *John V. Carr & Son, Inc.* v. *United States*, 74 Cust. Ct. 10, C.D. 4580 (1975), holding unfinished hub castings to be classifiable as parts of machines and not as cast-iron articles, and under the circumstances, had C.A.D. 427 been decided under TSUS, the result would have been different. Furthermore, the appellate court under TSUS in *The Acme Shear Co.* v. *United States*, 63 CCPA 12, C.A.D. 1159 (1975), held that nonmalleable cast-iron articles in the form of unfinished shear blade castings which had not been processed beyond the casting state except for cleaning the excess metal were classifiable as unfinished shear blades and not as articles of iron. While the court distinguished C.A.D. 427, on the basis of different statutory language under the Tariff Act of 1930, and TSUS, the question remains as to why the Congress would want to treat forgings differently from castings, for both describe articles by the process used in making them, and both are most often dedicated to a particular use as a part of some machine.

With respect to the opinion in C.A.D. 1013 that the Congress has historically wanted forgings to be classed and dealt with as forgings, and has put into the new schedules nothing to state a contrary intention, the court overlooked headnote 1(iv), part 2, of schedule 6 (note C.A.D. 1098), the specific provision for tube fittings which was not in the Tariff Act of 1930, and General Interpretative Rule 10(c). Even under prior tariff acts, the court overlooked the case of *Redden* v. *United States*, 5 Ct. Cust. Appls. 485 (1915), which held that unfinished scissor blades fit for no other use than completion into scissors, were classifiable as unfinished scissor blades rather than as forgings. That case was decided under the Tariff Act of 1909 which provided for

forgings, not machined, tooled, or otherwise advanced in condition by any process or operation subsequent to the forging process, not specially provided for, and repudiates the statement that the Congress has historically wanted forgings to be classed and dealt with as forgings in preference to more specific provisions. As a matter of fact, the Tariff Act of 1930, and prior tariff acts, provided for forgings not specially provided for.

It has been held that where there is more persuasive evidence, the court recognizes that the better course rests with a reevaluation, not mere perpetuation. *William Adams, Inc.* v. *United States*, 56 Cust. Ct. 429, C.D. 2670 (1966), *Adolphe Hurst & Co., Inc.* v. *United States*, 33 CCPA 96, C.A.D. 322 (1946). This principle is applicable here.

In view of the foregoing, the 90 degree long radius ells are properly classifiable under the provision for pipe and tube fittings of steel, other, in item 610.80, TSUS, and not as forgings in item 608.25, TSUS.

Counsel for the protestant may be furnished a copy of this decision. The entry and related papers are attached.

(C.S.D. 81-2)

Classification: Four-Wheeled Vehicle Used to Move Logs

Date: May 23, 1980
File: CLA-2: RRUCGC
061799 BB

Re Decision on application for further review of Port Huron Protest No. 3802-8-000136 concerning classification of a tree farmer pulpwood porter.

Entry numbers	*Dates*	*Dates of liquidation*	*Date of protest*
78-673161	May 16, 1978	Sept. 15, 1978	Oct. 13, 1978
78-674150	June 14, 1978	----do----	Do.
78-686704	Apr. 11, 1978	Sept. 8, 1978	Do.
78-687545	May 3, 1978	Sept. 15, 1978	Do.

Facts.—The subject merchandise is described as a tree farmer C5D pulpwood porter. The specification sheet indicates the pulpwood porter is a four-wheeled vehicle used to move logs. The porter features a 100-horsepower engine, four wheel drive, a four-speed transmission and a 9-foot rear deck with two pairs of sideracks and headboards. The logs are carried on the rear deck. As optional equipment the porter can be fitted with a cranab loader for the logs.

Law and analysis.—
Classified under:
Schedule 6, Part 6, Subpart B

	* * * * * * *	
	Motor vehicles specially constructed and equipped to perform special services or functions, such as, but not limited to, fire engines, mobile cranes, wreckers, concrete mixers, and mobile clinics:	
	* * * * * * *	
692.16	Other	5% ad val. (now 4.8% ad val.)

Claimed under:
Schedule 6, Part 6, Subpart B

	* * * * * * *	
	Motor vehicles (except motorcycles) for the transport of persons or articles: Automobile trucks valued at $1,000 or more, and motor buses:	
	* * * * * * *	
692.03	If Canadian article	Free

Or alternatively:
Schedule 6, Part 6, Subpart B

	* * * * * * *	
	Tractors (except tractors in item 692.40 and except automobile truck tractors), whether or not equipped with power takeoffs, winches, or pulleys, and parts of such tractors:	
692.30	Tractors suitable for agricultural use, (now 692.34) and parts thereof	Free

This pulpwood porter was initially classified as a special purpose motor vehicle in item 692.16, Tariff Schedules of the United States (TSUS). After reviewing this protest we conclude that classification was not correct.

To be classified in item 692.16, TSUS, the vehicle must be equipped with a device that allows it to perform certain nontransport functions at the job site. For example, in *Border Brokerage Co., Inc.* v. *United States*, 65 Cust. Ct. 600, C.D. 4145 (1970), a mobile tree spar and yarder was classified in 692.15 (now 692.16), TSUS. The tree spar was 90-feet long and was positioned vertically at the job site via hydraulic jacks and guylines. It was used to maneuver logs on a clothesline-like device at the site. The spar was mounted on a tracked undercarriage along with a yarder frame and running boards. The yarder frame was used to hold logs when they were removed from the tree spar. The court held that the tree spar and yarder were dissimilar articles, that

only the tree spar was subject to protest, that the tree spar obviously was not a motor vehicle for the transport of articles and the protest was overruled.

In *The Carrington Co., United Geophysical Corp.* v. *United States*, 496 F. 2d 902, 61 CCPA 77, C.A.D. 1126 (1974), the court overruled the protest to classification of a mobile drill in item 692.16, TSUS. The court stated that both the transportation of special equipment to a job site and the operation of that equipment at the job site are the essential features of a vehicle classifiable in item 692.16, TSUS.

Applying these principles to the pulpwood porter, it appears that the porter is simply designed to hold logs and transport them away from the job site, like the yarder portion of the tree spar and yarder. This view is bolstered by the fact that the cranab loader for the porter is an optional item. We conclude, therefore, that the loading/unloading function is in furtherance of this vehicle's main purpose of transporting articles.

We also do not believe the porter is classifiable in item 692.30, TSUS, as a tractor suitable for agricultural use. In *United States* v. *Norman G. Jensen, Inc.* 64 CCPA 51, C.A.D. 1183, the court held that skidding logs on farms, including tree farms, could be considered an agricultural use, for tariff purposes. However, there was no question that the merchandise before the court in that case was a tractor. While the pulpwood porter may be suitable for agricultural use if used on a farm, including a tree farm, we believe it is a truck rather than a tractor.

A truck is a vehicle essentially designed to haul heavy articles while a tractor is designed to push or haul another vehicle, implement, or load. Logs are placed on the rear deck of the pulpwood porter and hauled. Therefore, we conclude it is not a tractor.

In Headquarters Ruling Letter (HRL) 053474, Customs held that an OSA 260 log forwarder was classifiable as an automobile truck in item 692.02, TSUS. In HRL 051711, Customs held that a model 667 log forwarder was classifiable in item 692.03 as a Canadian automobile truck. We conclude that the subject merchandise is indistinguishable from these log forwarders and should be classified accordingly. We note that HRL TC 434.1C, dated May 31, 1966, classified a similar piece of equipment in item 692.16, TSUS, and is in conflict with later rulings.

Holding.—We hold that the subject merchandise is properly classifiable under the provision for automobile trucks valued at $1,000 or more in item 692.03, TSUS, and assuming the requirements for being a Canadian article are met, can be entered free of duty. Accordingly, you are directed to allow the protest.

Because HRL TC 434.1C, dated May 31, 1966, is in conflict with this ruling, that decision is hereby revoked.

(C.S.D. 81-3)

Bonds: Right of Sureties to File Petitions

Date: June 4, 1980
File: BON-1-RRUCDB L 211023

Issues.—(1) Does a surety on a Customs bond have the right to petition for relief from a fine, penalty, or forfeiture incurred under any law administered by Customs, or from a claim for liquidated damages?

(2) If so, should the petition of the surety be accepted and denied in accordance with T.D. 78-374 (Legal Determination 3720-04)?

(3) If not, should the surety's petition be considered from the standpoint of the violation and the violator's maximum contingent liability?

(4) As a matter of general policy, should the district director routinely provide copies of the entry to the surety?

Facts.—There are no specific facts. The issues are raised in connection with the processing of petitions for relief from fines, penalties, forfeitures, or claims for liquidated damages.

Law and analysis.—A surety is one who engages to be responsible for the debt or default of another. Every suretyship contract involves three parties: (1) the one for whose account the contract is made, whose debt or default is the subject of the transaction, and who is called the principal; (2) the one to whom the debt or obligation runs, the obligee in suretyship, called the creditor; and (3) the one who agrees that the debt or obligation running from the principal to the creditor shall be performed, and who undertakes on his own part to perform it if the principal does not, called the surety.

The contract of suretyship is an undertaking to answer for the debt, default, or miscarriage of the principal by which the surety becomes bound in the same manner as, and equally with, the principal. It differs from a guaranty which is a collateral undertaking to pay in the event the debtor does not pay. So far as the creditor is concerned, in a contract of suretyship he may regard the surety as the principal debtor just as much as the one who actually is the principal. In the absence of limitations or restrictions contained in the contract, the liability of the surety is coextensive with that of the principal. 72 CJS, "Principal and Surety," section 87. A surety for the performance of a contract has a material interest in the rights and remedies to which the

creditor is entitled thereunder. Apart from statutory remedies, a surety's proper remedy at law to protect his rights ordinarily is to pay the debt and pursue the principal for reimbursement. 72 CJS, "Principal and Surety," section 286a.

The Customs Regulations, section 172.1(b) (19 CFR 172.1(b)), provide that the notice of liquidated damages incurred inform the principal and his sureties on the bond that application may be made for relief from payment of liquidated damages under section 623(c), Tariff Act of 1930, as amended (19 U.S.C. 1623(c)), or any other applicable statute authorizing the cancellation of any bond charge that may have been made against such bond.

In view of the fact that the law generally regards the surety's obligation to be the same as and coextensive with that of the principal, we interpret section 172.1 of the Customs Regulations to give both the principal and the surety the right to petition for relief.

T.D. 78–374 (Legal Determination 3720–04) relates to the filing of protests against the liquidation of entries under section 514, Tariff Act of 1930, as amended (19 U.S.C. 1514). It is not, in our view, relevant to the issue of a surety's right to petition for relief in a penalty or liquidated damages case. A petition for relief submitted by a surety in a penalty or liquidated damages case, if proper and timely, should be accepted. It should not be accepted and denied in accordance with T.D. 78–374.

The third issue is whether the surety's petition should be considered from the standpoint of the violation and the violator's maximum contingent liability. A contingent liability is one which is not fixed and absolute, but which will become so in case of the occurrence of some future and uncertain event. The surety's liability on the bond is limited to the face amount of the bond or, in the case of certain charges or demands for liquidated damages made against a term bond, for the amount of the single entry bond that would have been taken had the transaction been covered by a single entry bond. See, for example, sections 10.39(d)(1) and 113.45, Customs Regulations (19 CFR 10.39(d)(1) and 113.45).

Since the surety on the bond stands in the same position as the principal vis-a-vis the Government and is equally liable jointly and severally with the principal, a petition for relief from a surety should be treated in exactly the same manner as a petition for relief from the principal. If the facts submitted by a surety in a petition for relief would justify cancellation of the claim or other relief if submitted by the principal, the same degree of relief that would have been accorded the principal should be extended to the surety. Similarly, if no relief would have been warranted had the petition been submitted by the principal, none should be extended to the surety.

The final issue is whether, as a matter of general policy, the district director should routinely provide copies of the entry to the surety.

We believe the surety, as a party-in-interest, is entitled to request and receive copies of the bond and entry. It is pointed out that frequently the agent of the surety is a customhouse broker who also files the entry, that the broker is in possession of a copy of the entry, and that Customs is being called upon to perform clerical functions for those who have copies of the documents at their disposal.

In our view, there is no need to routinely provide copies of the bond and entry documents to the surety, although we believe this to be a policy matter within the discretion of the district director. If, however, the surety or other party-in-interest specifically requests these documents, we believe they must be produced. In such instances, we see no objection to billing the requester for the services performed at the prevailing rates.

Holding.—(1) The surety on a Customs bond has the right to petition for relief from any fine, penalty, forfeiture, or claim for liquidated damages incurred as a result of a breach of the bond.

(2) The petition of the surety should be accepted if proper and timely. It should not be denied in accordance with Treasury Decision 78–374 (Legal Determination 3720–04).

(3) The petition of a surety should be considered in the same manner as the petition of a principal.

(4) A surety who is a party-in-interest may be furnished with copies of the entry upon request and at the prevailing charge for providing such service. It is not believed necessary to routinely provide copies of the entry to the surety since the notice of penalty or liquidated damages incurred describes the violation. However, this is a matter within the discretion of the district director.

(C.S.D. 81–4)

In-Bond Carriers and Cartmen: Persons Eligible to Move Merchandise Within Port Limits

Date: June 4, 1980
File: BON–1–RRUCDB L 211288

Issue.—May in-bond merchandise be moved within port limits from the place or pier of unlading of the importing carrier to the place or pier where the merchandise will be loaded on the exporting vessel or conveyance by other than a licensed customhouse cartman?

Facts.—A customhouse broker files an immediate exportation entry,

335-084 O -81 - 3

supported by a bond for exportation or transportation or for transportation and exportation, Customs Form (CF) 7559, covering merchandise that must be moved within port limits from the place or pier of unloading of the importing carrier to the place or pier where the merchandise will be loaded on the exporting vessel or conveyance.

The customhouse broker wishes to move the merchandise by other than a licensed customhouse cartman and inserts a notation on CF 7512, transportation entry and manifest of goods, assuming full responsibility under the conditions of the bond on Customs Form 7559, for such liquidated damages and loss of revenue as may be incurred by failure to complete such transportation to the satisfaction of the district director.

Law and analysis.—Section 1565, title 19, United States Code, provides that:

> The cartage of merchandise entered for warehouse shall be done by cartmen to be appointed and licensed by the appropriate customs officer and who shall give a bond, in a penal sum to be fixed by such customs officer, for the protection of the Government against any loss of, or damage to, such merchandise while being so carted. The cartage of merchandise designated for examination at the appraiser's stores and of merchandise taken into custody by the customs officer as unclaimed shall be performed by such persons as may be designated, under contract or otherwise, by the Secretary of the Treasury, and under such regulations for the protection of the owners thereof and of the revenue as the Secretary of the Treasury shall prescribe.

Part 125, Customs Regulations (19 CFR 125), is concerned with the cartage and lighterage of merchandise and the duties and liabilities of cartmen and lightermen. Part 112, Customs Regulations (19 CFR 112), provides for the licensing of cartmen and lightermen.

A cartman is defined in section 112.1(b), Customs Regulations (19 CFR 112.1(b)), as one who undertakes to transport goods or merchandise within the limits of the port. Section 125.1, Customs Regulations (19 CFR 125.1), provides for two classes of cartage: (a) government cartage, which *must* be done by a licensed customhouse cartman and, (b) importers' cartage, which *may* be done by any licensed customhouse cartman. [Italic added.] Section 125.21, Customs Regulations, relating to cartage other than for examination, provides in part that any licensed cartman, *including an owner licensed to cart his own imported merchandise*, may transfer merchandise from the importing vessel or other conveyance to bonded warehouse, *from one vessel or conveyance to another*, from one bonded warehouse to another, from the public stores to a bonded warehouse, from warehouse for transportation or for exportation, and from an internal revenue warehouse for exportation under the internal revenue laws without pay-

ment of tax. [Italic added.] Section 125.23, Customs Regulations (19 CFR 125.23), provides in part that if an importer does not cart his merchandise (which, read with section 125.21, implies an importer licensed to cart his own imported merchandise) or designate a licensed cartman for the purpose, it shall be carted by a public store cartman authorized by contract or designated by the district director for that purpose.

We interpret the Customs Regulations to require that merchandise moved within port limits from one vessel or conveyance to another be moved by an importer licensed to cart his own imported merchandise, by a licensed customhouse cartman, or by an authorized public store cartman.

In view of our interpretation of the Customs Regulations, we do not address the question as to the sufficiency of the bond on Customs Form 7559 to cover such a movement.

Holding.—In-bond merchandise may be moved within port limits from one vessel or conveyance to another (except as provided for in section 18.3 and 125.12, Customs Regulations (19 CFR 18.3 and 125.12)), only by an importer licensed to cart his own merchandise, a licensed customhouse cartman, or an authorized public store cartman.

(C.S.D. 81-5)

TIB: Eligibility of Unconditionally Duty-Free Merchandise

Date: June 4, 1980
File: CON-1-RRUCDB WR 211680

Issues.—1. Whether unconditionally free merchandise may be entered for temporary importation under bond?

2. If unconditionally free merchandise is entered for temporary importation under bond, how is the amount of the bond determined?

Facts.—The inquirer raised the issues as a hypothetical problem.

Law and analysis.—Headnote 1(a), part 5C, schedule 8, Tariff Schedules of the United States (TSUS) (19 U.S.C. 1202), is the statutory basis for temporary importation of merchandise under bond. Headnote 1, schedule 8, TSUS (19 U.S.C. 1202), provides thai any article which is described in any provision of schedule 8 is classifiable in that provision if the applicable statutory requirements and regulations are met. That is, an article meeting the requirements of a schedule 8 provision is entitled to be entered under that provision notwithstanding any other provision in the first seven schedules. Tariff Classification Study, schedule 8, page 2, (November 15, 1960).

There is nothing in the Customs Regulations which specifically prohibits a temporary importation under bond entry of unconditionally duty-free merchandise.

There is a bond problem. Under section 10.31(f), Customs Regulations (19 CFR 10.31(f)), the bond used to secure a temporary importation entry is based on the amount of duty that would accrue had the imported merchandise been entered for consumption. That same basis for computing the amount of a temporary importation bond is set forth in section 113.14(K)(1), Customs Regulations (19 CFR 113.14-(K)(1)).

Holdings.—1. Unconditionally duty-free merchandise is entitled to be temporarily imported under bond.

2. Sections 10.31(f) and 113.14(K)(1), Customs Regulations (19 CFR 10.31(f) and 113.14(K)(1)) apply to dutiable and conditionally free merchandise temporarily imported under bond. A bond used to secure the temporary importation of unconditionally duty-free merchandise is to be set at an amount, in the opinion of the district director, that will be sufficient to guarantee compliance with the requirements of the statute and regulations.

(C.S.D. 81–6)

TIB: Acceptability of Drawback Procedures as Proof of Exportation

Date: June 4, 1980
File: CON–9–RRUCDB MM 211665

Issues.—(1) Whether documentation accepted as proof of exportation for drawback claims is also acceptable as proof of exportation for canceling temporary importation bonds.

(2) Whether an affidavit from the forwarder at a border port may be accepted in lieu of a bill of lading when no bill of lading has been issued to cover the exportation.

Facts.—This inquiry involves three temporary importation entries and the documentation submitted to establish proof of exportation. With regard to the first two entries, an uncertified notice of exportation supported by a signed ocean bill of lading was filed to establish exportation but was rejected at the Customs port because the notice was not certified or dated by Customs. An appeal was denied by the District Director on the grounds that provisions for temporary importations and drawback are not interchangeable.

The third entry involved merchandise which was exported to Mexico and for which an export bill of lading was not issued. An affidavit from the forwarder at the border port was furnished with the export documentation as proof of exportation but was rejected by Customs.

The inquirer is relying on C.I.E. 1414/59, dated October 12, 1959, as authority for acceptance of the drawback export procedure in connection with temporary importation entries, and T.D. 51271 as authority to accept the forwarder's affidavit when no bill of lading can be obtained.

Law and analysis.—The inclusion of processes which result in articles manufactured or produced as provided by the May 18, 1958, amendment to section 308(1), Tariff Act of 1930, as amended, now item 864.05, Tariff Schedules of the United States, posed problems for both the manufacturer and Customs with respect to physical examination of the finished articles upon exportation. In answer to this, headquarters set forth in C.I.E. 1414/59 entry and export procedures for use in appropriate cases involving merchandise entered for processing under section 308(1).

In issuing C.I.E. 1414/59 headquarters decided that if the procedure used in drawback was adequate to support disbursement of millions of dollars of drawback payments it was also adequate to support cancellation of temporary importation bonds.

C.I.E. 1414/59 permits the District Director to examine articles exported to cancel temporary importation bonds to the extent necessary to protect the revenue. In these cases appropriate instructions must be given to the importer at the time of importation.

With respect to the second issue, since it has been determined that drawback procedures for exportation can be appropriately applied to temporary importation procedures for exportation purposes, the use of an affidavit as set forth in T D. 51271 may also be followed in establishing proof of exportation to cancel temporary importation bonds. Headquarters has also authorized the acceptance of affidavits in lieu of a bill of lading when no such documentation can be obtained in accordance with section 22.29(d) of the regulations dealing with the exportation of rejected merchandise.

A proposal to revise part 10 of the Customs Regulations to incorporate the substance of C.I.E. 1414/59, T.D. 51271, and this ruling is being prepared.

Holding.—(1) The documentation provided in section 22.7 of the Customs Regulations providing evidence of exportation for drawback claims may also be accepted as proof of exportation for purposes of canceling temporary importation bonds.

(2) A forwarder's affidavit at a border port may be accepted in lieu of a bill of lading, when no bill of lading is issued, in accordance with the provisions set forth in T.D. 51271.

Effect on other rulings.—Affirms C.I.E. 1414/59 and T.D. 51271.

(C.S.D. 81–7)

Drawback: Recasting of Metal in Gold Chains into Ingots; Manufacture or Production under 19 U.S.C. 1313(a)

Date: June 6, 1980
File: DRA-1-RRUCDB MM
211545

Issue.—Whether the melting of gold chains and subsequent casting of the metal into limited edition gold collectors' ingots constitutes a manufacture or production for the purposes of title 19, United States Code, section 1313(a).

Facts.—Gold chains which were imported for sale as jewelry were found to be unmarketable. The importer proposes to melt the gold chains down and cast gold ingots in order to participate in the market for collector-size gold ingots. After the ingots are removed from the mold they will be stamped with the importer's logo, the quality and weight, and serialized for identification as limited editions.

Law and analysis.—Title 19, United States Code, section 1313(a), provides for drawback upon the exportation of articles which have been manufactured or produced in the United States with the use of imported merchandise. A manufacture or production has been defined as a process which changes or transforms an article into a new and different article having a distinctive name, character or use.

Headquarters has previously allowed drawback on articles manufactured with the use of material which was recovered from unmarketable products. One such case, published as T.D. 55599(5), concerned orisul used in the manufacture of tablets which were found not to be in compliance with the requirements of the Food and Drug Administration. Headquarters determined that the orisul could be recovered and reused in the manufacture of orisul triturate mixture for exportation with the benefit of drawback.

In the present case, the gold content of the chains would be reused to produce collectors' ingots. Such a procedure is considered to be an upgrading of the imported merchandise since it advances the value of the merchandise.

Holding.—The melting of gold chains and subsequent casting of the metal into limited edition gold collectors' ingots constitutes a manu-

facture or production under title 19, United States Code, section 1313(a), upon compliance with the applicable law and regulations.

(C.S.D. 81-8)

Foreign Trade Zones: Change in Status of Merchandise; Eligibility for Entry Into Customs Bonded Warehouse

Date: June 9, 1980
File: FOR-1-RRUCDB L 211198

Issues.—1. May foreign crude oil admitted into a foreign-trade zone (FTZ) for manufacture into petroleum products be changed from the status of nonprivileged foreign merchandise to privileged foreign merchandise?

2. May the manufactured petroleum products with the status of privileged foreign merchandise be entered into a Customs bonded warehouse and subsequently withdrawn for use in supplying bonded aviation or marine fuel to aircraft or ships departing on international flights or voyages?

Facts.—A domestic company now manufactures petroleum products from foreign source crude oil in an FTZ. The finished products are nonprivileged foreign merchandise. A portion of the finished products is imported into Customs territory, a portion is exported to foreign countries, and a portion is exported as bonded fuel for use by aircraft and ships in international traffic.

It is proposed to change that status of the foreign crude oil admitted to the FTZ from nonprivileged foreign merchandise to privileged foreign merchandise. That portion of the finished petroleum product, with the status of privileged foreign merchandise, that is to be sold as bonded aviation or marine fuel for use in international traffic, would be transferred from the FTZ and entered into a Customs bonded warehouse. The product transferred from the FTZ to a Customs bonded warehouse would be used solely as bonded fuel in international traffic and would not be entered into the commerce of the United States.

Law and analysis.—The first proviso of section 81c, Foreign-Trade Zones Act of 1934 (19 U.S.C. 81c), provides in part:

> That whenever the privilege shall be requested and there has been no manipulation or manufacture effecting a change in tariff classification, the appropriate Customs officer shall take under supervision any lot or part of a lot of foreign merchandise in a zone, cause it to be appraised and taxes determined and duties liquidated thereon. Merchandise so taken under supervision may be stored, manipulated, or manufactured under the supervision

and regulations prescribed by the Secretary of the Treasury, and whether mixed or manufactured with domestic merchandise or not, may, under regulations prescribed by the Secretary of the Treasury, and whether mixed or manufactured with domestic merchandise or not may, under regulations prescribed by the Secretary of the Treasury, be exported or destroyed, or may be sent into Customs territory upon the payment of such liquidated duties and determined taxes thereon.

Nonprivileged foreign merchandise is defined in part in section 146.23(a), Customs Regulations (19 CFR 146.23(a)), as foreign merchandise properly in a zone which does not have the status of privileged foreign merchandise or of zone-restricted merchandise. Privileged foreign merchandise, as defined in section 146.21(a), Customs Regulations, is foreign merchandise which has not been manipulated or manufactured so as to effect a change in tariff classification and upon proper application to the district director has been given status as privileged foreign merchandise.

Assuming that the application for privileged status is proper and is made prior to transfer of the crude oil to Customs territory and prior to a manipulation or manufacture which would effect a change in its tariff classification, we see no objection to approving an application to change the status of the foreign crude oil from nonprivileged foreign to privileged foreign.

The second issue is whether that portion of the finished petroleum product with privileged foreign status that is destined for use as bonded aviation or marine fuel for aircraft or ships departing in international traffic may be transferred from the FTZ and entered into a Customs bonded warehouse.

Section 309, Tariff Act of 1930 (19 U.S.C. 1309), provides in part that supplies for certain vessels and aircraft may be withdrawn from any Customs bonded warehouse or from a foreign-trade zone free of duty and internal revenue tax.

Section 557, Tariff Act of 1930, as amended (19 U.S.C. 1557), provides in part that any merchandise subject to duty, with certain exceptions not relevant here, may be entered for warehousing and be deposited in a bonded warehouse at the expense and risk of the owner, importer, or consignee.

Section 146.48(c), Customs Regulations (19 CFR 146.48(c)), provides that articles may be transferred from a zone for entry for consumption or, *except in the case of articles composed of or derived in part from privileged foreign merchandise*, for entry for warehousing subject to the treatment specified in section 146.48(e). [Italic added.] Section 146.48(e) relates to appraisement and tariff classification.

Under the Customs Regulations, therefore, privileged foreign merchandise may not be transferred from an FTZ to a Customs bonded

warehouse. This regulation appears to be based upon the first proviso of 19 U.S.C. 81c, supra, which states in part that foreign merchandise may be "sent into Customs territory upon the *payment* of such liquidated duties and determined taxes thereon." [Italic added.] In other words, payment of duties may not be delayed by any mechanism, including deposit of merchandise in a Customs bonded warehouse.

In addition, we perceive possible administrative difficulties in two other areas if privileged foreign merchandise is entered for warehouse. Section 557, Tariff Act of 1930, as amended (19 U.S.C. 1557), limits the warehousing period to a time not exceeding 5 years from the date of importation. Date of importation would be the date of admission into the FTZ and not the date of entry for warehouse and would require notation of this fact. Second, should there be manipulation in warehouse of privileged foreign merchandise entered from an FTZ, resulting in a change in value or classification, there may be a conflict in determining the applicable value and rate of duty.

Holding.—1. Foreign crude oil admitted into an FTZ for manufacture into petroleum products may be changed from the status of nonprivileged foreign to privileged foreign merchandise provided the application for privileged foreign status is made prior to transfer to Customs territory and prior to a manipulation or manufacture which changes its tariff classification.

2. Privileged foreign merchandise may not be transferred from an FTZ and entered into a Customs bonded warehouse for subsequent duty and tax-free withdrawal as vessel supplies under 19 U.S.C. 1309, or for any other purpose. The Customs Regulations, in section 146.48(c), prohibit the entry for warehouse of articles composed of or derived in part from privileged foreign merchandise, reflecting the first proviso of 19 U.S.C. 81c, that privileged foreign merchandise may be sent into Customs territory upon the payment of liquidated duties and determined taxes.

(C.S.D. 81-9)

U.S. Value: Deductibility of Certain Charges Where Principal Market Is a Border Point

Date: June 24, 1980
File: CLA-2: RRUCV JV 065058

To: District Director of Customs, San Diego, Calif.
From: Director, Classification and Value Division.
Subject: Internal Advice Request No. 239/79.

This request concerns the appraisement of certain fresh asparagus imported from Mexico through the Port of Calexico, the principal

335-084 O - 81 - 4

market. The basis of appraisement is conceded to be U.S. value, section 402(c), Tariff Act of 1930 as amended.

Issues.—(1) Whether usual wholesale quantity should be taken into account in the calculation of the appraised value of the merchandise?

(2) Whether certain charges for Customs brokerage fees and freight from the border to the importer's premises in Calexico constitute allowable deductions under section 402(c)(1)(2)?

Background.—As you know, the principal issue here, that of usual wholesale quantity, is currently the subject of a penalty action at headquarters under District Case No. 75-2503-10423, involving the same importer. The penalty case, however, covers entries of fresh asparagus for the 1973-74 harvest seasons, while the internal advice covers entries in 1975 to date. We note that the exhibits and corresponding documents filed with this request refer solely to importations and sales made in 1973-74. According to counsel for the importer, sales information for 1975 and beyond has not been compiled. Without such information, we are unable to comment at this time on whether or not a usual wholesale quantity exists for those years. Counsel has advised us that it will take some time to compile the required data and, if necessary, will file a separate request for internal advice.

We understand that the appraising officer in Calexico is currently dutying freight charges from the border crossing in the principal market in Calexico to the importer's warehouse, also located in the principal market. It is counsel's postion, citing the case of *E. H. Corrigan* v. *United States*, R.D. 8278 (1954), that such charges are properly deductible from the U.S. selling price of merchandise, inasmuch as they represent the usual costs of transporting the goods from place of shipment to place of delivery.

Law and analysis.—U.S. value is defined in section 402(c) of the Tariff Act of 1930, as amended, as follows:

> (c) For the purposes of this section, the U.S. value of imported merchandise shall be the price, at the time of exportation to the United States of the merchandise undergoing appraisement, at which such or similar merchandise is freely sold or, in the absence of sales, offered for sale in the principal market of the United States for domestic consumption, packed ready for delivery, in the usual wholesale quantities and in the ordinary course of trade, with allowances made for—
>
> (1) any commission usually paid or agreed to be paid, or the addition for profit and general expenses usually made, in connection with sales in such market of imported merchandise of the same class or kind as the merchandise undergoing appraisement;
>
> (2) the usual costs of transportation and insurance and other usual expenses incurred with respect to such or similar merchandise from the place of shipment to the place of

delivery, not including any expense provided for in subdivision (1) of this subsection; * * *

R.D. 8278, supra, involved merchandise which was exported from Mexico through the Port of Laredo and proceeded overland to the principal market in New York City. Freight charges to the purshaser's place of business in or near New York City were allowed. Upon rehearing (R.D. 8295), however, the court clarified its position by adding that the "item deductible should be the cost of transport from Laredo to the terminal in New York, the principal market of the merchandise." This position is in accord with prior court rulings where freight charges were allowed only to the pier or central freight area in the principal market. See, for example, *Star Import Company* v. *United States*, R.D. 2370 (1932).

In the case of trucked merchandise, there are generally no central trucking depots. The merchandise is usually laden on through bills of lading and sent directly to an importer's premises. Nevertheless, for purposes of uniformity, some central point must be chosen as a place of delivery of such merchandise in the principal market. The court, in *United States* v. *E. H. Corrigan*, A.R.D. 67, addresses this point. "It is clear," the court stated, "that the intendment of the U.S. value statute is to find a value for merchandise in the principal market of the United States, less the duties, costs, expenses, and charges incurred in bringing it to that U.S. principal market from the foreign market.* * * There is nothing in the context of the statute which indicates that the place of delivery was to be a different place in each case.* * * Such a construction would create multiple values for such merchandise at the same time, and be inharmonious with the obvious purpose of the statute, which is to fix a value for merchandise at a definite time and in a definite place."

We consider the definite place in a situation where the principal market is located at a border point and where the merchandise is not trucked to a central depot to be the actual border crossing, analogous to the pier or railroad station in the principal market referred to in R.D. 2370, supra. Freight beyond that point would not be part of the allowable freight from the place of shipment to the place of delivery, and would be dutiable. T.D. 41318 supports this view and refers specifically to merchandise similar to that claimed by counsel. The court in that case disallowed items of teaming from the terminal to the warehouse as constituting expenses subsequent to the arrival of the merchandise at the place of delivery in the principal market. See also T.D. 41481.

It is our opinion, therefore, in cases where the principal market is located at a border point, the freight charges from the border to

the importer's premises or warehouse in the principal market are nonallowable charges occuring after the merchandise has been delivered to the principal market.

Regarding the deductibility of Customs brokerage charges, the courts appear to make a distinction between those charges incurred when the principal market is located at a border point as opposed to being located inland. In R.D. 8278, supra, and R.D. 8355 (*E. H. Corrigan* v. *United States* (1954)), the merchandise entered the United States at the Port of Laredo and proceeded to the principal market in New York City. Customs entry charges in R.D. 8355 were considered an allowable deduction in that they constituted usual expenses from the place of shipment to the place of delivery. The brokerage charges in R.D. 8278, however, were disallowed since they were charges to spice brokers rather than to Customs brokers, and thus, were not considered a usual expense of transporting the merchandise from place of shipment to place of delivery.

The case of *Hensel, Bruckman and Lohrbacher, Inc.* v. *United States*, R.D. 4209 (1938), on the other hand, involved merchandise imported from Germany to New York City, the principal market. The court in that case disallowed Customs brokerage fees as deductible since they occured after delivery of the merchandise at the dock in the principal market. Such charges, therefore, become a general expense of doing business rather than a usual expense from place of shipment to place of delivery, and would be allowable only if included in the general expense provision in section 402(c)(1). In this connection, see *United States* v. *Dalminter, Inc. & R.W. Smith*, A.R.D. 135 (1961).

It is our opinion that, in the instant case, the charge for Customs brokerage is not allowable as part of the usual cost of transportation in 402(c)(2) since it occurs after delivery in the principal market, nor can it be part of the general expense allowance in 402(c)(1), inasmuch as the merchandise is consigned and an allowance for commission has already been taken.

Holding.—In cases where the principal market is located at a border point, the freight charges from the border to the importer's premises or warehouse in the principal market are not deductible from the U.S. selling price of the merchandise undergoing appraisement.

A Customs brokerage fee which is incurred after delivery of the merchandise in the principal market is not allowable as part of the usual cost of transportation in 402(c)(2), unless included in the general expense provision in section 402(c)(1). However, where the merchandise is consigned and an allowance for commission under 402(c)(1) has already been taken, the brokerage fee is not deductible under that subsection.

(C.S.D. 81-10)

Valuation: Determining Country of Exportation

Date: June 24, 1980
File: CLA-2:RRUCV
061584 BS

Re Protest No. 3004-8-000111; Application for Further Review

DISTRICT DIRECTOR OF CUSTOMS,
Seattle, Wash.

DEAR SIR: The issue involved in the above-captioned matter is whether East Germany or Canada is the country of exportation. The parties are in agreement that statutory export value, section 402(b), Tariff Act of 1930, as amended, is the proper basis of appraisement.

The subject merchandise is a stereometrograph manufactured in East Germany and originally exported from that country and entered by (X corporation) through New York in February 1970 under a temporary importation bond. After the instrument was shown at exhibition, it was placed in storage in the United States.

In July 1972, while at a convention in Canada, a representative of (X) entered into an oral agreement with (an American corporation, A) for the sale of a stereometrograph. This agreement was confirmed in writing by letter dated August 7, 1972. The price to be paid for the instrument was $45,000 plus $9,000 in financing charges.

On September 20, 1972, the merchandise was shipped to (a distributor in Canada, Y), apparently the exclusive distributor in that country of instruments made by the East German manufacturer (Z). On October 16, 1972, while the article was still under bond, it was entered at the port of Blaine, Wash., for consignment to —.

In establishing statutory export value, the price at which such or similar merchandise is freely sold, or offered for sale, in the principal markets of the country of exportation must be ascertained.

The appraising officer was of the opinion that Canada was the country of exportation and therefore utilized the purchase price to (A), $45,000, as representing statutory export value. The supervisory import specialist at New York concurs, and is of the opinion that a contingency of diversion existed when the merchandise was shipped to Canada and could have been sold to any purchaser in that country.

On the other hand, the protestant contends that East Germany and not Canada is the country of exportation for statutory export value purposes, and that the freely sold or offered price is established by the price paid by (X) to (Z) ($17,165) which is also reflected in a published price list. Protestant argues that an enforceable agreement between (X) and the U.S. consignee had been entered into prior to exportation

of the instrument, and that the subject of the agreement was in fact the instrument exported by (X); that (X) exported the machine to Canada merely to satisfy its obligation under the temporary importation bond; and that under applicable law and regulation, there was no bond fide exportation from the United States to Canada since the necessary intent to unite the article to the mass of things belonging to some foreign country did not exist.

Section 113.55(a) of the Customs Regulations defines the term "exportation" for purposes of cancelling an exportation bond as "* * * a severence of goods from the mass of things belonging to this country with the intention of uniting them to the mass of things belonging to some foreign country. The shipment of merchandise abroad with the intention of returning it to the United States with a design to circumvent provisions of restriction or limitation in the tariff laws or to secure a benefit accruing to imported merchandise is not an exportation." For recent court approval of their definition in an appraisement context, see *National Sugar Refining Company* v. *United States*, C.D. 4849, March 27, 1980.

The record establishes that the subject instrument was exported to Canada after having been sold to a U.S. company only to satisfy the requirements under the temporary importation bond, and that there was no intention to unite the article with the mass of things in Canada. Therefore, there was no exportation from Canada as that term is defined in section 113.55(a). The regulation further provides that "Merchandise of foreign origin returned from abroad under these circumstances is dutiable according to its nature, weight, and value at the time of its original arrival in this country."

Under the circumstances, East Germany is the country of exportation for purposes of section 402(b), Tariff Act of 1930, as amended, and the price paid by (X) to (Z), $17,165, should be used as the appraised value.

Accordingly, you are directed to allow the protest in full.

(C.S.D. 81-11)

Export Value: Whether a Trigger Price May Support Export Value Under Section 402(b), Tariff Act of 1930, as Amended

Date: June 24, 1980
File: CLA-2:RRUCV
065077 TLL

AREA DIRECTOR, NEW YORK SEAPORT,
New York, N.Y.

DEAR SIR: This is in reply to an application for further review of New York protest 1001-9-012087, which was timely filed.

Issue.—Whether the use of a trigger price was a permissible method of establishing export value.

Facts.—The instant protest covers certain steel exported on June 24, 1978, and ordered on March 8, 1978. On May 15, 1978, a new set of trigger prices was announced 45 days prior to their effective date of July 1, 1978, for shipments after such date. Based on information received from various sellers and importers of steel, orders began to be submitted on or after May 15, 1978, which were in line with the trigger prices announced.

Protestant claims that the invoice value, less certain nondutiable charges, represents statutory export value. It is further stated that the importer is related to, but acts independent of, the seller and that the freely offered price is that price that appears on the commercial invoice. Protestant was unable to submit any evidence supporting this claim. The merchandise covered by this protest is galvanized steel coils which is not listed on the final list, T.D. 54521.

Your office points out that it has reviewed the value records for the time and product involved here. From CF 6431's sent to New York for value and classification, the following is noted: the first report was on a shipment to Hartford, Conn. This is identical merchandise as to what is being protested. The CF 6431 value report shows that the merchandise was pruchased on June 20, 1978, and exported on August 16, 1978. The prices reported are higher than those on the protested invoice. Although the sizes are different, your conclusion is that the prices were increased by the seller prior to the date of export of the merchandise under protest. Another CF 6431 on similar merchandise sold by another Korean exporter, ordered on June 29, 1978, and exported on July 17, 1978, indicates that this seller was using the May 15, 1978, trigger prices. Therefore, your office concluded that the merchandise was being ordered at trigger prices with a deduction granted for certain nondutiable charges.

Law and analysis.—Section 402(b) of the Tariff Act of 1930, as amended, provides:

> (b) Export value—For the purposes of this section, the export value of imported merchandise shall be the price, at the time of exportation to the United States of the merchandise undergoing appraisement, at which such or similar merchandise is freely sold or, in the absence of sales, offered for sale in the principal markets of the country of exportation, in the usual wholesale quantities and in the ordinary course of trade, for exportation to the United States, plus, when not included in such price, the cost of all containers and coverings of whatever nature and other expenses incidental to placing the merchandise in condition packed ready for shipment to the United States.

Essentially, section 402(b) requires us to find a "freely sold, or in the absence of sales, offered for sale" price in the principal markets of country of exportation for exportation to the United States at the

time of exportation. Thus, to the extent merchandise subject to trigger pricing represents such a price, it is possible to find export value. Of course, whether or not export value would exist in a particular set of circumstances is a question of fact which must be determined on a case by case basis. On the basis of the facts established here, the trigger price figures used represent export value. The fact that the prices were for future delivery is no bar to the finding of export value. Therefore, you are directed to deny the protest.

Holding.—Export value at the trigger price figure is the correct appraisement.

(C.S.D. 81-12)

Classification: Cast-Iron Replicas of Early American Banks; Suitability for Household Use

Date: June 25, 1980
File: CLA-2:RRUCGC
062709 jh

To: Area Director of Customs, New York, N.Y.

From: Director, Classification and Value Division.

Subject: Reconsideration on the classification of cast-iron mechanical banks.

In your memorandum of September 11, 1979 (CLA-2-S:C:DV/CST 53/208), you request that we reconsider our decision of July 15, 1977 (046524), in which we held that certain cast-iron banks were classifiable under the provision for articles not specially provided for, of a type for household use, of iron or steel, cast, coated, in item 653.85, Tariff Schedules of the United States (TSUS).

The merchandise in question consists of replicas of early American cast-iron banks. Each bank incorporates a mechanical movement which deposits or attempts to deposit a coin in the interior of the bank.

It is your opinion that item 653.85, TSUS, does not apply to these banks in view of C.A.D. 1149. In *The United States* v. *Parksmith Corp.*, 62 CCPA 76, C.A.D. 1149 (1975), the court held that small replicas of the Empire State Building and the Statue of Liberty were primarily decorative articles because they lacked any utilitarian purpose. Therefore, they were not the type of article suitable for household use. Your position is also based on the fact that attempts to deposit coins would very often be unsuccessful when using the mechanical feature. The interior of the articles is not smooth and straight and there is the

possibility that coins being deposited could get lodged in inaccessible areas.

It is our view that these banks are primarily decorative or collector's articles and would only rarely be used for utilitarian purposes. Accordingly, following the principle of C.A.D. 1149, these banks are classifiable under the provision for articles of iron or steel, not coated or plated with precious metal, cast-iron articles, not alloyed, not malleable, in item 657.09, TSUS, and entitled to duty-free entry. The decision letter of July 15, 1977 (046524), is hereby revoked.

(C.S.D. 81–13)

Classification: Eo Nomine Tariff Designation for Drapery Tieback

Date: July 11, 1980
File: CLA–2:RRUCGC
061861 PR

DISTRICT DIRECTOR OF CUSTOMS,
El Paso, Tex.

DEAR SIR: This is in reply to your request for internal advice, No. 256/79, concerning the tariff classification of drapery tiebacks.

Facts.—Two samples were received. One sample is an all textile tassel made of chainnette yarns of manmade fibers and apparently has no relationship to the instant inquiry. The other sample is a completed drapery tieback. It consists of a 2-yard length of double-ply cord of manmade fibers, both ends of which terminate in a single, rather elaborate tassel. The tassel is formed by a textile covered plastic barrel and 3-inch manmade fiber yarns which form a fringe. Prior to the attachment of the cord ends to the tassel, the cord was inserted through a plastic barrel-shaped textile covered cylinder which acts as a sleeve to adjust the tieback to the individual drape. The initiator of the internal advice request advises that the merchandise is also imported without the adjustment sleeve.

Issue.—The issue presented is whether the sample drapery tieback is classifiable under the provision for cords and tassels, in item 385.70, Tariff Schedules of the United States (TSUS), or under the provision for other ornamented furnishings, of manmade fibers in item 365.86, TSUS.

Law and analysis.—The Customs has twice previously ruled on virtually identical merchandise—in headquarters ruling letter 059300, dated September 21, 1978, and in internal advice request No. 192/78, 055485, dated March 15, 1979. In both instances, the Customs Service

935-084 O - 81 - 5

ruled that the drapery tiebacks were properly classifiable under the provisions for ornamented furnishings. The latter ruling contained an extensive discussion on why the instant merchandise is classifiable as a furnishing and not as an article not specially provided for. There was no indication in either ruling that the provision for cords and tassels was even considered.

If the provision for cords and tassels, item 385.70, TSUS, is determined to be applicable to the instant merchandise, then the merchandise would be classifiable in item 385.70, TSUS, since that provision is more specific than a competing provision for ornamented furnishings. See general headnote 10(c), TSUS.

The instant merchandise is made up primarily of a cord and a tassel. However, since both ends of the cord terminate in the single tassel and an adjustment sleeve has been added, the article is a completed drapery tieback. As imported, its identity is fixed with absolute certainty. No further manufacturing operations will take place. The question then derives as to whether the provision for cords and tassels was intended to cover completed articles of commerce.

The legislative history of item 385.70, TSUS, has been extensively researched by this office, going back to the introduction of the words "cords and tassels" in the Tariff Act of March 22, 1867. No indication of what Congress intended to include within that terminology has been discovered. However, the U.S. Court of Customs Appeals, in *Willenborg & Co.* v. *United States*, 6 Ct. Cust. Appls. 451, T.D. 35985 (1915), clearly stated its opinion on what type of merchandise was intended to be included under the tariff provision for cords and tassels:

> Illustrative exhibits have been offered in the case of what constitutes cords and tassels. They are articles approximately a yard in length with a tassel on each end, the major portion thereof plainly being a silk cord. They are articles of utility as well as adornment and are used on or attached to wearing apparel for various purposes. While these may respond to some other tariff nomenclature such as belts and beltings, they are, nevertheless, plainly within the terms cords and tassels. (at pg. 457)

It is noteworthy that although there have been numerous statutory tariff changes since *Willenborg*, there has been no manifestation by Congress of its displeasure or disagreement with the court's opinion of what constitutes cords and tassels.

Two general rules of statutory construction are pertinent. The first is that an eo nomine designation without terms of limitation includes all forms of the article. *Sears, Roebuck & Co.* v. *United States*, 46 CCPA 79, C.A.D. 701 (1959); *Hoyt, Shepton & Sciaroni* v. *United States*, 52 CCPA 101, C.A.D. 865 (1965). Clearly, the instant merchandise is made up of a cord and a tassel. The addition of the adjustment

sleeve does not change either the nature or function of the article. The sleeve merely serves to enhance and simplify the article's use as a tieback. The merchandise with the sleeve has the same function and use as the same merchandise without the sleeve. Accordingly, the addition of the adjustment sleeve does not make the merchandise "more than" a cord and a tassel. *United States* v. *Oxford International Corp.*, 62 CCPA 102, C.A.D. 1154 (1975); *Texas Instruments, Inc.* v. *United States*, — Cust. Ct. —, C.D. 4810 (1979).

Second, when a tariff term has been judicially interpreted and is thereafter reenacted in substantially the same language, the rule is that the term, when used in a later statute, will be given the same intrepretation unless a legislative intent to the contrary clearly appears. *W. E. Sellers* v. *The Cronite Co., Inc.* 45 CCPA 27, C.A.D. 668 (1957); *August Benthamp* v. *United States*, 40 CCPA 70, C.A.D. 500 (1952).

Holding.—Based on the above, the Customs Service concludes that the tariff term "cords and tassels" includes finished articles of commerce and, therefore, the subject merchandise is properly classifiable in item 385.70, TSUS. If an established and uniform practice exists to the contrary, such practice is clearly in conflict with *Willenborg*, supra, and should not be followed.

Effect on other rulings.—In view of the holding in this ruling, headquarters rulings 059300, dated September 21, 1978, and 055485, dated March 5, 1979, are, pursuant to section 177.9(d)(1), Customs Regulations, hereby modified to reflect that merchandise which was the subject of each of those rulings is properly classifiable in item 385.70, TSUS.

(C.S.D. 81-14)

Generalized System of Preferences: Effect of Improperly Completed Form A

Date: July 14, 1980
File: ENT-1-01:RRUEE
712934 MK

Re Application for further review of protest, No. 1001-9-009974, dated October 10, 1974

REGIONAL COMMISSIONER OF CUSTOMS,
New York, N.Y.

DEAR SIR: This decision concerns your classification, liquidation, and assessment of duty on plastic trees, decorations and balls. The importer alleged that they should have been classified and liquidated

as free, under the Generalized System of Preferences (GSP). (On Jan. 18, 1980, the importer's attorneys withdrew that part of the protest covering the plastic decorations and balls).

The entry was liquidated on July 13, 1979. The Certificate of Origin, form A, originally filed with the entry, was rejected because the Christmas decoration set listed on the form showed "Y 65 percent" and did not contain a breakout showing all the elements of the set. (The Y category indicated that the imported articles contained parts not produced, or substantially transformed, in the beneficiary developing country).

On December 19, 1978, an amended form A was issued, showing a breakdown for the elements in the set, but still showing the legend "Y 65 percent" for all 5 elements of the set. Customs questioned this, because it was highly unlikely that each element would contain 65 percent of domestic materials and labor.

Thereafter, in correspondence between the importer's attorneys and the parties concerned, it was found that all parts of the sets were wholly produced in Taiwan, and the forms A should therefore have listed a P instead of a Y.

On September 20, 1979, the shipper advised the importer that the government of the beneficiary developing country would not issue corrected forms A beyond 6 months from the original shipping dates. They also stated that the designation Y was caused by an erroneous interpretation of the country of origin criterion, and that the legend P should have been used to indicate that the articles were entirely produced in the beneficiary developing country.

Although the errors in the forms A were evidently caused by a misunderstanding as to how they should have been completed, we find no legal basis for accepting the shipper's statements that no new certificates of origin could be issued, and that the articles were wholly produced in the beneficiary developing country, in lieu of corrected certificates issued by the certifying authority of the country concerned.

As you know, a correctly completed Certificate of Origin issued by the appropriate agency of the foreign government of the beneficiary developing country is a condition precedent to granting duty-free treatment under GSP (with limited, inapplicable exceptions).

Under the circumstances, you are directed to deny the protest in full. Your file is returned herewith.

(C.S.D. 81-15)

Constructed Value: Architectural Drawings of Building Furnished to Foreign Fabricators of Building Stones

Date: July 14, 1980
File: CLA-2:RRUCV
061577 RS/RP

To: District Director of Customs, New Orleans, La.
From: Director, Classification and Value Division.
Subject: Internal Advice No. 175/79; Dutiability of Architectural Drawings.

For the purpose of appraisement under section 402 or 402a of the Tariff Act of 1930, as amended.

Issue.—1. Are the architectural drawings described below dutiable?

2. If so, how should Customs determine their value?

Facts.—The importer, a construction contractor furnished an Italian stone fabricator with detailed architectural drawings for a stone building. The contractor provided the following description of the transaction.

> After the importer is selected as the stone subcontractor for setting stone on a mausoleum, commercial building, or other project, the general contractor provides several sets of the architect's basic drawing of the structure. Thereafter, these drawings are reproduced, modified, and necessarily extended in the New Orleans office of the importer, in order to be more particular with respect to size and placement of stone pursuant to the architect's direction and in coordination with other trades. The importer's drawing is then sent to the supplier as part of the importer's order for fabricated material. Thereafter, the fabricator abroad makes shop drawings or setting drawings. This drawing may contain the same elevations but (as demonstrated during our meeting with Customs) is often extended to produce and match stone which will bring about the appropriate blend or continuity of material in areas, as well as additional details. Such new work, may or may not include a number of individual drawings specified by the importer.

Law and analysis.—Constructed value under section 402 and cost of production under 402a of the Tariff Act of 1930, as amended (19 U.S.C. 1401a and 1402) are based in part upon the cost of materials, fabrication, and "other processing of any kind employed in producing such or similar merchandise * * *" Costs of design, patterns or blueprints may form a part of constructed value or cost of production, whether or not such costs are incurred by the manufacturer. The problem is to distinguish designs, patterns, and blueprints that are to be considered a processing cost from those that are not.

In *Ravenna Mosaics, Inc.* v. *United States*, T.D. 41503, G.A. 9120 (1926), the Board of General Appraisers held that the cost connected with plans or sketches for mosaic pictures supplied by the importer to the German manufacturer formed part of dutiable value, even though the manufacturer used its own more detailed shop designs in order to produce the merchandise. The court upheld the original appraisement because "the plans were used in connection with the production of the merchandise." Similarly, in *Troy Textiles Inc.* v. *United States*, R.D. 11697, 64 Cust. Ct. 654 (1970), the Customs Court ruled that cost connected with the fabric designs supplied by the importer to the foreign manufacturer were attributable to the cost of producing the subject merchandise and formed part of dutiable value. The manufacturer copied each design and engraved it on steel rollers. Upholding the appraisement, the court found that the designs were "used as a guide in preparing the engraving to be done on the rollers" and that "it is necessary that the design be with the manufacturer at the time the steel rollers are engraved."

In contrast to precedents such as *Ravenna* and *Troy Textiles*, which follow what might be called a necessity or but for test, are two cases which established what is known as the what to do or specifications versus how to do it or patterns test. *Styles for Boys, Inc.* v. *United States*, R.D. 11617, 62 Cust. Ct. 772 (1969) aff'd A.R.D. 272, 64 Cust. Ct. 857 and *Exbrook, Inc.* v. *United States*, R.D. 11772, 69 Cust. Ct. 224 (1972) concerned the appraisement of imported garments under section 402(d). The importers supplied the manufacturers with designs and specifications. The court held in the former case that such styling and design costs were "nothing more than having the knowledge of what will sell in the markets of the United States," partly because "the sweaters involved were of common variety which were ordered prior to the formation of (the design firm related to the importer)." In *Exbrook*, the court held that the cost of specifications supplied by the importer were "instructions which every buyer must give to a manufacturer" and thus "relate primarily to the purchaser's role in the transaction."

It is clear that neither test is completely satisfactory because neither provides a certain result. Each case must be evaluated independently. Whether the costs associated with specifications, blueprints, patterns, designs, or whatever they may be called, are dutiable depends on a number of factors, including: whether the merchandise is made to order or ordered from stock, whether it is unique, whether the importer communicates more than numerical dimensions and standard material quality information about the merchandise, the amount of

original work product and detail in the communication to the foreign manufacturer, the degree to which the information supplied by the importer establishes the identity of the merchandise or determines the method of its production. The fact that the manufacturer must develop its own shop drawings on the basis of information supplied by the importer does not automatically mean the importer's contribution is nondutiable.

Given the facts you describe, the architectural drawings prepared by the importer and used by the stone fabricator are necessary to the production of the imported cut stones. The drawings are detailed and contain a significant amount of work product that is not commonly known or in the public domain. Although the fabricator developed its own shop drawings, the drawings supplied by the importer were more like the designs and patterns in *Ravenna* and *Troy Textiles* than the specifications in *Styles for Boys* and *Exbrook*. They are such highly refined specifications that they are more appropriately called designs or patterns.

Under section 500 of the Tariff Act of 1930, as amended (19 U.S.C. 1500), the appropriate Customs officer is instructed to appraise the imported merchandise "by ascertaining or estimating the value thereof by all reasonable ways and means in his power * * *" This principle applies as well to the costs of manufacturing units supplied free of charge to the manufacturer.

Those costs directly associated with preliminary drawings, sketches, outlines, etc., should be excluded from appraised value. Those dutiable costs identified with the architectural drawings should be included in appraised value. Where and how the line is drawn depends on the information available in each case.

If the architect's fee is not allocated to the preparation of specific drawings, as in most cases it is not, Customs officials should consult with the party or parties involved to develop the necessary information. Only if this approach is unfeasible or unproductive in a specific case, should Customs officials resort to other costing methods.

Holdings.—1. The appraised value of the imported merchandise should include the cost or value of the final architectural drawings used by the stone fabricator.

2. The appraising officer should use all reasonable ways and means to determine the cost or value of the assist. If actual data is unavailable, he or she may use the best alternative available.

3. To the extent that this determination is inconsistent with any other headquarters ruling on this subject, the earlier rulings are modified prospectively, in accordance with section 177.9(d) of the Customs Regulations.

(C.S.D. 81–16)

Value: Whether "Colorways" Are Dutiable Assists

Date: July 25, 1980
File: CLA–2:RRUCV
065209 JV

To: District Director of Customs, Los Angeles, Calif.
From: Director, Classification and Value Division.
Subject: Internal Advice Request No. 49/80.

This request concerns the dutiable status of certain assist activity undertaken by the importer in the United States and transmitted to the foreign manufacturer.

Issue.—Whether "colorway" activity, i.e., artist's renditions of various tone and color combinations done in the United States on preexisting fabric designs, constitutes a dutiable assist whose cost or value is to be included in the appraised value of subsequently imported textile fabric.

Facts.—The activity in question consists of the preparation in the United States by the importer of what are known in the textile trade as colorways. The merchandise to which this activity relates is textiles in the piece, printed. Colorways are described as variations in color on a preexisting design. The term "design" is used here in its ordinary meaning as being to conceive and execute shapes, figures, and lines in an arrangement one to the other so as to result in a visual impression readily distinguishable from any other arrangement of shapes, figures, or lines. This usage is limited to the medium of printing of textiles.

The activity here begins with the receipt by the importer of preexisting designs originally created and supplied by the foreign textile mill. The designs will generally be in the form of small paintings of a textile design, commonly called a croquis, and the remainder of the colorways originate from swatches of a printed textile which also originate with the mill.

Upon receipt of the designs the importer, based on its study and knowledge of textile trends and market predictions, may adopt the color design as furnished by the mill or, as here, determine to render that design in different color tone applications. It is this process of rendering the supplier-submitted designs in varying color tone applications, known as colorways, that is the subject of this ruling request.

Trade information submitted to this office indicates that colorways are produced in various ways, ranging in extremes from the very simple with little effort to the very intricate, using the labor and

skills of many individuals. Basically, colorways consist of designs or patterns of shapes with color combinations in the design. The design is colored by an artist mixing various color paints to arrive at a desired color and then applied to the design. Some designs are basic where most of the art work is in the mixing and application. Once the desired colorway is completed with design and color, it is sent to the art or printing department for matching and printing onto the fabric.

Submitted are four exhibits intended to represent the colorway applications of the foreign-supplied designs. Exhibit 1 includes a swatch of a textile in a design as received from abroad, with tracing paper added in the United States as an overlay. It is the textile swatch underneath the tracing paper overlay that is the design as received from the foreign supplier. The tracing paper on exhibit 1 represents a tracing of the design itself, without the design's colors, onto the overlay tracing paper. This tracing paper, as on exhibit 1, would then be utilized in producing what is itself then called a colorway, and which is in part represented by the remaining exhibits. The overlay on exhibit 1 is not itself, however, yet a colorway.

Utilizing the overlay from exhibit 1, a colorway may be produced by transferring the overlay design to either another overlay medium or directly onto a given ground shade for subsequent color rendering. Exhibits 3 and 4 illustrate this process. Exhibit 3 would be produced by utilizing the overlay from exhibit 1, tracing the design onto the background paper, and then by hand rendering the design shapes into different color schemes as may be dictated, for example, by the background ground shade itself. In exhibit 4, the overlay design would be traced onto a clear acetate, which is itself then laid over a ground shade, in the instance of exhibit 4, a dark blue shade. The color rendition of the design found on the textile on exhibit 1, would then be directly painted on the acetate overlay on exhibit 4, as that exhibit illustrates. You will note in exhibit 3 that the design from exhibit 1 has been traced directly onto the ground paper, and the color rendering of the design is only partially completed in exhibit 3, which partial completion is for purposes of illustration here. While not illustrated by a separate exhibit, a design such as found in exhibit 1 could be copied entirely by the eye onto a resulting colorway such as exhibited by exhibit 3. Such an eye transfer of the design would not utilize the overlay found on exhibit 1. It would, however, be intended to represent the design of the textile on exhibit 1, apart from variations in colors.

Exhibit 2 is intended to represent another method of producing a colorway. The design supplied by the foreign supplier may, in many instances, first be reproduced by means of a Xerox machine-made copy as shown on exhibit 2. Utilizing rice paper as an overlay, the design

335-094 O - 81 - 6

taken from the Xerox copy underneath will be rendered into different color tones as illustrated on exhibit 2 on the rice paper thereon. The rice paper would itself then be the colorway when completed, but the example on exhibit 2 has not been completed. Xerox copies are used as they are frequently easier to see and to hold in place, resulting in greater accuracy in duplication than used on the textile itself.

The colorways, then, are the varying color renditions illustrated on exhibits 2, 3, and 4. Stated another way, a colorway is simply a painted or colored overlay that differs from the prototype design in the color variations.

The selected colorway renditions of the foreign-supplied designs are then returned to the original designers abroad who will in turn utilize the colorway's color selections to print the design they had originally supplied.

Law and analysis.—We have considered the arguments expressed in the record as to the issue presented and conclude, based on the following considerations, that the activity in question falls within the ambit of those activities held by Customs and the courts to be nondutiable assists.

The fact that the designs from which the colorways are produced originate with the mills is strong indication that the mills possess the technical expertise to print the designs and resulting fabric without assistance from the importer. In this context, the comparatively recent statement of the Customs Service on design specifications is most pertinent. Reference is made to the following quotation in headquarters response to application for further review of protest No. 4101–6–000062, dated September 28, 1977 (541455).

> It is our position, after a detailed review of all precedents, that what should be controlling is the position of the foreign manufacturer vis-a-vis the drawing received. If the foreign manufacturer does not possess the technical expertise to manufacture the ordered item without the drawing/specifications, then such a drawing would properly be treated as being dutiable. However, if the manufacturer possessed the requisite technical expertise and treated the drawings as it would any narrative specifications, then the drawings would not be treated as being dutiable.

In that case, the evidence disclosed two facts which we viewed as being quite significant. First, the foreign manufacturer utilized the importer-supplied blueprints solely to obtain the desired dimensions of the imported piston rings and according to the established evidence was capable of producing such products without any assistance being furnished by the importer. On the basis of these facts, headquarters concluded that the blueprints were merely specifications and that based on *Styles for Boys, Inc., James G. Wiley Co.* v. *United States*, 62 Cust. Ct. 772, R.D. 11617 (1969 aff'd 64 Cust. Ct. 857 (1970)) and

Exbrook, Inc. v. *United States*, 69 Cust. Ct. 224 (1972), were not to be treated as dutiable.

It is our position, based on the principles enunciated in the above-cited cases and the established facts, that the assist supplied in the present case is conceptual in nature and constitutes a specification of the color desired which the mill options to the buyer. As a result, its cost is not a necessary element of value to be included in the appraised value of the subsequently imported fabric.

In the cases you cite to support your contention that colorway is a dutiable function, the facts are clearly distinguishable. In those cases, the designs or patterns in their entirety originated with the buyers and were required by the manufacturers to produce the imported goods. Apparently, the manufacturers did not have the expertise or capability to produce the goods without such assistance. Furthermore, that which was furnished went beyond such considerations as size, shape, or, as in this case, color.

Further reference is made to internal advice 156/78, published as C.S.D. 79-297, dated April 3, 1979. The drawings involved in that ruling were for the production of baseball gloves. A full reading of the text of that ruling shows most clearly that what was imparted through those drawings was not a color scheme or even a variation of a baseball glove design originally supplied by the foreign manufacturer. Rather, the importer, through the drawings, conveyed to the seller certain configurations from which the manufacturer-seller presumably prepared cutting dies. As stated therein, the drawings that were the subject of that ruling were "meant to be the basis for the creation of a type of glove not readily made by the manufacturer." Here, on the contrary, the textile designs are most obviously of a design, in fact, readily made by the manufacturer, as it is the manufacturer who provides the original design.

Of critical importance here is the fact that the colorways in no way alter the original design of the print apart from altering the color scheme, and in this respect, are far less than the sweater and shirt configurations held to be nondutiable in *Styles for Boys, Inc.* and *Exbrook, Inc.*, supra. Further, while it is true that the mills are requested to match the colors desired to the colorways, the colorways themselves are not accompanied by industrial color code references or specifications as to the composition of color dyes or related technical printing instructions. The colorways, which are complete unto themselves, merely illustrate the coloration desired; they do not provide detailed instructions to the mills on how to print the fabrics.

As pointed out by counsel, every buyer's request or specification, in a broad sense, assists the seller in satisfying that buyer and consequently making a sale. All such requests or instructions inherently

require some response by the seller in adjusting his fabrication process to meet such order requirements. However, where, as here, the response is only to vary the colors of an existing print design, there is no cost of manufacture which the mill has been relieved from incurring or would have otherwise incurred. There is, then, no assist supplied to which the current appraisement laws apply (sections 402 and 402a, Tariff Act of 1930, as amended).

Holding.—Colorway activity done in the United States on preexisting fabric designs furnished by the foreign textile mill is not a dutiable assist whose cost or value is to be included in the appraised value of subsequently imported textile fabric

---

(C.S.D. 81–17)

Cost of Production: Allocation of Fixed Overhead Costs; Dutiability of Warranty Costs

Date: June 2, 1980
File: CLA-2:RRUCV
542126 BS

Re Application for further review of protest Nos. 1401–8–000245 through 1401–8–000250.

DISTRICT DIRECTOR OF CUSTOMS,
Norfolk, Va.

DEAR SIR: The above-captioned matter was the subject of a headquarters ruling dated March 26, 1980. While our decision to deny the protests remains unchanged, we have made certain revisions to page 6 of the original ruling. Accordingly, please change your records and substitute the ruling, as set forth below, for the ruling of March 26.

The primary issue involved in the above-captioned protests is whether the accounting method utilized by the foreign supplier in allocating certain fixed expenses between its European production and its U.S. production may be used in determining the usual general expenses under a statutory cost of production appraisement.

Under the exporter's method of accounting, certain general expense items are excluded from the cost of production of the imported merchandise, for the reason that in the judgment of management, they are not incurred in connection with that part of the production exported to the United States.

Protestant explains that it uses the full absorption costing method of accounting, in that all costs required under such methods to be allocated to units of production are allocated on a disproportionate

best copy available

basis to the vast majority of production intended for the European market, rather than the small portion of production intended for the U.S. market (stated to be less than 2 percent of total production) because such costs are fixed in nature and are in fact absorbed in the exporter's sales to the European market. Essentially, the argument is that such costs do not increase with the increase in production to the United States. The specific items of cost that are not allocated to U.S. production pursuant to this method of accounting are general plant overhead and maintenance, research and design, and depreciation of machinery and buildings.

Under section 402a(f), Tariff Act of 1930, as amended, the cost of production of imported merchandise includes "* * * the usual general expenses (not less than 10 per centum of such cost) in the case of such or similar merchandise." However, the statute is silent as to the appropriate accounting methods to be utilized to determine the allocation of various general expenses partially attributable to U.S. production when such production is but a part of the total production. Under these circumstances, it is Customs position that a method that allocates certain fixed costs, which would otherwise be at least partially applicable to U.S. production, solely to production for the foreign market cannot be acceptable for purposes of determining statutory cost of production. In this instance, it is our opinion that an equitable method of allocation is one that permits fixed costs to be apportioned equally over the total production.

Concededly, the decision to produce additional automobiles for export to the United States in the instant case may not have increased certain fixed costs. However, this does not warrant an allocation of such costs which may either be grossly disproportionate in favor of European production or which entirely excludes U.S. production from an appropriate share.

This view is not intended to discredit the accounting method itself, which may be a useful tool to the company in terms of decisionmaking regarding changing levels of production, or for other purposes. Rather, we are of the opinion that in the context of a cost of production appraisement, such method is inappropriate. We believe our position is supported by the decision rendered by the Court of Customs and Patent Appeals in *John V. Carr & Son, Inc.*, v. *United States*, 52 CCPA 62 (1965).

In *Carr*, the manufacturer produced identical articles for home consumption and for export to the United States. The substantially higher home market prices were primarily due to the higher general expenses that were attributed to the merchandise produced for domestic consumption. Certain fixed items of overhead (taxes, insurance, depreciation) were entirely excluded from the cost attributable to the

exported merchandise. The court held in that case that the assignment of fixed costs to the extent and in the manner disclosed arbitrarily excluded a fair proportion of overhead expenses relating to cost of production which are reasonably and normally chargeable to export operations.

While in *Carr* the volume produced for sale in the home market was less than that produced for exportation to the United States, in our opinion that fact reinforced the court's determination but was not the central factor which influenced its decision.

Rather, the dominant factor appeared to be the total exclusion of certain fixed expenses from the constructed value computation. The court concurred with the lower court's opinion that—

> "* * * such blanket license to a foreign shipper to estimate costs in accordance with his own peculiar accounting standards is susceptible of depressing the values of imported merchandise and of thwarting the statutory objective of reaching a value as far as possible consistent with that which fairly reflects market value * * *"

The fact that constructed value was the basis of appraisement in *Carr* would not prevent application of its principles to the instant matter, since it is settled law that "* * * constructed value and cost of production formulae are designed, * * * to embrace all expenses of manufacture or fabrication of an article, whether borne by manufacturer or purchaser." (See *Goodrich-Gulf Chemicals Inc.* v. *United States*, 66 Cust. Ct. 509 (1971), R.D. 11733.)

Although it has been held that "* * * slight variations in the cost, which do not appreciably affect the cost called for by the statute may be disregarded in determining the cost of production" (See *Glanson Co.* v. *United States*, R.D. 9208 (1958), aff'd. A.R.D. 110 (1958)), it is apparent that the variation in the instant case is substantial and cannot be disregarded. According to protestant, the unit cost for general expenses per automobile (in French francs) is 1,641.20 by its calculations versus 3,845.51 by Customs calculations. We are of the opinion that the appraising officer's method of allocation (as described, supra) is correct and that the exporter's method of accounting resulted in a gross distortion of the costs of manufacture applicable to goods produced for the U.S. market, and accordingly, cannot be utilized for statutory cost of production purposes.

In the alternative, protestant contends that Customs is estopped from employing a different method of allocating general expenses with respect to the subject entries because it relied on Customs acceptance and approval of the accounting method the company utilized in determining this allocation. Protestant alleges that this method had been utilized since 1958, that several Customs verifications had been con-

ducted since that time but the company was never instructed to change its accounting method in this regard. As a result, protestant continued to rely on Customs approval of the method of accounting used and projected its duty liability on this basis. Protestants vehicles were priced accordingly.

Specifically, protestant alleges that in March 1973, Customs initiated a foreign investigation regarding the costs of production submitted by protestant for its 1972 model automobiles. The investigation was concluded in October 1974, 3 months after the last entry of 1974 model cars had been made, with only minor adjustments to the calculations. At no point during this investigation was the overall method of accounting put into question. In protestant's opinion, the outcome of the investigation, which did not result in any change in the accounting method utilized, must be regarded as approval by Customs of this method which had been used by protestant for approximately 15 years.

A second foreign investigation, this one regarding the model year 1974, commenced in September 1975. While the final report of this investigation proposed a fundamental change in the accounting method utilized, protestant did not learn of the contents of the report until September 1977. Moreover, when liquidation of the 1974 model year entries began in 1978, the method used by Customs was different than the approach taken in the report.

Protestant argues that liquidation of the subject entries at the advance contemplated by Customs would be a retroactive change contrary to established principles of law. Various court decisions are cited as support for its position.

Primarily, these cases deal with situations in which an administrative agency's construction of a statute changes after the aggrieved party had taken certain irrevocable actions in reliance on the prior construction. In those situations, the courts have held that the rights or benefits acquired prior to the change cannot be affected retroactively. (See, for example *Henry Clay & Bock & Co., Ltd.* v. *United States*, 41 CCPA 45 (1953)).

We do not disagree with the protestant's interpretation of the cited cases, nor with the rationale underlying these various decisions. However, we believe that the application of these cases to the particular facts here involved is misplaced.

The cited cases deal with administrative rules that were changed to the detriment of the aggrieved party who had a definite right to rely upon, and did rely upon, the previous stated policy or rule. On the other hand, in the instant case, we have no prior rule or policy, express or otherwise, with regard to acceptance of the type of accounting method utilized by protestant. Mere acceptance of the cost submissions

by Customs does not by itself constitute approval of the methods used by protestant to determine these costs. Nor can we logically infer approval based on an investigation that does not focus on the accounting methods utilized, but rather on the accuracy of the cost figures submitted. We note in this regard that our records fail to disclose any foreign verifications until 1970, and we have no record of the import specialist's final decision with respect thereto. As previously indicated, the verification involving the 1972 model year was concerned solely with the accuracy of the submitted costs, and not the underlying rationale.

Accordingly, we find no prior Customs approval of the accounting method utilized by protestant, and thus no retroactive change in Customs policy in this regard. Moreover, the purpose of a foreign verification is to gather data, and not to appraise merchandise. Therefore, while the investigating agent may have made certain proposals in his final report as to the cost of production submissions on the 1974 model cars, these proposals were not binding on the import specialist, who is the responsible Customs officer on matters of appraisement.

Protestant makes the additional argument that the delay of nearly 5 years in liquidating the subject entries was unreasonable and precludes the imposition of higher duties. It is argued that Customs was entirely at fault for the delay, and that such inaction is in contravention of legislative intent and Customs regulations. (Section 159.51 provides that liquidation of entries shall be suspended only when provided by law or regulation, or when directed by the Commissioner of Customs.) Protestant alleges financial harm as a result of the delay (assuming administrative relief is denied), since it priced its vehicles for subsequent years in reliance on past practice.

The record discloses that the entries in question were the subject of a foreign investigation commencing in September 1975 and which culminated in a final report dated May 19, 1977. The investigation covered not only the accuracy of the submitted costs, but also the methods and systems used by protestant in arriving at these costs.

Based on the scope of the verification, and the heavy backlog of cases faced by foreign Customs representatives during the years in question, protestant has not established that the delay in liquidation was in effect due to Customs negligence.

Protestant also contends that certain warranty costs, included by the appraising officer as part of statutory cost of production, are not properly includable because such costs consist of labor to be performed by protestant in the United States and spare parts which will be separately dutiable upon entry into the United States.

Our position with regard to the dutiability of warranty costs was

set forth in detail in ORR Ruling 76–0072 (File No. 72–024488 RG), dated July 15, 1976, as follows:

> In resolving this issue, it is first necessary to consider whether warranties, as a general rule, are to be considered a part of construction value under section 402(d), Tariff Act of 1930, as amended. We are of the opinion that warranty charges should ordinarily be considered dutiable as a general expense usually reflected in the sale of merchandise for exportation to the United States. We would note initially that most jurisdictions recognize implied warranties in the absence of contrary contractual provisions and sometimes in spite of those provisions. Additionally, a warranty to replace defective parts is something which attaches to the merchandise itself. American jurisprudence indicates that "the term warranty is generally understood as an absolute undertaking in praesenti against the defect." 67 Am. Jur. 2d 587. We conclude, therefore, that a warranty, if usual, may properly be considered a general expense. This conclusion is in accord with *United States* v. *Alfred Dunhill of London, Inc.*, C.A.D. 305 (1945), where the court stated:
>
> > "In our opinion the usual general expenses of a business are the expenses of doing business * * * and profit is calculated on the difference between such expenses and receipts."

In response to a similar argument that warranty cost consists of labor to be performed in the United States, we also pointed out in the ruling that a warranty was not an after-sales service contract, but rather "a guarantee that the manufacturer will produce a product free from defects, and that obligation can be completely satisfied by producing a product free from defects."

While we have held that certain costs of production of an unforeseeable nature may be excluded from dutiable value, warranty costs obviously cannot be placed within this category. Further, it is well established that under the cost of production statute, usual general expenses are those actual general expenses of the manufacturer which are usual for him.

Under these circumstances, you are directed to deny the protests in full.

U.S. Value: Actual Freight Charges as Permissible Allowances

Date: June 30, 1980
File: CLA-2:RRUCV
061972 RP

To: District Director of Customs, Wilmington, N.C.
From: Director, Classification and Value Division.
Subject: Request for Internal Advice No. 19/80: Appraisement of Stainless Steel Pipe.

This is in response to the referenced request for internal advice con-

335-084 O - 81 - 7

cerning importations of stainless steel pipe from Japan. The exporter and importer are related parties, and the exporter sells the merchandise in question on a c.i.f. basis. The record indicates that sales are not made on an f.o.b. basis. The subject merchandise is imported into the United States using conference and nonconference freight carriers. The conference freight rate for the steel pipe is $175 per metric ton, and the non-conference freight rate is $48 per metric ton.

The issues raised in the instant case concern the dutiable status of the freight charges and the proper basis of appraisement for the imported pipe.

It is the contention of the importer that the subject merchandise should be appraised on the basis of export value, as represented by the selling price less nondutiable charges (one of which is the higher conference rate freight charge). The importer maintains that the lower nonconference rate is a fugitive and nonregular rate, and therefore, not usual or in the ordinary course of trade.

It is the opinion of your office that export value under section 402(b), Tariff Act of 1930, as amended, does not exist for the subject merchandise. You would appraise the imported pipe on the basis of U.S. value (section 402(c)). In support of your position, you rely on headquarters ruling R:CV:V DA, 054793, December 22, 1978, wherein it was held that export value cannot be determined by adding an amount to f.o.b. price list prices equal to the difference between the ocean freight included by the seller and the lowest freight charge actually paid to any U.S. port. In that case, the exporter issued invoices showing f.o.b. unit values with an additional lump sum charge for estimated ocean freight added to the f.o.b prices Investigation revealed that the estimated charges were in some cases greater than the actual freight charges, and that the exporter did not return the excess amounts to the importer. Since the excess estimated freight charges were not returned to the importer, headquarters determined that the f o.b. prices had, in effect, been increased by an amount equal to the difference between the actual and estimated charges. Therefore, export value was precluded since the f.o.b. price lists did not fully reflect the market value of the merchandise. It should be noted that headquarters ruling cited *United States* v. *Josef Mfg. Ltd.*, 59 CCPA 146, C.A.D. 1057 (1972) in which the court held that the appraiser could not deduct a single freight charge from a uniform price and make a uniform export price, where one does not exist. The court stated that there was an f.o.b. offered price which should be used for appraisement purposes.

In the instant case, the record reflects that sales are not made on an f.o.b. basis. Moreover, the evidence indicates that the exporter does not return the excess estimated freight charges. Therefore, based on the

evidence presented, and in accordance with headquarters ruling and the court case cited above, we are of the opinion that export value does not exist for the subject merchandise.

However, the file does indicate that U.S. value (402(c)) exists for the imported pipe. In telephone conversations with the concerned import specialist, it was learned that each of the seven entries in question represents a single shipment of the subject merchandise, and that every entry lists a different date of exportation. The actual freight charges for each shipment are ascertainable. Lastly, the import specialist has indicated that U.S. value can be determined for the entries under consideration.

Therefore, we agree with your office that the subject merchandise is to be appraised on the basis of U.S. value. We note that the actual freight charges represent the permissible allowances for freight under section 402(c)(2).

(C.S.D. 81-19)

Classification: Reversible Pump/Turbine; Determination of Principal Purpose

Date: July 24, 1980
File: CLA-2:RRUCGC
061674 BB

AREA DIRECTOR OF CUSTOMS,
New York, N.Y.

DEAR SIR: This is in response to request for internal advice No. 215/79, concerning the classification of Francis type, reversible pump/turbines used in pumped storage electric power generation (your reference CLA-2-06-S:C:D-II-CST-21-218).

Facts.—The subject merchandise is described as pump/turbines of the vertical shaft, single-impeller-runner, Francis type with spiral case, fixed-stay vanes and wicket gates. These machines are imported for use in connection with pumped storage power generation facilities.

A pumped storage power generation system is designed to provide additional peaking capacity for a power network by using an upper pool of water as a type of storage battery. Such a system normally employs both thermal generators and hydrogenerators. The key to the system is a reversible generator/motor which drives and is driven by the reversible pump/turbine that is at issue here. During periods of low electrical load, such as the early morning hours, excess power from thermal generators is used to drive these machines operating in their motor/pump mode. This moves water from a lower pool to an upper pool. During peak load hours, the water runs down from the

upper pool driving these machines operating in their turbine/generator mode to produce electrical power. This system results in a net loss of electricity since more power is consumed pumping the water to the upper pool than is generated when it flows back down. Yet, the system is economical because power is produced during a high cost period.

These generator/motor and pump/turbine machines are quite large. They normally are specifically designed to meet the requirements of the particular pumped storage project into which they are being installed. The reversible pump/turbine differs from a standard Francis turbine in that the impeller is larger and there are only ⅓ the normal number of vanes on the runner. Some of the efficiency of both a pump and a turbine must be sacrificed in designing a reversible machine.

Issue.—The question to be decided is what constitutes the principal purpose of the subject pump/turbines?

Law and analysis.—The relevant provisions of the tariff schedules are as follows:

SCHEDULE 6.—METALS AND METAL PRODUCTS

* * * * * * *

PART 4.—MACHINERY AND MECHANICAL EQUIPMENT

Part 4 headnotes:

* * * * * * *

2. Unless the context requires otherwise, and subject to headnote 1 to subpart A of this part, a multipurpose machine is classifiable according to its principal purpose, but if such a machine is not described in a superior tariff heading as to its principal purpose, or if it has no one principal purpose, it is classifiable in subpart H of this part as a machine not specially provided for.

* * * * * * *

Subpart A.—Boilers, Non-Electric Motors and Engines, and Other General-Purpose Machinery

Subpart A headnote:

1. A machine or appliance which is described in this subpart and also is described elsewhere in this part is classifiable in this subpart.

* * * * * * *

Water wheels, water turbines, and other water engines, and parts including governors therefor:

* * * * * * *

660.76	Other	7.5% ad valorem.
*	* * * * * * *	
	Pumps for liquids whether or not fitted with measuring devices; liquid elevators of bucket, chain, screw, band, and similar types: all the foregoing whether operated by hand or by any kind of power unit, and parts thereof:	
*	* * * * * * *	
660.97	Other	4.8% ad valorem.
*	* * * * * * *	
	Subpart H.—Other Machines	
*	* * * * * * *	
678.50	Machines not specially provided for and parts thereof	4.8% ad valorem

A multipurpose machine is a machine that performs two or more functions simultaneously or consecutively. Customs has previously recognized that reversible pump/turbines are multipurpose machines. See headquarters ruling letter (HRL) 046629, dated June 17, 1977. Therefore, classification of the pump/turbine is governed by headnote 2 of part 4, schedule 6, Tariff Schedules of the United States (TSUS), which says that, subject to headnote 1 of subpart A, part 4, a multipurpose machine is classifiable according to its principal purpose unless it has no one principal purpose in which case it is classifiable as a machine not specially provided for.

Headnote 1 of subpart A, part 4, schedule 6, TSUS, says that a machine described in subpart A and also described elsewhere in part 4 of schedule 6 is classifiable in subpart A. While certain multipurpose machines are described in subpart A, a machine that is both a pump and a turbine is not. Therefore, headnote 1 of subpart A does not affect the classification of this machine.

The question under headnote 2 of part 4 then becomes whether the pump/turbine has a principal purpose and, if so, what that purpose is. In some past rulings on pump/turbines, Customs has looked to factors like the comparative efficiency of the machine as a pump versus its efficiency as a turbine or the estimated amount of time the machine would be operating in each mode, in order to determine its principal purpose. In others, the principal purpose was assumed to be generation of electricity.

For example, in T.D. 56457 (45) Customs held that a machine with both a turbine runner and a pump impeller mounted on a common shaft within a common housing was classifiable as a turbine in item 660.76, TSUS, because its principal purpose was to operate

a generator. In T.D. 68–170 (16), Customs held that a reversible pump/turbine which was 11 times more efficient as a pump than as a turbine and which would most likely be used 70 percent of the time as a pump was classifiable as a pump in item 660.97, TSUS. In HRL 046629, dated June 17, 1977, Customs held that in the absence of detailed information as to the design and relative efficiencies of a reversible pump/turbine, the machine was classifiable as a turbine. In HRL 056900, dated August 10, 1978, Customs held that a reversible pump/turbine was classifiable as a water turbine where the predominant feature of the device was stated to be a turbine.

This line of rulings on pump/turbines must be compared with the line of Customs rulings on the classification of the reversible generator/motors which are designed for use with the pump/turbines in pumped storage projects. In HRL 007702, dated October 23, 1970, Customs held these generator/motors were multipurpose machines with no one principal purpose. This ruling was based upon the fact that there was little distinction between an electric motor and an electric generator as a machine which can perform both these roles without significant modification. The ruling cites the case of *Edo Commercial Corporation, F.W. Myers & Co., Inc.* v. *United States*, 55 Cust. Ct. 30, C.D. 4049 (1970), which held that a underwater transducer which functioned as both a loudspeaker and a microphone had coequal functions because both these functions were essential to the machine's design. Therefore, the transducer was held to be neither a microphone nor a loudspeaker but more than either. The ruling concludes that a machine which functions as both a generator and a motor has coequal functions where both functions are essential to the machine's design. Therefore, applying headnote 2 of part 4, the generator/motor had no one principal purpose and was classified as a machine not specially provided for.

In HRL 044060, dated March 1, 1976, Customs reaffirmed the classification of these generator/motors as machines NSPF. In this case the arguments were made that the machine was less efficient operating as a motor than a generator, that the unit operated in the generating mode 90 percent of the time and that the overall purpose of the pumped storage project was to generate electricity. Therefore, it was urged that the principal purpose of the generator/motor was that of a generator.

The ruling responds to these arguments by saying that focusing solely on time of operation in each mode confuses the concept of principal purpose with that of chief use. In determining the principal purpose of a multifunction machine under headnote 2, the importance of each of the functions to the operation of the whole machine is highly relevant. It was determined that the generator/motor was

not simply designed to produce electricity, but to produce less expensive electricity during peak load hours. The function of the motor to pump water to a higher level during nonpeak hours was essential to attaining this end, and therefore, essential to the design of the machine. Accordingly, the generator and motor functions were coequal and the machine had no one principal purpose. This position on generator/motors was again reaffirmed in HRL 045444, dated January 9, 1978.

The approach to determining what constitutes the principal purpose of a multipurpose machine under headnote 2 which was taken in our rulings on generator/motors appears inconsistent with the approach taken in some of the rulings on pump/turbines. However, this apparent inconsistency might be reconcilable. The generator/motor rulings did not say that time of operation in each mode or relative efficiencies were irrelevant to determining principal purpose, only that they were not the sole determining factors. Arguably, in the pump/turbine rulings the disparity in time of operation and relative efficiency was so great that one function or the other was plainly auxiliary.

Moreover, mechanical distinctions can be drawn between generator/motors and pump/turbines. Because of the nature of a generator and a motor, no major design changes are necessary to make a machine function efficiently as both. With a pump/turbine, however, turbine efficiency must be sacrificed in designing an effective pump and vice versa. Our earlier pump/turbine cases may have turned on this design problem. When looking at a particular pump/turbine one can determine whether the efficiency trade-off between pump and turbine has been skewed in favor of one or the other function. The way this design problem is resolved may be the single most important factor in determining the principal purpose of a given machine.

Turning then to the machines at issue in this case, from the technical information submitted it appears that the design sacrifices have been made equally between pump and turbine so that the machine operates almost as efficiently as either a pump or a turbine. While no reliable estimates are available for what percentage of time the machine will operate in either mode, it is apparent that both modes must be used since, unlike some earlier pumped storage projects, the projects for which these pump/turbines were designed use the same water tunnel to pump the water up and to run the water back down.

In the generator/motor rulings, we indicated that the purpose of a pumped storage facility was not simply to generate electricity since the operations involved actually result in a net loss of electrical power. The purpose of the facility is to generate low-cost electricity during peak hours. The pump/turbine is as important to the project as the

generator/motor. The pumping function is as essential to the design of the pump/turbine as the motor function is to the design of the generator/motors.

Accordingly, given the information submitted on these pump/turbines and in line with the rationale expressed in our recent rulings on generator/motors, we conclude that the pumping function and the turbine function of this merchandise are coequal. Therefore, these pump/turbines are multipurpose machines with no one principal purpose and, pursuant to headnote 2, part 4, are classifiable as machines not specially provided for.

Holding.—The subject merchandise is properly classified under the provision for machines not specially provided for, in item 678.50, TSUS, dutiable, as a product of Japan, at the column 1 rate of 4.8 percent ad valorem if entered on or after January 1, 1980, otherwise at the prevailing rate on the date of entry.

(C.S.D. 81-20)

Classification: Seat Post Bushings and Handlebar Post Collars; Parts of Bicycles or Tricycles

Date: July 30, 1980
File: CLA-2:RRUCGC
065166 JCH

To: Senior Import Specialist, Mobile, Ala.
From: Director, Classification and Value Division.
Subject: Request for Internal Advice No. 55/80 Concerning the Tariff Classification of a Seat Post Bushing and a Handlebar Post Collar Manufactured in Japan.

The subject internal advice request was forwarded to us on March 12, 1980. Our decision follows:

Issue.—Whether the subject merchandise is classifiable under the provision for parts of bicycles, in item 732.42, Tariff Schedules of the United States (TSUS), or under the provision for tricycles and other wheeled goods for children, and parts, in item 732.52, TSUS. The current column 1 rates of duty required under these provisions are 15 percent ad valorem and 8.3 percent ad valorem, respectively.

Facts.—The importer has indicated the products in question are parts made to their specifications for use on tricycles and children's bicycles which they manufacture. In a letter dated August 12, 1974, it was stated that the seat post bushing had been used on chain-driven tricycles, but in the 1974 line, it was used only on sidewalk bicycles. In a letter dated September 12, 1977, the importer indicated that

approximately 53 percent of the handlebar post collars were used on tricycles and 47 percent were used on bicycles.

Law and analysis.—In accordance with general headnotes 10(e)(i) and 10(ij), TSUS, the classification of a part is determined by the chief use of the class or kind of article to which the imported part belongs. The use to be considered is the use at the time of, or immediately prior to, importation.

When we previously considered the classification of the handlebar post collar, we indicated that the use of a homologous part on adults' bicycles should be considered in determining the chief use of the class or kind of article involved. On reconsideration, we now are of the opinion that the handlebar post collar, as well as the seat post bushing, should be regarded as classes or kinds of articles by themselves. Therefore, our letter of January 23, 1978, file No. 056006, should be considered as modified accordingly.

There are no set rules for determining class or kind. Depending on the facts in each case, the nature of the merchandise, and the wording of the competing tariff provisions, class or kind can be limited to specific imported merchandise or be considerably broader in scope. In the instant situation, the competing tariff provisions encompass closely related products with many homologous and sometimes interchangeable parts. However, the parts at issue are made to specification and lack interchangeability with the homologous parts on anologous products. In these circumstances, we believe it would be incorrect to classify any part which actually is chiefly used on tricycles as a part of a bicycle by increasing the scope of the class or kind involved and by increasing the scope of the bicycle parts provision at the expense of the legitimate coverage of the tricycle and other children's vehicle parts provision.

However, children's bicycles are classifiable under the same provisions applicable to adults' bicycles. Therefore, even though we have limited the class or kind involved, use of either part on a child's bicycle militates against classification under item 732.52.

Holding.—The evidence indicates that the seat post bushing is not chiefly used on tricycles. Therefore, it is properly classifiable under item 732.42 or predecessor provisions as they may be applicable.

With respect to the handlebar post collar, the importer should be given an additional 30 days to furnish evidence showing that the part is, in fact, made to specification and that the greater percentage of it use is on tricycles. The evidence should consist of more than self-serving statements and approximations, and should be specific, convincing and prove to your satisfaction a chief use on tricycles.

If such evidence is not furnished and duty is liquidated under item 732.42, the importers still would have the opportunity to submit evi-

335-084 O - 81 - 8

dence supporting their claims in connection with a timely filed protest. A copy of this decision should be made available to the importer.

(C.S.D. 81-21)

Value: Dutiability of Charges for Quota Rights

Date: September 12, 1980
File: CLA-2:RRUCV
065194 RP

To: Area Director, New York Seaport, New York, N.Y.
From: Director, Classification and Value Division.
Subject: Request for Internal Advice No. 97/80.

This is in response to the above referenced request for internal advice involving the inclusion of quota charges in the appraised value of certain imported wearing apparel.

The record indicates that the U.S. importer purchases the subject merchandise through a bona fide buying agent from a manufacturer in Hong Kong. The buying agent obtains, and is the holder of the export quota rights for the wearing apparel. The issue raised in the request for internal advice concerns whether or not the charges for quota rights form part of the dutiable value of the imported merchandise.

It is the position of your office that the export of the wearing apparel was subject to quota charges and that these charges should be included in the appraised value of the merchandise. You indicate that counsel for the importer has failed to substantiate the separate nature of the quota charge in the form of transfer papers issued by the Hong Kong Government, plus evidence of the actual amount paid to the quota holder. In support of your contention, you rely on a headquarters ruling (file No. 74-540308, dated October 18, 1974) which demonstrates the proofs needed to substantiate the claim that the quota charges do not form part of dutiable value. In addition, you cite a recent headquarters decision (file No. 055267, dated April 1, 1980) in which this office determined that the protestant had failed to substantiate the amount paid by the exporter-manufacturer for certain quota rights. In that case, the quota charges were held to form part of the appraised value of the imported merchandise.

Counsel for the importer contends that the quota charges in the instant case do not form part of the dutiable value of the subject wearing apparel. Counsel maintains that the proof required under ORR ruling 74-540308 (namely, (1) documentary evidence of the transfer of the quota, and (2) documentary proof of payment by check or otherwise for the purchase of the quota by the exporter) places an

unduly onerous burden on the importer, and is unnecessary in light of the facts in this case. Counsel distinguishes the factual situation presented in the instant case from those involved in headquarters April 1, 1980, ruling (file No. 055267). In the April 1, 1980, decision, the manufacturer-exporter purchased the quota, and the protestant failed to submit the proof necessary to establish that the quota charges did not constitute a part of the freely offered price of the merchandise. In the instant case, counsel maintains that the record establishes that the buying agent purchased the quota, and that the invoice value of the merchandise does not include any quota charges. Counsel states that the evidence demonstrates that the manufacturer freely sold or offered the merchandise to the importer without the inclusion of a quota charge; therefore, how or where the importer otherwise obtained the necessary quota is irrelevant in appraising the merchandise in question.

We agree with counsel for the importer that the facts presented in this case are distinguishable from those which were the subject of our April 1, 1980, decision. In the instant case, the evidence of record establishes that the wearing apparel was freely sold without the inclusion of quota charges. The invoice values do not include additional amounts for quota rights, and the affidavit of the manufacturer indicates that the merchandise was freely sold to the importer without inclusion of any quota charge.

It is our opinion that the proof required under ORR ruling 74–540308 is inapplicable in the instant case inasmuch as the buying agent purchased the quota rights rather than the manufacturer, and the record establishes that the manufacturer freely sold or offered his merchandise without the inclusion of an additional amount for quota charges.

In accordance with the above, we find in this particular case that the subject quota charges do not form part of the dutiable value of the imported merchandise.

(C.S.D. 81–22)

Classification: Radio Remote Controlled Miniature Vehicles

Date: February 15, 1980
File: CLA–2:RRUCGC
062210 c

This ruling concerns the tariff classification of radio remote controlled vehicles.

Facts.—The merchandise involved consists of ready-to-run radio controlled vehicles imported in units, each unit consisting of a motor

vehicle with an accompanying hand-held transmitter. Batteries are not included with the merchandise at the time of importation.

The specific articles in issue are described as follows:

Model	*Prototype article*
1. Giant F–1 Racer (No. 1003)	Mclaren M23 Formula 1
2. Demo Derby Racing Set (No. 1007)	1931 model A Ford
3. Giant 79 Corvette (No. 1013)	1978 Corvette Stingray
4. 1978 Corvette (No. 1009)	1978 Corvette Stingray
5. Ferrari (No. 1004)	Ferrari (1977)
6. Porsche 935 (No. 1010)	Porsche 935
7. Porsche 935 (No. 1015)	Porsche 935
8. Starsky & Hutch (No. 1012) Ford Torino	1975 Ford Torino
9. Porsche 935 (No. 1500) (3 function)	Porsche 935

The inquirer states that all the vehicles are made to scale and are modelled after specific motor vehicles, although there may be small variations on certain parts of the motor vehicles.

It is the position of the inquirer that the motor vehicles listed above, along with their hand-held transmitters, should be considered entireties classifiable under the provision for other models, in item 737.15, Tariff Schedules of the United States (TSUS).

In the alternative, the inquirer claims that the motor vehicles should be classified under item 737.15, TSUS, as other models, and the hand-held transmitters should be classified separately under the provision for radio remote control apparatus, in item 685.60, TSUS.

With respect to the classification of the Demolition Derby Race Set (No. 1007) the inquirer claims alternatively that it should be classified under the provision for game machines, including coin or disc operated game machines, and including games having mechanical controls for manipulating the action, in item 734.20, TSUS.

Issue.—Whether the radio controlled vehicles imported with the hand-held transmitters are classifiable as claimed by the inquirer or are classifiable under the provision for other toys, not specially provided for, in item 737.95, TSUS.

Law and analysis.—Schedule 7, part 5, subpart E, headnote 2, TSUS, provides that "For the purposes of the tariff schedules, a toy is any article chiefly used for the amusement of children or adults."

The superior heading to item 737.15, TSUS, provides for "Model trains, model airplanes, model boats and other model articles, *all the foregoing whether or not toys* * * *." [Italic added.]

A model is a representation of a particular object having either a

present or prior physical existence, a contemplated future existence, or an existence in plans or drawings, literature, or folklore.

In the case of *Lohzin & Born* v. *United States*, 79 Cust. Ct. 34 C.D. 4710 (1977), the court suggested that to come within the common meaning of the term "model" an article need not be an exact or accurate representation of something in existence; "It is sufficient if it is more than a crude form of a class of articles and recognizably represents an article that existed in fact or legend".

In the case of *Arthur R. Sawers* v. *United States*, 60 Cust. Ct. 593, C.D. 3467 (1968), the court, in holding that model boats of superior quality and craftmanship were classifiable as models under item 737.15, TSUS, very liberally construed that provision, stating "that item 737.15, in providing for model boats, encompasses all forms of model boats irrespective of value, quality, or craftsmanship."

Clearly, the vehicles in issue being more than crude representations of the actual prototypes are models within the purview of item 737.15, TSUS, noting the cited court cases.

With respect to the entirety question, the court stated in the case of *Donald Ltd., Inc.* v. *United States*, 32 Cust. Ct. 310, C.D. 1619 (1954) that "If what is imported as a unit is actually and commercially two or more individual entities which, even though imported joined or assembled together, nevertheless, retain their individual identities and are not subordinated to the identity of the combination, duties will be imposed upon the individual entities in the combination as though they had been imported separately. Conversely, if they are imported in one importation separate entities, which by their nature are obviously intended to be used as a unit, or to be joined together by mere assembly, and in such use or joining the individual identities of the separate entities are subordinated to the identity of the combined entity, duty will be imposed upon the entity they represent.

It is our view that the model vehicles and the hand-held transmitters are not entireties for tariff purposes. An examination of the merchandise involved convinces us that the model vehicles and the hand-held transmitters, although packaged, imported, and sold together, retain their individual identities and are not subordinated to the identity of the combination.

It is to be noted that in a similar situation this office held, in a ruling abstracted as T.D. 56237 (118), that transformers imported with TT gauge model railroad equipment were separately classifiable as such under item 682.10, TSUS, and were not classifiable as entireties along with the other model railroad equipment under item 737.07, TSUS.

Holding.—The vehicles are classifiable under the provision for other models, in item 737.15, TSUS, and dutiable at the rate of 16.3 percent

ad valorem, or are entitled to free entry under the generalized system of preferences, if qualified.

The hand-held transmitters are classifiable pursuant to an established and uniform practice under the provision for radio remote control apparatus, in item 685.60, TSUS, and dutiable at the rate 7.2 percent ad valorem, or are entitled to free entry under the generalized system of preferences, if qualified.

(C.S.D. 81–23)

Classification: Application of C.A.D. 1243 and C.A.D. 1244 with respect to Timing Apparatus

Date: June 26, 1980
File: CLA–2:RRUC3C
063782 LLB

AREA DIRECTOR, U.S. CUSTOMS SERVICE,
Jamaica, N.Y.

DEAR SIR: In your memorandum of May 14, 1980 (CLA–2–K:C JM/AB), you forwarded the comments of your office relative to the recent decisions of the U.S. Court of Customs and Patent Appeals in the case of *United States* v. *Texas Instruments Inc.*, C.A.D. No. 1244 (decided April 17, 1980, regarding the application of this decision to watches and watch movements).

The court held that an integrated circuit chip on a substrate, imported to be included in the manufacture of a solid-state digital watch, was not a subassembly of a watch movement within the meaning of the Tariff Schedules of the United States (TSUS). A companion case (C.A.D. 1243), held that the VLED display element for a solid-state digital watch was not a watch dial within the meaning of the tariff schedules.

We are of the opinion that merchandise similar to that which was before the court in the two referenced cases shall be classified as determined by these decisions. The current classification practice with respect to all other articles covered in schedule 7, part 2, subpart E, will not be changed by the subject court cases.

(C.S.D. 81–24)

Classification: Machine-Threshed Cigar Tobacco; Scrap Tobacco

Date: June 29, 1980
File: CLA–2:RRUCGC
066021 JH

Your letter of May 19, 1980, concerns the application of T.D. 80–132 to cigar tobacco.

You note that the notice described the product in issue as machine-threshed cigarette leaf tobacco and your concern is whether cigar tobacco processed in a similar manner is to be similarly classified.

Part 13 of schedule 1, Tariff Schedules of the United States (TSUS), which covers tobacco and tobacco products, recognizes that there is a difference between cigar and cigarette tobaccos. This distinction has always been acknowledged by administrative decisions, which have also recognized that there is a difference in cigar tobaccos.

Customs has always recognized that the tobacco used as filler tobacco in cigars is of a different type than used in cigarettes, and undergoes processing which results in important differences in chemistry and taste of the leaf. The provisions in the tariff for cigar filler tobacco have always been interpreted as applying to long-filler tobacco leaves, which, when laid or folded together lengthwise, run the whole length of the cigar. In contrast, the short-filler or scrap cigar is said to be made up of scrap, cut, or broken tobacco. Accordingly, cigar filler tobacco is classified according to whether or not it was capable of being used as long-filler tobacco. Cigar filler tobacco which is not capable of being used for the long-filler tobacco cigars is classified as scrap tobacco. The numerous decisions on the subject recognized that the provision for scrap tobacco included tangled leaves of varying lengths, all of which could not economically be processed for use in long-filler cigars. The term "scrap tobacco" not only included production fragments or factory scraps but also manufactured scraps, which generally included the cheapest form of smoking tobacco which had been broken or cut. As to tobacco which has been cut, Customs has long been aware that such tobacco was often deliberately changed in condition to come within the scrap category.

In sum, cigar filler tobacco, which is not suitable for long-filler cigars by a long standing uniform and established practice, has been classified as scrap tobacco in item 170.60, TSUS. It is not the length of the tobacco which determines the classification, but its overall suitability for long-filler cigars.

There is no basis for applying this criteria—i.e., suitable for long-filler cigars to cigarette tobacco. Therefore, Customs is of the opinion that, since (1) cigar tobacco is distinguishable from cigarette tobacco, and (2) classification depends on end-product use, cigar tobacco processed in the manner described for use in short-filler or scrap cigars would be classifiable as scrap tobacco in item 170.60, TSUS.

(C.S.D. 81-25)

Classification: Whether Textile Pencil Loops On Boys' Denim Overalls Constitute Ornamentation

Date: July 11, 1980
File: CLA-2:RRUCGC
064148 PR

This ruling concerns the tariff classification of boys' denim overalls with pencil holder loops.

Facts.—The submitted sample is a pair of boy's bib-type denim overalls. Centered on the bib portion of the overalls is a large patch pocket. Directly above this patch pocket, a strip of matching textile fabric has been stitched to the garment to form four loops through which pencils may be inserted. A photocopy of this portion of the garment is attached.

Issue.—The only issue presented by the subject inquiry is whether the strip of fabric forming the pencil loops above the patch pocket on the bib of the subject overalls will cause that garment to be classified under the ornamented provisions of the tariff schedules.

Law and analysis.—Headnote 3, schedule 3, Tariff Schedules of the United States (TSUS), sets out the features which may cause a textile article to be classified as ornamented. One of the features specifically mentioned in headnote 3 is textile fabric. However, the term "ornamented" as defined in headnote 3, has been interpreted to mean that a textile article is not automatically considered ornamented for tariff purposes merely because of the presence of one of the enumerated features. To be ornamented for tariff purposes, one of the listed features must not only be present on the textile article, but that feature must primarily serve to adorn, embellish, decorate, or enhance the appearance of the article. Where a feature performs a functional purpose which is paramount to the decorative effect created, that feature will not cause the article to be classified under the ornamented provisions of the tariff schedules. *Blairmoor Knitwear Corp.* v. *United States*, 60 Cust. Ct. 388, C.D. 3396 (1968).

As can be seen from the attached photocopy, the fabric loops do function to hold pencils and pens in place. Therefore, following *Blairmoor*, what must be determined is whether the functionality of the textile strip forming the pencil loop is outweighed by the visual effect that strip imparts to the garment. In this instance, considering the color, type of fabric used, size and location of the textile strip forming the pencil loops, and the type of garment on which that strip is located, it does not appear that the strip performs a primarily decorative function.

However, we believe it is pertinent to discuss the three reasons advanced to this headquarters for classifying the sample garment under the ornamented provisions of the tariff schedules. The first reason advanced is that while bib pockets of the type found on the subject garment are often divided into small compartments, this was not done in this instance. The manufacturer, rather, achieved the same effect by adding the additional strip of fabric in the form of loops to hold the pencils. In this regard, *Blairmoor* specifically stated that the question of ornamentation of a garment was to be resolved based on the condition of that garment as imported and not on its condition as it could have been made.

In T.D. 56190 (223), Customs held that textile loops on boys' camping shorts would not cause those shorts to be ornamented for tariff purposes. Further, the Customs Service ruled on September 17, 1979, file 061456, that a child's bib cotton denim overall was not ornamented for tariff purposes because of the presence of a V-shaped pocket with decorative stitching that formed three compartments of limited depth. Those compartments were capable of holding small articles such as crayons or pencils. In that ruling, it was stated, "The Customs Service does not assume that children will not use this pocket for the use for which it was intended."

It is also contended that the pencil loops are not functional because the overall "is not so intrinsically connected with school activities" which would require the use of pencils by the wearer of the garment. This theory of classification is unacceptable. First, the Customs Service is aware of no garment, other than certain uniforms which are required by some private schools, that are intrinsically connected with school activities. Second, garments of the type here presented can, and very probably would, be worn by small children, on an occasional basis, to school. Third, such a position overlooks the fact that children do use pencils and pens when playing in and around the house.

The third reason advanced for calling the fabric strip forming a pencil loop ornamentation is that the feature is analogous to an epaulet, a feature that can be used, but rarely is, and, therefore, is considered ornamentation on most garments. Proceeding on such a theory would put Customs into a position of making determinations on the classification of garments based on an individual's perception of whether certain features would or would not be used. The result would be confusion and a lack of uniformity in the classification of merchandise. The subject pencil loops are not in the same class or category as epaulets. Epaulets have evolved through years of use from what was once a part of the garment intended for both functional and decorative purposes to become a styling feature on a wide as-

sortment of garments. Therefore, the pencil holder loops cannot validly be compared to epaulets.

Holding.—Based on the above, the fabric strip forming pencil loops on the sample garment does not constitute ornamentation for tariff purposes.

U.S. Customs Service

General Notice

American Manufacturer's Petition

Decision denying American manufacturer's petition requesting the reclassification of radio remote control apparatus: Petitioner's desire to contest this decision

AGENCY: U.S. Customs Service, Department of the Treasury.

ACTION: Notice of (1) decision on American manufacturer's petition, and (2) receipt of notice of petitioner's desire to contest the decision.

SUMMARY: In response to an American manufacturer's petition requesting that radio remote control apparatus designed to be used with toy and model airplanes, boats, tanks, and similar articles, be reclassified under the provision for toys, and parts of toys, not specially provided for, other, in item 737.95, Tariff Schedules of the United States (TSUS) (19 U.S.C. 1202), Customs advised the petitioner that such radio remote control apparatus would continue to be classified under the provision for radio remote control apparatus in item 685.60, TSUS. Upon being informed that its petition had been denied, the petitioner filed notice of its desire to contest the decision.

FOR FURTHER INFORMATION CONTACT: Donald F. Cahill, Classification and Value Division, U.S. Customs Service, 1301 Constitution Avenue NW., Washington, D.C. 20229; 202-566-8181.

SUPPLEMENTAL INFORMATION:

BACKGROUND

A petition was filed under section 516, Tariff Act of 1930, as amended (19 U.S.C. 1516), by Kraft Systems, Inc., of Vista, Calif., an American manufacturer, requesting that imported radio remote control apparatus, designed to be used with toy and model airplanes, boats, tanks, and similar articles, be reclassified under the provision for toys, and parts of toys, not specially provided for, other, in item 737.95, Tariff Schedules of the United States (TSUS) (19 U.S.C. 1202). Radio remote control apparatus is specifically provided for, and uniformly classified by Customs, under item 685.60, TSUS. Notice of

the petition was published in the Federal Register on May 10, 1979 (44 F.R. 27528).

In support of its contention that the radio remote control apparatus involved is properly classifiable as a toy under item 737.95, TSUS, the petitioner made the following arguments:

(1) The intent of Congress was to include only extremely sophisticated military and scientific radio remote control apparatus in the provision for radio remote control apparatus in item 685.60, TSUS; and

(2) Radio remote control apparatus which is used with toys and model airplanes, boats, tanks, and similar articles, is classifiable according to its chief use, i.e., toys for the amusement of children or adults.

Customs is of the position that the legislative history to item 685.60 TSUS, does not support the petitioner's contention that only sophisticated military and scientific radio remote control apparatus were intended by the Congress to be included under this item of the tariff schedules.

Further, Customs does not believe that the radio remote control apparatus involved can be classified as a toy under item 737.95, TSUS, because it does not provide amusement in and of itself. It amuses only in connection with model airplanes, boats, tanks, and similar articles. See *Mattel Inc.* v. *United States*, 61 Cust. Ct. 75, C.D. 3531 (1968).

DECISION ON PETITION AND RECEIPT OF PETITIONER'S NOTICE OF DESIRE TO CONTEST

By letter dated October 2, 1980, file No. 521489, the petitioner was advised that his petition was denied and that Customs would adhere to its practice of classifying radio remote control apparatus designed to be used with toy and model airplanes, boats, tanks, and similar articles under the provision for radio remote control apparatus in item 685.60, TSUS.

In response, by letter dated October 30, 1980, the petitioner filed notice of its desire to contest this decision in accordance with section 516(c), Tariff Act of 1930, as amended (19 U.S.C. 1516(c)), and section 175.23, Customs Regulations (19 CFR 175.23). However, under section 516(d), Tariff Act of 1930, as amended (19 U.S.C. 1516(d)), the current Customs practice of classifying this type of radio remote control apparatus under item 685.60, TSUS, will continue so long as no decision of the U.S. Court of International Trade or the U.S. Court of Customs and Patent Appeals not in harmony with this practice is published.

AUTHORITY

This notice is being published in accordance with section 516(c), Tariff Act of 1930, as amended (19 U.S.C. 1516(c)), and section 175.24, Customs Regulations (19 CFR 175.24).

DRAFTING INFORMATION

The principal author of this document was Barbara E. Whiting, Regulations and Information Division, Office of Regulations and Rulings, U.S. Customs Service. However, personnel from other Customs offices participated in its development.

Dated: Jan. 8, 1981.

WILLIAM T. ARCHEY,
Acting Commissioner of Customs.

[Published in the Federal Register, Jan. 19, 1981 (46 F.R. 5120)]

United States Court of International Trade

One Federal Plaza
New York, N.Y. 10007

Chief Judge

Edward D. Re

Judges

Paul P. Rao
Morgan Ford
Scovel Richardson
Frederick Landis
James L. Watson
Herbert N. Maletz
Bernard Newman
Nils A. Boe

Senior Judge

Samuel M. Rosenstein

Clerk

Joseph E. Lombardi

Decisions of the United States Court of International Trade

(Slip Op. 80–15)

THE BUDD COMPANY, RAILWAY DIVISION, PLAINTIFF *v.* UINTED STATES, DEFENDANT, NISSHO-IWAI AMERICAN CORPORATION AND KAWASAKI HEAVY INDUSTRIES, LTD., INTERVENORS, PARTIES-IN-INTEREST; AND BREDA COSTRUZIONI FERROVIARIE, S. P. A., INTERVENOR, PARTY-IN-INTEREST

Opinion and Order

Court No. 80–3–00505

[Motion by plaintiff for summary judgment and cross-motions by defendant and intervenors parties-in-interest for summary judgment. Remanded for further consideration by the International Trade Commission.]

(Dated December 29, 1980)

Barnes, Richardson & Colburn (*Andrew P. Vance* and *Raymond F. Sullivan* on the briefs) for the plaintiff.

Alice Daniel, Assistant Attorney General; *David M. Cohen*, Director, International Trade Field Office, Commercial Litigation Branch (*Francis J. Sailer* on the brief) for THE UNITED STATES, Defendant.

Arent, Fox, Kintner, Plotkin & Kahn (*Stephen L. Gibson* and *Evan R. Berlack* on the briefs) for NISSHO-IWAI AMERICAN CORPORATION and KAWASAKI HEAVY INDUSTRIES, LTD., Intervenors Parties-in-Interest.

Bosco & Curry (*Joseph A. Bosco* on the briefs); *Landfield, Becker & Green* (*William W. Becker* on the briefs) for BREDA COSTRUZIONI FERROVIARIE, S.p.A., Intervenor Party-in-Interest.

BOE, Judge: The plaintiff, The Budd Company, Railway Division, which assembles rail passenger cars as well as manufactures certain components and parts therefor at its plant in Philadelphia, Pa., brings this action under section 516(a)(1)(D) of the Tariff Act of 1930 as amended by the Trade Agreements Act of 1979 contesting the preliminary determination by the U.S. International Trade Commission (Commission) of "No Reasonable Indication of Material Injury" in *Rail Passenger Cars and Parts Thereof Intended for Use as Original Equipment in the United States from Italy and Japan*. Investigations Nos. 731–TA–5 and 6 (Preliminary). 45 F.R. 11942–43 (published Feb. 22, 1980).[1]

The antidumping investigative proceedings instituted by the Commission pursuant to the petition filed by the plaintiff relate specifically to contracts executed between: (1) The Greater Cleveland Regional Transit Authority and Breda Costruzioni Ferroviarie, S.p.A. (Breda) of Italy in 1978 for the purchase of 48 light rail vehicles; (2) the Southeastern Pennsylvania Transportation Authority and Nissho-Iwai American Corp. and Kawasaki Heavy Industries, Ltd., (Nissho-Iwai) of Japan in 1979 for the purchase of 141 light rail vehicles; (3) the Washington Metropolitan Area Transit Authority and Breda of Italy in 1979 for the purchase of 94 rapid transit cars.

In this action the plaintiff requests that the court: (1) Find the preliminary determination by the Commission that there is no reasonable indication that an industry in the United States is materially injured or threatened with material injury by reason of the importation from

---

[1] The Trade Agreements Act of 1979 expressly repeals the Antidumping Act of 1921 and prescribes, inter alia, the procedures and standards for the administrative determinations that are a prerequisite to the imposition of antidumping duties. The act further provides for judicial review of those administrative determinations defining the scope and standard of such review. A significant departure from the old law governing antidumping duty proceedings is found in the judicial review of preliminary administrative determinations as evidenced by the Commission's preliminary determination before this court in the present action.

Except as otherwise specifically cited, all references hereinafter made to the provisions of the Trade Agreements Act of 1979 shall bear the citations to the respective sections of the Tariff Act of 1930, which the former amends.

Italy and Japan of rail passenger cars and parts thereof intended for use as original equipment in the United States, which are allegedly sold at less than fair value, is arbitrary, capricious, an abuse of discretion, or otherwise not in accordance with law, and, therefore, unlawful under section 516(b)(1)(A) of the Tariff Act of 1930, and (2) make an affirmative determination of a reasonable indication of material injury with respect to the products that were the subject matter of the Commission's investigation.

The administrative proceedings concerning which judicial review is herein sought may be summarized as follows:

On October 16, 1979, plaintiff submitted to the Commissioner of Customs, Department of the Treasury, a "Petition for the Imposition of Antidumping Duties on Rail Passenger Cars from Japan and Italy," pursuant to the Antidumping Act of 1921.

On November 27, 1979, an Antidumping Proceeding Notice was published in the Federal Register advising that a petition in proper form had been received and that after a summary investigation had been conducted a full-scale antidumping investigation was "being initiated for the purpose of determining whether imports of rail passenger cars and parts thereof which are intended for use as original equipment in the United States from Japan and Italy are being, or likely to be, sold at less than fair value within the meaning of the Antidumping Act of 1921, as amended." 45 F.R. 67747 (1979).

No preliminary determinations nor final determinations under the provisions of the Antidumping Act of 1921 as to the question of less than fair value sales had by January 1, 1980, been made by the Secretary of the Treasury in the antidumping cases involving rail passenger cars from Italy and Japan. Accordingly, pursuant to section 102(b) of the Trade Agreements Act of 1979, those cases were forthwith referred to the Commission for determinations of reasonable indications of injury.

On January 14, 1980, a Notice of Institution of Preliminary Antidumping Investigation and Scheduling of Conferences was published in the Federal Register advising that, effective January 1, 1980, the Commission was instituting Antidumping Investigations Nos. 731–TA–5 and 6 (Preliminary), and that the Director of Operations of the Commission had scheduled a conference on January 29, 1980, at which time parties in support and in opposition to the antidumping petition would receive an opportunity to make oral presentations. Written statements of information pertinent to the subject matter of the investigations were to be submitted before February 1, 1980. 45 F.R. 2715 (1980).

On January 29, 1980, a conference was held at which time the respective parties to this action submitted testimony and exhibits. The testimony submitted was not subject to cross-examination.

On February 11, 1980, the Commission made a unanimous negative preliminary determination with respect to the subject matter under investigation, and on February 22, 1980, a notice of "Determination of 'No Reasonable Indication of Material Injury'" was published in the Federal Register. 45 Fed. Reg. 11942 (1980).

On March 24, 1980, the within action was commenced in the United States Customs Court pursuant to section 516A(a)(1)(D), Tariff Act of 1930, by the concurrent filing of a summons and complaint. The proceeding is presently before this court on a motion for summary judgment filed by the plaintiff and a cross-motion for summary judgment filed by the defendant, the United States, and the intervenors parties-in-interest.[2]

In the review of the negative preliminary determination of the Commission by this court, the scope thereof encompasses only the information before the Commission at the time the determination was made, including any information that has been compiled as a part of a formal record. S. Rep. No. 249, 96th Cong., 1st sess. 248.

The standard of review to be followed by this court has been clearly defined in section 516A(b)(1)(A), Tariff Act of 1930, providing:

> (b) Standards of Review.—
> Remedy.—The court shall hold unlawful any determination, finding, or conclusion fund—
> (A) in an action brought under paragraph (1) of subsection (a),to be arbitrary, capricious, an abuse of discretion, or otherwise not in accordance with law, or * * *.

Legislative history evidences the intent of Congress with respect to the criteria to be followed by the court in its evaluation of the findings of the Commission:

> Section 516A would make it clear that traditional administrative law principles are to be applied in reviewing antidumping * * * duty decisions were by law Congress has entrusted the decisionmaking authority in a specialized, complex economic situation to administrative agencies. Thus, review of any determination listed in subsection (a)(1) would be to ascertain whether there was a rational basis in fact for the determination by the administrative decisionmaker. S. Rept., supra, at 252.

The application of this standard of review by the reviewing court has been succinctly stated by the U.S. Supreme Court in the case of *Bowman Transportation* v. *Arkansas-Best Freight Systems, Inc.*:

> A reviewing court must consider whether the decision was based on a consideration of the relevant factors and whether there has been a clear error of judgment * * *. Although this inquiry into

---

[2] Under the rules of this court effective November 1, 1980, the time-consuming delay connected with the utilization of the procedure providing for motions and cross-motions for summary judgment can be avoided, thus permitting a more expeditious review by this court in keeping with congressional intent.

> the facts is to be searching and careful, the ultimate standard of review is a narrow one. The court is not empowered to substitute its judgment for that of the agency. [Citation omitted.] The agency must articulate a rational connection between the facts found and the choice made. [Citation omitted.] While we may not supply a reasoned basis for the agency's action that the agency itself has not given [citation omitted], we will uphold a decision of less than ideal clarity if the agency's path may reasonably be discerned. 419 U.S. 281, 285–6 (1974).

Having recognized the narrow standard by which the court must predicate its review of the Commission's determination in the within action, it is proper that, prior to an evaluation of the specific findings as made by the Commission, we look to the function and obligation of that body in the performance of its investigative prerogatives authorized by the statute:

The preliminary determination by the Commission required by section 733(a) must be "based upon the best information available to it at the time of the determination." Although recognizing the restrictions placed upon an investigation by virtue of a 45-day time limitation, Congress has prescribed a thorough investigation by the Commission prior to the making of its preliminary determination:

> The time limit provided in the bill for an ITC preliminary determination, although longer than that under present law, is still quite brief. It is therefore intended that the ITC will investigate the allegations in the petition in as thorough a manner as possible using the information available within that time period, and will provide interested parties a reasonable opportunity to present their veiws. Such opportunity does not necessarily include a hearing such as that required prior to a final determination. H.R. Rep. No. 317, 96th Cong., 1st sess. 61.

From the provisions of the Trade Agreements Act of 1979, it appears clear that Congress anticipates that the Commission take an active role in obtaining information prior to its determination:

> (b) DETERMINATIONS TO BE MADE ON BEST INFORMATION AVAILABLE.—In making their determinations under [title VII of the Tariff Act of 1930], the administering authority and the Commission shall, whenever a party or any other person refuses or is unable to produce information requested in a timely manner and in the form required, or otherwise significantly impedes an investigation, use the best information otherwise available. Section 776(b).

Congress also has observed that "[t]he nature of the [Commission's] inquiry may vary from case to case depending on the nature of the information available and the complexity of the issues." S. Rept., supra, at 66. Although an initiating petition filed with the administering authority and the Commission pursuant to section 732(a) must be accompanied by information reasonably available to the petitioner

supporting the allegations in the petition, the affirmative obligation and duty of the Commission to conduct a thorough investigation is not relieved thereby. By explanation the House Committee has stated in its report:

> The Committee has long been concerned that petition requirements not be so onerous as to preclude petitioners presenting meritorious complaints from obtaining the remedy provided by law. The Committee therefore intends that no petitioner shall be required to provide information not reasonably available to him. * * * The petitioner will be expected to use reasonable efforts to collect information from public and industry sources. H. Rept., supra, at 60.

The information which reasonably would be available to a petitioner is governed to a great extent by the nature of the proceedings. Congress has recognized that the administrative proceedings under title VII of the Tariff Act of 1930 are investigatory, not adjudicatory. H.R. Rept., supra, at 77; S. Rept., supra, at 100. Accordingly, no procedure has been established by statute nor by regulation promulgated thereto providing for discovery of an opposing party prior to or at the time of the investigation. In the preliminary determination proceedings of the Commission, presently under review in this court, no hearing is required to be provided. A conference may be held by the staff of the Commission at which interested parties may present their views without the opportunity for cross-examination.

The statutory provisions of the Trade Agreements Act of 1979, indeed, clearly express the congressional intent that the Commission will obtain information through its own investigative sources. Section 777 provides for access of interested parties to information both confidential and nonconfidential which has been received by the Commission in connection with its investigation. It specifically requires the Commission, upon request, to inform the parties to an investigation of the progress thereof. Section 777(a)(2). Among the reasons given for the enactment of this section, Congress has referred to the complaint of domestic industries in which they contend that their ability to obtain relief under prior laws has been impaired by their lack of access to the information presented. In light of the investigative posture of the administrative proceedings and the newly enacted judicial review procedure, the need to insure that all interested parties are fully aware of all information presented is imperative. H.R. Rept., supra, at 77. In this connection it is worthy of note that at this stage of the administrative proceedings, the determination of which is herein under review, it is the Commission which has the sole authority to seek both confidential and nonconfidential information from the parties supported by a subpena power granted by statute and provided for in

the Commission regulations. 19 U.S.C. section 1333(a) (1976); 44 F.R. 76470–71 (1979).

Within the scope and standard of the judicial review provided by the Trade Agreements Act of 1979, the court now directs its attention to the record of the administrative proceedings pending before it. Examination thereof clearly indicates the correctness of the Commission's negative finding with respect to the material injury or threat of material injury to an industry in the United States resulting from the importation of finished rail passenger cars. From the record it affirmatively appears that the plaintiff, as the sole active prime contractor dealing in the assembly of rail passenger cars in the United States at the time of the Commission's determination, constitutes this entire industry.

Regulations issued by the Urban Mass Transportation Authority, implementing the "Buy America" provisions contained in the Surface Transportation Assistance Act of 1978, provide (1) that the cost of the domestic components of a product, involved in a project in excess of $500,000, must exceed 50 percent of the cost of all its components, and (2) that the final assembly of the components to form the end product must take place in the United States. 49 CFR 660.22 (1979). The unrebutted evidence in the record discloses that in the Washington contract, the instrument itself included the stipulation that the "Buy America" provision would be complied with. In the Cleveland contract, executed prior to the enactment of the "Buy America" provisions, the final assembly of the rail passenger cars was expressly agreed to be performed within Cuyahoga County, Ohio, United States. The record further discloses that Breda will use approximately 45 percent of American components and parts in the final assembly. The plaintiff in its original petition to the Commissioner of Customs, Department of the Treasury, has acknowledged that in the Southeastern Pennsylvania Transportation Authority (SEPTA) contract, although not a part of the record before this court, and presumably not examined by the Commission, compliance with the regulation relating to the Buy America provisions had been specifically agreed to.[3]

It would thus appear that the challenge of the petitioner to the findings of the Commission that there is no reasonable indication of material injury or threatened material injury to an industry in the United States by reason of the importation of finished rail passenger cars is without merit. Where in connection with the three contracts aforereferred to, it affirmatively appears without contradiction from the contract provisions or from supplementary testimony that the

[3] *Washington Contract:* Administrative Record—Public Documents Transmitted to the U.S. Customs Court (Public Documents) No. 33(6), Amendment No. 9 to Invitation for Bid No. IFB–C–295 at BF–5.
Cleveland Contract: Public Document No. 33(7d) at 9; Public Document No. 30 at 91–92.
Reference to SEPTA Contract: Public Document No. 33(4) at 12.

assembly of the respective rail passenger cars will be made in the United States, incorporating a significant percentage of the U.S.-made parts and components, a finding by the Commission that a material injury or threat of material injury exists to the rail passenger car industry by virtue of the importation of finished rail passenger cars from Italy and Japan would have been not only directly contrary to the undisputed evidence, but, indeed, arbitrary, capricious, an abuse of discretion, or otherwise not in accordance with law.

In the opinion of this court, however, the thrust of plaintiff's challenge to the Commission's negative determination with respect to its petition for the initiation of an antidumping duty investigation is misplaced. Only negligible attention has been given by the plaintiff, the intervenors parties-in-interest and by the Government to the allegations contained in the petition with respect to the material injury or threat thereof to an industry in the United States by reason of the imports from Italy and Japan consisting of components and parts of the rail passenger cars. Nor does it appear from the record before the court that the Commission has made a thorough investigation required of it by statute with respect to:

(1) the sources, volume and prices of the components and parts contemplated to be imported in connection with the contracts in question;

(2) the domestic suppliers of like components and parts in the United States; and

(3) the material injury or threat of material injury resulting thereto by reason of such importations.

From the findings of fact and the administrative record before the court, it would appear that there has been a lack of diligence by the Commission in seeking information available to it in the absence of such evidence having been presented by any of the parties to the investigative proceedings. The Commission, having in findings Nos. 3 and 4 recognized that the prime contractors intended to import certain components and parts of rail passenger cars in the performance of the three contracts in question, seeks to justify its abstention from any further investigative responsibility by the adoption of finding No. 5 providing:

> The Commission sought, but neither the petitioner nor any domestic manufacturer of car body shells and parts for truck assemblies came forward with any specific information or even allegations concerning the quantity or value of imported components. The only specific information available to the Commission at this time is that there have been no imports of these components by either respondent. (Staff report, p. A–8; transcribed staff briefing, conference transcript at 77, 100).

In support of the Commission's apparent position, defendant and intervenors parties-in-interest have urged in their memorandum briefs to this court that upon the plaintiff, as petitioner, rests the burden of proof of all facts necessary to establish a reasonable indication of a material injury or threat thereof. No reference to any burden of proof is contained in the Trade Agreements Act of 1979, nor in the House Committee Report, nor in the Statement of Administrative Action thereon. The sole reference made thereto is contained in the Senate Committee Report wherein the "reasonable indication" standard of the statute is explained:

> The committee intends the reasonable indication standard to be applied in essentially the same manner as the reasonable indication standard under section 201(c)(2) of the Antidumping Act has been applied. The burden of proof under section 733(a) would be on the petitioner. S. Rep., supra, at 66.

Whatever significance the foregoing statement should receive, it is manifest that the term "burden of proof" used in an investigative proceeding does not have the same meaning as when used in an adjudicatory proceeding. Clearly, in the latter instance the bearer of this burden would have a more extensive means of obtaining information to satisfy that burden.

It is the opinion of this court that the oblique reference to burden of proof contained solely in the Senate Committee Report can neither qualify nor minimize the duties or obligation imparted by the explicit language of the statute and the legislative history charging the Commission to make its preliminary determination based upon the best information available. It must be emphasized that this mandate does not limit the best information available to that furnished by the petitioner or by any party-in-interest to the proceedings. The term "available" as used in the statute must be construed in accordance with its common meaning. In so doing, it is clear that all information that is accessible or may be obtained, from whatever its source may be, must be reasonably sought by the Commission.[4] It is only in this manner that the Commission can comply with the intended congressional mandate to conduct a thorough investigation.

Turning to the findings of fact made by the Commission in support of its negative determination, the court confesses it has encountered difficulty in ascertaining the basis of the Commission's determination as well as in ascertaining the connection between the findings adopted and its negative determination.

The Statement of Administrative Action proposed to implement the Trade Agreements Act of 1979 advises that "[a] written statement of the reasons for the Commission's decisions on all material

[4] Webster's Third International Dictionary (1966).

issues of law or fact presented shall be available to the parties and the public." Statement of Administrative Action at 27.[5] The importance of a statement of reasons given in support of an administrative determination has been clearly recognized by the Supreme Court in the case of *Securities and Exchange Commission* v. *Chenery*, 322 U.S. 194, 196 (1947):

> [A] reviewing court in dealing with a determination or judgment which an administrative agency alone is authorized to make, must judge the propriety of such action solely by the grounds invoked by the agency. If those grounds are inadequate or improper, the court is powerless to affirm the administrative action by substituting what it considers to be a more adequate or proper basis. To do so would propel the court into the domain which Congress has set aside exclusively for the administrative agency.
>
> We also emphasized in our prior decision an important corollary of the foregoing rule. If the administrative action is to be tested by the basis upon which it purports to rest, that basis must be set forth with such clarity as to be understandable. It will not do for a court to be compelled to guess at the theory underlying the agency's action; nor can a court be expected to chisel that which must be precise from what the agency has left vague and indecisive. In other words, "We must know what a decision means before the duty becomes ours to say whether it is right or wrong."

Inasmuch as the Commission has not delineated any statement of reasons, the court in a review of its administrative determination can look only to the findings of fact and conclusions of law adopted by the Commission. Indeed, an independent examination of the record, in the absence of any explicit statement of reasoning, leaves the court in a quandary as to the basis of and theory underlying the Commission's findings of fact and resulting determination.[6]

The Commission makes a finding that the future delivery of parts to be used in the assembly of the rail passenger cars is speculative as to their sources and prices (Finding of Fact No. 7). It further finds that the actual sources for nearly all of the parts which the respondents intend to import for use and assembly of rail passenger cars could be domestic "because of the long lead times on delivery of finished rail cars." (Finding of Fact No. 4). In the opinion of the court, the administrative record indicates on the contrary, that the sources of components and parts were largely determinable. The record contains the statement of Breda that it intends to import car

[5] H.R. Doc. No. 153, part II, 96th Cong., 1st sess. 415 (1979). The Statement of Administrative Action was expressly approved in section 2 of the Trade Agreements Act of 1979.

[6] The court has taken note that the findings of fact adopted by the Commission in the subject proceedings are in marked contrast to the findings adopted in other unrelated proceedings conducted by the Commission under the Trade Agreements Act of 1979 in which the reasoning of the Commission has been set forth with specificity and clarity.

body shells and truck assemblies for use in connection with the Washington contract. The record likewise reveals that in its technical proposal, accompanying its bid on and incorporated in the Washington contract, Breda specifies in writing that it will build car bodies and trucks at their plant in Italy.[7] Clearly, by its failure to recognize this contractual provision, included as a part of the administrative record, the Commission cannot be said to have based its finding on the best information available.

The record further discloses that with respect to the Cleveland contract, executed in February of 1978, it was agreed that within days after the execution of the agreement, Breda and the Greater Cleveland Regional Transit Authority would meet in order to select an approved list of component suppliers.[8] Again, this court is supplied with no information as to whether the Commission sought from either the Greater Cleveland Regional Transit Authority or Breda the list of approved suppliers that were thus selected.

In connection with the Southeastern Pennsylvania Transportation Authority (SEPTA) contract, the record further discloses that the attorney for Nissho-Iwai at the public conference conducted by the Commission staff appeared with a document which the attorney identified as containing the names of suppliers. Although the attorney indicated his wish not to make this document an exhibit in view of its presumed confidential nature,[9] the record indicates no effort on the part of the Commission to procure the same either by way of a formal request or by the utilization of its subpoena power. It would appear self-evident that this very document may have proved valuable with respect to determining the source of components in connection with the contract in issue and undoubtedly may have provided such information sufficient to clarify the speculation which apparently existed in the mind of the Commission as evidenced by finding of fact No. 7. It is particularly noted that no contract documents in connection with the SEPTA contract were forwarded to this court as a part of the record. Accordingly, it is presumed that the Commission did not have the same before it when it made its determination.

In finding of fact No. 5, afore-quoted in full, it is stated that: "[t]he Commission sought but neither the petitioner nor any domestic manufacturer of car body shells and parts for truck assemblies came forward with any specific information or even allegations concerning quantity or value of imported components." Although the components and parts in question may be imported into this country at a future date, to be utilized in the assembly of rail passenger cars of which

---

[7] Public Document No. 33(6) (Technical Proposal MS 107) at 1-1.
[8] Public Document No. 33(7d) at 5-7.
[9] Public Document No. 30 at 77.

the intervenors parties-in-interest are the prime contractors, the record discloses no information that the Commission sought from these very parties-in-interest the quantity or value of such components and parts that will be imported into the United States. The failure of the Commission to seek such information from the intervenors parties-in-interest, appearing in person before it, becomes even less understandable when, contrary to what the Commission has stated in finding of fact No. 5, plaintiff, Budd, has made specific allegations in its initiating petition with regard to the quantity and value of the parts that will be imported in connection with the SEPTA and Washington contracts.[10]

In findings of fact Nos. 8–12 the Commission, pursuant to its statutory obligations, considers the impact of imports on domestic producers of like products. From the foregoing findings it would appear that the Commission has erred in its concept as to the appropriate domestic industry upon which an impact of injury may be assessed. Section 771(4)(A) defines industry:

> (A) IN GENERAL.—The term "industry" means the domestic producers as a whole of a like product, or those producers whose collective output of the like product constitutes a major proportion of the total domestic production of that product.

In section 771(4)(D), the statute provides for the determination of those domestic products to be considered in assessing the material injury or threat thereof by reason of the imports in question:

> (D) PRODUCT LINES.—The effect of subsidized or dumped imports shall be assessed in relation to the United States production of a like product if available data permit the separate identification of production in terms of such criteria as the production process or the producer's profits. If the domestic production of the like product has no separate identity in terms of such criteria, then the effect of the subsidized or dumped imports shall be assessed by the examination of the production of the narrowest group or range of products, which includes a like product, for which the necessary information can be provided.

In the absence of having ascertained in its investigation the identity of the domestic producers of the components and parts in question as well as the percentage share of the total domestic market for these components made by various producers, including the plaintiff, Budd, the findings adopted by the Commission provide this court upon its

---

[10] Public Document No. 33(4) at tables 9–12.

Although Budd made no specific allegations in its initiating petition concerning the impact of components imported as "spare parts," pursuant to the contracts in question, this court questions the reasoning of the Commission in presumably not investigating such an impact, particularly in light of the provisions in the Washington contract specifying the per unit prices of spare parts which Breda recommended, and a date certain (falling in early January 1980) by which the transit authority would determine such quantities it would purchase. Public Document No. 33(6), invitation No. IFB–C–295: Spare parts; Public Document No. 33(6) Amendment No. 9 to invitation for bid No. IFB–C–295 at IFB–15.

review no rational basis upon which the negative determination of the Commission can be thereby predicated.[11]

In summary, it is the opinion of the court that the Commission has not conducted a thorough investigation with respect to the allegations by the plaintiff that the importations of components and parts of rail passenger cars materially injure or threaten to materially injure a domestic industry. It has been acknowledged by the Commission that such allegations are and have been within the scope of its investigation from the initiation thereof.

The court is not unmindful of the time limitation placed upon the Commission by statute in its investigation prior to the making of its preliminary determination. Notwithstanding the pressure of time, however, the court cannot determine that the Commission has adopted its findings of fact on a rational basis where, in adopting the finding that the quantity or value of imported parts in connection with the contracts in question are speculative, the record fails to disclose a proper effort by the Commission in the investigative proceedings to seek such information from the prime contractors involved, who, at all times, were before the Commission as respondents parties-in-interest. Nor can the court ascertain any rational basis for the finding of the Commission that the sources of all components and parts under the contracts in question may be domestic where no apparent attention was given to the Washington contract in which it expressly appears in writing that the components and parts under investigation are to be produced in Italy.

Neither has the Commission conducted a thorough investigation commensurate with congressional intent, nor has it sought the best information available as required by statute.

In view of the foregoing, the court is compelled to remand the instant proceedings to the Commission for further consideration of that nformation presently included in the administrative record as well as the best information which would have been available at the time of the original investigation and which might have been obtained from the intervenors parties-in-interest and the domestic industry relating to: (1) The sources and prices of the components and parts for the rail passenger cars to be imported into the United States in connection with the contracts in question herein, and (2) the impact upon the relevant industry by reason of such imports. Within a period of 30

---

[11] In a colloquy between a member of the Commission and a senior investigator, it is evidenced that no information was sought nor received by the Commission from other domestic companies which formerly had produced rail passenger cars in the United States as to what components and parts, if any, they presently produce. Nor was any communication had between the Commission and any other domestic producers of the components and parts in question (Public Document No. 63 at 5, 7), notwithstanding that the record discloses the identity of certain domestic producers of such components and parts. Public Document No. 33(6), Amendment No. 9 to Invitation for Bid No. IFB-C-295 at IFB-3; Public Document No. 33(2) at figures 17, 18.

days from the date of entry of this order, the Commission shall supplement its present findings of fact by the adoption of such additional findings and resulting conclusions of law as may be warranted, and upon further consideration of its determination, as might be necessitated thereby, submit all of the foregoing to this court.

Accordingly, the within action is remanded for further proceedings not inconsistent with this opinion.

(Slip Op. 80–16)

ROYAL BUSINESS MACHINES, INC., PLAINTIFF *v.* UNITED STATES, PHILIP M. KLUTZNICK, SECRETARY OF COMMERCE; ROBERT E. HERZSTEIN, UNDER SECRETARY OF COMMERCE FOR INTERNATIONAL TRADE, DEPARTMENT OF COMMERCE; ROBERT E. CHASEN, COMMISSIONER OF CUSTOMS, LOS ANGELES, CALIF., DEFENDANTS; SMITH-CORONA GROUP, CONSUMER PRODUCTS DIVISION, SCM CORPORATION, INTERVENOR

Decision and Order

Court No. 80–11–00056

(Dated December 29, 1980)

Rode & Qualey for the plaintiff (*Michael S. O'Rourke* and *Patrick Gill* of counsel).
Richard F. Treacy, Jr., Assistant General Counsel for the plaintiff.
Alice Daniel, Assistant Attorney General, for the defendants (*Velta A. Melnbrencis* of counsel).
Eugene L. Stewart for the intervenor (*Terence P. Stewart* of counsel).

WATSON, Judge: Plaintiff, the importer of a typewriter known as the Royal Administrator, brought this action on November 18, 1980, pursuant to 5 U.S.C. 702 [1] and 28 U.S.C. 1581(i) [2] asking the Court

---

[1] § 702. *Right of review.*
A person suffering legal wrong because of agency action, or adversely affected or aggrieved by agency action within the meaning of a relevant statute, is entitled to judicial review thereof. * * *

[2] § 1581. *Civil actions against the United States and agencies and officers thereof.*

* * * * * * * * *

(i) In addition to the jurisdiction conferred upon the Court of International Trade by subsections (a)–(h) of this section and subject to the exception set forth in subsection (j) of this section, the Court of International Trade shall have exclusive jurisdiction of any civil action commenced against the United States, its agencies, or its officers, that arises out of any law of the United States providing for—
(1) revenue from imports or tonnage;
(2) tariffs, duties, fees, or other taxes on the importation of merchandise for reasons other than the raising of revenue;
(3) embargoes or other quantitative restrictions on the importation of merchandise for reasons other than the protection of the public health or safety; or
(4) administration and enforcement with respect to the matters referred to in paragraphs (1)–(3) of this subsection and subsections (a)–(h) of this section.

to exercise its power under 28 U.S.C. 1585[3] and 2643(c)(1)[4] to enjoin defendants from retroactively modifying the antidumping duty order of May 9, 1980,[5] to include the Royal Administrator typewriter and further asking the court to direct the appropriate officials to liquidate entries of the typewriter and cancel the antidumping bonds which had been required on entries of that typewriter. A temporary restraining order was issued and was extended until the hearing on

[3] § *1585. Powers in law and equity.*

The Court of International Trade shall possess all the powers in law and equity of, or as conferred by statute upon, a district court of the United States.

[4] § *2643. Relief.*

* * *

(c)(1) Except as provided in paragraphs (2), (3), of this subsection, the Court of International Trade may, in addition to the orders specified in subsections (a) and (b) of this section, order any other form of relief that is appropriate in a civil action, including, but not limited to, declaratory judgments, orders, remand injunctions, and writs of mandamus and prohibition.

[5] Antidumping Duty Order.

19 CFR PART 353

PORTABLE ELECTRIC TYPEWRITERS FROM JAPAN; ANTIDUMPING DUTY ORDER

AGENCY: U.S. Commerce Department.

ACTION: Antidumping Duty Order.

SUMMARY: This notice is to inform the public that separate investigations conducted under the Antidumping Act, 1921, and its superseding legislation, the Tariff Act of 1930, as amended, by the Commerce Department, the Treasury Department and the U.S. International Trade Commission have resulted in determinations that portable electric typewriters from Japan are being sold at less than fair value and that these sales are materially injuring an industry in the United States. All unappraised entries of this merchandise made on and after January 4, 1980, the date on which liquidation was suspended, will be liable for the possible assessment of special dumping duties. Deposits of estimated antidumping duties shall be required of all entries made on and after the date of publication of this antidumping duty order in the Federal Register.

EFFECTIVE DATE: May 9, 1980.

FOR FURTHER INFORMATION CONTACT: Steven Lim, Office of Investigations, International Trade Administration, U.S. Commerce Department, 14th St. and Constitution Avenue NW., Washington, D.C. 20230; telephone: 202-377-1776.

SUPPLEMENTARY INFORMATION: Section 201(a) of the Antidumping Act, 1921, as amended (19 U.S.C. 160(a)) gave the Secretary of the Treasury responsibility for determining whether imported merchandise is being sold at less than fair value. Pursuant to that authority, the Secretary of the Treasury tentatively determined that portable electric typewriters from Japan are being sold at less than fair value within the meaning of section 201(a) of the Antidumping Act of 1921 (19 U.S.C. 160 a)). (Published in the Federal Register of January 4, 1980 (45 F.R. 1220-2).) Pursuant to section 102(b)(2) of the Trade Agreements Act of 1979 (93 Stat. 189, 19 U.S.C. 1671) the tentative determination of the Secretary of the Treasury under the 1921 Act, was treated as a preliminary determination under section 730(b) of the Tariff Act of 1930, as amended (93 Stat. 163, 19 U.S.C. 1673b(b)) (the Act). Pursuant to section 735(a) of the Act (93 Stat. 169, 19 U.S.C. 1673d(a)), the administering authority made a final determination that portable electric typewriters from Japan are being sold at less than fair value. (Published in the Federal Register of March 21, 1980 (45 F.R. 18417-8).)

Section 735(b) of the Act (93 Stat. 170, 19 U.S.C. 1673d(b)), gives the U.S. International Trade Commission responsibility for determining whether by reason of such sales at less than fair value a domestic industry is being or is likely to be materially injured. The Commission has determined, and on May 1, 1980, it notified the Secretary of Commerce that an industry in the United States is materially injured by reason of the importation of portable electric typewriters from Japan that are being sold at less than fair value within the meaning of the Act.

In accordance with section 736 of the Act (93 Stat. 172, 19 U.S.C. 1673e), Customs officers are directed to assess an antidumping duty equal to the amount by which the foreign market value of the merchandise exceeds the U.S. price of the merchandise for all entries subject to the "Withholding of Appraisement" notice published in the Federal Register on January 4, 1979 (45 F.R. 1220-2) and all future entries until further notice. On or after the date of publication of this notice, Customs officers shall require, at the same time as estimated normal Customs duties on the merchandise are deposited, a deposit of estimated antidumping duties pending liquidation of entries of the subject merchandise on all entries, or withdrawals from warehouse, for consumption. Deposits shall be collected in the following amounts: Nakajima All: 4.36

the preliminary injunction on December 16, 1980, at which time an extension until December 30, 1980 was consented to.

Defendants have moved to dismiss for lack of jurisdiction and for summary judgment. The Smith-Corona Group, Consumer Products Division, SCM Corp., (hereinafter, SCM) was allowed to intervene and filed a motion to dismiss. SCM, a domestic manufacturer of typewriters, was the petitioner in the administrative proceeding of which the May 9th final order was an outgrowth.

At the hearing on plaintiff's motion for a preliminary injunction, responses to all pending motions were filed, following which some additional filings, mandatory and voluntary, were made.[6] Based upon all these papers and proceedings the court summarizes the history of this dispute as follows:

> On April 9, 1979, SCM filed a petition with the Commissioner of Customs for the initiation of an antidumping proceeding under 19 U.S.C. 160(c)(1979) (Current version at 19 U.S.C. 1673a(b)(1)). The Royal Administrator typewriter was included, among others, as the object of the petition. On May 18, 1979, the Treasury Department published a notice of the initiation of an investigation of whether the typewriters were being sold at less than their fair value (44 F.R. 29191). On November 15, 1979, it published notice of an extension of the investigation (44 F.R. 65853). On December 28, 1979, it then issued a notice of the withholding of the appraisement of the typewriters based on its tentative determination that they were being sold at less than their fair value. (45 F.R. 1220).

Thereafter, on January 1, 1980, the new antidumping law (contained in the Trade Agreements Act of 1979, Public Law 91-39) became effective; on January 2, 1980, the Treasury Department's

---

percent ad valorem; Silver Seiko: 36.53 percent ad valorem; Brother Industries: 48.70 percent ad valorem: for any other exporters of the subject merchandise: 37.12 percent ad valorem.

I hereby make public these determinations, which constitute an antidumping duty order with respect to portable electric typewriters from Japan.

For the purposes of this notice, the term "portable electric typewriters" are those provided for in item 676.0510, Tariff Schedules of the United States Annotated.

Accordingly, annex I, part 353 of the Commerce Regulations (19 CFR Part 353, 45 F.R. 8208) is being amended by adding the following to the list of antidumping duty orders currently in effect:

Merchandise	Country	Treasury decision
Portable electric typewriters	Japan	(45 FR——)

(Section 736 of the Act (93 Stat. 172, 19 U.S.C. 1673e), and Sec. 353.48 of the Department of Commerce Regulations (19 CFR 353.48, 45 F.R. 8204))

Dated: May 6, 1980.

JOHN D. GREENWALD,
Deputy Assistant Secretary for Import Administration.

[FR Doc. 80-14388 Filed 5-8-80; 8:45 am]

[6] On Dec. 19, 1980, defendants filed a letter requested by the court (discussed infra as court exhibit No. 1) and a letter-brief. Plaintiff filed a letter-brief with attachments on Dec. 23, 1980.

responsibility for the administration of that law was transferred to the Commerce Department by the President's Reorganization Plan No. 3 of 1979 (44 F.R. 69275 and 45 F.R. 9931) and on January 4, 1980, the Commerce Department referred the proceeding to the International Trade Commission for determination under 19 U.S.C. 1673d (Sec. 735 of the Tariff Act of 1930, as added by title I of the Trade Agreements Act of 1979) of whether a U.S. industry was being materially injured. Notice of the injury investigation was published by the ITC on January 17, 1980 (45 F.R. 3401).

On March 21, 1980, the Department of Commerce published a final determination under 19 U.S.C. 1673d(a) that the typewriters involved were being sold at less than fair value (45 F. R. 28416) and the ITC followed on May 7, 1980 with the publication of its final determination under 19 U.S.C. 1673d(b), that the sales were causing material injury to an industry in the United States. (45 F.R. 30186.)

The final determination of sales at less than fair value was directed to portable electric typewriters and made plain from its statement of reasons that the product of Silver Seiko, the manufacturer of the typewriter at issue, was included.

The final injury determination by the ITC specifically concluded that: "[T]he Royal Administrator * * * is appropriately considered a portable electric typewriter for the purposes of this investigation."

On May 9, 1980, the Department of Commerce published a Final Antidumping Duty Order (45 F.R. 30613) under the authority of 19 U.S.C. 1673e.[7] It directed Customs officers to assess antidumping duty against the merchandise subject to the previous withholding of appraisement and all future entries and to require the deposit of estimated antidumping duties on all the affected entries. The order was directed to portable electric typewriters and defined the term by reference to item 676.0510 of the Tariff Schedules of the United States, a statistical extension (for portable typewriters) of the TSUS item 676.05, covering all typewriters.[8] The description in the final order used the general language by which the subject of the administrative proceeding had been identified from the inception of the investigation.

---

[7] See note 5, supra.

[8] Cf:

Item	Stat. Suffix		
		Typewriters not incorporating a calculating mechanism:	
676.05		Non-automatic with hand-operated keyboard	free
		Portable:	
	10	Electric	
	30	Nonelectric	
		Other:	
	40	Electric	
	60	Nonelectric	

Plaintiff had steadfastly argued before the Commerce Department and the ITC that the Royal Administrator was not a portable typewriter. During the pendency of the investigations it assertedly received some encouragement on that point from the national import advisory specialist of the Customs Service and had been permitted by the Customs Service to make a few of its entries under a nonportable statistical number.

Following the publication of the antidumping duty order, plaintiff continued to press its cause before the Department of Commerce in a 27-page letter of May 30, 1980.[9] The Department of Commerce forwarded that letter with a request for the advice of the Customs Service as to the proper classification, inter alia, of the Royal Administrator, and stated that "[i]f the models in question are classified under item 676.0540, TSUS, [nonportable] they would not be within the scope of our antidumping duty order and would not be subject to antidumping duties." [10]

On August 7, 1980, the Customs Service sent its determination to the Department of Commerce including holdings to the effect that the Royal Administrator was an electric typewriter within statistical item 676.0540 [nonportable] and was therefore removed from the scope of the antidumping order and the finding of material injury.[11]

Thereafter, the Commerce Department evidently took the view that the Royal Administrator was included in its final antidumping duty order and, according to plaintiff, was about to issue a directive to that effect which Commerce termed "clarifying", but which plaintiff believed would place it under the antidumping order for the first time.[12]

In an affidavit accompanying defendant's motion for summary judgment, the Commerce Department takes the position that it has the responsibility and the authority to determine whether the Royal Administrator " * * * remains within the scope of the May 9, 1980, antidumping duty order" and has not yet made a determination of its position with respect to that question.[13]

---

[9] Exhibit 8 to Intervenor's memorandum.

[10] Court exhibit 1—letter of undecipherable date from Leonard M. Shambon, Director, Office of Compliance, International Trade Administration, U.S. Department of Commerce to Salvatore E. Caramagno, Director, Classification and Value Division of the Customs Service.

[11] Letter from Caramagno to Shambon. Exhibit F to plaintiff's memorandum in support of motion for preliminary injunction and writ of mandamus.

[12] Affidavit of Michael S. O'Rourke, Esq., attached to plaintiff's application for a temporary restraining order of Nov. 18, 1980

[13] Affidavit of John O. Greenwald, Deputy Assistant Secretary for Import Administration, U.S. Department of Commerce.

Counsel for the Government, in oral argument and in a letter-brief filed thereafter, attempted to limit the views expressed in the affidavit to the assertion of a power to clarify. However, counsel for the Government also offered the argument that if a modification changes the scope of a final antidumping duty order to include or exclude merchandise" * * * The order has the effect of a final determination and order" and would be judicially reviewable under 19 U.S.C. 1516a either as a review of a final determination or " * * * in the

(Continued)

The above brief history demonstrates what appears to be some confusion in the administration of the antidumping law, particularly with regard to the role of the antidumping duty order of 19 U.S.C. 1673e.[14]

SCM looked to the antidumping duty order as a clear final expression of the result of the previous less than fair value and injury determinations.

Plaintiff looked to the order as an indication that its typewriter was not included therein and further believed that this was the equivalent of not being aggrieved by any final agency determination. Accordingly, it did not commence the action for judicial review provided for in 19 U.S.C. 1516a(2)(B). Instead, in its view, it pressed the Department of Commerce to confirm the fact that its typewriter had not been included in the order.

The Department of Commerce evidently looked at the order as a malleable medium for expressing its own concept of the result of the previous administrative determinations, or as something within its authority to later modify.

The Customs Service evidently thought that, by virtue of its authority and expertise in matters of classification, (or at least as a result of the request for advice from Commerce) it could influence the interpretation or enforcement of the order.

All these views were mistaken to one degree or another. To a certain extent some confusion is understandable in the early phases of the administration of a law which is complex in its operation, demanding in the coordinated relationship it requires between three independent agencies, and particularly difficult for the way the

(Continued)

context of a civil action which contests either an early or a periodic duty determination." [19 U.S.C 1673e(c) or 19 U.S.C. 1675].

This argument first ignores the clear, albeit erroneous, import of the affidavit, and then strains to make judicial review under 19 U.S.C. 1516a the exclusive vehicle in all cases involving antidumping duties, ignoring the more direct use of 5 U.S.C. 702 and jurisdiction of 28 U.S.C. 1581(i) for those aggrievements for which 19 U.S.C. 1516a is not adequate. See H. Rept. 96-1235, 96th Cong., 2d sess., 48 (1980). See also, discussion of antidumping duty order in text, infra.

[14] § *1673e. Assessment of duty.*

(a) Publication of antidumping duty order.—Within 7 days after being notified by the Commission of an affirmative determination under section 1673(b) of this title, the administering authority shall publish an antidumping duty order which—

(1) directs Customs officers to assess an antidumping duty equal to the amount by which the foreign market value of the merchandise exceeds the U.S. price of the merchandise, within 6 months after the date on which the administering authority receives satisfactory information upon which the assessment may be based, but in no event later than—

(A) 12 months after the end of the annual accounting period of the manufacturer or exporter within which the merchandise is entered, or withdrawn from warehouse, for consumption, or

(B) in the case of merchandise not sold prior to its importation into the United States, 12 months after the end of the annual accounting period of the manufacturer or exporter within which it is sold in the United States to a person who is not the exporter of the merchandise.

(2) includes a description of the class or kind of merchandise to which it applies, in such detail as the administering authority deems necessary, and

(3) requires the deposit of estimated antidumping duties pending liquidation of entries of merchandise at the same time as estimated normal customs duties on that merchandati are deposited.

Department of Commerce is given decisional authority at some stages and denied it at others.

Nevertheless, the statutory scheme, as it bears on this dispute, is clear. The rights of the affected parties, the authority of the agencies, and their relationship are all precisely delineated.

To begin with, the issuance of a final antidumping duty order is purely a ministerial act. It is not the final expression of the administrative determinations. The final order is really the first step in the enforcement of the consequences mandated by statute when it has been determined that certain articles are being sold at less than their fair value and are materially injuring a domestic industry. It is the first step in the mandatory assessment of antidumping duty.[15]

It follows that plaintiff had no more reason to concentrate on the final order and believe itself unaggrieved than a judgment debtor has to think that a questionable execution removes it from a judgment.[16] It further follows that the final order must express the result of the previous determinations without alterations and neither the Commerce Department, as the administering authority, nor the Customs Service, by exercise of its classification authority, could legally change the results of the less than fair value and injury determinations or

---

[15] The importance placed by the legislature on the speedy and certain assessment of antidumping duties was the controlling reason for the strict terms of sec. 736 of the Trade Agreements Act of 1979 (19 U.S.C. 1673e.)

In its report, the Committee on Ways and Means stated as follows:

> The committee is very dissatisfied with the past record of the Secretary of the Treasury in assessing duties on entries subject to a dumping finding. Unless dumping duties are assessed in a timely fashion, the remedial effect of the law is negated * * *
>
> * * * * * * *
>
> The bill does not contain a provision specifically related to the collection of antidumping duties following an assessment. The Committee expects that its clear intent to expedite the entire antidumping proceedings should be carried out with respect to collection, since to do otherwise would negate the effect of the statute. In this connection, the Committee intends that the Authority shall act vigorously to collect dumping duties, using all means at its disposal to ensure timely collection. The Committee expects the Authority to devote sufficient resources to the collection process to ensure expeditio[u]s payment of antidumping duties.
>
> H. Rept. 96-317, 96th Cong., 1st sess. 69, 70, 71 (1979).

These sentiments were echoed in the report of the Senate Finance Committee which stated as follows:

> * * * [T]he committee intends that antidumping duties be collected expeditiously. This will reduce the uncertainty which prevails during suspension of liquidation for both the importer and the domestic industry. In light of the dismal performance of the Department of the Treasury in assessing special dumping duties in the recent past, the committee considers this time limit on assessment to be an extremely important addition to the law.
>
> S. Rept. 96-249, 96th Cong., 1st sess. 76, 77 (1979).

All this points to the final order as a ministerial act which must be accurately and promptly performed so that the assessment of duties may be accomplished.

The modicum of authority given to Commerce in 19 U.S.C. 1673(a)(2) to describe the class or kind of merchandise to which the order applies "* * * in such detail as [it] deems necessary * * *" does not permit alteration of the determinations. In practice, what Commerce deems necessary should not be less detailed than the determinations themselves, particularly where the possibility of confusion exists.

[16] As a ministerial act, the failure of the final order to effectuate a determination adverse to plaintiff, if that was the case, was of no moment. If however, the final order was subjected to the standards required of final administrative decisions it would probably be invalid as lacking the necessary clarity. Cf. *ABC Air Freight Co.* v. *Civil Aeronautics Board*, 301 F. 2d 295 (CA2 1968); *Burlington Truck Lines* v. *United States*, 371 U.S. 156 (1962).

modify the facts or legal conclusions on which those determinations depended.

This analysis is supported by the express terms of the statute, which begins in 19 U.S.C. 1673 with an unambiguous statement that the class or kind of merchandise found to have been sold at less than its fair value and to have materially injured a domestic industry must be subjected to an antidumping duty.[17]

Each stage of the statutory proceeding maintains the scope passed on from the previous stage. Thus, the class or kind of merchandise described in the petition, which becomes the subject of investigation under 19 U.S.C. 1673a(c) (2), is the subject of the preliminary injury determination of 19 U.S.C. 1673b, the suspension of liquidation under 19 U.S.C. 1673 b(d), the possible terminations or suspensions of 19 U.S.C. 1673c, and the final determinations of 19 U.S.C. 1673d.

In those administrative proceedings even if plaintiff believed itself to be an "orange" among "apples", so long as the Department of Commerce and the ITC were considering it to belong to a certain class it remained so for the purpose of the proceedings.[18] The Court has no doubt that the Royal Administrator was included in the administrative investigations from their commencement until their conclusion in final determinations.

Following the specific ITC injury determination the only legal significance of the final antidumping duty order for plaintiff was as a

---

[17] § *1673. Imposition of antidumping duties*

If—

(1) the administering authority determines that a class or kind of foreign merchandise is being, or is likely to be, sold in the United States at less than its fair value, and

(2) the Commission determines that—

(A) an industry in the United States—

(i) is materially injured, or

(ii) is threatened with material injury, or

(B) the establishment of an industry in the United States is materially retarded,

by reason of imports of that merchandise, then there shall be imposed upon such merchandise an antidumping duty, in addition to any other duty imposed, in an amount equal to the amount by which the foreign market value exceeds the United States price for the merchandise.

[18] The court distinguishes between the authority of the Customs Service to classify according to tariff classifications (19 U.S.C. § 1500) and the power of the agencies administering the antidumping law to determine a class or kind of merchandise. The determinations under the antidumping law may properly result in the creation of classes which do not correspond to classifications found in the tariff schedules or may define or modify a known classification in a manner not contemplated or desired by the Customs Service. Within the context of an antidumping proceeding the administering agency, at the proper time, can define the class in its terms.

The Customs Service is placed in a ministerial role by the antidumping law. See, 19 U.S.C. 1673a(a) and 1673h. See also, Reorganization Plan No. 3 of 1979; Report of the Senate Governmental Affairs Committee to accompany S. Res. 245, 96th Cong., 1st sess. 23, 39 (1979). Accordingly, it may not independently modify, directly or indirectly the determinations, their underlying facts, or their enforcement.

The court does not comment on the possibility of Commerce delegating a role to the Customs Service at a time when, and to the extent that, prior to a determination, the class or kind can properly be altered. See generally, *Armstrong Bros. Tool Co. v. United States*, 84 Cust. Ct——.C.D. 4843 (1980). After the final determination however, no agencies may review a determination or its underlying facts without specific statutory authority, let alone make modifications. The very strict controls on administrative review of prior determinations, found in 19 U.S.C. 1675(b), are another good indication that Congress did not want these determinations to remain in a state of flux.

signal that the time to bring an action for judicial review of the less than fair value and injury determinations was beginning to run. At that point the aggrievement had occurred by reason of the inclusion of plaintiff's product in the final determinations, the final order could not do less than effectuate the final determinations,[19] and the statutory remedy was available to contest any factual findings or legal conclusions underlying the determinations. 19 U.S.C. 1516a.

Careful examination of 19 U.S.C. § 1516a(2)[20] discloses that, when unrelated material is removed and language inserted in the place of relevant alphabetical references the statute would read as follows:

> Within thirty days after the date of publication in the Federal Register of—
>
> (ii) an antidumping * * * duty order based upon [final affirmative *determinations* by the Department of Commerce that merchandise which was the subject of the investigation is being sold at less than its fair value or by the International Trade Commission that the merchandise is causing material injury to an industry in the United States]
>
> an interested party * * * may commence an action in the Court of International Trade * * * *contesting any factual findings or legal conclusions upon which the determination is based.* [Italic supplied.]

It is plain that the action is directed at the basis of the final determinations and not at the final order. In view of the fact that plaintiff's actual agrievement was inclusion in the final determinations, it should have brought an action under 19 U.S.C. 1516a(2). It follows that a later administrative action, if taken in conformity with those final determinations, could not represent a new aggrievement of plaintiff. Thus, if the Department of Commerce now wishes to clarify and perfect the final order to dispel the confusion which has arisen, it may do so.

---

[19] Indeed if by some chance the consequences of the less than fair value and injury determinations were not enforced, it would be the petitioner (Intervenor) who would have a traditional mandamus action to compel the appropriate official to perform ministerial acts.

[20] *§1516a. Judicial review in countervailing duty and antidumping duty proceedings*

(a) REVIEW OF DETERMINATION.—

* * * * * * *

(2) REVIEW OF DETERMINATIONS ON RECORD.—

(A) IN GENERAL.—Within thirty days after the date of publication in the Federal Register of—

(ii) an antidumping or countervailing duty order based upon any determination described in clause (i) of subparagraph (B),

an interested party who is a party to the proceeding in connection with which the matter arises may commence an action in the United States Customs Court by filing a summons, and within thirty days thereafter a complaint, each with the content and in the form, manner, and style prescribed by the rules of that court, contesting any factual findings or legal conclusions upon which the determination is based.

(B) REVIEWABLE DETERMINATIONS.—The determinations which may be contested under subparagraph (A) are as follows:

(i) Final affirmative determinations by the Secretary and by the Commission under section 1303 of this title, or by the administering authority and by the Commission under Section 1671d or 1673d of this title.

The analysis of the facts and law requires the Court to dismiss plaintiff's action for lack of jurisdiction, the time within which to bring its action having expired 30 days after publication of the antidumping duty order.

The court notes that the dismissal is not grounded on the basis urged by the defendant, i.e., that the action under 19 U.S.C. 1516a is the exclusive remedy for all grievances arising from the administration of the antidumping law. For this grievance the action under 19 U.S.C. 1516a was an adequate remedy. However, it is not difficult to foresee that certain grievances may arise between the final determinations and the administrative review of the final determinations, under 19 U.S.C. 1675 for which 19 U.S.C. 1516a would be manifestly inadequate. In those instances, the right of action under 5 U.S.C. 702 and the Court's broad residual jurisdiction under 28 U.S.C. 1581(i) will serve to maintain the comprehensive system of judicial review established by the legislature.

For the reasons expressed above, this action is hereby dismissed for lack of jurisdiction.

(Slip Op. 80–17)

SMITH-CORONA GROUP, CONSUMER PRODUCTS DIVISION, SCM CORPORATION, PLAINTIFF *v.* UNITED STATES, DEFENDANT; AND BROTHER INDUSTRIES, LTD., AND BROTHER INTERNATIONAL CORPORATION, AND SILVER REED AMERICA, INC., AND SILVER SEIKO, LTD., PARTIES-IN-INTEREST

Memorandum and Order on Plaintiff's Motion for Injunctive and Incidental Relief, and Party-in-Interest's Cross-Motion to Dismiss.

Court No. 80–9–01343

[Injunctive relief granted; incidental relief denied; cross-motion to dismiss denied.]

(Dated December 30, 1980)

Eugene L. Stewart and *Terence P. Stewart*, Esqs., for the plaintiff.

Alice Daniel, Assistant Attorney General (*David M. Cohen*, Director, Commercial Litigation Branch, and *Velta A. Melnbrencis*, Assistant Branch Director, Esqs.), for the defendant.

Tanaka Walders & Ritger, Esqs. (*H. William Tanaka*, *Donald L. E. Ritger* and *Wesley K. Caine*, Esqs., of counsel) for Brother Industries, Ltd., and Brother International Corp., party-in-interest.

Arter, Hadden & Hemmendinger, Esqs. (*William Barringer* and *Christopher Dunn*, Esqs., of counsel) for Silver Reed America, Inc., and Silver Seiko, Ltd., party-in-interest.

NEWMAN, Judge: Plaintiff, a well known domestic manufacturer of portable electric typewriters (PET's), seeks judicial review of an

"Early Determination of Antidumping Duties" by the International Trade Administration, U.S. Department of Commerce (Commerce), published in the Federal Register on August 13, 1980 (45 F.R. 53853–56). This determination, made pursuant to section 736(c) of the Tariff Act of 1930, as amended by the Trade Agreements Act of 1979 (Public Law 96–39, 93 Stat. 144) (19 U.S.C. 1673e(c)), concerns certain PET's from Japan manufactured and imported by the parties-in-interest, Brother and Silver, and entered, or withdrawn from warehouse, for consumption on or after January 4, 1980 to May 7, 1980.[1] Plaintiff predicates subject matter jurisdiction on section 516A(a)(2)(A) and (B)(iii) of the Tariff Act of 1930, as amended by the Trade Agreements Act of 1979 (19 U.S.C. 1516a(a)(2)(A) and (B)(iii)), raising an issue of novel impression. Under the recently enacted Customs Courts Act of 1980, Public Law 96–417, 94 Stat. 1727, effective November 1, 1980, the Court of International Trade has exclusive jurisdiction of any civil action commenced under section 516A of the Tariff Act of 1930. 28 U.S.C. 1581(c).

Presently before the court is plaintiff's application under section 516A(c)(2) of the Tariff Act of 1930, as amended by the Trade Agreements Act of 1979 (19 U.S.C. 1516a(c)(2)), to enjoin the liquidation of the entries that were the subject of Commerce's early determination of antidumping duties pending the final hearing and disposition on the merits of the action. Additionally, plaintiff requests certain incidental relief, which will be discussed infra.

Brother has filed a cross-motion to dismiss for lack of subject matter jurisdiction, which cross-motion is opposed by plaintiff and the Government. Silver does not challenge the court's jurisdiction (Trans. Oral Arg., 71).[2]

Background

On May 9, 1980 Commerce published an Antidumping Duty Order covering imports of PET's from Japan. 45 F.R. 30618–19.[3] The order provided that all entries of PET's imported from Japan subject to the "Withholding of Appraisement" notice published on January 4, 1980 were liable for possible assessment of antidumping duties. Further, the order directed Customs officers to require a deposit of estimated antidumping duties pending liquidation of entries in the follow-

[1] January 4, 1980 was the date of publication by the Treasury Department of its tentative determination of sales at less than fair value, and the date on which liquidation was suspended (44 F.R. 1220); May 7, 1980 was the date of publication by the International Trade Commission of its affirmative final injury determination (45 F.R. 30188).

[2] On October 14, 1980, oral argument was heard on plaintiff's requested injunctive and incidental relief, and Brother's cross-motion to dismiss.

[3] That antidumping duty order is sub judice in *Nakajima All Co., Ltd.* v. *United States*, Court No. 80-6-00933; and in *Silver Reed America, Inc., et al.* v. *United States*, Court No. 80-6-00934. Plaintiff, SCM, is a party intervenor in both actions.

ing amounts: 36.53 percent ad valorem for Silver, and 48.70 percent ad valorem for Brother.

In lieu of the deposit of estimated antidumping duties, Commerce may permit the posting of a bond or other security for a period not to exceed 90 days from the date of publication of an antidumping duty order. This alternative is available where Commerce is satisfied, based on information presented to it by a manufacturer, producer, or exporter, that it will be able to determine within 90 days of publication date of the order the foreign market value and the U.S. price for all merchandise of such manufacturer, producer, or exporter that was entered, or withdrawn from warehouse, for consumption between the date of publication of the affirmative preliminary less than fair value (LTFV) determination and the date of publication of the International Trade Commission's affirmative final determination. 19 U.S.C. 1673e(c)(1).

The results of Commerce's determination of foreign market value and U.S. price serve as the basis for the assessment of antidumping duties on all entries of the merchandise covered by the determination, viz., entries that were made between publication date of the affirmative preliminary LTFV determination and publication date of the affirmative final injury determination. The results also serve as the basis for the deposit of estimated antidumping duties on future entries of merchandise from the particular foreign interested party. 19 U.S.C. 1673e(c)(3).

In a notice published in the Federal Register on May 30, 1980 Commerce stated that Brother and Silver had requested that the deposit of estimated antidumping duties provided for in the Antidumping Duty Order be waived, and that an early determination of antidumping duties be made. Commerce advised that it was satisfied from the information presented by these two Japanese manufacturers that it would be able to timely make the requisite determination for all entries of merchandise of such manufacturers. 45 F.R. 36464. Commerce further stated (ibid.):

> Accordingly, Customs officers are being directed to waive deposit of estimated duty and accept the posting of a bond or other security for all entries of portable electric typewriters manufactured by Brother Industries and Silver Seiko entered or withdrawn from warehouse, for consumption, from the date of publication of this notice.

The results of the early determination of antidumping duties respecting PET's from Japan manufactured by Brother Industries and Silver Seiko were published in the Federal Register on August 13, 1980. In its notice, Commerce explained the manner of computing the foreign market value and the U.S. price of all entries of the subject merchandise made from January 4, 1980, to May 7, 1980. The results

of the comparisons of foreign market value and the U.S. price were summarized as follows (45 F.R. 53855):

> Margins were found on 74 percent of sales compared. The weighted average margin found with respect to sales by Silver Seiko was 14.91 percent and with respect to sales by Brother was 5.31 percent.

Accordingly, Commerce determined that the U.S. price of Brother and Silver PET's are less than the foreign market values of such or similar typewriters, (ibid.) and then advised:

> Customs officials will be directed to assess antidumping duties equal to the amount determined by the Department during this proceeding for all entries of portable electric typewriters manufactured by Brother and Silver Seiko entered or withdrawn from warehouse for consumption on or after January 4, 1980 to May 7, 1980. (Ibid.)

Additionally, it was announced that Customs officers were being directed to require the deposit of estimated antidumping duties on all PET's from Japan entered or withdrawn from warehouse for consumption. In that connection, Commerce announced: (45 F.R. at 53856):

> The estimated antidumping duty deposit required for entries of the subject merchandise shall be 14.91 percent for Silver Seiko; 5.31 percent for Brother; * * *

Significantly too, the notice of August 13, 1980 stated Commerce's intent that, for purposes of the assessment of antidumping duties on the entries subject to the determination under section 736, the determination constitutes the completion of a review under section 751 of the act which vests in all interested parties the rights flowing from the completion of such a review.

In this action, plaintiff challenges Commerce's allowance of certain adjustments to the foreign market values for Brother's and Silver's PET's, which adjustments were made for the purpose of comparing either the purchase price or the exporter's sales prices, as appropriate' with the foreign market values and thereby arriving at the proper antidumping duties to be assessed. The contested adjustments include, inter alia: (a) allowances for differences in Japanese inland freight; (b) allowances for differences in merchandise; and (c) allowances for differences in circumstances of sale, including expenses for packing, rebates, and advertising and the so-called exporter's sales price offset.

The purpose of plaintiff's application is to enjoin the liquidation of entries made on or after January 4, 1980 to May 7, 1980, so that such entries may be assessed with antidumping duties in the proper amounts, as determined by this court. Moreover, plaintiff seeks an order requiring the deposit by Brother and Silver of estimated antidumping duties in accordance with the terms of the antidumping

duty order, respecting all entries, or withdrawals, of the subject merchandise made since January 4, 1980, pending liquidation in conformance with the final decision of this court.

JURISDICTION

We first consider the threshold jurisdictional issue raised by Brother's cross-motion to dismiss—an issue of first impression.

The nub of Brother's challenge to the court's jurisdiction is that this action seeks review of a determination made under section 736(c) of the Tariff Act, and that under section 516A judicial review is not provided with respect to a section 736(c) determination.[4]

In their opposition to Brother's cross-motion, plaintiff and the Government argue that while section 516A does not specifically list determinations made pursuant to section 736 of the act among those reviewable, an examination of the statutory scheme in its entirety, pertinent legislative history, and the contested determination itself, demonstrate that the court has jurisdiction over this action.[5]

For the reasons advanced by plaintiff and the Government, I have concluded that Brother's jurisdictional challenge is without merit.

Brother's cross-motion to dismiss for lack of subject matter jurisdiction has raised a novel issue, viz., whether the court has jurisdiction under section 516A to review an antidumping duty assessment determination made by Commerce prior to the annual review determination required by section 751(a) of the Tariff Act of 1930, as added by the Trade Agreements Act of 1979. In light of the anticipated extensive use of section 736(c) in antidumping duty proceedings, the significance of the jurisdictional question cannot be overemphasized.

While there can be no doubt Congress intended that antidumping duty assessment determinations may be reviewable by this Court, admittedly section 516A does not expressly mention section 736 determinations among those set forth as reviewable. Nonetheless, from the legislative history of the Trade Agreements Act of 1979, it is evident that section 736(c) simply authorizes a fast-track section 751(a) review and determination, and therefore an early determination

---

[4] Inasmuch as this action was filed and briefs submitted prior to November 1, 1980, effective date of the Customs Courts Act of 1980, the parties have not addressed the question of whether the court's residual jurisdiction under 28 U.S.C. 1581(i) would be applicable in the event that the court should find that the instant action does not fall within the purview of section 516A. See H. Rept. 96-1235, 96th Cong., 1st Sess. 48 (1980); *Royal Business Machines, Inc.* v. *United States, et al.*, 1 CIT ——, Slip-Op. 80-16 (1980). In view of the conclusions reached in this opinion, it is unnecessary to consider that issue.

[5] Interestingly, Brother itself has filed an action challenging Commerce's early determination of August 13, 1980 (Court No. 80-9-01436), but counsel for Brother has characterized that action as "essentially protective in nature, and will be pursued only if this Court * * * finds [that it has] jurisdiction". (Brother's memorandum, at 7, footnote 2.)

Contemporaneously with this application and order, I have granted Brother's application for consolidation of the instant action with Court No. 80-9-01436.

of antidumping duties pursuant to section 736(c) is reviewable as a section 751(a) determination.

Congressional intent that an early determination of antidumping duties made under section 736(c) should be also considered as a determination under section 751, is demonstrated by the reports of both committees that were instrumental in drafting the Trade Agreements Act of 1979.

Thus, the "House Ways and Means Committee Report No. 96–317," 96th Cong., 1st sess. (1979) states (page 70):

> Further, the bill provides a limited exception to the requirement of a deposit of estimated duties for importers who have taken steps to eliminate or substantially reduce dumping margins between the date of an affirmative preliminary determination by the Authority and the final affirmative determination by the ITC. Thus, for a three-month period following the issuance of an antidumping order, the Authority may continue to permit entry of merchandise subject to the order under bond for individual importers if it has reason to believe that those importers have taken steps to revise their prices to result in a significantly lower dumping margin. *During this three-month period, the Authority will examine the merchandise entered during the period between its preliminary and the ITC's final determination. If assessment on these entries can be made within the three-month period in accordance with the procedures of section 751, then assessment will take place and the new dumping margins derived from this assessment will serve as the basis for the deposit of estimated duties on future entries.* [Italic added].

Similarly, the "Senate Finance Committee Report No. 96–249," 96th Cong., 1st sess. (1979), commented (p. 75):

> Generally, estimated duty deposits equal to the amount of the estimated antidumping duty would be required to be deposited at the same time as estimated normal customs duty deposits must be made with respect to the merchandise under section 505(a) of the Tariff Act of 1930 (19 U.S.C. 1505). However, the administering authority could permit the importer to post a bond or other security in lieu of estimated antidumping duty deposits for not more than 90 calendar days after the date on which the antidumping duty order is published under certain conditions. *The manufacturer, producer, or exporter of the merchandise would be required to supply the authority sufficient information relating to entries of the merchandise made after the date of the preliminary determination by the authority and before the date of the final determination by the ITC to enable the authority to determine the amount of antidumping duties on that merchandise under section 751(a) of the Tariff Act. If the authority permits the posting of bonds or other security in lieu of estimated duty deposits and makes a determination under section 751, then that determination would be the basis for the assessment of antidumping duties imposed on entries made before the date of the affirmative determination of the ITC.* That determination would also be the basis for the deposit of estimated anti-

> dumping duties on entries of merchandise by the manufacturer, producer, or exporter who supplies the information, made on or after the earlier of the date on which the determination is made under section 751(a) or the 90th day after the date on which the antidumping duty order is published. [Italic added.]

While the principle respecting the strict construction of statutes waiving the sovereign immunity of the United States is well settled,[6] the plain indication of Congressional intent concerning the interplay of section 736(c) and 751(a) cannot be ignored. *Cf. SCM Corporation* v. *United States, Brother International Corp., Party-in-interest*, 80 Cust. Ct. 226, C.R.D. 78–2, 450 F. Supp. 1178 (1978) (Court's jurisdiction to review negative injury determinations in antidumping proceedings gleaned from Congressional intent).

In this case, based upon the information submitted by Brother and Silver pursuant to section 736(c), Commerce first found that it could make an early antidumping duty determination within 90 days after the publication of the antidumping duty order of May 9, 1980. Consequently, on May 30, 1980 Commerce permitted Brother and Silver to post bonds or other security in lieu of estimated dumping duties for merchandise entered, or withdrawn from warehouse, for consumption on or after May 30 and before August 8, 1980. 45 F.R. 36464. Subsequently, Commerce proceeded to determine the foreign market values and United States prices for the merchandise involved. On August 13, 1980 Commerce published its early determination, which not only included a determination of the amount of estimated duties to be deposited regarding future entries, but also included the foreign market values and the United States prices for the merchandise involved, along with certain adjustments to permit their comparison. Plainly, then, Commerce had conducted a review and determination of antidumping duties as provided in section 751. Hence, Commerce correctly observed that its early determination under section 736(c) also constituted the completion of a review under section 751, and expressly so stated in its published determination. 45 F.R. 58355.

In sum, since Commerce made a section 751 determination for purposes of section 736(c)(2), and since section 751 is specifically reviewable pursuant to section 516A, the early antidumping duty determination in this case is reviewable by this court pursuant to section 516A.

Brother's memorandum notes the above cited legislative history, but maintains that it should not be used to create ambiguity in sections 736(c) and 751, which provisions according to Brother are clear on their face, and consist of distinct provisions of law, each section

---

[6] See *United States* v. *Boe*, 64 CCPA 11, C.A.D. 1177, 543 F. 2d 151 (1976).

being self-contained and serving its own purpose. Continuing, Brother points out that the introductory language of section 751(a) directs the administering authority to review and determine the amount of any antidumping duty "[a]t least once during each 12-month period *beginning on the anniversary of the date of publication of * * * an antidumping duty order.*" (Italic added.) From this language Brother concludes that by its terms, section 751(a) reviews comprise only those which are initiated after the anniversary date of an antidumping order so that an early antidumping duty determination cannot qualify as a section 751 determination. I am unable to agree with such narrow construction of the statute.

The introductory language in section 751(a) merely mandates the administering authority to make a review and determination of antidumping duties once every 12 months following the anniversary date of the antidumping duty order. It does not preclude the Department from making a section 751 determination at an earlier date. That a section 751 determination, such as made here, could be made during the 90-day period following the publication of the antidumping duty order, as may be noted above, is clearly reflected in legislative history.

Admittedly, on a cursory reading of the statutes the relationship between sections 736 and 751 is not immediately apparent. Nonetheless, upon careful analysis it becomes apparent that section 736(c) is not an independent, self-contained provision, as insisted by Brother, but rather section 736(c) depends for its effectiveness upon section 751(a). Consequently, Congress did not provide for judicial review of section 736(c) determinations for the simple reason that the significant determinations are all made in accordance with section 751(a) procedures, explicitly reviewable under section 516A. Accordingly, the cross-motion by Brother to dismiss this action for lack of subject matter jurisdiction is denied.

Injunction

We turn to plaintiff's application for injunctive relief pursuant to 19 U.S.C. 1516a(c)(2).

In subsection (c)(1) of section 516A, 19 U.S.C. 1516a(c)(1), Congress provided that unless liquidation is enjoined by the court, entries of merchandise of the character covered by a determination contested under subsection (a) of section 516A shall be liquidated in accordance with the administrative determination, if they are entered, or withdrawn from warehouse, for consumption on or before the date of publication in the Federal Register of a notice of a decision of the Customs court (renamed U.S. Court of International Trade, effective November 1, 1980), or of the Court of Customs and Patent Appeals, not in harmony with that determination.

In subsection (c)(2) of section 516A, 19 U.S.C. 1516a(c)(2), Congress permitted the Customs court to enjoin the liquidation of some or all entries of merchandise covered by a determination upon a request by an interested party for such relief and a proper showing that the requested relief should be granted under the circumstances. Under the statute, in ruling on a request for injunctive relief the court must consider, among other factors, whether:

(A) the party filing the action is likely to prevail on the merits,

(B) the party filing the action would be irreparably harmed if liquidation of some or all of the entries is not enjoined,

(C) the public interest would best be served if liquidation is enjoined, and

(D) the harm to the party filing the action would be greater if liquidation of some or all of the entries is not enjoined than the harm to other persons if liquidation of some or all of the entries is enjoined.

The foregoing statutory factors have long been recognized by federal courts in granting preliminary injunctive relief. See, *e.g.*, *Virginia Petroleum Jobbers Association* v. *F.P.C.*, 259 F. 2d 921, 925 (D.C. Cir. 1958). See also *Zenith Radio Corporation* v. *United States*, 1 CIT —, Slip Op. 80–10 (1980); and *De Jub Leasing Corp., et al.* v. *United States, et al.*, 1 CIT —, Slip Op. 80–9 (1980).

The entries subject to liquidation with assessment of antidumping duties based upon the early determination published on August 13, 1980, which plaintiff contests in this action, are the entries of PETs manufactured by Brother Industries and Silver Seiko and entered, or withdrawn from warehouse, for consumption from January 4, 1980 to May 7, 1980.

I have carefully considered, among other things, the four factors delineated in the statute, and have concluded that under the facts and circumstances presented herein injunctive relief is warranted respecting the above-mentioned entries.

Plaintiff claims on the merits that Commerce improperly allowed certain adjustments (noted supra) to be made to the homemarket price of each model typewriter such as or similar to an imported model, for the purpose of computing statutory foreign market value. The result of any improper adjustment, of course, would reduce the foreign market value, and thereby diminish the difference between such value and the U.S. price of the imported articles, viz., reduce or eliminate the dumping margin. H.R. Rept. 96–317, 96th Cong., 1st sess. 76 (1979). The merits present a number of highly complex issues which have been but briefly argued by the parties in their memoranda of law submitted to the court in connection with plaintiff's present application. While I have not arrived at a final decision as to the propriety of any or all of the contested adjustments, at

this juncture I have concluded from the arguments presented that plaintiff is likely to prevail on the merits.

Additionally, I find that plaintiff would suffer irreparable harm if liquidation of the entries covered by the early antidumping determination were not enjoined. It appears that in 1980 plaintiff has continued to experience substantial adverse operating results in its PET business, at least partly due to the less than fair value sales by the Japanese manufacturers. To buttress its argument that injunctive relief is necessary to prevent irreparable harm to its PET business plaintiff cites statistics showing that increased imports of PET's from Japan in 1980 over 1979 have captured an additional share of the market this year at the expense of plaintiff. Moreover, plaintiff's statistics demonstrate that plaintiff continues to suffer a decline in: Operating income, return on net sales, production, and U.S. sales. Plaintiff has also shown that its inventories of U.S. produced PET's have substantially increased, and that there has been a continuation of price suppression.

It further appears from an affidavit executed by plaintiff's vice president and general manager that substantial numbers of Japanese made PET's imported earlier this year remain in inventory. Liquidation of the subject entries prior to the final decision in this case would allow any inventoried units to escape the imposition of the correct amount of antidumping duties if plaintiff prevailed on any of the contested adjustments to the foreign market value.

Generally, the public interest is best served by preventing entries subject to assessment of antidumping duties from escaping the correct amount of such duties. This public interest result may be achieved by the procedural safeguard of an injunction pendente lite to maintain the status quo of the unliquidated entries until a final resolution of the merits.

The parties-in-interest argue that granting injunctive relief to plaintiff would restrict competition and enhance plaintiff's potential monopoly position in the PET business. While Brother notes that in 1975 the Antitrust Division of the Department of Justice opposed plaintiff's antidumping petition on antitrust grounds, nevertheless I have also noted with great interest that presently there is not even a suggestion by the Government in its opposition to plaintiff's application that there may be any monopoly or antitrust implication if liquidations are enjoined. Further, Silver's claim that granting injunctive relief would result in higher consumer prices for PET's is purely conjectural.

Finally, I find that any harm to the parties-in-interest that would result from enjoining liquidations (e.g., pricing uncertainty) is substantially outweighed by the harm that would result to plaintiff

if injunctive relief were denied. The existence of the present litigation, as well as the litigation brought by Brother and Silver, make it impossible at this stage to fix with certainty the amount of antidumping duties that may eventually be assessed on merchandise entered after May 7, 1980. Consequently, the cost and pricing uncertainties experienced by the parties-in-interest will continue whether or not this court enjoins the liquidation of entries made before May 7, 1980.

While the court is mindful that Congress intended injunctive relief under section 516A(c) (2) should be regarded as "truly an extraordinary measure and that the relief should not be granted in the ordinary course of events" (S. Rept. 96–249, at 253), under all the facts and circumstances, I find that the requested injunctive relief has been fully justified, notwithstanding the commercial uncertainty relating to the suspension of liquidation. In short, if plaintiff should prevail on the merits, liquidation of the involved entries on the basis of the August 13, 1980 determination would further compound the injury to plaintiff resulting from the less than fair value sales of the Japanese PET's, and such injury would be irreparable.

Incidental Relief

Last, we come to plaintiff's request for certain incidental relief. Specifically, plaintiff requests this Court to direct that there be collected a deposit of estimated antidumping duties on all PETs' manufactured by Brother Industries and Silver Seiko entered, or withdrawn from warehouse, for consumption on and after January 4, 1980, in the amount of 48.70 percent ad valorem for Brother and 36.53 percent ad valorem for Silver, as specified in the antidumping duty order issued on May 9, 1980.

I agree with Silver's contention that the court lacks authority to direct the deposit of estimated duties in an amount other than ordered by Commerce in the contested determination of August 13, 1980 until after there has been a full review of the merits; and that there should not be any modification of the amount of such deposits as incidental to granting an injunction pendente lite.

To suspend Commerce's determination of August 13, 1980 and order the deposit of estimated duties in the amounts set forth in the Antidumping Duty Order published on May 9, 1980 would, in effect, prejudge the merits of the instant case at this early stage as part of the expedited procedures accompanying an application for a preliminary injunction. What is more, if this court were to require deposits of estimated duties in amounts that are different than those prescribed by the contested determination, the court would effectively be destroying the status quo, which is one of the fundamental purposes of

granting injunctive relief pendente lite. *Cf. Industrial Fasteners Group, American Importers Association* v. *United States*, 85 Cust. Ct. ——, C.R.D. 80–8, 495 F. Supp. 911 (1980); See also S. Rept. 96–249, 96th Cong., 1st sess. 252–253 (1979).

Silver also points out that the rates which plaintiff now seeks as a basis for deposits of estimated duties (viz., those determined in the antidumping order of May 9, 1980) are predicated upon the same categories of adjustments now challenged by plaintiff; and that if plaintiff's claims are sustained on the merits, then the rates now sought would be as unlawful as the rates now challenged.

Finally, Brother calls attention to the fact, undisputed by plaintiff, that the dumping margins determined by Commerce in the original antidumping duty order were based upon exchange rates for the U.S. dollar and the Japanese yen that are no longer applicable.[7]

For the foregoing reasons, plaintiff's requested incidental relief is denied.

Summed up, then, the history of this complex litigation to date is as follows: On April 9, 1979 plaintiff filed a petition with the Treasury Department regarding PET's from Japan pursuant to the Antidumping Act of 1921, as amended (19 U.S.C. 160, et seq.), and identified three Japanese manufacturers of PET's, including the parties-in-interest Brother and Silver. An antidumping proceeding notice was published on May 18, 1979, and a notice of extension of the investigatory period was published on November 15, 1979. Thereafter a withholding of appraisement notice was published on January 4, 1980. According to that notice, Treasury had made a tentative determination of less than fair value (LTFV) sales of PET's from Japan. On January 1, 1980, the Trade Agreements Act of 1979 had become effective. In accordance with section 102(b)(2) of that act, Treasury's tentative determination under the Antidumping Act was treated as a preliminary determination under the new section 733(b) of the Tariff Act of 1930. Pursuant to section 735(a) of the Tariff Act, the administering authority (viz., Commerce) made a final determination, published on March 21, 1980, that PET's from Japan are being sold at LTFV. The Commission, in turn, instituted antidumping investigation No. 731–TA–12 (final) pursuant to section 735 of the Tariff Act of 1930, as added by the Trade Agreements Act of 1979, to determine whether an industry in the United States is materially injured or is threatened with material injury, or the establishment of an industry in the United States is materially retarded by reason of the LTFV imports from Japan.

---

[7] The exchange rates applied in the original order related to the period of investigation into alleged sales at less than fair value, viz., November 1978 through April 1979.

The Commission's Final Determination of Material Injury was published on May 7, 1980, and on May 9, 1980, Commerce published an antidumping duty order respecting PET's from Japan, specifying inter alia, that deposits for estimated antidumping duties would be collected in the following amounts: Silver Seiko, 36.53 percent ad valorem; and Brother Industries, 48.70 percent ad valorem. In May 1980, Brother Industries and Silver Seiko requested that they be permitted to deposit bond or other security in lieu of estimated duties pursuant to section 736(c) of the Tariff Act of 1930. Having satisfied itself that it could make an early determination of the foreign market value and the U.S. price for the merchandise which was entered between January 4, 1980 and May 7, 1980, Commerce waived the deposit of estimated duty in lieu of security pending the early determination. On August 7, 1980, Commerce made its early determination of antidumping duties respecting PET's from Japan, which was published on August 13, 1980. In its early determination, Commerce specified the amount of the deposit of estimated antidumping duties for future entries, viz., 14.91 percent ad valorem for Silver Seiko, and 5.3 percent ad valorem for Brother Industries. Further, Commerce directed that Customs officials should assess antidumping duties equal to the amount determined during the proceeding for all entries of PET's manufactured by Brother Industries and Silver Seiko entered, or withdrawn from warehouse, for consumption on or after January 4, 1980 to May 7, 1980. On September 2, 1980, plaintiff filed a summons in this action contesting the determination of antidumping duty published on August 13, 1980, along with a complaint. The complaint, in substance, challenges various adjustments made by Commerce to the foreign market value of the typewriters. On September 12, 1980, plaintiff filed its application under section 516A(c)(2) of the Tariff Act of 1930, as amended by the Trade Agreements Act of 1979, to enjoin the liquidation of the entries that were the subject of Commerce's early determination of antidumping duties pending the disposition of the merits of the action and for specified incidental relief. As noted herein, the application for injunctive relief is granted; but plaintiff's application for incidental relief is denied.

Accordingly, it is hereby ORDERED:

1. That plaintiff's motion to enjoin the liquidation of entries of portable electric typewriters from Japan on and after January 4, 1980 to May 7, 1980, covered by the early determination of antidumping duties by the International Trade Administration, United States Department of Commerce, published in the Federal Register on August 13, 1980 (45 F.R. 53853–56) is granted.

2. That plaintiff's application for incidental relief is denied.

3. That the cross-motion to dismiss by Brother Industries, Ltd. and Brother International Corporation is denied.

(Slip Op. 80–18)

BROTHER INDUSTRIES, LTD., AND BROTHER INTERNATIONAL CORPORATION, PLAINTIFFS *v.* UNITED STATES, DEFENDANT; SMITH-CORONA GROUP, CONSUMER PRODUCTS DIVISION, SCM CORPORATION, PARTY-IN-INTEREST

Court No. 80–9–01436

SMITH-CORONA GROUP, CONSUMER PRODUCTS DIVISION, SCM CORPORATION, PLAINTIFF *v.* UNITED STATES, DEFENDANT, BROTHER INDUSTRIES, LTD., AND BROTHER INTERNATIONAL CORPORATION; SILVER SEIKO, LTD., AND SILVER REED AMERICA, INC., PARTIES-IN-INTEREST

Court No. 80–9–01343

Memorandum and Order on Motions for Consolidation and Severance

[Motion for consolidation granted; Motion for severance denied.]

(Dated: December 30, 1980)

Alice Daniel, Assistant Attorney General (*David M. Cohen*, Director, Commercial Litigation Branch, and *Velta A. Melnbrencis*, Assistant Branch Director, Esqs.), for the defendant.

Tanaka Walders & Ritger, Esqs. (*H. William Tanaka, Donald L. E. Ritger* and *Wesley K. Caine*, Esqs., of counsel) for Brother Industries, Ltd., and Brother International Corporation, party-in-interest.

Arter, Hadden & Hemmendinger, Esqs. (*William Barringer* and *Christopher Dunn*, Esqs., of counsel) for Silver Seiko, Ltd., and Silver Reed America, Inc., party-in-interest.

NEWMAN, Judge: Brother Industries, Ltd. and Brother International Corp. (Brother) have moved to consolidate court No. 80–9–01343 (in which Brother appears as a party-in-interest) and court No. 80–9–01436 (in which Brother appears as plaintiff). Silver Seiko, Ltd. and Silver Reed America, Inc. (Silver) oppose consolidation and have cross-moved for severance of court No. 80–9–01343 with regard to Silver in the event this court grants Brother's motion. The Government consents to Brother's motion for consolidation and opposes Silver's cross-motion for severance. Smith-Corona Group, Consumer Products Division, SCM Corp. (SCM) has not responded to either of the pending motions.

For the reasons stated below, Brother's motion for consolidation is granted, and Silver's cross-motion for severance is denied.

Rule 42(a) of the Rules of this Court provides:

> (a) Consolidation. When actions involving a common question of law or fact are pending before the court, it may order a joint hearing or trial of any or all the matters in issue in the actions; it may order all the actions consolidated under a consolidated

complaint; and it may make such orders concerning proceedings therein as may tend to avoid unnecessary costs or delay.

In both of the above-captioned actions, plaintiffs challenge the "Early Determination of Antidumping Duties" reached by the International Trade Administration, U.S. Department of Commerce (Commerce) pursuant to section 736(c) of the Tariff Act of 1930, as added by the Trade Agreements Act of 1979 (Public Law 96-39, 93 Stat. 201) (19 U.S.C. 1673(c)) (45 F.R. 53853). The respective plaintiffs in both cases contend that Commerce erred as to various respects in calculating inter alia, the estimated antidumping duties to be deposited in connection with entries of certain portable electric typewriters imported from Japan during the same period of time. Thus, in both cases, the same administrative record and determination are the subjects of this court's review. The court cannot completely determine the correctness of the contested determination without resolving the questions raised in both cases concerning various adjustments to foreign market value, and it is clear that the two actions involve common questions of law or fact.

Silver's cross-motion for severance is without merit. As noted in the memoranda of law filed in connection with SCM's application for injunctive and incidental relief in court No. 80-9-01343, which application is decided contemporaneously with this motion and order,[1] the SCM action raises issues of law which are common to both Brother's and Silver's typewriters. Under these circumstances, it makes sense that the issues be briefed and decided in one consolidated case. Severing the action, as requested by Silver, would result in much needless duplication of effort on the part of SCM, the Government and the court, without commensurate benefit to Silver. While, of course, there may be proceedings in the consolidated case that do not directly affect Silver's interests, by the same token it would appear to be of benefit to Silver to know all that is brought to the attention of the court concerning the contested determination which Silver wishes to defend respecting its own typewriters. If there are any matters raised which do not affect Silver, it need not respond. In any event and most certainly, the court is convinced that consolidation is the practical solution for this maze of proceedings.

In essence—and despite the obvious complexity—consolidation of the two cases will promote judicial economy. The court will be concerned with only one administrative record in both actions; there will be no need to monitor extra motions, such as for extensions of time or for summary judgment, etc.; and consolidation will permit the court to

---

[1] *Smith-Corona Group, Consumer Products Division, SCM Corporation* v. *United States, et al.*, 1 CIT—— Slip Op. 80-17 (1980).

resolve all issues relating to the contested administrative determination in a single legal proceeding, albeit complicated.

For the foregoing reasons, it is hereby ORDERED:

1. That the motion for consolidation by Brother is granted; and
2. That the alternative motion for severance by Silver is denied.

(Slip Op. 80–19)

FARR MAN & CO., INC. AND THE NATIONAL SUGAR REFINING COMPANY, PLAINTIFFS *v.* UNITED STATES, DEFENDANT

Court No. 79–10–01490

Memorandum Opinion and Order on Plaintiffs' Motion for Three-Judge Panel

[Plaintiffs' motion granted.]

(Dated December 31, 1980)

Barnes, Richardson & Colburn (*Rufus E. Jarman, Jr.*, on the brief) for the plaintiffs.

Alice Daniel, Assistant Attorney General; *Joseph I. Liebman*, Attorney in Charge, International Trade Field Office, Commercial Litigation Branch (*Madeline B. Kuflik* on the brief), for the defendant.

RE, C.J.: Plaintiffs have brought this action to obtain a refund of import fees which they claim were improperly assessed pursuant to Presidential Proclamation No. 4547 of January 20, 1978, upon raw sugar cane imported from Argentina. Pursuant to the provisions of rule 4.13 of the Rules of the U.S. Customs Court,[1] plaintiffs, prior to notice of trial, moved for assignment of this action to a three-judge panel.

Plaintiffs contend that the four issues stated in their motion warrant consideration of this case by a three-judge panel. The defendant disagrees.

---

[1] *Rule 4.13 Application for Three-Judge Panel.*

Any party to an action may move, after issue has been joined but no later than 10 days after the filing of a notice of trial, for the designation by the chief judge of three judges of the court to hear and determine the action. Such motion shall be filed with the clerk of the court and referred to the chief judge. It shall state specifically the issue of the constitutionality of an act of Congress, a proclamation of the President or an Executive order, or the broad or significant implications in the administration or interpretation of the customs laws claimed to be involved, and shall otherwise conform to the requirements of Rule 4.12(b). The time to respond and the filing of briefs, memoranda, and affidavits shall be governed so far as applicable by rules 4.12(c) and (d).

Plaintiffs filed their motion prior to November 1, 1980 when the Customs Courts Act of 1980, Public Law 96–417, 94 Stat. 1727, became effective together with the Rules of the United States Court of International Trade.

Rule 77(d)(2), U.S. Court of International Trade, effective November 1, 1980:

Assignment to Three-Judge Panel. An action may be assigned by the chief judge to a three-judge panel either upon motion, or upon his own initiative, when the chief judge finds that the action raises an issue of the constitutionality of an Act of Congress, a proclamation of the President, or an Executive order; or has broad and significant implications in the administration or interpretation of the law.

The issues, as framed by the plaintiffs, are as follows:

I. Whether section 22 of the Agricultural Adjustment Act authorizes imposition of special import fees upon specified products from some, but not all countries entitled to most-favored-nation treatment?
II. Whether section 22 authorized discrimination among supplying countries under the facts of this case?
III. Whether imposition of import fees upon Argentine sugar without similar imposition upon sugar from all other countries violates the "most-favored-nation principal [*sic*]," and the statutes, treaties and trade agreements incorporating that principle?
IV. When does merchandise "enter the United States" for purposes of the effective date of a proclamation imposing duty?

The statutory basis for the plaintiffs' motion is found in 28 U.S.C. 255, as amended. Pursuant to the provisions of section 255, the chief judge shall designate a three-judge panel of the court to hear and determine any civil action which he finds:

> * * * (1) raises an issue of the constitutionality of an act of Congress, a proclamation of the President or an Executive order; or (2) has broad or significant implications in the administration or interpretation of the customs laws.

In this case the decision of the chief judge to designate a three-judge court rests upon the finding that it raises an issue of the constitutionality of an act of Congress or a Presidential proclamation.

Sugar cane and sugar beets are important domestic farm crops subject to the price support operations of the United States Department of Agriculture. Production is controlled by the Department of Agriculture to allow orderly marketing and pricing of domestic sugar. Section 22 of the Agricultural Adjustment Act, as amended (7 U.S.C. 624).

Congress authorized certain procedures under which the President may impose import fees upon sugar imported into the United States which renders or tends to render ineffective, or materially interfere with, the price support operations being conducted by the Department of Agriculture. Plaintiffs contend that Presidential Proclamation 4547 does not lawfully impose an import fee because it discriminates by country rather than by particular type of product. Plaintiffs also contend that, under the alleged facts, there is no rational basis for restricting the imports from one country as opposed to another, and that the proper procedures required by the Agricultural Adjustment Act were not followed.

Pursuant to section 22 of the Agricultural Adjustment Act, the President is empowered to cause an investigation to be made. On the basis of that investigation and the report to him of findings and recommendations the President is authorized to impose an import fee.

By Presidential Proclamation 4547 an import fee was proclaimed upon the imported sugar cane.

It is well established that Congress may authorize the President to ascertain facts which determine when duties may be imposed, suspended, varied or removed. See, e.g., *J. W. Hampton, Jr., & Company* v. *United States*, 276 U.S. 394 (1928). However, a challenge to Presidential action necessarily involves such questions as whether the delegation is constitutional; whether the President has exercised the powers within the terms of the statutory delegation or other source of powers; or whether there has been compliance with the congressionally prescribed procedure.

The defendant cites the case of *SCM Corporation* v. *United States* (*Brother International Corporation, Party-in-Interest*), 79 Cust. Ct. 163, C.R.D. 77–6, 435 F. Supp. 1224 (1977), for the proposition that a three-judge court should not be designated unless the chief judge finds special or exceptional circumstances which indicate that the action has broad or significant implications in the administration or interpretation of the customs laws. 79 Cust. Ct. at 165–166. In the *SCM* case no issue was raised which pertained to the constitutionality of a statute, a proclamation of the President, or an Executive order. Since *SCM* dealt with subdivision (2) of 28 U.S.C. 255, rather than subdivision (1), it is clearly not dispositive of the question presented in the case at bar.

Accordingly, upon the pleadings and motion in this action, the court has concluded that there is a sufficient showing that the action raises issues of the constitutionality of an act of Congress or a proclamation of the President. These issues require a three-judge panel for their consideration and determination.

The plaintiffs' motion that the chief judge designate a three-judge panel is granted.

IT IS HEREBY ORDERED that the following judges of this court serve as members of that panel: Morgan Ford, Scovel Richardson, and Frederick Landis.

(Slip Op. 80–20)

ASAHI CHEMICAL INDUSTRY COMPANY, LIMITED, PLAINTIFF *v.* THE UNITED STATES, DEFENDANT; AMERICAN YARN SPINNERS ASSOC., PARTY-IN-INTEREST

Court No. 80–5–0755–S

Memorandum Opinion and Order

(Dated: December 30, 1980)

RAO, Judge: Plaintiff, Asahi Chemical Industry Company, Ltd. (hereinafter Asahi) has moved for an order granting leave to file an

amended complaint in this antidumping case, severed from *Asahi Chemical Industry Company, Ltd. et al.* v. *United States, American Yarn Spinners Association, Party-in-Interest,* court No. 80–5–00755, by order of October 9, 1980. Its proposed complaint incorporated by reference paragraphs 1 through 59 of the complaint filed in court No. 80–5–00755, makes 51 additional allegations and adds counts XVI through XXI, as well as a statement requesting specified and general relief.

The defendant's response includes a memorandum in partial opposition to plaintiff's motion and a cross-motion for a setting of time within which to file the administrative record and respond to the amended complaint. It is defendant's position that Asahi's attempt to file an amended complaint incorporating by reference allegations and counts in court No. 80–5–00755 does not apprise defendant of the allegations and counts which defendant must answer. The basis for defendant's opposition to Asahi's amended complaint is that, by severing its cause of action from that of the other plaintiffs, Asahi has made it impossible to determine from the papers filed in the severed action what its contentions are.

The rules concerning severance of actions in this court have been generally liberally applied. The predecessor to the current rule, which would have governed had not the Customs Court Act of 1980 been enacted and the ensuing Rules of this court required to be promulgated, merely provided that the court may order a severance and separate proceeding or trial on any claim or issue. The current rule 42(b) is couched in terms of expedition and economy and provides that "the court, in furtherance of convenience or to avoid prejudice * * * may order a separate trial of any claim * * *."

This court has permitted severance to permit the determination of particular issues (see *Ataka America, Inc.* v. *United States*, 79 Cust. Ct. 171, C.R.D. 77–8 (1977); *F. W. Woolworth Co.* v. *United States*, 71 Cust. Ct. 272, C.R.D. 73–26 (1973); and *Nichols & Company, Inc.* v. *United States*, 80 Cust. Ct. 26, C.D. 4734 (1978), *aff'd* 66 CCPA —, C.A.D. 1217, 586 F. 2d 826 (1978)) without much discussion as to the pleading requirements in severed actions.

Besides rule 42(b), supra, we can look for guidance in the matter before us to rule 10(c) which pertains to adoption by reference. The clear language of this rule indicates that statements in a pleading may be adopted by reference in * * * another pleading or in any motion and that a copy of any written instrument which is an exhibit to a pleading is part thereof for all purposes.

It would appear that convenience may not best be served by having Asahi reiterate all the allegations of a complaint, a copy of which is already in defendant's possession and a copy of which is in the file of

this case. Expedition and economy are best served by keeping to a minimum the number of pleadings and other papers to be incorporated in a record which already evidences signs of becoming voluminous. Since a copy of the complaint in court No. 80–5–00755 is already part of the file of court No. 80–5–00755–S, it is unnecessary for Asahi to attach a copy of it to its amended complaint for purposes of incorporation by reference.

Plaintiff Asahi did not file a reply to defendant's cross-motion and the American Yarn Spinners Association has filed no responses in the matter currently before the court. In light of the amount of time that has elapsed since defendant filed its cross motion for additional time within which to file the administrative record and its answer, the court will allow an additional 30 days from the date of this order for the filing of the record and an additional 60 days from the date of this order for the filing of defendant's answer, which may incorporate by reference its answer to the complaint in court No. 80–5–00755.

Accordingly, it is ordered that:

1. Plaintiff's motion for leave to file the amended complaint annexed to its motion is hereby granted and the amended complaint is deemed filed from the date of this order;

2. The defendant's cross-motion is granted and the Department of Commerce is given 30 days from the date of this order in which to file the administrative record upon which the Secretary of the Treasury's less than fair value determination is based; and

3. The defendant is given 60 days from the date of this order within which to file its answer or other response to the amended complaint.

Judgment of the United States Court of International Trade in Appealed Case

DECEMBER 29, 1980

Appeal 79–39.—General Electric Company *v.* United States.—CLOCK-RADIOS—SOLID-STATE (TUBELESS) RADIO RECEIVERS—OTHER RADIO RECEPTION APPARATUS—TSUS—SUMMARY JUDGMENT.—C.D. 4822 affirmed May 1, 1980 (C.A.D. 1245), rehearing denied July 3, 1980.

110

International Trade Commission Notices

Investigations by the United States International Trade Commission

DEPARTMENT OF THE TREASURY

The appended notices relating to investigations by the U.S. International Trade Commission are published for the information of Customs officers and others concerned.

R. E. CHASEN,
Commissioner of Customs.

In the Matter of CERTAIN INCLINED-FIELD ACCELERATION TUBES AND COMPONENTS THEREOF	Investigation No. 337–TA–67

Notice of Termination of Investigation

AGENCY: U.S. International Trade Commission.

ACTION: Termination of investigation.

SUPPLEMENTARY INFORMATION: Upon receipt of a complaint filed on May 17, 1979, the Commission on June 27, 1979, published a notice of institution of an investigation (44 F.R. 37567), pursuant to section 337 of the Tariff Act of 1930, 19 U.S.C. 1337, of alleged unfair methods of competition and unfair acts in the unauthorized importation and sale of inclined-field acceleration tubes and components thereof.

On December 16, the Commission unanimously determined that there was a violation of the statute in the importation or sale of certain inclined-field acceleration tubes and components thereof that infringe claims 2–6 of U.S. Letters Patent 3,308,323 and that an exclusion order is the appropriate remedy. The Commission unanimously determined, however, that the public interest factors enumerated in subsection 337(d) of the statute preclude the imposition of a remedy.

Copies of the Commission's Action and Order, Opinion, and any other public documents in this investigation are available for inspection by the public during official working hours (8:45 a.m. to 5:15 p.m.) in the Office of the Secretary, U.S. International Trade Commission, 701 E Street NW., Washington, D.C. 20436, telephone 202–523–0161.

FOR FURTHER INFORMATION CONTACT: Michael B. Jennison, Esq., Office of the General Counsel, U.S. International Trade Commission, telephone 202–523–0189.

By order of the Commission.

Issued: December 29, 1980.

KENNETH R. MASON,
Secretary.

In the Matter of
CERTAIN AIRTIGHT WOOD STOVES } Investigation No. 337–TA–92

Order No. 1

Pursuant to my authority as chief administrative law judge of this Commission, I hereby designate Administrative Law Judge Donald K. Duvall as presiding officer in this investigation.

The Secretary shall serve a copy of this order upon all parties of record and shall publish it in the Federal Register.

Issued: December 29, 1980.

DONALD K. DUVALL,
Chief Administrative Law Judge.

In the Matter of
CERTAIN AIRTIGHT CAST-IRON STOVES } Investigation No 337–TA–69

Notice of Termination of Respondent

AGENCY: U.S. International Trade Commission.

ACTION: Termination of Crane Industries as party respondent.

SUPPLEMENTARY INFORMATION: Upon receipt of a complaint filed on May 23, 1979, the Commission on July 12, 1979, published a notice of institution of the present investigation in the Federal Register (44 F.R. 40732). That notice stated that the investigation was being undertaken to determine whether respondents' stoves were infringing Jotul's common law trademarks, infringing Jotul's registered U.S. trademarks, being passed off as Jotul's products, or being deceptively advertised and marketed.

On November 24, 1980, the complainants and the Commission investigative attorney moved to terminate respondent Crane Industries because it was no longer doing business. The motion to terminate Crane was unopposed by the other parties to the investigation.

Copies of the Commission's Action and Order, and any other public documents in this investigation are available for inspection by the public during official working hours (8:45 a.m. to 5:15 p.m.) in the Office of the Secretary, U.S. International Trade Commission, 701 E Street NW., Washington, D.C. 20436, telephone (202) 523-0161.

FOR FURTHER INFORMATION CONTACT: Jeffrey Neeley, Esq., Office of the General Counsel, U.S. International Trade Commission, telephone 202-523-0359.

By Order of the Commission.

Issued: December 30, 1980.

KENNETH R. MASON,
Secretary.

In the Matter of CERTAIN WET MOTOR CIRCULATING PUMPS AND COMPONENTS THEREOF	Investigation No. 337-TA-94

Order

Pursuant to my authority as chief administrative law judge of this Commission, I hereby designate Administrative Law Judge Janet D. Saxon as presiding officer in this investigation.

The Secretary shall serve a copy of this order upon all parties of record and shall publish it in the Federal Register.

Issued: December 31, 1980.

DONALD K. DUVALL,
Chief Administrative Law Judge.

In the Matter of CERTAIN UNIVERSAL JOINT KITS, COMPONENTS THEREOF, AND TRUNNION SEALS USED THEREWITH	Investigation No. 337-TA-93

Order No. 1

Pursuant to my authority as chief administrative law judge of this Commission, I hereby designate Administrative Law Judge Donald K. Duvall as presiding officer in this investigation.

The Secretary shall serve a copy of this order upon all parties of record and shall publish it in the Federal Register.

Issued: December 31, 1980.

DONALD K. DUVALL,
Chief Administrative Law Judge.

In the Matter of	
LEATHER WEARING APPAREL FROM URUGUAY	Investigation No. 701–TA–68 (Final)

AGENCY: United States International Trade Commission.

ACTION: Institution of a final countervailing duty investigation to determine whether an industry in the United States is materially injured, or is threatened with material injury, or the establishment of an industry in the United States is materially retarded, by reason of allegedly subsidized imports from Uruguay of leather wearing apparal, provided for in item 791.76 of the Tariff Schedules of the United States (TSUS).

EFFECTIVE DATE: December 12, 1980.

FOR FURTHER INFORMATION CONTACT: Robert Eninger, Office of Investigations, 202–523–0312.

SUPPLEMENTARY INFORMATION:

BACKGROUND

On October 15, 1980, a petition was filed with the U.S. International Trade Commission and the U.S. Department of Commerce on behalf of domestic producers of leather wearing apparel alleging that a bounty or grant is being bestowed on leather wearing apparel imported from Uruguay. On November 26, 1980, the Commission unanimously determined, on the basis of the information developed during the course of investigation No. 701–TA–68 (preliminary), that there is a reasonable indication that an industry in the United States is threatened with material injury by reason of imports from Uruguay of leather wearing apparel, provided for in item 791.76 of the TSUS, which are allegedly being subsidized by the Government of Uruguay. As a result of the Commission's determination, the Department of Commerce (the administering authority) continued its investigation into the question of subsidized sales.

On December 12, 1980, the Department of Commerce made a preliminary determination under section 703(b) of the Tariff Act of 1930 that there is a reasonable basis to believe or suspect that the

Government of Uruguay grants to manufacturers, producers, or exporters of certain leather wearing apparel benefits which constitute a subsidy within the meaning of the countervailing duty law. The merchandise covered by the Department of Commerce's investigation is leather wearing apparel currently provided for in TSUS item 791.76. Accordingly, effective December 12, 1980, the Commission instituted investigation No. 701–TA–68 (final) to determine whether an industry in the United States is materially injured, or is threatened with material injury, or the establishment of an industry in the United States is materially retarded, by reason of imports of such merchandise. This investigation will be conducted according to the provisions of part 207 of the Commission's rules of practice and procedure (19 CFR 207, 44 F.R. 76457). The final determination by the Department of Commerce of whether subsidies are being provided by the Government of Uruguay will be made not later than February 25, 1981, unless the investigation is extended.

STAFF REPORT

A staff report containing preliminary findings of fact will be available to all interested parties on February 27, 1981.

WRITTEN SUBMISSIONS

Any person may submit to the Commission on or before March 16, 1981, a written statement of information pertinent to the subject of this investigation. A signed original and nineteen (19) true copies of each submission must be filed at the Office of the Secretary, U.S. International Trade Commission Building, 701 E Street NW., Washington, D.C. 20436. All written submissions, except for confidential business data, will be available for public inspection.

Any submission of business information for which confidential treatment is desired shall be submitted separately from other documents. The envelope and all pages of such submissions must be clearly labeled "Confidential Business Information." Confidential submissions and requests for confidential treatment must conform with the requirements of section 201.6 of the Commission's rules of practice and procedure (19 CFR 201.6).

PUBLIC HEARING

The Commission will hold a public hearing in connection with this investigation on March 18, 1981, in the hearing room of the U.S. International Trade Commission Building, 701 E Street NW., Washington, D.C. 20436, beginning at 10:00 a.m., e.s.t. Resquets to appear at the hearing should be filed in writing with the Secretary to the

Commission not later than the close of business (5:15 p.m., e.s.t), March 4, 1981. All persons desiring to appear at the hearing and make oral presentations must file prehearing statements and should attend a prehearing conference to be held at 10:00 a.m., e.s.t., on March 5, 1981, in Room 117 at the U.S. International Trade Commission Building. Prehearing statements must be filed on or before March 16, 1981. For further information concerning the conduct of the investigation, hearing procedures, and rules of general applications, consult the Commission's rules of practice and procedure, part 207, subparts A and C (19 CFR 207), and part 201, subparts A through E, (19 CFR 201).

The Commission has waived Commission rule 201.12(d) as amended, "Submission of prepared statements," in connection with this investigation. This rule stated that copies of witnesses' prepared statements should be filed with the Office of the Secretary of the Commission not later than 3 business days prior to the hearing and submission of such statements shall comply with sections 201.6 and 201.8 of this subpart. It is, nevertheless, the Commission's request that parties submit copies of witnesses' prepared testimony as early as practicable before the hearing in order to permit Commission review.

This notice is published pursuant to section 207.20 of the Commission's rules of practice and procedure (19 CFR 207.20, 44 F.R. 76458).

By order of the Commission.

Issued: December 31, 1980.

KENNETH R. MASON,
Secretary.

In the Matter of CERTAIN COIN OPERATED AUDIO-VISUAL GAMES AND COMPONENTS THEREOF	Investigation No. 337–TA–87

Notice of Termination of Respondent

AGENCY: U.S. International Trade Commission.

ACTION: Termination of investigation as to respondent Taito America Corp.

SUMMARY: The Commission has terminated the above-captioned investigation as to respondent Taito America Corp. based upon Taito's sworn statement that it is not and has not imported the articles in controversy in this investigation.

SUPPLEMENTARY INFORMATION: This investigation is being conducted under section 337 of the Tariff Act of 1930 (19 U.S.C. 1337) and concerns alleged unfair trade practices in the importation into

and sale in the United States of certain coin operated audio-visual games and components thereof. The complainant, Midway Mfg. Co., the Commission investigative attorney, and respondent Taito America Corp. jointly moved to terminate the investigation as to Taito America on the basis of Taito America's sworn affidavit that it is not now, nor this investigation.

Copies of the Commission's Action and Order and all other non-confidential documents filed in connection with the investigation are available for inspection during official business hours (8:45 a.m. to 5:15 p.m.) in the Office of the Secretary, U.S. International Trade Commission, 701 E Street, NW., Washington, D.C. 20436, telephone 202–523–0155.

FOR FURTHER INFORMATION CONTACT: Clarease E. Mitchell, Esq., Office of the General Counsel, telephone 202–523–0148.

By order of the Commission.

Issued: January 7, 1981.

KENNETH R. MASON,
Secretary.

In the Matter of CERTAIN COIN-OPERATED AUDIO VISUAL GAMES AND BROCHURES FOR THE ADVERTISEMENT THEREOF	Investigation No. 337–TA–87

Notice of Commission Request for Comments Regarding Settlement Agreement

AGENCY: United States International Trade Commission

ACTION: Request for public comment on proposed settlement agreement.

SUMMARY: The proposed settlement agreement would result in termination of this investigation as to respondents Universal Co., Ltd., Universal U.S.A. Inc., and Sunrise New Sound, Inc. This notice requests comments from the public on the proposed settlement agreement within 30 days of publication of this notice in the Federal Register.

DATES: Comments will be considered if received within 30 days of publication of this notice. Comments should conform with section 201.8 of the Commission's Rules of Practice and Procedure (19 CFR 201.8), and should be addressed to Kenneth R. Mason, Secretary, U.S. International Trade Commission, 701 E Street NW., Washington, D.C. 20436.

SUPPLEMENTARY INFORMATION: On November 18, 1980, complainant Midway Mfg. Co. and respondents Universal Co., Ltd., Universal U.S.A., Inc. and Sunrise New Sound, Inc. (the importer of record for Universal Co., Ltd., and Universal U.S.A.) filed a joint motion to terminate this investigation as to those respondents on the basis of a settlement agreement. On November 24, 1980, the presiding officer recommended that the joint motion be granted.

Notice of the institution of the investigation was published in the Federal Register of June 25, 1980, (45 F.R. 124).

WRITTEN COMMENTS REQUESTED: In order to discharge its statutory obligation to consider the public interest, the Commission seeks written comments from interested persons regarding the effects of terminating this investigation as to respondents Universal Co. Ltd., Universal U.S.A., Inc. and Sunrise New Sound, Inc. on: (1) the public health and welfare, (2) competitive conditions in the U.S. economy, (3) the production of like or directly competitive articles in the United States, and (4) U.S. consumers. All written comments must be filed with the Secretary to the Commission no later than 30 days after publication of this notice in the Federal Register. In addition, pursuant to 19 CFR section 210.14(a)(2), the Commission has requested comments from the Department of Health and Human Services, the Department of Justice, the Federal Trade Commission, and the U.S. Customs Service.

ADDITIONAL INFORMATION: The original and 19 true copies of all written submissions must be filed with the Secretary to the Commission, 701 E Street NW., Washington, D.C. 20436, telephone 202–523–0161. All comments must be filed no later than 30 days after publication of this notice in the Federal Register. Any person desiring to submit a document (or portion thereof) to the Commission in confidence must request in camera treatment. Such requests should be directed to the Secretary to the Commission and must include a full statement of the reasons the Commission should grant such treatment. The Commission will either accept the submission in confidence or return it. All nonconfidential written submissions will be available for public inspection at the Secretary's Office.

FOR FURTHER INFORMATION CONTACT: Clarease E. Mitchell, Esq., Office of the General Counsel, U.S. International Trade Commission, 701 E Street NW., Washington, D.C. 20436; telephone 202–523–0148.

By order of the Commission.

Issued: January 7, 1981.

KENNETH R. MASON,
Secretary.

Index

U.S. Customs Service

Treasury decisions: T.D. No.
- Customs regulations amended, sec. 4.93(B) (1) and (2) ---- 81-14
- Customs approved public gauger ---- 81-15
- Facsimile seals and signatures ---- 81-16

Customs Service decisions:
- Bonds: C.S.D. No.
  - Right of sureties to file petitions ---- 81-3
- Classification:
  - Application of C.A.D. 1243 and C.A.D. 1244 with respect to timing apparatus ---- 81-23
  - Cast-iron replicas of early-American banks; suitability for household use ---- 81-12
  - Eo nomine tariff designation for drapery tieback ---- 81-13
  - Four-wheeled vehicle used to move logs ---- 81-2
  - Machine threshed cigar tobacco; scrap tobacco ---- 81-24
  - Radio remote controlled miniature vehicles ---- 81-22
  - Reversible pump/turbine; determination of principal purpose ---- 81-19
  - Seat post bushings and handlebar post collars; parts of bicycles or tricycles ---- 81-20
  - Unfinished pipe ells (elbows); general interpretative rule 10(c); forgings; pipe fittings ---- 81-1
  - Whether textile pencil loops on boy's denim overalls constitute ornamentation ---- 81-25
- Constructed value: Architectural drawings of building furnished to foreign fabricator of building stones ---- 81-15
- Cost of production: Allocation of fixed overhead costs; dutiability of warranty costs ---- 81-17
- Drawback: Recasting of metal in gold chains into ingots; manufacture of production under 19 U.S.C. 1313(a) ---- 81-7
- Export value: Whether a trigger price may support export value under sec. 402(b), Tariff Act of 1930, as amended ---- 81-11
- Foreign trade zones: Change in status of merchandise; eligibility for entry into Customs bonded warehouse ---- 81-8
- Generalized system of preferences: Effect of improperly completed form A ---- 81-14
- In-bond carriers and cartmen: Persons eligible to move merchandise within port limits ---- 81-4
- TIB:
  - Eligibility of unconditionally duty-free merchandise ---- 81-5
  - Acceptability of drawback procedures of proof of exportation ---- 81-6
- United States Value:
  - Actual freight charges as permissible allowances ---- 81-18
  - Deductibility of certain charges where principal market is a border point ---- 81-9

C.S.D. No.
Customs Service decisions—Continued
Valuation: Determination of country of exportation 81–10
Value:
Dutiability of charges for quota rights 81–21
Whether "Colorways" are dutiable assists 81–16

GPO : 1981 O -335-064

DEPARTMENT OF THE TREASURY
U.S. CUSTOMS SERVICE
WASHINGTON, D.C. 20229

OFFICIAL BUSINESS
PENALTY FOR PRIVATE USE, $300

POSTAGE AND FEES PAID
DEPARTMENT OF THE TREASURY (CUSTOMS)
(TREAS. 552)

15/5

Customs Bulletin

Regulations, Rulings, Decisions, and Notices concerning Customs and related matters

and Decisions

of the United States Court of Customs and Patent Appeals and the United States Court of International Trade

Vol. 15 FEBRUARY 4, ~~1980~~ 1981 No. 5

NEWARK PUBLIC LIBRARY

FEB 18 1981

U. S. GOVT. PUBS.
DEPOSITORY 276

This issue contains

T.D. 81-17 and 81-18
Slip Op. 81-1
Protest abstracts P81/1 through P81/6
Reap. abstracts R81/1 through R81/15
Recent Unpublished Customs Service Decisions
International Trade Commission Notices

THE DEPARTMENT OF THE TREASURY
U.S. Customs Service

T1.11/3.

NOTICE

The abstracts, rulings, and notices which are issued weekly by the U.S. Customs Service are subject to correction for typographical or other printing errors. Users may notify the U.S. Customs Service, Logistics Management Division, Washington, D.C. 20229, of any such errors in order that corrections may be made before the bound volumes are published.

For sale by the Superintendent of Documents, U.S. Government Printing Office, Washington, D.C. 20402. Price: $2.25 (single copy domestic); $2.85 (single copy foreign). Subscription price: $85.00 a year domestic; $106.25 a year foreign.

U.S. Customs Service

Treasury Decisions

(T.D. 81-17)

Customs Approved Public Gauger

Approval of public gauger performing gauging under standards and procedures required by Customs

Notice is hereby given pursuant to the provisions of section 151.43 of the Customs Regulations (19 CFR 151.43) that the application of Core Laboratories (Cargo Surveys), Inc., 7701 Stemmons Freeway, Dallas, Tex. 47547, to gauge imported petroleum and petroleum products in all Customs districts in accordance with the provisions of section 151.43 of the Customs Regulations is approved.

Dated: January 15, 1981.

A. Piazza,
Director, Entry Procedures and Penalties Division.

Published in the Federal Register, Jan. 27, 1981 (46 F.R. 8820)

(T.D. 81-18)

Foreign Currencies—Daily Rates for Countries Not on Quarterly List

Rates of exchange based on rates certified to the Secretary of the Treasury by the Federal Reserve Bank of New York for the Brazil cruzeiro, People's Republic of China yuan, Hong Kong dollar, Iran rial, Philippines peso, Singapore dollar, Thailand baht (tical), and Venezuela bolivar

The Federal Reserve Bank of New York, pursuant to section 522(c), Tariff Act of 1930, as amended (31 U.S.C. 372(c)), has certified buying rates for the dates and foreign currencies shown below. The rates of exchange, based on these buying rates, are published for the informa-

tion and use of Customs officers and others concerned pursuant to part 159, subpart C, Customs Regulations (19 CFR 159, subpart C).

Brazil cruzeiro:	
January 5–8, 1981	$0.0153
January 9, 1981	.0149
People's Republic of China yuan:	
January 5, 1981	$0.648593
January 6–8, 1981	.655136
January 9, 1981	.650576
Hong Kong dollar:	
January 5, 1981	$0.195046
January 6, 1981	.194932
January 7, 1981	.194894
January 8, 1981	.194401
January 9, 1981	.194250
Iran rial:	
January 5–9, 1981	Not available
Philippines peso:	
January 5–9, 1981	$0.1320
Singapore dollar:	
January 5, 1981	$0.480538
January 6–7, 1981	.480769
January 8, 1981	.480423
January 9, 1981	.479272
Thailand baht (tical):	
January 5–9, 1981	$0.0484
Venezuela bolivar:	
January 5–9, 1981	$0.2329

(LIQ-03-01 O:C:E)

Dated: January 9, 1981.

GWENN KLEIN KIRSCHNER,
Acting Chief,
Customs Information Exchange.

United States Court of International Trade

One Federal Plaza

New York, N.Y. 10007

Chief Judge

Edward D. Re

Judges

Paul P. Rao
Morgan Ford
Scovel Richardson
Frederick Landis
James L. Watson
Herbert N. Maletz
Bernard Newman
Nils A. Boe

Senior Judge

Samuel M. Rosenstein

Clerk

Joseph E. Lombardi

Decision of the United States Court of International Trade

(Slip Op. 81-1)

HARPER-WYMAN COMPANY, PLAINTIFF *v.*

THE UNITED STATES, DEFENDANT

Court No. 75-2-00425

Decision

CLASSIFICATION—PARTS OF STOVE, COMBINATION OF SWITCH AND THERMOSTAT

A device for controlling the heat in an electrical oven, consisting of a combination of a mechanical switch and a thermostat is held

to be properly classifiable as a part of a cooking stove or range. The device is not adequately described either as a switch or as a thermostat because both of those parts are important in its operation.

CLASSIFICATION—COMBINATION OF SWITCH AND SWITCH

A device for controlling the heat of the top burners of an electric range, which consisted of a mechanical switch in conjunction with a proportioning switch was merely a combination of two switches and was therefore properly classified as a switch.

[Judgment in part for plaintiff.]

(Decided January 9, 1981)

Barnes, Richardson & Colburn (*David Riggle* and *Steven Sonnenberg* of counsel) for the plaintiff.

Alice Daniel, Acting Assistant Attorney; *Joseph I. Liebman*, Attorney in Charge, International Trade Field Office, Commercial Litigation Branch (*Susan Handler-Menahem*, trial attorney, of counsel) for the defendant.

WATSON, Judge: The merchandise in this action consists of articles described in the commercial invoice as electric thermostats (product class 67—series 67) and infinite range controls (product class 66—series 66). These articles were classified under TSUS item 685.90,[1] as electrical switches, or other apparatus for making or breaking electrical circuits, dutiable at the rate of 8.5 percent ad valorem.[2]

Plaintiff-importer claims that the merchandise is properly classifiable under TSUS item 684.30, as parts of cooking stoves and ranges dutiable at the rate of 4 percent ad valorem,[3] or in the alternative, under item 711.84, TSUS, as thermostats, dutiable at the rate of 7 percent ad valorem.[4] Defendant's final position was that the series 67 merchanside should be classified as thermostats under item 711.84, TSUS, and that the series 66 merchandise was correctly classified as switches under item 685.90 or, alternatively, should be classified as thermostats, Defendant stipulated that all the merchandise is chiefly used as parts of cooking stoves and ranges.

---

[1] As amended by Presidential Proclamation No. 3822 of December 12, 1967, T.D. 68-9.

[2] Item 685.90 of the TSUS is defined as follows: Electrical switches, relays, fuses, lighting arresters, plugs, receptacles, lamp sockets, terminals, terminals strips, junction boxes and other electrical apparatus for making or breaking electrical circuits, for the protection of electrical circuits, or for making connections to or in electrical circuits; switchboards (except telephone switchboards) and control panels; all the foregoing and parts thereof.

[3] This provision reads: Electric instantaneous or storage water heaters and immersion heaters; electric soil heating apparatus, and electric space heating apparatus; electric hair dryers, hair curlers, and other electric hair dressing appliances; electric flatirons, electro-thermic kitchen and household appliances, electric heating resistors other than those of carbon; all the foregoing and parts thereof: 684.30—Cooking stoves and ranges, and parts thereof.

[4] Item 711.84 is described as follows: Pressure gauges, thermostats, level gauges, flow meters, heat meters, automatic oven-draught regulators, and other instruments and apparatus for measuring, checking or automatically controlling the flow, depth, pressure, or other variables of liquids or gases or for automatically controlling temperature, all the foregoing and parts thereof not provided for in subpart C of this part.

At the close of the trial the court ruled for plaintiff and ordered the parties to submit findings of facts and conclusions of law after the preparation of the transcript. The parties have filed their respective proposals and the court is now ready to issue judgment—a judgment which, of necessity, withdraws one of the rulings favorable to plaintiff.

SERIES 67—OVEN CONTROL

The series 67 oven control is housed in a box measuring approximately 3 inches by 3 inches. From the housing protrude a metal spindle (on which a knob is placed after importation) and a long, thin, flexible metal tube, which is the heat-sensing portion. Turning the control knob from the off position mechanically closes all the electrical contacts inside the device and allows the electricity to pass through to the heating elements in the oven. This completed electrical circuit can be broken at two or three contact points (depending on whether the device is designed to control one or two heating elements). One of those contact points is solely under the control of the initial mechanical switching portion. The other contact points are under the control of a thermostat, designed to maintain the temperature selected on the knob.

The oven heat causes fluid in the tubular sensing portion to expand into a bellows inside the control device and press open one of the contacts. That break in the electrical circuit allows the heating element to cool. When it cools to a temperature 10 to 15 degrees below the setting on the knob, the withdrawing fluid lets the bellows contract, releasing its pressure on the contact point, allowing the contact to close and heating to resume. When the user wants to shut off the oven completely, the knob is turned to the off position, thus breaking the circuit mechanically without relation to the thermostatically controlled contact.

From the above description it becomes clear that the series 67 oven control is an inseparable combination in one unit of a mechanical switch and a thermostat. The tariff schedules have a classification by name for articles which are switches and a separate classification for articles which are thermostats. However, neither one of those classifications is adequate to describe this article, in which both the mechanical switch and the thermostat play a significant functional role. Even granting the thermostat to be the most noteworthy feature of the device, the mechanical switch could not be relegated to an incidental role because, aside from being the initial switch, it is essential to the safe operation of the oven. In the event of thermostat failure, the mechanical switch is the only means to stop uncontrolled heating and its possible disastrous effects.

The device is generally comparable to the multipurpose article which served both as a switch to flash an automobile's front and rear signal lights, and as an indicator light on the dashboard to monitor the operation of the brake lights. In *Fedtro, Inc.* v. *United States*, 59 CCPA 16, 449 F. 2d 1395 (1971) the Court of Customs and Patent Appeals held that the article was not properly classifiable as a switch. A similar conclusion was reached in *Bosch Corp.* v. *United States*, 63 Cust. Ct. 96, C.D. 3881 (1969) in which this court held that an automobile starter device which combined a mechanical function of engaging the starter motor into gear with the flywheel and allowed current to move from the battery to the starter motor was more than a switch. Here, too, we have a single device containing a number of functionally distinct portions, all working to the same end. The classification which might be appropriate for a portion is not correct for the whole. The only classification which accurately describes this device as an entirety is one which recognizes its chief use as a part of a cooking stove.

For an interesting result which relied purely on relative specificity to resolve the classification of oven range controls under prior law, see *C. J. Tower* v. *United States*, 53 Cust. Ct. 260, Abstract No. 68748 (1964).

SERIES 66—INFINITE RANGE CONTROL

When the court held for the plantiff at the conclusion of the trial, it was of the impression that the relationship between the mechanical switch and the power regulating portion of the series 66 top burner control was the same in principle as the relationship between the mechanical switch and thermostat of the series 67 oven control. However, the power regulating portion of the series 66 turns out to be nothing more than another variety of switch. Originally, the court thought that it allowed an infinitely variable, continous flow of electricity, analogous to the control of a water faucet. Closer study of the exhibits and testimony show that the infinite variation is actually the result of a proportioning switch, the intermittent opening and closing of a second contact point under the influence of a heat motor. In other words, a specially constructed piece of metal located near the contact point is heated by the passage of electricity through the control device itself (not by the heat at the point of use, as in the thermostat). This piece of metal then breaks the contact with a frequency determined by its proximity to the contact point, which proximity is varied by the choice of temperature on the control knob. In short, the infinite variation is achieved by the opening and closing of a switch, making the series 66 nothing more than a combination of two switches.

The manner in which a switch breaks a circuit is of no particular importance, unless, of course, it does so in a manner which makes it an article recognized in a more specific tariff classification, such as thermostat. Accordingly, the special mechanism involved in making and breaking a circuit by means of a heat motor is still a switch. Cf. *Brown Boveri Corp.* v. *United States*, 53 CCPA 19, C.A.D. 870 (1966). See also, *Surelite Products Co.* v. *United States*, 64 Cust. Ct. 438, C.D. 4015 (1970).

For the reasons expressed above, the original ruling for plaintiff is maintained for the series 67 oven control but withdrawn for the series 66 infinite range control. Accordingly, it is held that the series 67 is properly classifiable as a part of a stove or range under item 684.30, the only classification which describes it as an entirety. The series 66 was properly classifiable as a switch under item 685.90, and that classification is affirmed.

Judgment will enter accordingly.

Decisions of the United States Court of International Trade

Abstracts

Abstracted Protest Decisions

DEPARTMENT OF THE TREASURY, *November 24, 1980.*

The following abstracts of decisions of the United States Court of International Trade at New York are published for the information and guidance of officers of the customs and others concerned. Although the decisions are not of sufficient general interest to print in full, the summary herein given will be of assistance to customs officials in easily locating cases and tracing important facts.

ROBERT E. CHASEN,
Commissioner of Customs.

DECISION NUMBER	JUDGE & DATE OF DECISION	PLAINTIFF	COURT NO.	ASSESSED	HELD	BASIS	PORT OF ENTRY AND MERCHANDISE
				Par. or Item No. and Rate	Par. or Item No. and Rate		
P81/1	Watson, J. January 7, 1981	The Georgia Marble Company	67/42814, etc.	Item 515.24 21%	Item 515.21 10.5¢ per cu. ft.	Colonna & Co., Inc. v. U.S. (C.D. 4841)	Savannah Rough quarried travertine
P81/2	Richardson, J. January 8, 1981	Border Brokerage Co., Inc.	68/18057, etc.	Item 358.01 16% Item 358.06 16%, 14%, 12.5% or 11%	Item 692.27 8.5%, 7.5%, 6.5% or 5.5%	Border Brokerage Company, Inc. v. U.S. (C.D. 4756)	Blaine (Seattle) Track tread material for motor vehicles

P81/3	Richardson, J. January 8, 1981	F. W. Myers & Co., Inc	74-1-00209-S	Item 608.05 0.3¢ per lb.	Item 608.02 Duty free	F. W. Myers & Co., Inc. v. U.S. (C.D. 4635)	Champlain-Rouses Point (Ogdensburg) Sponge iron powders
P81/4	Richardson, J. January 8, 1981	Sortex Co. of North America, Inc.	77-11-04634, etc.	Item 712.49 10%	Item 666.25 5.5%	Sortex Company of North America, Inc. v. U.S. (C.D. 4746, aff'd C.A.D. 1221)	Detroit Electronic color sorting machines and parts thereof
P81/5	Watson, J. January 8, 1981	American Hoechst Corp. et al.	67/52348, etc.	Item 400.00 7¢ per lb. + 45%	Item 406.70 40%, 30%, 32% or 28%	Agreed statement of facts	New York Colors, lakes or toners used only as coloring agents
P81/6	Watson, J. January 8, 1981	The Georgia Marble Company	67/20868, etc.	Item 514.24 21% (travertine) Item 514.47 50¢ per cu. ft. (marble)	Item: 515.21 10.5¢ per cu. ft. (travertine) Item 514.51 27.5¢ per cu. ft. (marble)	Colonna & Co., Inc. v. U.S. (C.D. 4841)	Savannah Rough quarried travertine and rough quarried marble

Decisions of the United States Court of International Trade

Abstracts

Abstracted Reappraisement Decisions

DECISION NUMBER	JUDGE & DATE OF DECISION	PLAINTIFF	COURT NO.	BASIS OF VALUATION	HELD VALUE	BASIS	PORT OF ENTRY AND MERCHANDISE
R81/1	Watson, J. January 6, 1981	Geigy Chemical Corporation	R67/13573, etc.	United States value	U.S. selling prices, less 1% cash discount as determined by customs officer at time of appraisement; less 28.3% representing profit and general expenses usually made in U.S. on sales of dyestuffs of same class or kind; less costs of transportation and insurance from place of shipment to place of delivery in amounts determined by customs officer at time of appraisement; divided by 1.40 or such other	U.S. v. Geigy Chemical Corporation et al. (C.A.D. 1155)	New York Benzenoid dyestuffs

R81/2	Watson, J. January 6, 1981	Geigy Chemical Corporation	R70/5574, etc.	United States value	factor applied by customs officer, to allow for customs duties payable on imported dyestuffs	U.S. v. Geigy Chemical Corporation et al. (C.A.D. 1156)	New York Benzenoid dyestuffs
					U.S. selling prices, less 1% cash discount as determined by customs officer at time of appraisement; less 29.2% representing profit and general expenses usually made in U.S. on sales of dyestuffs of same class or kind; less costs of transportation and insurance from place of shipment to place of delivery in amounts determined by customs officer at time of appraisement; divided by 1.40 or such other factor applied by customs officer, to allow for customs duties payable on imported dyestuffs		

DECISION NUMBER	JUDGE & DATE OF DECISION	PLAINTIFF	COURT NO.	BASIS OF VALUATION	HELD VALUE	BASIS	PORT OF ENTRY AND MERCHANDISE
R61/3	Watson, J. January 6, 1961	Railway Express Agency, Inc.	R60/28878, etc.	United States value	U.S. selling prices, less 1% cash discount as determined by customs officer at time of appraisement; less 33.4% representing profit and general expenses usually made in U.S. on sales of dyestuffs of same class or kind; less costs of transportation and insurance from place of shipment to place of delivery in amounts determined by customs officer at time of appraisement; divided by 1.40 or such other factor applied by customs officer, to allow for customs duties payable on imported dyestuffs	U.S. v. Celgy Chemical Corporation et al. (C.A.D. 1155)	New York Benzenoid dyestuffs

R81/4	Watson, J. January 6, 1981	Railway Express Agency, Inc.	R66/25743, etc.	United States value	U.S. selling prices, less 1% cash discount as determined by customs officer at time of appraisement; less 33.4% representing profit and general expenses usually made in U.S. on sales of dyestuffs of same class or kind; less costs of transportation and insurance from place of shipment to place of delivery in amounts determined by customs officer at time of appraisement; divided by 1.40 or such other factor applied by customs officer, to allow for customs duties payable on imported dyestuffs	U.S. v. Geigy Chemical Corporation et al. (C.A.D. 1155)	New York Benzenoid dyestuffs

DECISION NUMBER	JUDGE & DATE OF DECISION	PLAINTIFF	COURT NO.	BASIS OF VALUATION	HELD VALUE	BASIS	PORT OF ENTRY AND MERCHANDISE
R81/5	Watson, J. January 6, 1981	Railway Express Agency, Inc.	R67/6574, etc.	United States value	U.S. selling prices, less 1% cash discount as determined by customs officer at time of appraisement; less 24.2% representing profit and general expenses usually made in U.S. on sales of dyestuffs of same class or kind; less costs of transportation and insurance from place of shipment to place of delivery in amounts determined by customs officer at time of appraisement; divided by 1.40 or such other factor applied by customs officer, to allow for customs duties payable on imported dyestuffs	U.S. v. Geigy Chemical Corporation et al. (C.A.D. 1155)	New York Benzenoid dyestuffs
R81/6	Watson, J. January 7, 1981	Pistorino & Co., Inc.	78-10-01879	Foreign value	Appraised unit values, in Swiss francs, as set forth in red ink on invoice and/or entry papers, less 10.31%, packed, which reflects difference in quantities between kilos and pounds	Agreed statement of facts	Boston Dehydrated soups

R81/7	Watson, J. January 7, 1981	Pistorino & Co., Inc.	78-10-01880	Foreign value	Appraised unit values, in Swiss francs, as set forth in red ink on invoice and/or entry papers, less 10.31%, packed, which reflects difference in quantities between kilos and pounds	Agreed statement of facts	Boston Dehydrated soups
R81/8	Watson, J. January 7 1981	Pistorino & Co., Inc.	78-10-01881	Foreign value	Appraised unit values, in Swiss francs, as set forth in red ink on invoice and/or entry papers, less 10.31%, packed, which reflects difference in quantities between kilos and pounds	Agreed statement of facts	Boston Dehydrated soups
R81/9	Watson, J. January 7, 1981	Pistorino & Co., Inc.	78-10-01882	Foreign value	Appraised unit values, in Swiss francs, as set forth in red ink on invoice and/ or entry papers, less 10.31%, packed, which reflects difference in quantities between kilos and pounds	Agreed statement of facts	Boston Dehydrated soups

DECISION NUMBER	JUDGE & DATE OF DECISION	PLAINTIFF	COURT NO.	BASIS OF VALUATION	HELD VALUE	BASIS	PORT OF ENTRY AND MERCHANDISE
R81/10	Watson, J. January 7, 1981	Pistorino & Co., Inc.	78-10-01883	Foreign value	Appraised unit values, in Swiss francs, as set forth in red ink on invoice and/or entry papers, less 10.31%, packed, which reflects difference in quantities between kilos and pounds	Agreed statement of facts	Boston Dehydrated soups
R81/11	Watson, J. January 8, 1981	Railway Express Agency, Inc.	R67/6583	United States value	U.S. selling prices, less 1% cash discount as determined by customs officer at time of appraisement; less 24.2% representing profit and general expenses usually made in U.S. on sales of dyestuffs of same class or kind; less costs of transportation and insurance from place of shipment to place of delivery in amounts determined by customs officer at time of appraisement; divid-	U.S. v. Geigy Chemical Corporation et al. (C.A.D. 1155)	New York Benzenoid dyestuffs

best copy available

					ed by 1.40 or such other factor applied by customs officer, to allow for customs duties payable on imported dyestuffs	U.S. v. Geigy Chemical Corporation et al. (C.A.D. 1156)	New York dyestuffs Benzenoid
R81/12	Watson, J. January 8, 1981	Railway Express Agency, Inc.	R67/8273	United States value	U.S. selling prices, less 1% cash discount as determined by customs officer at time of appraisement; less 25.5% representing profit and general expenses usually made in U.S. on sales of dyestuffs of same class or kind: less costs of transportation and insurance from place of shipment to place of delivery in amounts determined by customs officer at time of appraisement; divided by 1.40 or such other factor applied by customs officer, to allow for customs duties payable on imported dyestuffs		

DECISION NUMBER	JUDGE & DATE OF DECISION	PLAINTIFF	COURT NO.	BASIS OF VALUATION	HEAD VALUE	BASIS	PORT OF ENTRY AND MERCHANDISE
R81/13	Watson J. January 8, 1981	Rohner Gehrig & Co., Inc.	R66/19134	United States value	U.S. selling prices, less 1% cash discount as determined by customs officer at time of appraisement; less 23.5% representing profit and general expenses usually made in U.S. on sales of dyestuffs of same class or kind; less costs of transportation and insurance from place of shipment to place of delivery in amounts determined by customs officer at time of appraisement; divided by 1.40 or such other factor applied by customs officer, to allow for customs duties payable on imported dyestuffs	U.S. v. Ueigy Chemical Corporation et al. (C.A.D. 1156)	New York Benzenoid dyestuffs

R81/14	Watson, J. January 8, 1981	Rohner Gehrig & Co., Inc.	R66/19751	United States value	U.S. selling prices, less 1% cash discount as determined by customs officer at time of appraisement; less 23.5% representing profit and general expenses usually made in U.S. on sales of dyestuffs of same class or kind, less costs of transportation and insurance from place of shipment to place of delivery in amounts determined by customs officer at time of appraisement; divided by 1.40 or such other factor applied by customs officer, to allow for customs duties payable on imported dyestuffs	U.S. v. Geigy Chemical Corporation et al. (C.A.D. 1155)	New York Benzenoid dyestuffs
R81/15	Newman, J. January 8, 1981	B & K Instruments, Inc.	73-9-02588-S	Export value	Invoice unit prices	Agreed statement of facts	Cleveland Miscellaneous articles

Recent Unpublished Customs Service Decisions

The following listing of recent administrative decisions issued by the Office of Regulations and Rulings, U.S. Customs Service, and not otherwise published, is published for the information of Customs officers and the importing community. Although the decisions are not of sufficient general interest to warrant publication as Treasury decisions, the listing describes the issues involved and is intended to aid Customs officers and concerned members of the public in identifying matters of interest which recently have been considered by the Office of Regulations and Rulings.

A copy of any decision included in this listing, identified by its date and file number, may be obtained in a form appropriate for public distribution upon written request to the Office of Regulations and Rulings—Attention: Legal Reference Area, Room 2404, U.S. Customs Service, 1301 Constitution Avenue NW., Washington, D.C. 20229. These copies will be made available at a cost to the requester of 10 cents per page. However, the Customs Service will waive this charge if the total number of pages copied is 10 or less.

Decisions listed in earlier issues of the CUSTOMS BULLETIN, through December 8, 1980, are available in microfiche format at a cost of $27.15 (15 cents per sheet of fiche). It is anticipated that additions to the microfiche will be made quarterly and subscriptions are available. Requests for the microfiche now available and for subscriptions should be directed to the Legal Reference Area. Subscribers will automatically receive updates as they are issued and will be billed accordingly.

Dated: January 14, 1981.

B. JAMES FRITZ,
Director,
Regulations and Information Division.

Date of decision	File No.	Issue
12- 9-80	104833	Containers: classification of steel packing crates as instruments of international traffic
12-10-80	104857	Containers: classification of steel shipping racks as instruments of international traffic
11-24-80	065244	Classification: plastic boots with folded cuff (700.60)
10- 9-80	066220	Classification: high density precompressed pressboard sheet (251.15)
11-20-80	066345	Classification: fabric tape used for book binding (347.33)

International Trade Commission Notices

Investigations by the United States International Trade Commission

DEPARTMENT OF THE TREASURY, *January 14, 1981.*

The appended notices relating to investigations by the United States International Trade Commission are published for the information of Customs Officers and others concerned.

WILLIAM T. ARCHEY,
Acting Commissioner of Customs.

In the Matter of
CERTAIN APPARATUS FOR THE CONTINUOUS PRODUCTION OF COPPER ROD

Investigation No. 337–TA–89

Notice of Denial of Motions Requesting Changes in Temporary Relief

AGENCY: U.S. International Trade Commission.

ACTIONS: Denial of request for issuance of temporary cease and desist order and denial of request for entry of goods without bond.

SUPPLEMENTARY INFORMATION: On December 2, 1980, Southwire Co., complainant in the above-captioned investigation, filed a petition for additional preliminary relief (motion 89–23) with the Commission. Southwire requested that the Commission issue a temporary cease and desist order prohibiting the Krupp and Phelps Dodge respondents from constructing and starting up the rolling mill in the Phelps Dodge facility in Norwich, Conn. On December 12, 1980, Krupp filed an answer to Southwire's motion and also asked for a modification of the existing temporary exclusion order based upon a redesign of the rolling mill (motion 89–24). The Phelps Dodge respondents supported the petition of Krupp on the two motions. The Commission investigative attorney supported the position of Southwire on the two motions. On January 9, 1980, the Commission voted to deny both motions.

Copies of the Commission's action and order and other public documents are available in the Office of the Secretary, U.S. Inter-

national Trade Commission, 701 E Street, NW., Washington, D.C. 20436, telephone 202-523-0161.

FOR INFORMATION CONTACT: Jeffrey Neeley, Esq., Office of the General Counsel, U.S. International Trade Commission, 701 E Street NW., Washington, D.C. 20436, telephone 202-523-0359

By order of the Commission.

Issued: January 12, 1981.

KENNETH R. MASON,
Secretary.

(332-122)

STUDY OF THE ECONOMIC IMPACT ON THE DOMESTIC JEWELRY INDUSTRY OF THE SUBDIVISION OF ITEM 740.10 OF THE TARIFF SCHEDULES OF THE UNITED STATES FOR PURPOSES OF THE GENERALIZED SYSTEM OF PREFERENCES

AGENCY: U.S. International Trade Commission.

ACTION: At the request of the Committee on Finance, U.S. Senate, the Commission has instituted investigation No. 332-122 under section 332(b) of the Tariff Act of 1930 (19 U.S.C. 1332(b)), for the purpose of studying the economic impact on the domestic jewelry industry of the subdivision of item 740.10 of the Tariff Schedules of the United States (TSUS) for purposes of the Generalized System of Preferences. The scheduled subdivision consists of five new TSUS items comparable to the existing seven-digit statistical breaks under TSUS item 740.10.

EFFECTIVE DATE: January 6, 1981.

FOR FURTHER INFORMATION CONTACT: Mr. Peter Bodde, General Manufactures Division, Office of Industries, U.S. International Trade Commission, Washington, D.C. 20436; 202-724-1730.

SUPPLEMENTAL INFORMATION:

PUBLIC HEARING

A public hearing in connection with the investigation will be held in the conference room of the Biltmore Hotel, Kennedy Plaza, Providence, R.I., on February 19, 1981, beginning at 10 a.m. All persons shall have the right to appear by counsel or in person, to present information, and to be heard.

WRITTEN SUBMISSIONS

In lieu of or in addition to appearances at the public hearing, interested persons are invited to submit written statements concerning the investigation. Commercial or financial information which a submitter desires the Commission to treat as confidential must be sub-

mitted on separate sheets of paper, each clearly marked "Confidential Business Information" at the top. All submissions requesting confidential treatment must conform with the requirements of section 201.6 of the Commission's Rules of Practice and Procedure (19 CFR 201.6). All written submissions, except for confidential business information, will be made available for inspection by interested persons. To be assured of consideration by the Commission, written statements should be submitted at the earliest practicable date, but no later than February 24, 1981. All submissions should be addressed to the Secretary at the Commission's office in Washington, D.C.

By order of the Commission.

Issued: January 9, 1981.

KENNETH R. MASON,
Secretary.

In the Matter of CERTAIN SPRING ASSEMBLIES AND COMPONENTS THEREOF, AND METHODS OF THEIR MANUFACTURE	Investigation No. 337–TA–88

Notice

Notice is hereby given that a prehearing conference previously scheduled for January 16, 1981 (45 F.R. 81688, December 11, 1980) will be held at 9 a.m. on February 2, 1981, immediately prior to the hearing.

The Secretary shall publish this notice in the Federal Register.

Issued: January 9, 1981.

JANET D. SAXON,
Administrative Law Judge.

In the Matter of CERTAIN SLIDE FASTENER STRINGERS AND MACHINES AND COMPONENTS THEREOF FOR PRODUCING SUCH SLIDE FASTENER STRINGERS	Investigation No. 337–TA–85

Notice of Denial of Request for Temporary Relief

AGENCY: U.S. International Trade Commission.

ACTION: Disposition of complainant's request for temporary relief.

SUMMARY: On August 29, 1980, the Commission determined not to issue a temporary exclusion order in the above-captioned investiga-

tion. The Commission found that there is no reason to believe that there is a violation of section 337 of the Tariff Act of 1930 (19 U.S.C. 1337), and that the complainant would not suffer immediate and substantial harm in the absence of temporary relief. On November 10, 1980, the complainant petitioned the Commission to reconsider its denial of temporary relief in light of the Commission opinion issued in connection with the temporary relief phase of investigation No. 337–TA–89, Certain Apparatus for the Continuous Production of Copper Rod. The Commission reaffirmed its vote on November 26, 1980.

SUPPLEMENTARY INFORMATION: This investigation, under section 337 of the Tariff Act of 1930, was instituted by notice published in the Federal Register on June 4, 1980 (45 F.R. 40242). Textron, Inc. is the complainant in this investigation. Y.K.K. (U.S.A.) Inc. and Yoshida Kogyo K.K. were named party respondents.

The Commission's action and order, and the Commissioners' opinions issued in connection therewith are available for inspection in the Office of the Secretary, U.S. International Trade Commission, 701 E Street NW., Washington, D.C. 20436, telephone 202–523–0161.

FOR FURTHER INFORMATION CONTACT: Scott Daniels, Esq., Office of the General Counsel, U.S. International Trade Commission, 701 E Street NW., Washington, D.C. 20436, telephone 202–523–0480.

By order of the Commission.

Issued: January 12, 1981.

KENNETH R. MASON,
Secretary.

PLASTIC ANIMAL IDENTIFICATION TAGS FROM NEW ZEALAND
INVESTIGATION NO. 303–TA–14 (FINAL)

Notice of Rescheduled Prehearing Conference

Notice is hereby given that the prehearing conference previously scheduled for 10 a.m., e.s.t., on January 14, 1981 (45 F.R. 76553, November 19, 1980), has been rescheduled for 2 p.m. on that date. The prehearing conference will be held in room 117 at the U.S. International Trade Commission Building, 701 E Street NW., Washington, D.C. All persons desiring to appear and make oral presentations at the public hearing to be held in connection with this investigation on January 30, 1981, should attend the prehearing conference.

By order of the Commission.

Issued: January 7, 1981.

KENNETH R. MASON,
Secretary.

In the Matter of CERTAIN WET MOTOR CIRCULATING PUMPS	Investigation No. 337–TA–94

Notice of Change of Commission Investigative Attorney

Louis S. Mastriani is designated Commission Investigative Attorney for Investigation No. 337–TA–94, Certain Wet Motor Circulating Pumps, replacing Robert M. M. Seto. The service of all papers on the Commission Investigative Attorney should henceforth be served upon Louis S. Mastriani effective January 7, 1981.

The Secretary is requested to publish this notice in the Federal Register.

Dated: January 7, 1981.

TALBOT LINDSTROM,
Chief, Unfair Import Investigations Division.

In the Matter of CERTAIN LARGE VIDEO MATRIX DISPLAY SYSTEMS AND COMPONENTS THEREOF	Investigation No. 337–TA-75

Change in Administrative Deadline

AGENCY: U.S. International Trade Commission.

ACTION: Change in deadline for recommended determination.

SUMMARY: The Commission grants the joint motion of the parties for a 30-day extension of the deadline for the presiding officer's recommendation in Investigation No. 337–TA–75, certain Large Video Matrix Display Systems and Components Thereof. The motion was approved by the presiding officer and certified to the Commission on December 8, 1980. The new deadline is March 19, 1981.

FOR FURTHER INFORMATION CONTACT: Michael B. Jennison, Esq., Office of the General Counsel, U.S. International Trade Commission, 701 E Street, NW., Washington, D.C. 20005; 202–523–0189.

Issued: January 7, 1981.

KENNETH R. MASON,
Secretary.

(332-123)

PROBABLE ECONOMIC EFFECT ON DOMESTIC INDUSTRIES OF THE DESIGNATION OF THE PEOPLE'S REPUBLIC OF CHINA AS A BENEFICIARY DEVELOPING COUNTRY FOR PURPOSES OF THE GENERALIZED SYSTEM OF PREFERENCES

AGENCY: U.S. International Trade Commission.

ACTION: Institution of an investigation under section 332(g) of the Tariff Act of 1930 (19 U.S.C. 1332(g)) at the request of the President as transmitted through the U.S. Trade Representative (USTR) for the purpose of providing the USTR with advice as to the probable economic effect on domestic industries producing articles like or directly competitive with GSP eligible articles, and on consumers, of designating the People's Republic of China (PRC) as a beneficiary developing country for purposes of the GSP.

EFFECTIVE DATE: January 12, 1981.

FOR FURTHER INFORMATION CONTACT:

Agricultural and forest products, Mr. Edward Furlow, 202-724-0068.
Textiles and apparel, Mr. Reuben Schwartz, 202-523-0114.
Chemicals, Dr. Aimison Jonnard, 202-523-0423.
Minerals and metals, Mr. Larry Brookhart, 202-523-0275.
Machinery and equipment, Mr. Aaron Chesser, 202-523-0353.
General manufactures, Mr. Walter Trezevant, 202-724-1719.

All of the above staff are in the Commission's Office of Industries. For information on legal aspects of the investigation, contact Mr. William Gearhart of the Commission's Office of the General Counsel at 205-523-0487.

SUPPLEMENTAL INFORMATION:

BACKGROUND

In the Agreement on Trade Relations between the United States of America and the People's Republic of China (PRC) signed on July 7, 1979, the United States recognized the PRC as a developing country. The PRC has indicated its desire to be designated as a beneficiary developing country under the U.S. Generalized System of Preferences (GSP) as soon as it fulfills the special conditions applicable to Communist countries which are specified in section 502(b)(1) of the Trade Act of 1974 (19 U.S.C. 2462(b)(1)). The PRC has, the USTR has advised, already fulfilled part of those conditions.

The USTR, in his letter received December 22, 1980, requesting the investigation, asked that the Commission's advice specifically identify each GSP eligible article in the Tariff Schedules of the United States for which GSP duty-free imports from the PRC would, in the Com-

mission's judgment, seriously adversely affect a domestic industry. The USTR asked that the Commission's advice be provided not later than July 1, 1981.

PUBLIC HEARING

A public hearing in connection with the investigation will be held in the Commission Hearing Room, 701 E Street NW., Washington, D.C. 20436, beginning at 10 a.m., e.s.t., on April 21, 1981, and continued on April 22 and 23, 1981, as required. All persons shall have the right to appear by counsel or in person, to present information, and to be heard. Requests to appear at the public hearing should be filed with the Secretary, U.S. International Trade Commission, 701 E Street NW., Washington, D.C. 20436, not later than noon, April 16, 1981.

WRITTEN SUBMISSIONS

In lieu of or in addition to appearances at the public hearing, interested persons are invited to submit written statements concerning the investigation. Commercial or financial information which a submitter desires the Commission to treat as confidential must be submitted on separate sheets of paper, each clearly marked "Confidential Business Information" at the top. All submissions requesting confidential treatment must conform with the requirements of section 201.6 of the Commission's Rules of Practice and Procedure (19 C.F.R. 201.6). All written submissions, except for confidential business information, will be made available for inspection by interested persons. To be assured of consideration by the Commission, written statements should be submitted at the earliest practicable date, but no later than May 15, 1981. All submissions should be addressed to the Secretary at the Commission's office in Washington, D.C.

By order of the Commission.

Issued: January 13, 1981.

KENNETH R. MASON,
Secretary.

In the Matter of CERTAIN AIRTIGHT CAST-IRON STOVES	Investigation 337–TA–69

Notice of Termination

AGENCY: U.S. International Trade Commission.

ACTION: Termination of investigation as to 21 respondents and issuance of consent orders.

SUMMARY: Notice is hereby given that the U.S. International Trade Commission has approved and issued consent orders in the above-

referenced investigation, thereby terminating the investigation as to 21 respondents: Abundant Life Farm; White Mountain, Inc.; Dutchwest India, Inc.; International Foundries, Inc.; Lou Ehrlich, Inc.; Worldwide Distributors, Inc.; Himark Enterprises, Inc.; Prebilt Corporation; Futura Energy Products, Inc. (formerly Blaze of California, Inc.); Mr. Bar-B-Q, Inc.; Basco, Inc.; Lechmere Tire and Sales Co.; Sutherland Lumber Co.; Hearth Craft, Inc.; Harbor Sales Co.; Homestead Products; Pay 'N Pak Stores, Inc.; Central Hardware; Belknap, Inc.; Omni Trading Co.; and Ranch-Rite, Inc.

SUPPLEMENTARY INFORMATION: In connection with a complaint filed on May 23, 1979, under section 337 of the Tariff Act of 1930 (19 U.S.C. 1337) of alleged unfair acts and methods of competition in the importation into or sale in the United States of certain airtight cast-iron stoves, the complainants, the Commission investigative attorney, and 21 respondents entered into consent order agreements. Complainants were Aksjelskapet Jotul, a Norwegian company, and Kristia Associates, a Maine corporation. In a notice of investigation published in the Federal Register on July 12, 1979 (44 F.R. 40732), the Commission stated that the investigation was being undertaken to determine whether respondents' stoves were infringing Jotul's common law trademarks, infringing Jotul's registered U.S. trademarks, being passed off as Jotul products, or being deceptively advertised and marketed.

Copies of the Commission's action and order and all other nonconfidential documents filed in connection with this investigation are available for inspection during official business hours (8:45 a.m. to 5:15 p.m.) in the office of the Secretary, U.S. International Trade Commission, 701 E Street NW., Washington, D.C. 20436, telephone 202–523–0161.

FOR FURTHER INFORMATION CONTACT: Jeffrey S. Neeley Esq., Office of the General Counsel, U.S. International Trade Commission, telephone 202–523–0359.

By order of the Commission.

Issued: January 12, 1981.

KENNETH R. MASON,
Secretary.

In the Matter of	
CERTAIN FOOD SLICERS AND COMPONENTS THEREOF	Investigation No. 337–TA–76

Notice of Commission Request for Comments Regarding Licensing Agreement

AGENCY: U.S. International Trade Commission.

ACTION: Request for comments from the public regarding licensing agreement.

SUMMARY: The Commission is presently considering whether to terminate Investigation 337–TA–76 as to respondent, Crest Industries Corp., on the basis of a licensing agreement entered into by complainant, Prodyne Enterprises Inc., and Crest. Termination of Crest would not end the investigation as three other respondents would remain. This notice requests comments from the public on the licensing agreement within thirty (30) days of publication of this notice in the Federal Register.

SUPPLEMENTARY INFORMATION: The investigation, pursuant to section 337 of the Tariff Act of 1930 (19 U.S.C. 1337), concerns alleged unfair acts in the importation and sale in the United States of certain food slicers. The unfair act specifically complained of is the infringment of claims of U.S. Letters Patent 3,766,817.

The Commission instituted this investigation on December 4, 1980 and published notice thereof in the Federal Register on December 21, 1979 (44 F.R. 75738). The notice named E. Mishan and Sons, Albert E. Price, Inc., Crest Industries Corp., and Taiwan Timing Trading Co. as respondents.

On August 1, 1980 complainant Prodyne Enterprises, Inc., and respondent Crest Industries Corp. entered into a licensing agreement. Pursuant to the agreement, Prodyne agreed to grant Crest a license to practice the invention covered by U.S. Letters Patent 3,766,817, and to permit Crest to import up to 10,000 food slicing devices covered by the patent per year. The license is royalty free. In return, Crest agreed to withdraw from the active defense of Investigation No. 337–TA–76.

On September 10, 1980, Prodyne and the Commission investigative attorney submitted a joint motion for summary determination against Crest and two other respondents. The Commission has determined to deny the motion for summary determination as to all three respondents.

The Commission is presently considering whether to terminate the investigation as to Crest on the basis of the licensing agreement entered into by Crest and Prodyne.

WRITTEN COMMENTS REQUESTED

There will be no oral argument regarding the proposed termination of the investigation as to Crest. However, in order to discharge its statutory obligation to consider the public interest, the Commission seeks written comments from interested persons regarding the effects of terminating the investigation as to Crest on (1) the public health and welfare, (2) competitive conditions in the U.S. economy, (3) the production of like or directly competitive articles in the United States, and (4) U.S. consumers. All written comments must be filed with the Secretary to the Commission no later than 30 days after publication of this notice in the Federal Register. In addition, pursuant to 19 CFR section 210.14(a)(2), the Commission has requested comments from the Department of Health and Human Services, the Department of Justice, the Federal Trade Commission, and the U.S. Customs Service on the effects of the proposed settlement agreement.

THE LICENSING AGREEMENT

A copy of the Prodyne/Crest licensing agreement follows this notice.

ADDITIONAL INFORMATION

The original and 19 true copies of all written submissions must be filed with the Secretary to the Commission, 701 E Street NW., Washington, D.C. 20436; telephone 202–523–0161. All comments must be filed no later than 30 days after publication of this notice in the Federal Register. Any person desiring to submit a document (or portion thereof) to the Commission in confidence must request in camera treatment. Such requests should be directed to the Secretary of the Commission and must include a full statement of the reasons why the Commission should grant such treatment. The Commission will either accept the submission in confidence or return it. All nonconfidential written submissions will be available for public inspection in the Office of the Secretary.

FOR FURTHER INFORMATION CONTACT: Warren H. Maruyama, Esq., Office of the General Counsel, U.S. International Trade Commission, 701 E Street NW., Washington, D.C. 20436; telephone 202–523–0143.

By order of the Commission.

Issued: January 8, 1981.

KENNETH R. MASON,
Secretary.

LICENSE AGREEMENT

Agreement made as of August 1, 1980 by and between Prodyne Enterprises Inc., a corporation organized under the laws of the State of California and having its principal office at P.O. Box 212, Montclair, Calif. 91763 (hereinafter called Prodyne) and Crest Industries Corp., a corporation organized under the laws of the State of New York and having a principal office at 593 Acorn Street, Deer Park, N.Y. 11729 (hereinafter called Crest).

Whereas, Prodyne is the owner of and has the right to grant licenses under U.S. Letters Patent No. 3,766,817, issued on October 23, 1973 (hereinafter called Patent Right);

Whereas, an investigation no, 337–TA–76 by the U.S. International Trade Commission, Washington, D.C., directed at the importation of certain food slicers and components thereof, initiated upon a complaint by Prodyne and involving as one of the respondents, Crest; and

Whereas, the parties desire to resolve the conflict in the International Trade Commission and it is agreed that Crest will withdraw from active defense of this investigation upon the taking of a license upon the terms and conditions hereinafter set forth;

Now, therefore, in consideration of the premises and the performance of the covenants herein contained, it is agreed;

1. Prodyne warrants that it is the owner of the entire right, title and interest in and to the Patent Right and has a right to grant the within license.

2. Prodyne grants to Crest and Crest hereby accepts from Prodyne upon the terms and conditions hereinafter specified a nonexclusive and nonassignable license to practice the invention covered by the Patent Right in the United States in the manufacture, importation, use and sale of cheese slicing devices to the full end of the term for which the Patent Right is issued, unless sooner terminated as hereinafter provided.

3. The license shall be royalty free and no payment of any kind need be made by Crest to Prodyne with respect to the granting of this license.

4. Crest shall be entitled to import within the terms of the license granted up to 10,000 cheese slicing devices covered by the Patent Right per year. Prodyne shall give authorization to allow such importation by Crest when requested to do so by Crest.

5. Crest shall keep accurate books of account containing the quantity of cheese slicers covered by the Patent Right imported per year. Said books shall be kept by Crest at its usual places where its like books are kept and shall be open at all reasonable times for 1 year

following the end of the calendar year to which they pertain, to the inspection by an independent certified public accountant to whom Crest shall have no reasonable objection, retained by Prodyne for the purpose of verifying Crest's importation of said cheese slicers per year.

6. This constitutes the entire agreement between the parties with respect to the subject matter hereunder and supersedes all previous communications, representations and agreements, either oral or written between the parties.

7. All notices shall be made by certified or registered mail addressed as first noted above unless written notification to the contrary shall be given.

8. This agreement shall be binding upon the successors or assigns of the parties hereto.

In witness whereof, the parties hereto have duly executed this agreement in duplicate as of the day and year first written above.

PRODYNE ENTERPRISES, INC.,
By: _____
CREST INDUSTRIES CORP.,
By: HERBERT ADLER,
President.

In the Matter of CERTAIN SLIDE FASTENER STRINGERS AND MACHINES AND COMPONENTS THEREOF FOR PRODUCING SUCH SLIDE FASTENER STRINGER	Investigation No. 337–TA–85

Notice of Commission Request for Comments Concerning Motion to Terminate

AGENCY: United States International Trade Commission.

ACTION: Request for public comment on motion to terminate.

SUMMARY: This notice requests public comment on the motion to terminate within thirty (30) days.

DATES: Comments will be considered if received within thirty (30) days of this notice. Comments should conform with section 201.8 of the Commission's Rules of Practice and Procedure (19 C.F.R. 201.8) and should be addressed to Kenneth R. Mason, Secretary, U.S. International Trade Commission, 701 E Street NW., Washington, D.C. 20436.

SUPPLEMENTAL INFORMATION: In connection with the Commission's investigation, under section 337 of the Tariff Act of 1930 (19 U.S.C. 1337), of alleged unfair methods of competition and unfair

acts in the importation or sale of certain slide fastener stringers and machines and components thereof for producing such slide fastener stringers in the United States, respondents Yoshida Kogyo K.K., YKK Export (USA) Inc., and YKK Export (USA) Inc., (hereafter "YKK"), and the complainant Talon Division of Textron Inc., jointly requested the Commission on December 5, 1980, to terminate the investigation. The Commission investigative attorney joined in the request to terminate. The motion to terminate notes that the patents in issue, U.S. letters Patent 3,123,103 and U.S. Letters Patent 3,143,779 will expire on March 3, 1981 and August 11, 1981. respectively. The motion further notes that the deadline for completion of this investigation is June 13, 1981. In view of the 60-day period for Presidential review of any Commission determination of violation, the parties argue that effective relief with respect to these patents is impossible, and therefore, that the public interest would not be served by a continuation of this investigation. Copies of the motion to terminate are available for inspection by interested persons in the Office of the Secretary to the Commission, 701 E Street NW., Washington, D.C. 20436, telephone 202–523–0161.

WRITTEN COMMENTS REQUESTED: In light of the Commission's duty to consider the public interest, the Commission requests written comments from interested persons and agencies concerning the effect of the termination of this investigation upon (1) the public health and welfare, (2) competitive conditions in the U.S. economy, (3) the production of like or directly competitive articles in the United States, and (4) U.S. consumers. Notice of this investigation was published in the Federal Register of June 13, 1980 (45 F.R. 40242).

ADDITIONAL INFORMATION: The original and 19 true copies of all written submissions must be filed with the Secretary of the Commission. Any person desiring to submit a document (or a portion thereof) to the Commission in confidence must request in camera treatment. Such request should be directed to the Secretary and must include a full statement of the reasons why the Commission should grant such treatment. The Commission will either accept such submission in confidence or return it. All nonconfidential written submissions will be open to public inspection at the Office of the Secretary.

FOR FURTHER INFORMATION CONTACT: Scott Daniels, Esq., Office of the General Counsel, U.S. International Trade Commission, 701 E Street NW., Washington, D.C. 20436; telephone 202–523–0480.

By order of the Commission.

Issued: December 30, 1980.

KENNETH R. MASON,
Secretary.

In the Matter of CERTAIN COMPUTER FORMS FEEDING TRACTORS AND COMPONENTS THEREOF	Investigation No. 337–TA–77

Notice of Termination of Investigation

AGENCY: U.S. International Trade Commission.

ACTION: Termination of investigation based on settlement agreement.

SUMMARY: Having reviewed the record in this investigation, including the presiding officer's recommendation, the Commission has voted to grant the parties' joint motion to terminate (motion docket No. 77–7) and is ordering the termination of investigation No. 337–TA–77, Certain Computer Forms Feeding Tractors and Components Thereof. The motion was joined by all parties to the investigation.

PETITIONS FOR RECONSIDERATION: Any party wishing to petition for reconsideration of the Commission's action must do so within 14 days of service of the Commission order. Such petitions must be in accord with Commission Rule 210.56 (19 CFR 210.56).

SUPPLEMENTARY INFORMATION: On January 10, 1980 the Commission instituted an investigation, pursuant to section 337 of the Tariff Act of 1930 (19 U.S.C. 1337), of alleged unfair methods of competition and unfair acts in the importation and sale of certain computer forms feeding tractors and components thereof. The Commission published notice of the institution of its investigation in the Federal Register on January 30, 1980 (45 F.R. 6867). On August 19, 1980, complainant Precision Handling Devices, Inc., respondents Shinshu Seiki Co., Ltd. and Epson America, Inc., and the Commission investigative attorney jointly moved to terminate the investigation on the basis of a settlement agreement entered into by complainant and respondents. The presiding officer recommended that the Commission grant the motion.

The Commission published notice of the proposed settlement agreement in the Federal Register on December 6, 1980, and requested comments from the public. No comments adverse to termination were received.

Copies of the Commission's Action and Order, and any other public documents in this investigation are available for inspection during official working hours (8:45 a.m. to 5:15 p.m.) in the Office of the Secretary, U.S. International Trade Commission, 701 E Street NW., Washington, D.C. 20436; telephone 202–523–0161. The settlement agreement entered into by the parties contains confidential business

information subject to a protective order and is not available for public examination.

FOR FURTHER INFORMATION CONTACT: Warren H. Maruyama, Esq., Office of the General Counsel, U.S. International Trade Commission, 701 E Street NW., Washington, D.C. 20436; telephone 202–523–0143.

By order of the Commission.

Issued: December 30, 1980.

KENNETH R. MASON,
Secretary.

Index

U.S. Customs Service

T.D. No.

Treasury Decisions:
Customs Approved Public Gauger 81-17
Foreign Currencies: Daily Rates for Countries not on Quarterly List . 81-18

U. S. GOVERNMENT PRINTING OFFICE : 1981 O - 336-473

DEPARTMENT OF THE TREASURY
U.S. CUSTOMS SERVICE
WASHINGTON, D.C. 20229

OFFICIAL BUSINESS
PENALTY FOR PRIVATE USE, $300

POSTAGE AND FEES PAID
DEPARTMENT OF THE TREASURY (CUSTOMS)
(TREAS. 552)

15/6

Customs Bulletin

Regulations, Rulings, Decisions, and Notices concerning Customs and related matters

and Decisions

of the United States Court of Customs and Patent Appeals and the United States Court of International Trade

Vol. 15 FEBRUARY 11, 1981 No. 6

NEWARK PUBLIC LIBRARY

MAR 11 1981

U. S. GOVT. PUBS.
DEPOSITORY 376

This issue contains

T.D. 81-19 through 81-22
C.S.D. 81-26 through 81-51
Slip Op. 81-2 through 81-8
Protest abstracts P81/7 through P81/10
Reap. abstracts R81/16 through R81/33
Recent Unpublished Customs Service Decisions
Appeal to U.S. Court of International Trade
International Trade Commission Notices

THE DEPARTMENT OF THE TREASURY
U.S. Customs Service

T.11/3:

NOTICE

The abstracts, rulings, and notices which are issued weekly by the U.S. Customs Service are subject to correction for typographical or other printing errors. Users may notify the U.S. Customs Service, Logistics Management Division, Washington, D.C. 20229, of any such errors in order that corrections may be made before the bound volumes are published.

For sale by the Superintendent of Documents, U.S. Government Printing Office, Washington, D.C. 20402. Price: $2.25 (single copy domestic); $2.85 (single copy foreign). Subscription price: $85.00 a year domestic; $106.25 a year foreign.

U.S. Customs Service

Treasury Decisions

(T.D. 81-19)

Vessel Manifest Filing Procedure and Disclosure Requirements—Customs Regulations Amended

Parts 4 and 103, Customs Regulations, relating to vessels in foreign and domestic trades and availability of information, amended

TITLE 19—CUSTOMS DUTIES

CHAPTER I—U.S. CUSTOMS SERVICE

PART 4—VESSELS IN FOREIGN AND DOMESTIC TRADES

PART 103—AVAILABILITY OF INFORMATION

AGENCY: U.S. Customs Service, Department of the Treasury.

ACTION: Final rule.

SUMMARY: Public Law 96-275, an Act to protect the confidentiality of Shippers' Export Declarations, and to standardize export data submission and disclosure requirements, made changes in laws enforced by Customs. This document amends the Customs Regulations to establish new procedures needed to reflect those changes.

Specifically, the amended regulations will (1) require that copies of bills of lading or equivalent commercial documents relating to all cargo encompassed by the outward manifest be attached to that manifest (now an alternative procedure), (2) modify the procedure whereby a shipper may request confidential treatment for certain information, (3) expand the information contained in an outward manifest subject to public disclosure, (4) allow the Secretary of the Treasury to withhold information from manifests on a shipment-by-shipment basis if disclosure "is likely to pose a threat of personal injury or property damage," and (5) provide a biennial renewal period for a shipper's certification claiming (application for) confidential treatment.

EFFECTIVE DATES: Amendment to section 4.63, Customs Regulations (19 CFR 4.63), (upon publication in the Federal Register); amendment to section 103.11, Customs Regulations (19 CFR 103.11), (60 days from date of publication in the Federal Register).

FOR FURTHER INFORMATION CONTACT: Disclosure aspect: Doris Robinson, Regulations and Information Division (566–8681); manifest filing procedure aspect: Jerry Laderberg, Carriers, Drawback and Bonds Division (566–5706), or Pete D'Heur, Cargo Processing Division (566–5354).

SUPPLEMENTARY INFORMATION:

BACKGROUND

Public Law 96–275, an act "to protect the confidentiality of Shippers' Export Declarations, and to standardize export data submission and disclosure requirements," was approved on June 17, 1980. Section 2 of the act amends 46 U.S.C. 93 to require amendments to the Customs Regulations to implement new procedures established by the statute. Section 4(b) of the act made the amendment to 46 U.S.C. 93 effective 45 days after enactment of the statute, i.e., August 1, 1980.

The outward manifest consists of several documents, but is primarily a cargo declaration that is presented to Customs when a vessel departs the United States (clears) for a foreign destination. Section 4.63, Customs Regulations, now provides for the filing with Customs of a Cargo Declaration, Customs Form (CF) 1302, which is a composite of the information contained in bills of lading and other commercial documents. Alternatively, Customs permits the filing of a Cargo Declaration, Outward With Commercial Forms, CF 1302–A, to which all necessary bills of lading and other commercial documents must be attached. The result of this amendment is to make the current alternative procedure of filing a CF 1302–A with attachments mandatory, and eliminate the use of the CF 1302 (without attachments) as part of outward manifests. The CF 1302 may continue to be used if bills of lading or equivalent commercial documents relating to all cargo are attached to that form.

Section 103.11, Customs Regulations, presently provides for disclosure to the public and the press of certain information contained in vessel manifests and summary statistical reports, as well as the suspension of disclosure upon written application of a shipper, consignee, or importer. That section has been amended in accord with the requirements of the statute to (1) expand the information contained in an outward manifest which is subject to public disclosure to include the address of the shipper and the port of exit, (2) allow the Secretary of the Treasury to withhold information from outward manifests on a

shipment-by-shipment basis if disclosure "is likely to pose a threat of personal injury or property damage," and (3) provide a biennial renewal period for a shipper's certification claiming confidential treatment of the shipper's name and address contained in the outward manifest.

In addition, section 103.11 has been amended to describe the new certification a shipper must file with Customs to be granted confidential treatment of his/her name and address.

The act makes available for public disclosure the name and address of the shipper unless a biennial certification claiming confidential treatment is received by Customs. For shippers claiming confidentiality after August 1, 1980, their certifications will be valid for 2 years from the date of the submission to Customs of the certification. A shipper who, before August 1, 1980, had applied for and obtained Customs approval of a claim for confidential treatment of the shipper's name, must submit to Customs a new certification claiming confidentiality of the shipper's name and address if desired, following the procedure described in amended section 103.11. However, claims of confidentiality made by a shipper and approved by Customs prior to August 1, 1980, will continue in effect until 60 days after the publication in the Federal Register of this final rule document (Treasury Decision) amending the Customs Regulations to implement the new law. In either case, the burden of certification renewal rests with the shipper.

In this regard, Customs published a General Notice in the Federal Register on August 20, 1980 (45 F.R. 55559), advising exporters and others of the new procedure required by the act.

Customs does not intend to verify either the certification itself or whether confidentiality should be granted in a given case. Therefore, lacking information to arouse suspicion of falsehood, Customs will accept routinely any certification at face value.

APPLICABILITY OF EXECUTIVE ORDER 12044

These amendments are not considered to be significant under the criteria contained in the Treasury Directive published in the Federal Register on November 8, 1978 (43 F.R. 52150), implementing E.O. 12044, "Improving Government Regulations." They were the subject of work plan 80–8, approved by the Treasury Department on October 9, 1980.

INAPPLICABILITY OF PUBLIC NOTICE AND DELAYED EFFECTIVE DATE PROVISIONS

The legislative process leading to the enactment of Public Law 96–275 already has afforded a measure of public participation. In addi-

tion, (1) a telex describing the changes in outward manifest procedures was transmitted to Customs field offices (and made available to the public by those offices), (2) the text of the law was published as T.D. 80–184 in the CUSTOMS BULLETIN of July 23, 1980, to provide wider dissemination of the statutory changes, and (3) a general notice advising the exporting community of the changes in procedure regarding disclosure of information was published in the Federal Register on August 20, 1980 (45 F.R. 55559).

Because the subject matter of this amendment merely implements specific statutory requirements, pursuant to 5 U.S.C. 553(b)(B), notice and public procedure thereon are found to be unnecessary, and, in respect to the amendment to section 4.63, Customs Regulations, relating to manifest filing procedures, a delayed effective date is not required pursuant to 5 U.S.C. 553(d)(3).

DRAFTING INFORMATION

The principal author of this document was Todd J. Schneider, Regulations and Information Division, Office of Regulations and Rulings. However, personnel from other Customs offices participated in its development.

AMENDMENTS TO THE REGULATIONS

Parts 4 and 103, Customs Regulations (19 CFR parts 4, 103), are amended as set forth below.

PART 4—VESSELS IN FOREIGN AND DOMESTIC TRADES

Section 4.63 is amended to read as follows:

4.63 Outward cargo declaration; shippers' export declarations.

(a) No vessel shall be cleared directly for a foreign port, or for a foreign port by way of another domestic port or other domestic ports (see section 4.87(b)), unless there has been filed with the district director at the port from which clearance is being obtained (1) a Cargo Declaration, Customs Form 1302, or a Cargo Declaration Outward With Commercial Forms, Customs Form 1302–A, either form with copies of bills of lading or equivalent commercial forms relating to all cargo encompassed by the manifest attached thereto (i.e., with attachments), together with a properly executed Master's Oath on Entry of Vessel in Foreign Trade, Customs Form 1300, and such export declarations as are required by pertinent regulations of the Bureau of the Census, Department of Commerce, or (2) an incomplete Cargo Declaration as provided for in section 4.75.

(b) Except as hereafter stated, the number of the export declaration covering each shipment for which an authenticated export declaration

is required shall be shown on the Cargo Declaration, Customs Form 1302 (with attachments) or 1302–A, in the marginal column headed "B/L No." If an export declaration is not required for a shipment, a notation shall be made on the Cargo Declaration describing the basis for the exemption with a reference to the number of the section in the Census Regulations (see sections 30.39 and 30.50–30.57, title 15, Code of Federal Regulations) where the particular exemption is provided. Where shipments are exempt on the basis of value and destination, the appearance of the value and destination on a bill of lading or other commercial form is acceptable as evidence of the exemption and reference to the applicable section in the Census Regulations is not required.

(c) The list of cargo may be shown on bills of lading, cargo lists, or other commercial forms, provided that:

(1) The Cargo Declaration, Customs Form 1302 (with attachments) or 1302–A, is completely executed except for particulars as to cargo;

(2) The commercial forms are securely attached to the Cargo Declaration in such manner as to constitute one document;

(3) The commercial forms are incorporated by a suitable reference on the face of the Cargo Declaration such as, "Cargo as per attached commercial forms;" and

(4) There is shown on the face of each such commercial form the information required by the Cargo Declaration for the cargo covered by that form.

(d) For each shipment to be exported under an entry or withdrawal for exportation or for transportation and exportation, the Cargo Declaration, Customs Form 1302 (with attachments) or 1302–A, or commercial document attached to the Cargo Declaration and made a part thereof in accordance with paragraph (c) of this section shall clearly show for such shipment the number, date, and class of such Customs entry or withdrawal (i.e., T. & E., Wd. T. & E., I.E., Wd. Ex., or Wd. T., as applicable) and the name of the port where the entry or withdrawal was filed if other than the port where the merchandise is laden for exportation.

(e) Customs officers shall accept a Cargo Declaration, Customs Form 1302 (with attachments) or 1302–A, covering containerized or palletized cargo which indicates by the use of appropriate words of qualification (see section 4.7a(c)(3)) that the declaration has been prepared on the basis of information furnished by the shipper.

(R.S. 251, as amended, 4197, as amended, 4199, as amended, 4200, as amended, section 624, 46 Stat. 759 (19 U.S.C. 66, 1624; 46 U.S.C. 91, 92, 93), and Pub. L. 96–275, June 17, 1980.)

PART 103—AVAILABILITY OF INFORMATION

Section 103.11 is amended to read as follows:

103.11 Information on vessel manifests and summary statistical reports.

(a) *Disclosure to members of the press.* Although the following classes of information are exempt from the requirement of disclosure under the provisions of section 103.10, accredited representatives of the press, including newspapers, commercial magazines, trade journals, and similar publications may be permitted to examine vessel manifests and summary statistical reports of imports and exports and to copy therefrom for publication information and data not of a confidential nature, subject to the following rules:

(1) Of the information and data appearing on outward manifests, only the name and address of the shipper, general character of the cargo, number of packages and gross weight, name of vessel or carrier, port of exit, port of destination, and country of destination may be copied and published. However, if the Secretary of the Treasury makes an affirmative finding on a shipment-by-shipment basis that disclosure of the above information is likely to pose a threat of personal injury or property damage, that information shall not be disclosed to the public.

(2) Commercial or financial information, such as the names of the consignees, and marks and numbers shall not be copied from outward manifests or any other papers.

(3) Of the information shown on inward manifests, only the name of the consignee, the general character of the commodity, the quantity (or value), name of vessel, and the country of dispatch shall be copied and published. When an inward manifest shows both quantity and value of the commodity, either may be copied and published, but not both in any instance.

(b) *Review of data.* All copies and notations from inward or outward manifests shall be submitted for examination by a Customs officer designated for that purpose.

(c) *Disclosure to the public.* Members of the public shal be permitted to obtain information from, but not examine, vessel manifests, subject to the rules set forth in paragraphs (a) and (b) of this section. However, importers and exporters or their duly authorized brokers, attorneys, or agents may be permitted to examine manifests with respect to any consignment of goods in which they have a proper and legal interest as principal or agent, but shall not be permitted to make any general examination of manifests or make any copies or notations from them except with reference to the particular importation or exportation in which they have a proper and legal interest.

(d) *Suspension of disclosure.* (1) Inward manifest. Except as provided in section 103.14, upon written application of a consignee or importer, access to the name of such consignee or importer, on an inward manifest will thereafter be refused.

(2) Outward manifest. If a shipper wishes to request confidential treatment by Customs of the shipper's name and address contained in an outward manifest, the following procedure shall be followed:

(i) A shipper, or authorized employee or official of the shipper, must submit a certification claiming confidential treatment of the shipper's name and address. The certification shall include the shipper's Internal Revenue Service employer number, if available.

(ii) There is no prescribed format for a certification.

(iii) The certification must be submitted to the Regional Commissioner for the region in which the port of exportation is located.

(iv) Each certification will be valid for a period of two (2) years from the date of its submission to Customs.

(3) If any individual shall abuse the privilege granted him of examining inward and outward manifests or shall make any improper use of any information or data obtained from such manifests or other papers filed in the customhouse, both he and the party or publication which he represents shall thereafter be denied access to such papers.

(R.S. 251, as amended, sec. 624, 46 Stat. 759, sec. 501, 65 Stat. 290, as amended (5 U.S.C. 522, 19 U.S.C. 66, 1624).)

WILLIAM T. ARCHEY,
Acting Commissioner of Customs.

Approved: January 14, 1981.

RICHARD J. DAVIS,
Assistant Secretary of the Treasury.

[Published in the Federal Register, Jan. 29, 1981 (46 F.R. 9567)]

(T.D. 81-20)

Customs Approved Public Gauger

Approval of public gauger performing gauging under standards and procedures required by Customs

Notice is hereby given pursuant to the provisions of section 151.43 of the Customs Regulations (19 CFR 151.43) that the application of Columbia Inspection, Inc., 7200 N. Fessenden Street, Portland, Oreg. 97203, to gauge imported petroleum and petroleum products in the Customs districts of Portland, Oreg., Seattle, Wash., Houston,

336-949 0 - 81 - 2

Tex., and Los Angeles, Calif., in accordance with the provisions of section 151.43 of the Customs Regulations is approved.

Dated: January 23, 1981.

A. PIAZZA,
Director,
Entry, Procedures and Penalties Division.

[Published in the Federal Register, Jan. 29, 1981 (46 F.R. 9844)]

(T.D. 81-21)

Cotton, Wool and Manmade Fiber Textile Products—Restriction on Entry

Restriction on entry of cotton, wool, and manmade fiber textile products manufactured or produced in Taiwan

There is published below a directive of November 7, 1980, received by the Commissioner of Customs from the Chairman, Committee for the Implementation of Textile Agreements, concerning a change in the definition of certain traditional Chinese exempt items manufactured or produced in Taiwan. This directive amends, but does not cancel, that Committee's directive of October 30, 1978 (T.D. 78-475).

This directive was published in the Federal Register on November 21, 1980 (45 F.R. 77103), by the Committee.

(QUO-2-1)

Dated: January 26, 1981.

WILLIAM D. SLYNE
(For Richard R. Rosettie, Acting
Director, Duty Assessment Division).

UNITED STATES DEPARTMENT OF COMMERCE,
INTERNATIONAL TRADE ADMINISTRATION,
Washington, D.C., November 7, 1980.

Committee for the Implementation of Textile Agreements

COMMISSIONER OF CUSTOMS,
Department of the Treasury,
Washington, D.C.

DEAR MR. COMMISSIONER: This directive further amends, but does

not cancel, the directive of October 30, 1976, which amended the definition for traditional Chinese padded jackets from Taiwan.

Under the terms of the Arrangement Regarding International Trade in Textiles done at Geneva on December 20, 1973, as extended on December 15, 1977; pursuant to the Bilateral Agreement of June 8, 1978, as amended, concerning cotton, wool and manmade fiber textile products exported from Taiwan, and in accordance with the provisions of Executive Order 11651 of March 3, 1972, as amended by Executive Order 11951 of January 6, 1977, you are directed, effective on December 1, 1980, to further amend the definition for traditional Chinese padded jackets in the directive of October 30, 1978 to include the following:

Traditional Chinese Garments:

1. *Jackets*, three-quarter length or shorter, of woven fabric usually with Chinese figures in the weave but may be plain/woven otherwise figured or printed. They have a low mandarin collar, long sleeves, and full frontal openings, with "frog" type closures (looped fastenings made of braid, cording, et cetera, used with a matching knot or toggle of the same material).

2. *Fur or imitation fur-lined jackets*, which may or may not be reversible, and are otherwise identical in appearance and construction with the jackets described above.

3. *Vest*, sleeveless garments extending from the neck area to waist, with or without pockets at the waist. They are otherwise identical in appearance and construction with the jackets described above.

The actions taken with respect to the Government of Taiwan and with respect to imports of cotton, wool, and manmade fiber textile products from Taiwan have been determined by the Committee for the Implementation of Textile Agreements to involve foreign affairs functions of the United States. Therefore, these directions to the Commissioner of Customs, which are necessary for the implementation of such actions, fall within the foreign affairs exception to the rule-making provisions of 5 U.S.C. 553. This letter will be published in the Federal Register.

Sincerely,

PAUL T. O'DAY,
Chairman, Committee for the
Implementation of Textile Agreements.

(T.D. 81-22)

Foreign Currencies—Daily Rates for Countries Not on Quarterly List

Rates of exchange based on rates certified to the Secretary of the Treasury by the Federal Reserve Bank of New York for the Brazil cruzeiro, People's Republic of China yuan, Hong Kong dollar, Iran rial, Philippines peso, Singapore dollar, Thailand baht (tical), and Venezuela bolivar.

The Federal Reserve Bank of New York, pursuant to section 522(c), Tariff Act of 1930, as amended (31 U.S.C. 372(c)), has certified buying rates for the dates and foreign currencies shown below. The rates of exchange, based on these buying rates, are published for the information and use of Customs officers and others concerned pursuant to part 159, subpart C, Customs Regulations (19 CFR 159, subpart C)

Brazil cruzeiro:	
January 12-16, 1981	$0. 0149
People's Republic of China yuan:	
January 12, 1981	$0. 650576
January 13-15, 1981	. 647291
January 16, 1981	. 642797
Hong Kong dollar:	
January 12, 1981	$0. 194175
January 13, 1981	. 193349
January 14, 1981	. 193069
January 15, 1981	. 193162
January 16, 1981	. 192901
Iran rial:	
January 12-16, 1981	Not available
Philippines peso:	
January 12-16, 1981	$0. 1320
Singapore dollar:	
January 12, 1981	$0. 479962
January 13, 1981	. 477441
January 14, 1981	. 479042
January 15, 1981	. 479616
January 16, 1981	. 481000
Thailand baht (tical):	
January 12-16, 1981	$0. 0484
Venezuela bolivar:	
January 12-16, 1981	$0. 2326

(LIQ-3-01 O:C:E)
Date: January 16, 1981.

GWENN KLEIN KIRSCHNER,
Acting Chief,
Customs Information Exchange.

U.S. Customs Service

Customs Service Decisions

DEPARTMENT OF THE TREASURY,
OFFICE OF THE COMMISSIONER OF CUSTOMS,
Washington, D.C.

The following are decisions made by the U.S. Customs Service where the issues involved are of sufficient interest or importance to warrant publication in the CUSTOMS BULLETIN.

DONALD W. LEWIS,
Director,
Office of Regulations and Rulings.

(C.S.D. 81-26)

Brokers: Powers of Attorney; Powers of Attorney Granted to Employees of Broker; Filing Requirement

Date: March 27, 1980
File: ENT-1-01:RRUEE
712651 MK

This refers to your letter of March 7, 1980, requesting our interpretation of section 141.46, Customs Regulations. You state that some marine divisions contend that a customhouse broker must have a power of attorney filed in the marine division to transact marine business. You interpret that provision as applying to all Customs business transacted by a broker, including vessel, vehicle, and air transactions. You also believe that section 141.46 requires a broker to have a power of attorney from his principal, but that the broker is not required to file that power of attorney with Customs in order to transact any business, including marine transactions.

We interpret section 141.46 as providing that a broker shall retain powers of attorney granted to him with his books and records. However, powers of attorney which a broker grants to his employees, or a statement identifying them must be filed with the appropriate District Director, in accordance with section 111.3(b) of the regulations.

Transactions under Customs laws and regulations relating to vessel, vehicle and air transportation are included among the types of Customs business which a broker may be authorized to conduct on behalf of his principal. These are generally described in the Customs power of attorney form, CF 5291.

To insure uniform interpretation of the cited provisions, we will distribute copies of this ruling to all ports.

(C.S.D. 81-27)

Exemptions: Customs Treatment of United States Residents Who Own or Rent Vacation Homes in Foreign Countries

Date: April 3, 1980
File: BAG-5-05-RRUEE
711763 JB

This ruling concerns residents of the United States who own or rent seasonal homes or otherwise reside seasonally in a contiguous country and who return on incidental visits to the United States claiming optional nonresident status for free entry of articles acquired abroad, including vehicles of foreign manufacture.

Issue.—May a resident of the United States who owns or rents a seasonal home or otherwise resides seasonally in a contiguous country and visits the United States on incidental trips enter personal effects acquired abroad, including a foreign automobile, on such occasions under optional claim of nonresident status?

Facts.—A resident of the United States owns a summer residence in British Columbia, Canada, where he lives in the summer season. The person is regarded as a seasonal summer visitor by Canadian authorities and is not required to obtain a visa. He maintains a car of European manufacture, purchased abroad, at the summer home yearround and is required to register the vehicle in the Canadian province. The car is driven to neighboring areas in the United States on occasion and he wishes to enter it free of duty under optional claim for nonresident status when arriving in the United States for short trips. The automobile presumably conforms to Federal motor vehicle safety and emission standards.

Law and Analysis.—In T.D. 51679, May 20, 1947, the Customs Service ruled on the applicability of the then existing $100 exemption to U.S. residents who owned or rented homes or cottages in a foreign country for the season. In those cases where the person continued to reside in the United States and visited the foreign country several times weekly, he would be treated as a returning resident on his various

arrivals and allowed the $100 exemption, subject to the 48-hour and 30-day provisions. In those cases where the person lived for the season in the foreign country, and returned to the United States daily for work or for short periods only, he would be treated as a person arriving incident to foreign travel (see section 148.17 of the present Customs Regulations). This person would be entitled to the personal exemption of $100 upon his final return to the United States at the end of the season. Neither of these alternatives provide an exemption from duty for dutiable articles, based on the condition that the articles will be taken back out of the country.

The individual involved in the present situation clearly falls within the second category above, since he lives for the season in Canada, and only visits the United States several times during the season. Accordingly, the foreign vehicle he drives into the United States would be subject to duty on his first arrival in the United States. His personal exemption of $300 could be applied against the value of the vehicle, if available. The vehicle would be free of duty on subsequent trips into and out of the U.S., upon satisfying Customs that duty had been paid on the first arrival.

Since the issuance of T.D. 51679, sections 148.2(d) and 148.8, regarding optional nonresident status, have been added to the Customs Regulations. These sections authorize persons who would otherwise be treated as returning residents to claim the status of nonresidents when they visit the United States for short visits. This enables them to bring in various articles of personal property free of duty for use during their visits, provided they take them out of the country when they leave. The articles would be subject to duty on the person's final return to the United States, of course, if he still had them. This provision is intended for the benefit of those residents of the United States who are employed abroad or are otherwise living abroad for extended periods of time, and visit the United States occasionally during this time. It clearly was not intended to apply to the many U.S. residents who are vacationing abroad or living abroad for a few days, weeks, or months during the year, and whose status is covered by section 148.17 of the Customs Regulations and T.D. 51679.

Holding.—A resident of the United States who resides seasonally in a contiguous foreign country and who returns to the United States on incidental trips may not claim optional nonresident Customs status for short visits in order to enter accompanying articles acquired abroad under the personal exemptions from duty and tax available to nonresidents. The articles acquired abroad may be entered under the personal exemptions available to returning residents if they apply. If duty is paid on the articles, the items may be entered duty free on subsequent importations upon satisfying Customs officers that duty has been paid.

(C.S.D. 81-28)

Entry: Whether a Civil Aircraft Which Previously Received Drawback is Entitled to Duty-Free Entry Under the Civil Aircraft Agreement

Date: April 15, 1980
File: ENT-1-01:RRUEE
712699 EM

This ruling concerns whether a civil aircraft which previously received drawback is entitled to duty free entry under the Civil Aircraft Agreement. (Title VI of Public Law 96-39).

Issue.—Does the fact that a civil aircraft previously received drawback preclude it from being entered duty free under the Civil Aircraft Agreement?

Facts.—An American company has sold a number of its aircraft to major commercial carriers throughout the world. It has been the practice of that company to obtain drawback on all aircraft sold and delivered to foreign carriers. A number of such aircraft are returned at various times by the foreign carriers to the American manufacturer for modification. The American company wishes to enter such aircraft when returned as duty free under the Civil Aircraft Agreement.

Law and Analysis.—The Agreement on Trade in Civil Aircraft provides, among other things, that all civil aircraft as defined in that agreement are entitled to duty free entry. Section 601 of Public Law 96-39, the statute enacting into law this agreement, was intended to cover civil aircraft, as well as civil aircraft parts. However, the section is so worded that it is questionable whether the statute as presently written covers civil aircraft. A technical amendment has been introduced in Congress, which would clarify this language so as to indicate that civil aircraft are so covered. In the interim, Customs is accepting duty free entries for qualified civil aircraft and is withholding liquidation of such entries pending the passage of this technical amendment.

We believe that civil aircraft exported with the benefits of drawback are not precluded upon reimportation from being entered duty free under the Civil Aircraft Agreement provided there was a bona fide exportation for drawback purposes. Neither the statute nor the trade agreement prohibits a civil aircraft or a civil aircraft part from being entered under the Civil Aircraft Agreement because such article had previously received the benefits of drawback. Absent specific language on this point, we believe such aircraft would not be precluded from duty-free entry under the Civil Aircraft Agreement. (T.D. 49162, ORR ruling 75-0134, and ORR rulings No. 041235 E dated August 20, 1975, and 209643 dated December 28, 1978 noted.)

Holding.—The fact that a civil aircraft had previously received drawback would not preclude it from being entered as duty free under the Civil Aircraft Agreement.

It is also pointed out that the present wording of section 601 is ambiguous as to whether civil aircraft are covered and that because of such ambiguity Customs is accepting duty-free entries of such merchandise, but is withholding liquidation of such entries.

(C.S.D. 81-29)

Bonds: Termination of Liability on Customs Bonds; Clarification of Terms

Date: May 12, 1980
File: BON-1-RRUCDB WR 211485

Issue.—Whether termination of a bond is equivalent to cancellation of a bond?

Facts.—No facts have been presented. However, an association of American importers requested the Customs Service to clarify the meaning of the word termination used in C.S.D. 79-392.

Law and Analysis.—The ruling in issue, C.S.D. 79-392, concerned the liability for duty on a consumption entry that may be charged against an entry bond.

The word termination is used in section 113.3, Customs Regulations (19 CFR 113.3). That section provides that both a principal and surety remain liable on a terminated bond for any obligation incurred before the bond was terminated. The phrase any obligation incurred simply refers to obligations such as the liability to pay duty on entered merchandise that is charged against a bond. Because liability for an existing obligation charged against a bond does not cease when the bond terminates, a district director is required by section 113.18, Customs Regulations (19 CFR 113.18), to retain the original of each bond approved by the District Director. The original copy is retained so that collection proceedings, including a suit on the bond, may be taken to collect any unsatisfied obligation incurred on a bond. Termination of a bond does not affect the ability of the Customs Service to file suit in order to enforce any obligated condition, including payment of duty due, of a bond.

The term cancellation if not synonymous with the term termination. Cancellation, which appears in sections 10.39, 113.51, 113.54, 113.55, 172.21, and 172.22, Customs Regulations (19 CFR 10.39, 113.51, 113.54, 113.55, 172.21 and 172.22), is used in the sense of annulment.

336-949 O - 81 - 3

That is, a claim based on a bond condition is wiped out. For example, 19 CFR 113.55(b)(2), permits cancellation by payment of liquidated damages of a bond given to guarantee exportation of an article that was temporarily imported under the provisions of schedule 8, part 5C, Tariff Schedule of the United States (TSUS) (19 U.S.C. 1202). On payment of those liquidated damages, the obligation to export ceases to exist.

Termination of a bond has no effect on any obligation charged against the bond before it was terminated. Termination of a bond simply means that a bond cannot be used to secure any obligation that may arise after termination; it has nothing to do with obligations charged against the bond before termination. One example, by no means an exclusive example, of a terminated bond is that of a term bond with an effective period of 1 year. After expiration of the 1-year period, the bond terminates; it cannot secure performance of any obligation that occurs after its expiration date. It seems beyond argument that the bond's termination does not cancel any liability charged against the bond before its termination; it merely means that the bond cannot be used to secure any new obligation.

Another example of termination is that discussed in C.S.D. 79-392: liability for duty on entry of merchandise secured by a bond. By statute, the liability for payment of all duty due on an entry is not fixed until the entry is liquidated. However, when an importer gives an entry bond to secure payment of that duty, an obligation against that bond is incurred, even though the final amount of duty due will not be fixed until liquidation. By givng the bond to guarantee future payment, the importer and surety promise to pay any lawful duty due when the amount of that duty is finally established, that is, when the entry is finally liquidated. Because of the possibility of a suspension of liquidation under section 504, Tariff Act of 1930, as amended (19 U.S.C. 1504), a voluntary reliquidation under section 501, Tariff Act of 1930, as amended (19 U.S.C. 1501), a protest under section 514, Tariff Act of 1930, as amended (19 U.S.C. 1514), an American manufacturer's petition under section 516, Tariff Act of 1930, as amended (19 U.S.C. 1516), or a reliquidation on account of fraud under section 521, Tariff Act of 1930, as amended (19 U.S.C. 1521), the actual amount of duty due may not be fixed for several years after the date of entry. Because there could be a change in the amount of duty due as a result of administrative or judicial action under any of those laws, the initial liquidation does not terminate the liability for payment until the time period for taking action under all of those laws expires.

For example, if the appropriate Customs officer liquidated an entry of merchandise for a certain amount, and then within the 2-year time

period under 19 U.S.C. 1521, there was a lawful reliquidation of that entry, the bond that secured the entry is liable for the payment of any additional duty due as a result of the reliquidation under 19 U.S.C. 1521. Thus, since the 2-year period under 19 U.S.C. 1521 establishes the last possible date for a change in the amount of duty due, the expiration of that period terminates liability for establishing the duty due. The termination of bond liability is wholly concerned with charging a future obligation against the bond; it has nothing to do with cancelling an existing liability charged against the bond. Such a termination and cancellation are two separate matters; they should not be confused.

A final question is whether termination of bond liability affects the operation of the statute of limitations set by 28 U.S.C. 2415. It does not. The statute of limitations does not begin to run until there is a breach of the bond. It is the breach which gives the right of action to sue on the bond. Thus, there may be a termination as to future liability before there is a breach of the bond as to a liability that was charged before termination. For example, there can be no breach of the bond obligation to pay the amount of liquidated duty due until the entry is finally liquidated by posting the notice of liquidation. Posting of the notice of liquidation is the demand for payment of those duties. If an obligor on the bond does not honor such a lawful demand for payment on a liquidated entry secured by the bond, there would be a breach of the bond that starts the running of the statute of limitations under 28 U.S.C. 2415 as of the time the demand was made, the date of liquidation. Unless a protest is allowed the duty is fixed and due as of the date of liquidation.

Moreover, Customs bonds that are acceptable as security for a consumption entry are conditioned on a promise to pay the full amount of duties found to be due on an entry up to the bond amount. Since bond liability for payment of duty on an entry charged against a bond is not terminated until the expiration of the 2-year period set by 19 U.S.C. 1521, payment of increased duties based on the initial liquidation does not preclude the assessment of additional duties as a result of a lawful reliquidation under 19 U.S.C. 1521 with respect to an entry charged against the bond. In such a circumstance, there is the possibility of two breaches of the bond: a failure to pay the amount based on the initial liquidation, and a failure to pay the amount based on the reliquidation under 19 U.S.C. 1521. Because two independent breaches would be involved, the running of the statute of limitations as to one breach has no connection to the running of the statute with respect to the second breach.

Conversely, since the amount of duty due on an entry may be changed until the expiration of the period set by 19 U.S.C. 1521, the

liability for that duty is not terminated until expiration of that period for a bond obligated to pay that duty.

Holding.—The ruling published as C.S.D. 79–392 simply discussed the termination of liability for the payment of duty on an entry secured by a bond. The ruling did not treat the term termination as being synonymous with the term cancellation with respect to bond liability. Finally, termination of bond liability has no direct connection with the statute of limitations since the running of limitations depends on when the bond was breached.

Effect on Other Rulings.—This ruling clarifies headquarters ruling BON–1–R:CD:D 210225 WR, dated April 19, 1979, distributed as legal determination 79–0288 and published in the Customs Bulletin as C.S.D. 79–392.

(C.S.D. 81–30)

Vessel Entrance: Foreign Vessels Arriving From Foreign or Domestic Ports

Date: May 22, 1980
File: VES–5–RRUCDC
104559 DR

To: District Director of Customs, Galveston, Tex.
From: Chief, Carrier Rulings Branch.
Subject: Apparent conflict between section 4.3(a), Customs Regulations, and title 19, United States Code, section 1435.

This is with reference to your memorandum ADM–9–03–G:DD of March 25, 1980, concerning the above-captioned subject regarding the entry of foreign vessels. You state that the part of section 4.3(a) which provides:

> * * * every foreign vessel arriving at a port in the United States from another such port or from a foreign port or place shall make entry at the customhouse within 48 hours after arrival.

conflicts with the provision of title 19, United States Code, section 1435, which states in part:

> The master of any foreign vessel arriving within the limits of any customs collection district shall within forty-eight hours thereafter, make entry at the customhouse * * *.

The language of the regulations was phrased to clarify the meaning of the statute, i.e., a foreign vessel must make entry regardless of whether the port it is arriving from is foreign or domestic, which is not the case with an American flag vessel. Although section 4.3(a) employs phraseology different from that of the statute, we do not perceive that it is in error.

You also point out that whereas section 4.3(a) states that a foreign vessel shall make entry at the customhouse within 48 hours, section 4.85(c) of the regulations requires a vessel on an inward movement with residue cargo to make entry at subsequent ports within 24 hours.

Section 4.85(c) is based on title 19, United States Code, section 1444, which requires the master of a foreign vessel arriving at subsequent ports to report the arrival of his vessel and produce the permit and a certified copy of the manifest within 24 hours. The difference between this procedure and the making of entry is that making entry requires, in addition, that the vessel's document be presented. As the burden of complying with this additional requirement at the same time is in most cases insignificant, and as compliance is of a benefit to Customs, section 4.85(c) was drafted to include this requirement as part of the residue cargo procedure.

Section 1444 of title 19 does not require the entry prescribed in section 1435, which is the entry addressed by section 4.3(a) of the regulations. Section 1444 is concerned with the timely presentation of a permit to proceed. There is no statutory authority for penalizing a vessel operator who presents the vessel's document after the 24-hour period for complying with section 1444, if presented within 48 hours of arrival. However, in view of the fact that the 24-hour requirement for entry prescribed in section 4.85(c) has been in the regulations for 65 years with no recorded objection from the carrier industry, we are of the opinion that an amendment is not warranted at this time.

(C.S.D. 81-31)

Containers: Foreign-Built Containers Unloaded in the U.S. and Used in Domestic Traffic Prior to Exportation

Date: May 30, 1980
File: BOR-7-07/BOR-8-04
RRUCDC
104579 DR

This is with reference to your letter of April 8, 1980, concerning the applicability of legal determination 3270-01 to proposed activities by your company in the domestic transportation of merchandise in containers which enter the country as instruments of international traffic.

The containers arrive in the United States with foreign merchandise and are transported to Marysville, Ohio, the place of destination, and unstuffed. You propose to then use some of the containers in domestic

traffic while en route from Marysville to either New York or Norfolk, where they would be loaded with export cargo. You also propose to transport some of the containers in domestic traffic to Houston, where the containers would be unstuffed, then reloaded with export cargo from Houston to a foreign port via a west coast port.

Legal determination 3270–01 is based on section 10.41a(f) of the Customs Regulations. Pursuant to subparagraph (2) of paragraph (f), a foreign container which enters the country duty-free in international traffic may be used in domestic traffic " * * * while en route from such point of destination of imported cargo [Marysville] to a point where export cargo is to be loaded [New York, Norfolk, Houston]," without becoming subject to duty.

Accordingly, the proposed use of containers as set forth in your letter would not be considered a diversion subjecting the containers to the assessment of duty.

(C.S.D. 81–32)

Drawback · Exportation of Aircraft by Entry into International Traffic

Date: June 4, 1980
File: DRA–1–RRUCDB
211733 NK

Issue.—Whether an aircraft manufactured in the United States is considered as exported for purposes of drawback and a temporary importation bond upon its original entry in international traffic under a foreign registry and its subsequent departure from this country in a revenue flight.

Facts.—An aircraft manufactured in the United States under drawback conditions and with parts imported under a temporary importation bond will be sold to a foreign airline. Upon delivery, the aircraft will enter international traffic under a foreign flag and registry and will depart from this country in a revenue flight.

Law and analysis.—Our ruling dated July 31, 1978 (209262), T.D. 78–288, concerned a foreign-owned aircraft that was used in international traffic and was imported temporarily under bond for major repairs. Upon reentering international traffic under a foreign flag and registry and subsequent departure from this country, we held that the aircraft was "exported" within the meaning of section 113.55(a) of the Customs Regulations for purposes of canceling the temporary importation bond. This ruling expressly overruled T.D. 54619(4) and T.D. 54619(6) which held that aircraft departing from this country in international traffic were not exported for purposes of canceling a bond for exportation.

The ruling of July 31, 1978, T.D. 78–288, applies to aircraft entering international traffic under a foreign flag that depart from this country empty or carrying cargo or passengers. Further, T.D. 78–288 is equally applicable to show exportation of an aircraft manufactured under drawback conditions.

Holding.—Upon compliance with applicable laws and regulations, an aircraft entering international traffic under a foreign flag and registry that subsequently departs from this country empty or in revenue service is exported for drawback and for the cancellation of a bond for export.

(C.S.D. 81–33)

Marking: Special Country of Origin Marking Requirements; Travel Clock Cases and Dials

Date: June 12, 1980
File: MAR–2–30:RRUEE
712955 JB

Issue.—What constitutes proper marking of imported travel clock cases and dials with folding outer cases to conform with special marking requirements if the dials are not marked on the faces to indicate the country of manufacture?

Facts.—The manually wound travel clocks are attached by interlocking hinges to an outer case measuring 3 by 3 by 1½ inches. The inner case of the clock is die-stamped on the outside of the back to indicate the name of the country of manufacture, "Hong Kong." A protrusion of the interlocking hinge where the hinge is attached to the inner case by a screw also indicates the country of manufacture. The outer folding case is not marked to indicate the country of manufacture.

The dial face is marked at the extreme lower portion of the face with the name of the country of manufacture. For future importations, however, the importer wishes to mark the dial in a location other than on the face of the dials.

Law and analysis.—Schedule 7, part 2, subpart E, headnote 4 (d) and (e), provide:

> 4. *Special marking requirements.*—Any movement, case, or dial provided for in this subpart, whether imported separately or attached to an article provided for in this subpart, shall not be permitted to be entered unless conspicuously and indelibly marked by cutting, die-sinking, engraving or stamping, as specified below:
>
> * * * * * * *
>
> (d) Clock cases and other cases provided for in this subpart shall be marked on the most visible part of the outside of

the back to show the name of the country of manufacture; and

(e) Dials shall be marked to show the name of the country of manufacture.

Headnote 4(e) was amended, as above, by section 510. The Trade Agreements Act of 1979, Public Law 96–39, enacted July 26, 1979, and effective January 1, 1980 (Pres. Proc. 4707). The effect of the amendment is to eliminate the previous requirement that dials be marked on the face when they are imported attached to any of the articles provided for in part 2E, schedule 7, TSUS. Consequently, imported dials may be marked on the reverse side of the dial or dial plate in satisfaction of the special marking requirements.

The inner clock case of the travel clock is properly marked to indicate the country of manufacture by the die-stamped legend "Hong Kong." As, however, outer cases for travel clocks are properly classifiable under item 720.33, TSUS, and are therefore subject to the provisions of headnote 4(d), schedule 7, part 2, subpart E, the outer cases must be marked on the most visible part of the outside of the back to show the name of the country of manufacture.

Holding.—Travel clocks with attached outer cases shall be marked on the most visible part of the outside of the back of the inner and outer cases to show the name of the country of manufacture. The dials are not required to be marked on their faces but may be marked on the reverse side of the dial or dial plate to show the country of manufacture. (Schedule 7, part 2, subpart E, headnote 4 (d) and (e), TSUS).

Effect of ruling.—This ruling, as it concerns special marking requirements of dials for clocks, applies to clocks or clock dials entered, or withdrawn from warehouse, for consumption on and after January 1, 1980.

(C.S.D. 81-34)

Carrier Control: Use of Non-Coastwise-Qualified Suction Dredges to Enlarge Navigation Channels

Date: June 23, 1980
File: VES–3/10–02
104493 MKT

This ruling concerns whether the use of two suction dredges, to enlarge navigation channels, and the use of a service barge, to transport and hold fuel for the dredges, would be considered to be coastwise trade within the meaning of title 46, United States Code, section 883.

Issues.—1. Whether the use of two non-coastwise-qualified suction dredges, to enlarge navigation channels, would be in violation of title 46, United States Code (U.S.C.), section 883?

2. Whether the use of a non-coastwise-qualified service barge, to transport fuel from shore to another coastwise point where the fuel will be transferred to the dredges, would be in violation of section 883 of title 46?

Facts.—Your client is the owner of two American-built, U.S.-flag dredges and a barge, all of which, for the purpose of this ruling, are assumed not to be entitled to the privileges of vessels employed in the coastwise trade. The dredges will be used to pump material from the sea floor to a spoil area on shore or to another water area 3,000 to 5,000 feet away from the dredge. The dredges will not carry any spoil. Only operational personnel or a maintenance crew will stay aboard the dredges when they are moved by tugs.

The barge will be used to store fuel for the dredges. It will load fuel at shore points and be moved to the dredges. The fuel will then be consumed aboard the dredges. We assume that all the operations of the dredges and barge will occur in U.S. territorial waters.

Law and analysis.—1. Title 46, United States Code (U.S.C.), section 883 prohibits the transportation of merchandise between points in the United States embraced within the coastwise laws or for any part of such transportation in a non-coastwise-qualified vessel. "Merchandise" includes goods, wares, or chattels of every description (19 U.S.C. 1401(c)).

The Customs Service has ruled that dredging is not coastwise trade. However, the transportation of dredged material may be considered to be coastwise trade. It is our opinion that if dredged material has no apparent value, will not be used in trade, and will be dumped at another point as worthless, the material would not be considered "merchandise" within the meaning of section 883. This position was recently upheld in *Great Lakes Dredge & Dock Co.* v. *Ludwig*, Civil No. 78–185 (W.D.N.Y. March 26, 1980). Furthermore, even if the spoil were considered to be "merchandise," the sole use of the dredge in effecting the movement of dredged material through a pipeline would not be considered a transportation of merchandise by the dredge between points in the United States.

When the dredge moves from one dredging site to another in U.S. waters, its movement will not be considered an engagement in the coastwise trade provided that the vessel carries no persons, other than the crew, and no supplies or materials, other than those belonging to the vessel itself.

2. The Customs Service has previously ruled that fuel carried on board a vessel would be considered "merchandise" within the meaning of section 883. Thus, if the barge transports fuel from one coastwise point to another (including a point within U.S. territorial waters) where the fuel is transferred to another vessel, a violation of section

336-949 O - 81 - 4

883 will occur. Violations of section 883 may result in the forfeiture of the merchandise or the assessment of a monetary amount equal to its value.

Holding.—1. The use of two non-coastwise-qualified suction dredges in U.S. territorial waters merely to effect the movement of dredged material through a pipeline and to transport no persons other than the crew, or supplies other than those of the vessel itself, would not violate section 883.

2. The use of a non-coastwise-qualified service barge, to transport fuel loaded at shore points to another coastwise point where the fuel will be transferred to another vessel would violate section 883.

Effect on other rulings.—This ruling follows Customs Service letter rulings VES–10–02–R:CD:C 101185 C, July 9, 1974; 101671 ML, October 7, 1976; 101289 PH, October 4, 1974; 102446 CR, December 7, 1976; 103692 MKT, December 28, 1978.

(C.S.D. 81–35)

Value: Effect of Further Processing Operations in Intermediate Country

Date: June 24, 1980
File: CLA–2:RRUCV
542130 RP

This is to clarify our letter of December 11, 1979, concerning the importation of seamless pipe from Japan.

In your letter to this office, dated September 25, 1979, you inquired whether ocean freight from Japan to Canada and rail freight from Canada to Alaska formed part of the dutiable value of the imported pipe. In addition, you asked whether certain coating and recrating charges incurred in Canada were dutiable charges. Your letter indicated that the pipe was to be sold on an f.o.b. Japanese port basis.

In our December 11, 1979, letter to you, we stated:

> * * * (I)t is our opinion in the instant case that the ocean and rail freight charges and the costs in Canada of coating and recrating incurred after the merchandise leaves the Japanese port do not form part of the dutiable value of the imported pipe.

We also held that:

> * * * since the merchandise in question is being shipped to the United States through an intermediate country (Canada), it becomes necessary to determine the "country of exportation." If the intermediate country is found to be the "country of exportation," certain costs incurred after shipment from the country of origin will be added to the value of the merchandise in order to

arrive at the appraised value of the imported merchandise in the intermediate country, e.g., the cost of transportation from the country of origin to the intermediate country * * *.

As a result of our December 11, 1979, letter, the national advisory import specialist in New York has informed us that the coating of the imported pipe in Canada is a process which must be performed in order to complete and render serviceable the product desired by the U.S. importer. We note that your original inquiry to this office did not include this information, and that our response was premised on the mistaken assumption that the coating process was incidental to the recrating and shipment of the imported pipe to Alaska.

In a telephone conversation with a member of my staff on May 13, 1980, you indicated that the coating operation was indeed to be a further processing of the pipe in Canada which would significantly add to the value of the pipe.

In view of the above, and in accordance with previous Customs rulings on the subject of further processing in intermediate countries, we are modifying our December 11, 1979, decision to the extent that the coating, packing, and freight (from Japan to the United States) charges in the instant case would form part of the dutiable value of the imported merchandise. It is settled that where merchandise is further processed or treated in an intermediate country, for appraisement purposes, the country of exportation is the intermediate country.

As per your telephone conversation with a member of my staff, we note that your client no longer intends to import the merchandise in the manner described above. The subject pipe is to be shipped directly to the United States, and the coating operation will be performed in this country.

Nevertheless, we are clarifying our December 11, 1979, decision to insure uniformity of appraisement in other import transactions of this nature which might occur.

(C.S.D. 81-36)

Duty Assessment: Determination of Appraised Value as Prerequisite for Filing American Manufacturer's Petition

Date: June 24, 1980
File: CLA-2:RRUCV
542095 JV

This is in response to your American Manufacturer's Petition, dated January 30, 1979, filed under 19 U.S.C. 1516 (a) and (b), on behalf of (name of American manufacturer), alleging that the appraised values

of tapered roller bearings and components manufactured in Japan by (foreign manufacturer No. 1) and (foreign manufacturer No. 2), are too low. (Published in the Federal Register, May 4, 1979 (44 F.R. 26233)).

The applicable statute, section 516, Tariff Act of 1930, as amended, provides in pertinent part for the filing of a petition with the Secretary if such American manufacturer believes that the appraised value of the imported merchandise is too low, setting forth that value.

The appraised value of which section 516 speaks is the appraised value which is determined by the appropriate Customs officer pursuant to section 500 of the Tariff Act of 1930, as amended (19 U.S.C. 500). Thus, appraised value is a term of art and is distinct from other kinds of functional values to which the Tariff Act refers, such as entered value. Section 489 of the Tariff Act, repealed by the Customs Simplification Act of 1953, contrasts the two; value in entry (section 487 of the Tariff Act, as amended); and dutiable value (section 503 of the Tariff Act of 1930, as amended), to mention a few.

Section 503, supra, crystallizes the point by providing "* * * the basis for the assessment of duties on imported merchandise * * * shall be the *appraised value determined upon liquidation*, in accordance with section 500 * * *". (Italic added). For additional commentary regarding appraised value see, for example, (1969) Senate Report No. 91-576 on S. 2624, which became the Customs Court and Administrative Act of 1970, at pages 23 et seq. See also, *Oxford University Press* v. *United States* (1952), 29 Cust. Ct. 191, 197.

That the term "appraised value" has the same meaning in section 516 as it has in section 503 is apparent from the context of each provision. Perhaps the clearest exposition of the proposition is found in the language of section 516(a) as it existed before its amendment in 1970. Under that version of 516, if the Secretary did not agree with the appraised value as reported to him by the appraiser, the Secretary was obliged to file an appeal for a reappraisement by the Customs Court, as then provided in section 501 of the Tariff Act, there being no administrative adjustment of appraised values then permitted by the Tariff Act.

No appraised value exists for entries of tapered roller bearings from Japan made in 1978 by the involved manufacturers. In fact, there have been no liquidations of such entries since at least 1972.

The best available information on appraised values as set forth in your petition does not reflect appraised values at all. Rather that information is derived from reports made in 1978 to the Bureau of the Census for statistical purposes pursuant to regulations, including those in 15 CFR 30.70. Doubtless the information is an accurate reflection of what it portrays. It does not, and could not as a matter

of fact and law, portray appraised values as that term is used in the context of section 516.

Until such appraised values are made pursuant to law with respect to the entri s in question, there is no basis in law for making the threshold determinations for which 516(b) provides. Consequently, since no appraised values exist here, there cannot as a matter of law be a petition filed pursuant to subsection (a) with respect to such values. Accordingly, your petition is dismissed as premature or as otherwise failing to meet the requirements of section 516 (a) and (b).

(C.S.D. 81-37)

Classification: Whether an Article is Ornamented in an Accepted Trade Sense

Date: July 2, 1979
File: CLA-2:R:CV:MC
060202/060203 BB

This ruling is in response to a request for reconsideration of Internal Advice (I/A) No. 10-78, filed by (name of law firm), on behalf of the (name of importer). The request was granted because our original response was issued without considering the additional evidence that counsel had sought to submit. The basis of the request for reconsideration is the belief that an established and uniform practice exists to classify the subject garments as not ornamented. On review of our decision in I/A No. 10-78, we decided not to limit ourselves to this issue, but to reconsider the entire matter.

Facts, Law and Analysis.—In our reply to I/A No. 10-78, dated December 19, 1978, headquarters took the position that a second row of stitching along the fold of a box pleat on the back of a raincoat constituted ornamentation for tariff purposes. The importer argues that an established and uniform practice exists to classify such raincoats as not ornamented. To support this argument, a number of previously imported raincoats with double stitching along the fold of a back pleat are submitted. All of these raincoats had been entered and liquidated as not ornamented. Headquarters conducted a survey of Customs districts and discovered that, although there is substantial sentiment for not considering the second row of stitching to be ornamentation, no established and uniform practice exists concerning the classification of such raincoats.

Notwithstanding the absence of an established and uniform practice to classify these raincoats as not ornamented, we have reviewed this matter and decided that our initial response to I/A No. 10-78 was inadequate because it did not deal with whether the presence

of the second row of stitching would actually influence a person's decision to buy the garment or would otherwise constitute ornamentation in an accepted trade sense.

The Customs Service follows the principles expressed in *Excelsior Import Associates Incorporated* v. *United States*, 79 Cust. Ct. 144, C.D. 4726 (1977), aff'd——CCPA——, C.A.D. 1212 (1978), and other cases which hold that in order to be ornamented for tariff purposes an article must be ornamented in an accepted trade sense. In no case, however, has the Customs court defined what constitutes an accepted trade sense. Therefore, the Customs Service is guided in this area by the decis on of the Court of Customs and Patent Appeals affirming the *Excelsior* case. In that ruling the court held that evidence concerning the fact consumers regard a certain feature as enhancing a garment's appearance was determinative of whether the garment was ornamented in an accepted trade sense.

There is neither evidence that consumers regard a second row of stitching along the fold of a box pleat on the back of a raincoat as enhancing the garment's appearance nor that the presence of the second row would influence their decision to buy the garment. We believe that consumers, when viewing the subject raincoat, would not consider the second row of stitching along the fold of the pleat to enhance the appearance of the garment.

Holding.—Based on the foregoing, we hold that the second row of stitching along the fold of the box pleat of the subject raincoat does not constitute ornamentation for tariff purposes.

In accordance with section 177.9(d), Customs Regulations (19 CFR 177.9(d)), the holding in I/A 10–78 is revoked and the holding in this memorandum is substituted therefor.

A copy of this ruling should be furnished to the importer's representative.

(C.S.D. 81-38)

Instruments of International Traffic: Radioactive Isotope Containers

Date: July 3, 1980
File: BOR-7-07-RRUCDC
104639 MJP

This ruling concerns the classification of model 650 source-changer containers as instruments of international traffic.

Issue.—Whether model 650 source-changer containers used in the transportation of radioactive isotopes may be classified as instruments of international traffic within the meaning of section 322(a), Tariff Act of 1930, as amended 19 U.S.C. 1322(a).

Facts.—The containers are made of a welded steel housing enclosing a uranium shield inside measuring 14 inches high and 10 inches in diameter. Each container has a metal tag riveted into the wide side stating the name of the manufacturer, the DOT classification, and a serial number. There are approximately 250 containers used in this service with a life span of 10 to 20 years. These containers will be entering through the ports of New York, Boston, San Francisco, and Miami.

Law and Analysis.—To qualify as an instrument of international traffic within the meaning of 19 U.S.C. 1322(a), an article must be used as a container or holder. Further, the article must be substantial, must be suitable for and capable of repeated use and must be used in significant numbers in international traffic.

The Customs Service has previously designated (TD 56343) containers, steel jacketed, with paraffin cores or with lead cores or shields, specially designed for use in the transportation of radioactive materials, as instruments of international traffic. The source changers in the present case are substantial, capable of repeated use and will be used in significant numbers and in a similar manner to those described in T.D. 56343.

Holding.—The model 650 source changer is similar to the cylinders discussed in T.D. 56343 and therefore may be released in accordance with the procedures set forth in section 10.41a, Customs Regulations.

(C.S.D. 81-39)

Classification: Exterior Wall Finishes; Application of Similitude Clause in Item 798.00, TSUS

Date: July 11, 1980
File: CLA-2:RRUCGC
061872 JH

Issue.—Whether certain wall coverings are classifiable as paint in item 474.30, Tariff Schedules of the United States (TSUS), or plastics material in item 445.05, TSUS, or by use of the similitude provision in item 798.00, TSUS, classifiable as paint in item 474.30, TSUS.

Facts.—The products, which are made in Italy, are designed to provide various types of mastic finishes for exterior walls.

Compo's Settef finishes are described as waterproof self-bonding synthetic coatings which are usually applied by trowel. The three finishes listed were:

Fless Coat, said to be a coarse paste, aqueous dispersion composed of approximately 90 percent coarsely ground limestone and mica, and a 10-percent nonbenzenoid synthetic plastics material (polyethyl

acetate). Due to its high plasticity, it is said to provide better cover. Fless coat is described as being applied by a trowel or a spray. Only 9 percent of the particulate matter passed through a 325 mesh.

Rivoland is said to be a multicolored, pebble-texture finish composed of acrylate-emulsion resins and washed-marble aggregates. A sample is described as an aqueous dispersion containing essentially calcium carbonate (limestone) in a nonbenzenoid-synthetic plastics material. material. Only 12 percent of the particulate passed through a 325 mesh.

Daub-Big, a thick, heavily textured wall facing of essentially limestone and silica in an aqueous dispersion of a nonbenzenoid-plastics material. Only 14 percent of the particulate passes through a 325 mesh.

Law and analysis.—Headnote 2, subpart 9C, schedule 4, TSUS, states that the term paints and enamel paints covers dispersions of pigments or pigment-like materials with a liquid (vehicle) which are suitable for application to surfaces as a thin layer * * *.

These products do not satisfy that definition. They are not applied to surfaces in layers as thin as ordinary paints, nor do they harden to an opaque, solid film.

However, in behalf of the importer, it is urged that by virtue of the similitude clause, item 798.00, TSUS, the products should be classified as paints. Item 798.00, TSUS, covers any article not provided for elsewhere in these schedules which is similar in the use to which it may be applied to any article or articles enumerated in any of the dutiable provisions of the schedules.

Primary element of resemblance for similitude purposes is the use to which it is applied, and resemblance of material is to be resorted to only if there is an equal resemblance in the use to which the non-enumerated article and enumerated article may be applied. *Dynamic Imports Inc.* v. *United States* (C.D. 3674).

These products are not paints but are used for the same purposes as paints—i.e., to provide a decorative and protective finish. The laboratory evaluation describes them as being aqueous dispersions, even the one said to be a coarse paste. Accordingly, in view of the similar use, and constituent elements, which are related to the headnote requirements: Some liquid present and if not containing a pigment material, a pigment substitute is present, and the products not being covered by any dutiable enumerated provision, the products may be classified by virtue of the similitude provision.

Holding.—Exterior wall covering material consisting of an aggregate material (usually coarsely ground limestone or marble) with a non-benzenoid-plastic material, the products described as being in an aqueous dispersion, are classifiable by virtue of the similitude provision in item 798.00, TSUS, to the enumerated dutiable article which they most resemble as to use, in item 474.30, TSUS, paints not containing titanium pigments, dutiable at 4 percent ad valorem.

(C.S.D. 81-40)

Entry: Whether a Parent Corporation May Enter Merchandise Consigned to Its Subsidiary

Date: July 15, 1980
File: ENT-1-01:RRUEE
713285 BM

This ruling concerns the activity a parent corporation may perform for a subsidiary concerning the entry of the subsidiary's merchandise when the two corporations are separate legal entities.

Issue.—May a parent corporation enter the merchandise consigned to its subsidiary when the two corporations are separate legal entities?

Facts.—A parent corporation (designated in this ruling as corporation A) seeks permission to execute entries for merchandise consigned to its wholly-owned subsidiary (designated in this ruling as corporation B). Corporation A is aware of ORR ruling 302658 BM dated August 12, 1975, whereby Customs ruled that under such circumstances that the parent corporation could not enter merchandise consigned to its subsidiary because: (1) The goods were consigned to the subsidiary, and (2) the two corporations were each incorporated and were thus separate legal entities. However, corporation A seeks an exception to ORR ruling 302658 BM because corporation B, although a separate legal entity, has only a marketing and sales division, and corporation A is performing all administrative and accounting functions for both corporations.

Law and Analysis.—Basically, 19 U.S.C. 1483, 1484, and 1485 permit the consignee or its agent to enter the consignee's merchandise. 19 U.S.C. 1641(a) provides in pertinent part that, "no person shall transact business as a customhouse broker without a license granted in accordance with the provisions of this subdivision, but nothing in this section shall be construed to authorize the requiring of a license in the case of any person transacting at a customhouse business pertaining to his own importations."

Since both corporations A and B are separate legal entities, we believe that ORR ruling 302658 BM applies and that corporation A may not enter merchandise consigned to corporation B. Otherwise to permit corporation A to do so would be to permit it to act as a customhouse broker, since it is not the consignee of the merchandise.

However, ORR ruling 302658 BM would not prevent corporation A from preparing the entry for corporation B and corporation B from filing the entry in its name. Corporation B by the signature of its corporate officer or employee on the entry would be acknowledging the entry as its own. As indicated in ORR ruling 302658 BM, an

336-949 O - 81 - 5

officer of both corporations could file an entry on behalf of corporation B, provided he was doing so in his capacity as an officer of corporation B. If an employee who is employed by both corporations, but not as an officer desires to enter the merchandise for corporation B, it would be necessary that a power of attorney be filed with Customs. Furthermore, such power of attorney should state that this employee is an employee of corporation B and has the authority to file entries in corporation B's behalf.

In addition, corporation A may submit its check for payment of the duties involved along with corporation B's entry. Although corporation B is the person liable for the payment of the duties, there is no prohibition against someone else paying its duties. If it determined that any supplemental duties are due, Customs would notify corporation B since that corporation is primarily liable for the payment of such duties. However, corporation A would not be precluded from paying such supplemental duties, provided it enclosed with its payment a copy of the bill which was sent to corporation B.

Any refund of excessive duties deposited would be made out in accordance with section 24.36, Customs Regulations, to the importer of record, who would be in this case the subsidiary (corporation B). The parent company could file Customs form 4811 and have the refund sent to it, but such refund would be made out to the subsidiary.

Holding.—A parent corporation may not make entry for merchandise consigned to its subsidiary when both corporations are separate legal entities. However, the parent corporation is not precluded from preparing for corporation B such entries which are filed by corporation B in its own name. Corporation A would not be precluded from paying the duties for such entries.

(C.S.D. 81–41)

Appeals and Protests: Timeliness of Protest; Bulletin Notice of Liquidation

Date: July 15, 1980
File: LIQ–8–01 RRUEE/RRUCGC
712994 M/C

This ruling concerns the timeliness of a protest.

Fact.—Certain ladies' slippers were entered under two entries dated April 12, 1978, and May 18, 1979. Customs appraised the shoes on the basis of the American selling price of similar domestically produced ladies' slippers, resulting in a substantial increase in the

value of the shoes, and an increase in Customs duties of about $39,000. The importer indicated by telephone that he intended to protest the Customs decision since he felt the shoes used for comparison purposes by Customs were not similar to the imported shoes.

The entries were liquidated on November 17, 1978, and a bulletin notice of liquidation posted in accordance with section 159.9, Customs Regulations. Due to certain changes that were being implemented with respect to the automated accounting system at the time, however, the bill for additional duties was not sent out until January 19, 1979. Normally, the bill would have been sent out on the same date as the date of liquidation and the date of the bill would have reflected the date of liquidation. The importer contends that in these circumstances the date of the bill for additional duties should be considered the date of liquidation, and, accordingly, his protest filed on March 26, 1979, and an amendment thereto filed on April 19, 1979, should be deemed to have been timely filed within 90 days of the notice of liquidation, as required by 19 U.S.C. 1514.

Issue.—1. Was a timely protest filed?

2. Are the imported ladies' slippers legally similar for ASP purposes to the domestically produced ladies' slippers used by Customs for comparison purposes?

Law and analysis.—19 U.S.C. 1514(b)(2)(A), in pertinent part, states that a protest must be filed within 90 days after but not before the notice of liquidation. 19 U.S.C. 1500(e) provides that the notice of liquidation shall be given in the form and manner as prescribed by the Secretary of the Treasury. Section 159.9 of the Customs Regulations (19 CFR 159.9), indicates that the notice of liquidation shall be made on a bulletin notice of liquidation, which shall be posted in the customhouse at the port of entry, and that the date of liquidation is the date the bulletin notice is posted in the customhouse. This section also provides that the entries for which the bulletin notice of liquidation has been prepared shall be stamped "Liquidated," with the date of liquidation, which shall be the same as the date of the bulletin notice of liquidation. Such stamping shall be deemed the legal evidence of liquidation.

Customs normally forwards to the importer, prior to posting the bulletin notice of liquidation, a courtesy notice of liquidation which informs the importer of the pending liquidation. The Customs court in *Reliable Chemical Company* v. *United States* (C.R.D. 78–11), decided on July 26, 1978, stated that the courtesy notice as constituted at that time is more than a courtesy notice of liquidation, but in fact constitutes a direct, formal and decisive notice of liquidation and can be protested. The court also suggested the manner in which

the courtesy notice could be modified so that it would be a true courtesy notice of liquidation.

ORR ruling 79–0094, issued on April 16, 1979, concerned a situation whereby Customs at Philadelphia sent out a bill which was to serve as the courtesy notice. Unfortunately, this bill was sent to the wrong party. In view of the Customs court decision in C.R.D. 78–11, it was decided that the importer did not receive proper notice of liquidation in accordance with the *Reliable Chemical Company* case. It was noted that "Customs is presently revising the courtesy notice of liquidation in accordance with the prerequisites of the court decision so that in the future the bulletin notice of liquidation will once again serve as the only valid notice of liquidation." ORR ruling 79–0094 could be construed as a ruling that either a courtesy notice or a bill for additional duty must be sent in order to accomplish liquidation.

Subsequent to this ruling, the Court of Customs and Patent Appeals in *United States* v. *Reliable Chemical Company*, C.A.D. 1232, decided on September 13, 1979, reversed the Customs court, and held that the regulations promulgated by the U.S. Customs Service pursuant to statutory authority provided that the bulletin notice of liquidation is the only valid notice of liquidation. Therefore, even though the importer may have been misled by the issuance of the courtesy notice, and that may be questionable, the Customs court's apparent reliance on equitable estoppel was misplaced, since equitable estoppel is not available against the Government in cases involving the collection or refund of duties on imports.

In the present case, the date of the bulletin notice of liquidation was November 17, 1978, which is the date of liquidation, rather than the date of the bill, which was January 19, 1979. Accordingly, the protest was not timely filed within 90 days of the notice of liquidation.

Since the Court of Customs and Patent Appeals in the *Reliable Chemical Company* case has upheld the bulletin notice of liquidation, we believe that any protest permitted under ORR ruling 79–0094 and not finally decided must be rejected as untimely filed. Because ORR ruling 79–0094 is contrary to case law, including the *Reliable Chemical Company* case, as well as Customs Regulations, ORR ruling 79–0094 is hereby revoked.

We note that even if the protests had been considered to be timely filed, the protests would have been denied on the merits in this case. In view of our ruling, however, it is not necessary to consider the merits of the protest.

Holding.—The protest involved was not timely filed. (See *United States* v. *Reliable Chemical Company*, C.A.D. 1232.) ORR ruling 79–0094 is hereby revoked. The protest is denied as untimely filed.

(C.S.D. 81–42)

Drawback: 'Appearing In" Method as Basis for Claim; Records of Waste

Date: July 23, 1980
File: DRA-1-09-RRUCDB B
211713

Issue.—In using the blanket identification method for designation set out in section 22.4(f) of the Customs Regulations, must allowance for waste be made when the claimant uses the appearing in method as the basis for drawback?

Facts.—A drawback claimant under 1313(a) uses blanket identification under section 22.4(f) of the regulations and the appearing-in method for basing his claims. A question has arisen whether in designating by the blanket method, the claimant must add the wastage to those units appearing in the exported products, not for purposes of drawback, but for accountability. For example, 800 units appear in the exported products, and 200 units are lost as waste during production. Does the claimant designate 800 units for drawback, or 1,000 units, writing off the additional 200 units lost as waste. In either case, drawback is limited to the amount of duty paid on 800 units.

Law and Analysis.—Under the provisions of section 22.4(f) of the regulations, designated merchandise is charged off against entries on a low-to-high basis. That is, the claimant is required to designate that entry having the lowest dutiable value, rate of duty, or drawback allowance until the entire entry is charged off. Subsequent exports are charged off to the entry having the next higher dutiable value, and so on.

Claimants using the appearing in method as a basis for their claims automatically limit themselves to drawback based on the number of designated units or amount of designated merchandise which appear in the exported products. Section 22.4(a) of the regulations allows Customs to waive the requirement that waste records be kept, and the claimant then effectively waives his right to claim drawback on merchandise used in production but not appearing in the exported product.

In no drawback claim based on the appearing-in method can more merchandise than appears in the exported products be designated for drawback. The regulations do not contain any provision for designation of a waste factor to be added to the merchandise appearing in the exported products even if drawback is not paid on the waste factor. Further, the amount of drawback paid in these cases

is limited to the duty paid on the designated merchandise up to the number of designated units or designated amount of merchandise appearing in the exported products. For these reasons, if the entry having the lowest dutiable value, etc. covers 1,000 units, and only 800 units appear in the exported products, 800 units of that lowest entry are the maximum which can be designated. The remaining 200 units of that lowest dutiable value entry must be designated for drawback on the next exportation or exportations upon which drawback is claimed.

Holding.—If a claimant using the appearing-in method chooses to designate by blanket designation under section 22.4(f) of the Customs Regulations, it is unnecessary to keep records of waste, as no allowance is made for waste in computing drawback.

(C.S.D. 81–43)

Containers: Permitted Domestic Movements of Foreign Containers; Section 10.41a, Customs Regulations

Date: July 29, 1980
File: BOR-7-07-RRUCDC
104503/104193 RB

This ruling concerns movements of containers of foreign origin admitted as instruments of international traffic.

Issue.—Whether various movements of containers of foreign origin admitted as instruments of international traffic would be considered diversions with'n the purview of section 10.41a, Customs Regulations (19 CFR 10.41a).

Facts.—(U.S. corporation) has purchased, or is in the process of purchasing, 3,600 40-foot containers manufactured by (foreign corporation). (U.S. corporation) contemplates using these containers to ship goods between the Far East and the United States, and Europe and the United States. (U.S. corporation) states that the containers would not be used in domestic traffic precluded by section 10.41a. However, the inquirer requests our comments as to the applicability of section 10.41a to the following movements of containers of foreign origin:

1a. Containers loaded with imported cargo would be shipped to U.S. ports and then transported from the port of arrival to the point of destination of the imported cargo.

1b. While en route to such point of destination, some of the containers may be employed in picking up and delivering domestic loads at intervening points between the port of arrival and the point of destination of the imported cargo.

1c. After arrival at the point of destination, the containers would be emptied and some reloaded with either export or domestic cargo. The remaining containers would be conveyed empty to a loading area somewhere close to the destination point for a similar pickup of either export or domestic cargo. In this regard, it is stated that the containers loaded or to be loaded with domestic or export cargo either at the destination point or at the nearby loading area, respectively, would be transported along a reasonably direct line between the point of destination of the imported cargo and the exterior port of departure. Upon arrival at the exterior port of departure, the containers, either empty or loaded with export cargo, would thereafter be shipped abroad.

2. A container may arrive empty from a foreign port at a domestic port and then be moved to a place of loading inland, such loading being of export cargo. The container would then be moved to a port of departure and shipped to a foreign port.

3. A container may arrive empty at a domestic port and be loaded with domestic cargo and shipped to a point of unloading on the way to a place of loading of export cargo at which point the container would continue on to a port of departure and out.

4. A container loaded with imported cargo would arrive at an east coast port, be unloaded, then loaded with domestic cargo and shipped via water to a west coast port for positioning for a foreign move. The container would then be unloaded, loaded with export cargo, and shipped to a foreign port.

5. A similar fact situation as stated in item 4 except that the container would arrive on the west coast.

6. A container loaded with imported cargo would arrive on either coast and then be unloaded and the container shipped empty to the other coast for positioning for loading with export cargo and direct shipment to a foreign port.

Law and Analysis.—Section 10.41a, Customs Regulations (19 CFR 10.41a), states that a container is considered to be engaged in international traffic when it arrives in the United States with cargo for delivery in the United States, or arrives empty to load cargo for foreign destinations. A container engaged in international traffic may be admitted without entry or payment of duty upon compliance with section 10.41a, but becomes subject to treatment as imported merchandise requiring the filing of a regular Customs entry and payment of applicable duties if withdrawn from international traffic.

Section 10.41a(f) permits a container of foreign origin admitted as as instrument of international traffic to engage in point-to-point local traffic while en route between the port of arrival and the point of destination of its imported cargo, or while en route from such point of destination to a point where export cargo is to be loaded or to an exterior port of departure by a reasonably direct route to, or nearer to, the place of such loading or departure, provided the local traffic is incidental to the efficient and economical utilization of the container in the course of its use in international traffic. A container of foreign origin arriving empty may transport goods between points in the United States while en

route between the port of arrival and the point where export cargo is to be loaded, or from that point to an exterior port of departure, by a reasonably direct route to, or nearer to, the place of such loading or departure, provided such point-to-point traffic is incidental to the economical and efficient utilization of the container in the course of its use in international traffic.

If a container of foreign origin being used in permitted domestic traffic under section 10.41a(f) is diverted to point-to-point local traffic which is not incidental to the container's use in international traffic, or if the container is otherwise withdrawn in the United States from its use as an instrument of international traffic, it becomes subject to entry and payment of any applicable duties. For failure to report promptly such a diversion or withdrawal or promptly to make the required entry and payment of duties, liquidated damages in an amount equal to the domestic value of the container are incurred under the Bond for Control of Certain Instruments of International Traffic (Customs form 7587) and, in appropriate cases, penalties may be incurred under title 19, United States Code, section 1592.

Additionally, as concerns the shipment of containerized merchandise by water, it should be noted that title 46, United States Code, section 883, in general precludes the transportation of merchandise between points in the United States by vessels other than coastwise-qualified vessels (i.e., those built in the United States, owned by citizens of the United States, and documented under the laws of the United States). However, this prohibition does not apply to empty containers meeting the requirements of section 4.93, Customs Regulations.

Holdings.—1a. There would be no violation of section 10.41a, Customs Regulations, if the containers arrived loaded with cargo destined to the United States, or if they arrived empty to be loaded with export cargo.

1b. As concerns the use of the containers of foreign origin in domestic traffic while en route from the port of arrival to the interior point of destination of the imported cargo, there would be no violation of section 10.41a or 10.41a(f) provided the use of the containers in picking up and delivering the domestic loads at intervening points between the port of arrival and the point of destination is incidental to the efficient and economical use of the containers in international traffic.

1c. As concerns the use of the containers of foreign origin in domestic traffic between the point of destination and either a point where export cargo is to be loaded or an exterior port of departure, there would be no violation of section 10.41a or 10.41a(f) provided that the use of the containers in such domestic traffic occurs along a reasonably direct route from the point of destination to, or nearer to, the place of such loading or departure, and provided further that such use is

incidental to the efficient and economical use of the containers in international traffic.

2. There would be no violation of section 10.41a or 10.41a(f) provided a container of foreign origin arrives empty, loads export cargo at an inland point, and thereafter is transported directly to an exterior port of departure for shipment abroad.

3. There would be no violation of section 10.41a or 10.41a(f) provided while en route from the port of arrival to a point where export cargo is to be loaded, a container of foreign origin is used in domestic traffic only along a reasonably direct route from the port of arrival to the point of such loading, and provided further that the domestic use of the container as described is incidental to its efficient and economical use in international traffic.

4. There would be no violation of section 10.41a or 10.41a(f) provided the container of foreign origin discharges imported cargo at a port of arrival (the point of destination of the imported cargo) and there loads domestic cargo for direct shipment to and discharge at a port of departure where the container ultimately loads export cargo for shipment abroad. In this context, the domestic use of the container as described would be merely incidental to its use in international traffic. However, because the contemplated movement occurs over water between points on the East and West Coasts of the United States, it is subject to 46 U.S.C. 883, which prohibits the transportation of merchandise between points in the United States embraced within the coastwise laws in any vessel other than a coastwise-qualified vessel.

5. Same as item 4.

6. There would be no violation of section 10.41a or 10.41a(f) provided that the container discharges imported cargo at a port of arrival (the point of destination of the imported cargo) and thereafter is shipped empty to a port of departure on the opposite coast where it is loaded with export cargo for shipment abroad.

(C.S.D. 81-44)

Drawback: Effect of Machining/Threading of Stainless Steel Fittings in Foreign-Trade Zone; Country of Origin Marking Requirements

Date: August 4, 1980
File: DRA-1-09-RRUCDB B 211326

Issues.—1. Is machining and threading stainless steel fittings manufacturing for purposes of the drawback law (section 1313, title 19, United States Code)?

2. Is manufacturing in a foreign-trade zone manufacturing in the United States for purposes of the drawback law?

3. Is the machining and threading of stainless steel fittings an operation which renders the fittings products of the United States if performed in the Customs territory or products of the foreign-trade zone if performed in the foreign-trade zone?

Facts.—A company located in a foreign-trade zone plans to import totally unmachined stainless steel fittings. The fittings are to be machined to ASTM-A, B-16.2 thread specifications in the following manner:

A. The fittings are aligned in a lathe chuck to run true and concentric. This is done by locating the unmachined fittings in a four-jaw chuck specially designed for that size and configuration. Precision instruments are then used to zero-in the fitting to run true and concentric.

B. The thread pad area is bored and tapered in preparation for threading. The thread pad area is thereby made concave.

C. The inside diameter leading edge is champfered to prepare for threading.

D. The prepared opening is threaded to a specific depth and thread numbers to meet the requirements of A.S.T.M.-A. B-16.2 which allows a thread tolerance of plus or minus one thread. The fitting must also meet the 90-degree right angle requirement, which dictates one-half degree tolerance. Should any specification not be met, the fitting is scrapped.

E. The leading band edge and side are surface-machined to produce a perfect vertical position which produces a flat sruface.

F. The surfaces developed in step E are then polished for cosmetic purposes.

Procedures A through F are repeated depending upon whether the fitting has two, three, or four openings.

Law and Analysis.—The Supreme Court has stated that for a process to be manufacturing a new and different article must emerge, having a different name, character, or use. A detailed discussion of what constitutes manufacturing for drawback purposes is contained in C.S.D. 79-339. Suffice it to say here that the machining and threading of stainless steel fittings complies with the Supreme Court definition and consttutes manufacturing for drawback purposes.

Foreign-trade zones of the United States are located in the United States even though they are not within the Customs territory of the United States. Therefore, manufacturing performed within a foreign-trade zone is manufacturing in the United States for purposes of the drawback law.

Whether the operations are performed in a trade zone in the United States or in the Customs territory of the United States is irrelevant and drawback may be had on any exported fittings on which duty was paid. All imported fittings need not be exported to claim drawback.

The fittings are somewhat identical before and after machining, except that after the above-described procedures, the finished fitting has two threaded and polished openings and one unthreaded, polished opening. Both the unfinished and the finished fitting would be classifiable under the same provision of the tariff schedules as dictated by general headnote 10(h) of the Tariff Schedules of the United States.

Further work or material added to these fittings in the United States must effect a substantial transformation in order to render them products of the United States (19 CFR 134.1(b)). We believe the work performed in the United States renders the fittings products of this country (see *Midwood Industries, Inc.* v. *United States*, 64 Cust. Ct. 499, C.D. 4026 (1970)). Accordingly, the finished fittings will not be required to be marked to indicate the country of origin of the castings if they are withdrawn from the zone for consumption in the United States. The Customs Service, however, cannot approve the marking "Made in U.S.A." on the finished fittings. This is a matter that comes under the jurisdiction of the Federal Trade Commission.

Holdings.—1. The above-described operations together meet the definition of manufacturing for purposes of the manufacturing drawback law.

2. Manufacturing in a foreign-trade zone in the United States is manufacturing in the United States for purposes of the drawback law.

3. The operations, whether performed in a trade zone in the United States or in the Customs territory of the United States, constitute a substantial transformation, exempting the fittings from marking to indicate country of origin. We cannot approve the marking "Made in U.S.A." on the finished fittings, a matter under the jurisdiction of the Federal Trade Commission.

(C.S.D. 81–45)

Collections and Refunds: Tonnage Tax and Light Money Paid on Vessel Exempt From Such Payments

Date: August 5, 1980
File: VES–11–11/VES–11–13
104797 PH RRUCDC
104400

This ruling concerns an application for the refund of special tonnage tax and light money paid on the undocumented barge Tekko Maru No. 1 and revokes ruling No. 104400 dated January 25, 1980.

Issue.—Whether a refund of special tonnage tax and light money is warranted for a barge owned by a Japanese owner under tow by a Japanese tug when the barge does not have a certificate of nationality because the Japanese government does not issue certificates of nationality to non-self-propelled vessels such as the barge.

Facts.—On October 7, 1979, the barge Tekko Maru No. 1 (barge) was entered at Mobile, Alabama, from Niihana, Japan. The barge was under tow by the tug *Kobe Maru* (tug). Because no vessel document was presented for the barge, special tonnage tax and light money in the amount of $6,120 was paid by (name of U.S. agent), agent for (name of foreign company), owner of the barge.

By letter dated November 20, 1979, the agent applied for refund of the subject special tonnage tax and light money. With the letter the agent transmitted: (1) An application by the owner of the barge to the Chugoku District Maritime Bureau for a certificate that Japan does not issue certificates of nationality for non-self-propelled barges; (2) A statement that the Japanese Government does not issue a certificate of vessel's nationality to a ship which is a dead barge and only can be moved by towing, signed by the director of the Chugoku District Maritime Bureau; and (3) A certificate by the Japanese Ambassador to the Republic of Singapore that the barge is unable to sail by herself because she has no engine and, therefore, is not classified as a ship according to the provisions of Japanese ship law and, further, that no nationality is issued to barges of this type. Subsequently, the agent transmitted a document certifying that Japan recognizes the barge as being of Japanese nationality. Also, Customs received a letter from the Department of State stating that it had been informed that no certificates of nationality are issued by the Japanese Government to non-self-propelled barges.

Law and Analysis.—Under title 46, United States Code, section 8, special tonnage tax and light money may be refunded if application therefor is made within one year from the date of payment and if it is found that the charge was illegally, improperly, or excessively imposed. Pursuant to section 4.24(e), Customs Regulations, the application for refund must include a certificate by the vessel owner or his agent that payment of tonnage tax at the applicable rate has been or will be made for each entry of the vessel on a voyage on which that rate is applicable before the end of the current tonnage year.

Under title 46, United States Code, sections 121 and 128, special tonnage tax in the amount of 50 cents per ton and light money in the amount of 50 cents per ton are to be assessed on vessels not built in the United States and not of the United States. However, pursuant to title 46, United States Code, section 141, upon satisfactory proof that no discriminating duties of tonnage or imposts are imposed in

the ports of another nation upon United States vessels, "***foreign discriminating duties of tonnage and impost within the United States [may be] suspended and discontinued, so far as respects the vessels of such foreign nation***." The nations, vessels of which are exempt from special tonnage tax and light money, are listed in section 4.22, Customs Regulations. Japan is among those nations.

Generally, an undocumented foreign vessel is subject to special tonnage tax and light money (ruling letters MA 214.1E, August 31, 1964, and VES-11-11-R:CD:C 103705 CH, November 22, 1978). In almost every situation involving verifying a vessel's nationality, the Customs Service has required evidence in the form of a vessel document. However, as a matter of law, we cannot require the submission of something which does not exist. In this instance, we have satisfactory evidence that the vessel under consideration is of a nation the vessels of which are exempt from special tonnage tax and light money and that nation does not provide certificates of nationality for the special category of vessels (non-self-propelled barges) to which the vessel belongs. It is our conclusion, therefore, that special tonnage tax and light money collected for the barge should be refunded in accordance with the provisions of section 4.24, Customs Regulations.

Holding.—Refund is warranted of special tonnage tax and light money paid for a non-self-propelled barge owned by a Japanese owner and under tow by a Japanese tug when the barge does not have a certificate of nationality because satisfactory evidence of the vessel's nationality and that the Japanese government does not issue certificates of nationality to such vessels has been presented to Customs.

(C.S.D. 81-46)

Carrier Control: Movement of Dredged Material Through Floating Pipeline; 46 U.S.C. 292

Date: August 8, 1980
File: VES-10-02: RRUCDC 104811 PH

Reurtel 8-01-80 in which you request clarification of ruling letter VES-10-02-RRUCDC 104541 PH, 5-28-80. Assuming same facts in our ruling letter 104541, you ask if movement of dredged material through floating pipeline from foreign-built dredge outside U.S. territorial waters to island or landfill located within U.S. territorial waters would be permissible under 46 U.S.C. 292.

In ruling letter 104541 we held that a foreign-built dredge may be used, outside U.S. territorial waters, to dredge material to be used

336-949 0 - 81 - 6

for landfill purposes from the seabed without violating 46 U.S.C. 292 and that the dredged material may be moved, by means of a floating pipeline, from the dredge to the landfill or island whether or not the landfill or island is within U.S. territorial waters, without violating 46 U.S.C. 883. Your letter of March 19, 1980, to which our ruling letter 104541 responded, stated that the dredged material will be pumped from the dredge through a floating pipe extending from the deck of the vessel to an island or landfill being created offshore by the accumulation of the dredge material. We have ruled that dredging generally means the use of a vessel equipped with excavating machinery in digging up or otherwise removing submarine material. In our opinion, movement of dredged material through a floating pipeline is not dredging. (Ruling letter VES-10-R:CD:C 101751 R, 9-18-75.)

Accordingly, movement of dredged material through floating pipeline from foreign-built dredge outside U.S. territorial waters to island or landfill located within U.S. territorial waters would not violate 46 U.S.C. 292.

(C.S.D. 81-47)

Drawback: Effect of Pre-Entry Examination of Merchandise on Claims Under 19 U.S.C. 1313(c)

Date: August 20, 1980
File: DRA-1-RRUCDB
211820 WR

Issue.—Whether the examination of merchandise by an importer or an agent of the importer before entry precludes allowance of drawback under section 313(c), Tariff Act of 1930, as amended (19 U.S.C. 1313(c)) if, after entry, the importer claims that the merchandise failed to meet specifications?

Facts.—The inquirer posed a number of hypothetical situations. The first situation was whether the type of merchandise examined would affect the allowance of a claim under 19 U.S.C. 1313(c). All other situations involved varying degrees of examination overseas by agents or employees of the importer.

Law and analysis.—Customs Service Decision 79-367 (C.S.D. 79-367) held that an importer who examined diamonds in a bonded warehouse before entry was not entitled to drawback under 19 U.S.C. 1313(c) on the basis that the diamonds did not conform to specification. An importer must show that the merchandise did not conform to specification within the allowable time period. In the ruling, published as C.S.D. 79-367, the action of the importer in examining the diamonds and then entering them was inconsistent with

a subsequent claim that the diamonds failed to meet specification. The decision involved a factual determination rather than one of law. The importer simply failed to overcome the presumption that the diamonds were acceptable to the importer when they were examined before entry. The claim of poor lighting conditions at the time of the examination was not accepted by the Customs Service as a basis for granting drawback under 19 U.S.C. 1313(c).

An examination of merchandise before entry followed by entry creates a presumption that the examiner found the merchandise acceptable, that is, that the merchandise met specification. However, an importer could overcome that presumption by presenting satisfactory evidence to the contrary. Obviously, an unsupported, self-serving statement by the importer probably would not be sufficient to overcome that presumption.

Holding.—A preentry examination of merchandise by an importer or the importer's agent is but one factor to be considered in a claim for drawback under 19 U.S.C. 1313(c). A thorough analysis of all the facts involved must be done to determine the merits of a particular claim. In general, an examination overseas has little or no probative value, compared to an examination done immediately before entry, on a drawback claim under 19 U.S.C. 1313(c).

Effect on other rulings.—C.S.D. 79–367 was not intended to change any rules of examination. It expresses the principle that an importer who claims drawback under 19 U.S.C. 1313(c) must show that the merchandise did not conform to specification. The fact of a preentry examination by the importer increases the importer's burden of showing that the merchandise did not meet specification; however, it does not form an absolute barrier to allowance of drawback.

(C.S.D. 81–48)

Collections and Refunds: Tonnage Tax and Light Money Paid on Vessel Exempt From Such Payments

Date: August 22, 1980
File: VES-11-11-RRUCDC
104634 MKT

This decision concerns a refund of special tonnage tax and light money paid on a vessel of Saudi Arabian registry which is exempt from the payment of those taxes pursuant to section 4.22, Customs Regulations, when the vessel agent presented the permanent register, effective at the time of entry, to Customs after entry.

Issue.—Whether the exemption of vessels registered in Saudi Arabia from the payment of special tonnage tax and light money

provided by section 4.22, Customs Regulations, warrants a refund of those taxes paid on a vessel of Saudi Arabian registry when the vessel agent presented the permanent register, effective at the time of entry, to Customs after entry.

Facts.—On March 25, 1980, the petitioner (name of petitioner), paid special tonnage tax and light money totaling $5,151 on the Saudi Arabian (name of vessel). The provisional certificate of registry of the vessel expired on March 22, 1980, while the vessel was at sea. At the time of entry at Port Orange, Tex., on March 25, 1980, Customs officers assessed special tonnage tax and light money. When the permanent certificate of registry for the vessel, issued on March 23, 1980, was delivered from Saudi Arabia on April 2, 1980, the vessel agent presented it to Customs. In a letter dated April 10, 1980, the petitioner applied for a refund of these taxes.

Law and analysis.—Title 46, United States Code, section 8, provides that:

> Whenever any fine, penalty, forfeiture, exaction, or charge arising under the laws relating to vessels or seamen has been paid to any collector of customs, or Coast Guard official, or consular officer, and application has been made within 1 year from such payment for the refunding or remission of the same, the Commandant of the Coast Guard or the Commissioner of Customs, as the case may be, if on investigation he finds that such fine, penalty, forfeiture, exaction, or charge was illegally, improperly, or excessively imposed, shall have the power, either before or after the same has been covered into the Treasury, to refund so much of such fine, penalty, forfeiture, exaction, or charge as he may think proper, from any moneys in the Treasury not otherwise appropriated.

Any application for refund of tonnage tax pursuant to section 8 of title 46 must be made according to section 4.24 of the Customs Regulations. In compliance with section 8 of title 46 and section 4.24(c), Customs Regulations, the petitioner applied for a refund well within 1 year from the date of payment.

The application is based on section 4.22, Customs Regulations, which, since at least 1943, has exempted vessels registered in Saudi Arabia from the payment of special tonnage tax and light money. Although the permanent certificate of registry was not on board the vessel at the time of its arrival, the permanent certificate, issued on March 23, 1980, was in effect at that time. The original permanent certificate has been presented to the Customs Service in satisfaction of the requirement of an original register. Thus, the taxes in question, paid on March 25, 1980, were paid at a time when the vessel was exempt from their payment. In our opinion, the special tonnage tax and light money was assessed at a time when the vessel was exempt from such payment.

However, section 4.24(e), Customs Regulations, also requires that an application for a refund of tonnage tax include:

> * * * a certificate by the owner or by the owner's agent that payment of tonnage tax at the applicable rate has been or will be made for each entry of the vessel on a voyage on which that rate is applicable before the end of the current tonnage year, exclusive of any payment which has been refunded or which may be refunded as a result of such application.

Because the petition lacks this certificate, the refund is subject to its presentation to the Regional Commissioner of Customs.

Holding.—The exemption of vessels of Saudi Arabian registry from the payment of special tonnage tax and light money provided by section 4.22 Customs Regulations, warrants a refund of those taxes paid on the Saudi Arabian (name of vessel), on March 25, 1980, because the original permanent register, effective at the time of entry, but not on board the vessel, was subsequently presented to Customs. Therefore, subject to the presentation of the certificate required by section 4.24(e), Customs Regulations, the refund of the taxes noted above in the amount of $5,151 is granted and should be made in accordance with the provisions of section 4.24, Customs Regulations.

(C.S.D. 81-49)

Carrier Control: Application of Coastwise Laws to Crane Barge Engaged in Salvage Operations

Date: August 29, 1980
File: VES-3-02-RRUCDC
VES-3-06
104692 MKT

This ruling concerns the use of a foreign-built crane barge in lifting, maintenance, diving support, and salvage operations at places within the coastwise laws.

Issue.—Whether a foreign-built crane barge registered in the United States may, without violating the coastwise laws, engage in lifting, maintenance, diving support, and salvage operations at coastwise points and transport between coastwise points crewmembers, personnel involved in its activities, diving equipment, special tools and devices and explosives necessary to facilitate or accomplish these operations.

Facts.—Your corporation plans to install lifting gear on a foreign-built, U.S.-flag, non-self-propelled barge which will be used in lift operations; diving support activities; the maintenance of jackets, offshore structures, wellheads, pipelines, single buoy mooring systems,

docks, and piers; salvage; wreck removal; and other similar support activities. These activities may occur in the rivers, lakes, bays, sounds, and offshore waters of the United States. We assume that all these bodies of water are navigable waters as defined by the Coast Guard in title 33, Code of Federal Regulations (CFR), section 2.05–25(a). We further assume that the offshore waters include U.S. territorial waters as well as the high seas.

The barge will carry a crew, living on board, and other personnel who will be involved in the barge's activities. Diving equipment, diving life support systems, special tools, slings, bridles, underwater cutting devices, and explosives to facilitate or accomplish some projects, may be carried on the barge. The barge will not carry any salvaged articles or repair parts or materials.

Law and analysis.—The coastwise laws (see generally title 46, United States Code (U.S.C.), sections 289 and 883), prohibit a foreign-built vessel from transporting passengers or merchandise between points in the United States embraced within the coastwise laws or from transporting merchandise for any part of its movement between those points. A passenger is defined by regulation as any person carried on a vessel who is not connected with her operation, navigation, ownership or business (section 4.50(b), Customs Regulations; 19 CFR 4.50(b)). Merchandise includes goods, wares, and chattels of every description (19 U.S.C. 1401(c)). Coastwise points include U.S. territorial waters, navigable internal waters, and certain places on the high seas including the LOOP deepwater port and its mooring buoys, and drilling rigs attached to the Outer Continental Shelf for the purpose of extracting resources.

It is not necessary to address the issue of whether or not the places in question are coastwise points. The Customs Service has previously ruled with regard to your general activity, lifting objects, that a vessel is not used in the coastwise trade when a crane on board the vessel and not the vessel itself is used to move an object. Necessary movements incidental to the lifting operation while it is taking place, would not be considered in violation of the coastwise laws.

The Customs Service has further held that the carriage of personnel, supplies, and equipment necessary to a vessel's maintenance operations would not be in violation of the coastwise laws. Specifically, diving gear, diving support equipment installed on the vessel, special tools, slings, bridles, underwater cutting devices, and explosives necessary for the operations of the barge, carried on board the vessel would not constitute a violation of section 883.

The prohibition of title 46, United States Code, section 316(d), against a foreign-flag vessel engaging in salvage operations in U.S. territorial waters does not apply to a foreign-built vessel registered

in the United States. As long as the barge would not transport any salvaged materials or other merchandise between coastwise points as part of its salvage operations, no law administered by the Customs Service would prohibit the use of the barge to lift objects as part of a salvage operation.

Holding.—A foreign-built crane barge registered in the United States may engage in lifting, maintenance, diving support, and salvage operations at jackets, offshore structures, submerged structures, pipelines, single buoy mooring systems, docks and piers, without violating the coastwise laws provided that the vessel does not transport any salvaged material or other merchandise between coastwise points as part of these operations. No violation of the coastwise laws would occur if the vessel transports between coastwise points crewmembers, personnel involved in its activity, diving equipment, special tools and devices, and explosives necessary to facilitate or accomplish these operations.

Effect on other rulings.—Bureau of Customs letter MA 211.1 dated January 6, 1959, and Customs Service letter ruling VES–3–R:CD:C 102619 DR dated February 23, 1977, in which the salvage operations involved were considered coastwise trade from which foreign vessels are barred, are limited to their facts which involve the transportation of salvaged material between coastwise points.

This decision follows Customs Service Decisions (C.S.D.) 79–180, dated July 27, 1978 and 79–391, dated April 19, 1979 and Legal Determinations (L.D.) 3111–02, dated July 14, 1978 and 79–0517 (3100–81), dated December 3, 1979.

(C.S.D. 81–50)

Vessel Repairs: Dutiability of Repairs Covered by Warranty of Foreign Shipyard; Applicability of "One-Round Voyage" Rule

Date: September 23, 1980
File: VES–13–18–RUUCDC
104819 JM

This decision concerns a protest filed against Customs denial of a petition filed pursuant to section 4.14(k), Customs Regulations, for remission of duties assessed on the cost of foreign repairs to an American vessel.

Issues.—1. Whether work done on a U.S.-documented vessel under a foreign shipyard warranty agreement is considered a dutiable repair under the vessel repair statute (title 19, U.S.C., sec. 1466).

2. Whether duty under the vessel repair statute is applicable to foreign shipyard warranty work allegedly completed at no cost to the vessel's owner.

3. Whether the one-round voyage rule applies to repairs effected to parts covered by the warranty of a foreign shipyard.

Facts.—The record shows that the (vessel No. 1) was sold to (name of foreign corporation), (city), Japan; that the vessel's document was surrendered; that the bow and stern were removed and scrapped; that the midbody was used in the construction of the (vessel No. 2) and that a new official number was issued to the resulting vessel by the U.S. Coast Guard. The Coast Guard has informed us that the (vessel No. 2), (official number), was built in (year) in Japan; that the vessel was issued Permanent Register (number) on (date); and that its home port is listed as (city), Delaware. (Name of domestic corporation) has informed us that the first arrival of the (vessel No. 2) in the United States was on April 5, 1979.

Vessel repair entry No. 171819 covers foreign repairs to the vessel between the date it was documented as a vessel of the United States and the date the vessel first entered the United States. In a decision dated December 12, 1979, Headquarters, U.S. Customs Service, held that certain repairs were subject to duty under 19 U.S.C. 1466 while other items were not subject to duty under the vessel repair statute. Counsel for the vessel's owner has filed a protest against the decision that the duty applied to certain items which were under a warranty agreement.

Law and analysis.—1. 19 U.S.C. 1466 provides in pertinent part for payment of an ad valorem duty of 50 percent on the cost of foreign repairs to a vessel documented under the laws of the United States to engage in the foreign or coasting trade, or a vessel intended to engage in such trade.

Counsel for the vessel's owner contends that work done under a warranty does not constitute repairs under 19 U.S.C. 1466 and cites ORR ruling 23–69 in support of this contention. On page 13 of the memorandum attached to the protest, counsel states, "As the 1969 ruling noted, it is 'reasonable to assume' such work is not a repair."

Counsel has misquoted the subject ruling and placed an erroneous interpretation on the ruling. ORR ruling 23–69 stated, in pertinent part, "In the case of a new vessel on its first voyage, it is reasonable to assume that new equipment covered by a warranty is seaworthy for a round voyage, foreign and return. Unless the evidence indicates some other cause, failure of such equipment may be considered a 'casualty' * * *." Customs has always ruled that the existence of a warranty covering work on a vessel has no bearing on the classification of the work as repairs. If warranty work and repairs were mutually exclusive,

warranty work would not be dutiable and it would not be necessary to conclude that although such repairs are subject to duty, the duty is remissible since it was caused by what the Customs Service will deem to be a casualty.

Under the one-round voyage rule, a failure of a part is considered a casualty under the presumption that it should last for a one-round voyage following repairs. As stated in our original decision on this matter, an essential element of the one-round voyage rule is the fact that the vessel was built in the United States if a new vessel on its first voyage or, if other than a new vessel, that the vessel was repaired and/or serviced in the United States. This is consistent with a finding that the vessel's owner had done everything within his power to comply with the spirit of the statute, i.e. the protection of American shipyards. To apply the one-round voyage rule to warranty items of foreign shipyards would constitute a blatant disregard of the legislative intent.

2. Counsel states that warranty items are not dutiable because they were completed at no charge to the vessel owner. In a decision dated June 9, 1976, Customs held that repairs covered by a service agreement contract are dutiable under 19 U.S.C. 1466 even though the vessel owner was not charged for the repairs.

C.I.E. 542/62 held repairs to a radar unit dutiable even though the repairs were effected under a repair contract and the costs were not borne by the vessel owner.

The foregoing cases indicate that dutiability of repairs under 19 U.S.C. 1466 does not depend on payment for the repairs by the vessel owner at the time the repairs were made. It appears that the repairs in the subject case constitute prepaid repairs, a condition present in the June 9, 1976, decision cited in the preceding paragraph. A part of the purchase price for the subject vessel is attributable to the warranty agreement on the vessel.

3. Petitioner states that the one-round voyage rule should apply to repairs effected to parts covered by the warranty of a foreign shipyard. Since Customs established the one-round voyage rule which presumes a casualty under certain conditions without evidence of an actual casualty, Customs has the responsibility of setting the conditions under which a casualty is presumed. As stated above in a discussion of issue No. 1, an essential element of the one-round voyage rule is the fact that the vessel's owner followed the spirit of the statute by having an American shipyard build and/or repair the vessel.

The applicant is not asking that the one-round voyage rule be applied, but that it be extended to cover work covered by the warranty of a foreign shipyard. We note that the petitioner also asks that we apply the one-round voyage rule for the 12-month warranty period

even though the rule has previously covered only a 6-month period. We do not believe the requested extensions of the one-round voyage rule are warranted.

Holding.—1. Work done under a warranty agreement is considered repairs under the vessel repair statute and the cost thereof is dutiable in the absence of grounds for remission.

2. Repairs under the subject warranty agreement are dutiable as prepaid vessel repairs even though no consideration passed at the time of repairs.

3. The one-round voyage rule does not apply to repairs effected to parts covered by the warranty of a foreign shipyard.

In view of the above holding, Los Angeles Protest No. 27040-000830 dated March 20, 1980, is denied.

(C.S.D. 81-51)

Entry: Regulatory Revisions to Power of Attorney Form to Eliminate Corporate Seal Requirement, Certification of Corporate Principal & Second Officer's Signature

Date: June 8, 1980
File: ENT-1-01:RRUEE
712286

This refers to your letter of January 22, 1980, with enclosure, and your letter of March 17, 1980, suggesting various revisions in the power of attorney form and the regulations pertaining to that form.

Basically you wish to have the form simplified to eliminate the requirement of a corporate seal and delete the certification as to corporate principal and the second officer's signature. You also suggest that we eliminate some of the additional evidence presently required for nonresident corporations under section 141.37 of the regulations, and you wish us to rescind section 141.43(a), which prohibits brokers who hold a power of attorney from a resident principal from appointing brokers at other ports as subagents.

After a careful review of your proposals, we conclude that a Customs power of attorney need not be executed under seal, nor must there be a second corporate officer's signature or a certificate as to corporate principal. Although not specifically addressed in your letter, we reach the same conclusion with respect to the individual or partnership certification.

We will advise our ports of this ruling, and will amend the regulations to reflect this change in policy. We will not delete the certifications from the form, because some corporations or partnerships may

wish to execute the certification, or it may be required by the law of the jurisdiction in which they are incorporated, or in which a partnership was formed. When the form is reprinted, within the next few months, we will indicate on the form that the use of the seal and completion of the certification are optional.

Because of our limited jurisdiction over foreign corporations, we believe that the evidence presently required by section 141.37 of the regulations is necessary to protect the Government and others, such as sureties, who deal with the foreign corporations.

Finally, we believe that rescinding section 141.43(a) of the regulations is inadvisable, as it could well lead to brokers engaging in business, indirectly, in districts where they were not licensed. Our ruling of October 23, 1978 (Legal Determination 3532-11, copy enclosed), permits a broker to issue powers of attorney to other brokers under the conditions set forth in the ruling.

United States Court of International Trade

One Federal Plaza
New York, N.Y. 10007

Chief Judge

Edward D. Re

Judges

Paul P. Rao
Morgan Ford
Scovel Richardson
Frederick Landis
James L. Watson
Herbert N. Maletz
Bernard Newman
Nils A. Boe

Senior Judge

Samuel M. Rosenstein

Clerk

Joseph E. Lombardi

Decisions of the United States Court of International Trade

(Slip Op. 81-2)

S. J. STILE ASSOCIATES, LTD., ET AL., PLAINTIFFS *v.* DENNIS SNYDER, ET AL., DEFENDANTS

Order Denying Plaintiffs' Motion For Preliminary Injunction

Court No. 80-12-00175

(Dated January 12, 1981)

BOE, Judge: This proceeding having been regularly brought on for hearing, commencing on Wednesday, January 7, 1981, pursuant to

the application of the plaintiffs for a temporary injunction seeking to enjoin the defendants from implementing a directive, referred to in the within proceedings as Pipeline No. 524, issued by the Regional Commissioner of Customs for the New York region under date of November 7, 1980, and

This court having heard and considered the evidence adduced by the parties through the presentation of their respective witnesses, the arguments presented as well as the memoranda submitted by counsel, and

Upon the conclusion of the testimony and the within proceedings on Friday, January 9, 1981, the court having presented orally in open court its opinion and decision with respect to plaintiffs' application, which said oral statement of opinion and decision is a part of the official record in this proceeding and, accordingly, is made a part hereof by this reference, and

From the files and records herein as well as from the evidence adduced, it appears to the satisfaction of this court:

1. That the power granted to the Regional Commissioner of Customs by section 141.62, 19 Code of Federal Regulations to approve locations with respect to applications for immediate delivery and entry, entry summary, or withdrawal documentation is a valid delegation of authority by the Secretary of the Treasury. That implicit in the authority granted to the Commissioner to make such administrative policy determinations as afore-referred-to is the authority to alter and change such locations as might be required in keeping with sound administrative practices and needs.

2. That from the undisputed evidence adduced it is acknowledged that Pipeline No. 524, the document concerning which the implementation thereof is the basis and subject matter of plaintiffs' application for a temporary injunction, will not be implemented by the Regional Commissioner of Customs. That in lieu thereof a revised directive containing additional revisions, as set forth in Pipeline No. 524 supplement 1 (defendants' exhibit M) will be subsequently promulgated and implemented. The issue with respect to injunctive relief sought by the plaintiffs with respect to the alleged implementation of Pipeline No. 524, accordingly, is deemed moot.

3. The plaintiffs have failed to establish proof of irreparable injury. Except for testimony presented that increased costs in business operations would result in the event Pipeline No. 524 is implemented, minimal and insufficient proof, other than speculations, has been presented that a loss of business or other irreparable damage would result.

4. The extent of possible irreparable injury to the plaintiffs, if the injunctive relief sought is denied, is outweighed by the injury

affecting the public interest. The implementation of the proposed Pipeline No. 524 by the Regional Commissioner of Customs was designated (a) to promote administrative efficiency and (b) to correct existing abuses, irregularities, and dishonest and fraudulent practices being committed individually and/or jointly by some Customs Service personnel and some Customs brokers. The necessity to maintain integrity in government and in the conduct of its agencies and departments is of paramount and vital interest to the entire Nation. For this court to substitute its judgment with respect to administrative policy determinations and the necessity therefor in place of the judgment of a designated representative of the executive branch of government and to halt the considered efforts to eliminate the continuation of fraud and corruption admittedly existing in the Customs Service, calls for a greater showing of the irreparable injury to the plaintiffs and others who are employed and/or working in the very area in which such fraud and corruption has existed, than has been presented in the within proceeding.

5. From the evidence adduced, therefore, it is the opinion of the court that a likelihood of success on the part of the plaintiffs in a trial of the within action on the merits does not exist.

Accordingly, it is hereby

ORDERED that the motion of the plaintiffs for a preliminary injunction herein be and is hereby denied.

(Slip Op. 81–3)

CONNORS STEEL COMPANY, PLAINTIFF *v.* UNITED STATES, DEFENDANT

Memorandum Opinion

Court No. 80–3–00478

deKieffer, Berg & Creskoff (*Donald E. deKieffer* and *Eric I. Garfinkel*) for the plaintiff.

Alice Daniel, Assistant Attorney General: *Joseph I. Liebman*, Attorney in Charge, International Trade Field Office, Commercial Litigation Branch (*Velta A. Melnbrencis*, trial attorney), for the defendant.

Graubard, Moskovitz, McGoldrick, Dannett & Horowitz (*Michael H. Greenberg* and *Charles L. Rosenzweig* of counsel) as amicus curiae.

(Dated January 12, 1981)

WATSON, Judge: The court ordered the parties to file memorandums addressed to the question of the proper scope of review of an action under 19 U.S.C. §1516(d) (1976).[1]

[1] Text of 19 U.S.C. § 1516(d): Contest of Secretary's determination that foreign merchandise is not being sold in United States at less than fair value or that bounty or grant is not being paid. Within 30 days after a

(Continued)

This action is governed by the law in effect prior to the Trade Agreements Act of 1979, which now, at 19 U.S.C. § 1516a(b)(1)(B), provides that the standard of review in actions of this type is to be whether the determination is supported by substantial evidence.

In this case the action was brought to challenge a determination by the Secretary of the Treasury that certain steel I-beams from Belgium were not being sold here at less than their fair value (44 F.R. 54579). That determination ended the investigation of the petition by which plaintiff Connors, a domestic manufacturer of steel, had sought to have antidumping duties assessed against the product of S. A. Cockerill, which was being imported by the Cockerill-Stinnes Steel Corp.

The two Cockerill firms have filed an amicus curiae brief on the question under examination.

Plaintiff argues for a de novo trial of the issue of sales at less than fair value. Defendant United States and amicus argue for a review based solely on the administrative record to judge whether substantial evidence existed for the administrative determination.

Plaintiff stresses the decision in *Michelin Tire Corporation* v. *United States*, 82 Cust. Ct. 308, C.R.D. 79-6, 469 F. Supp. 270 (1979) in which the court held that a trial de novo was proper in an action challenging the imposition of countervailing duties. In that far-ranging decision, the court also attempted to demonstrate that in similar actions regarding antidumping duties, certain antiquated restrictions on judicial review ought not to be perpetuated.

However, the *Michelin* opinion rested on the very important premise that the actions under discussion were actions to recover payments of duty. The court took care to distinguish that type of legal action, which had important common law antecedents and implications, from those actions which, like this one, are directed to a single administrative determination and are purely the creation of statute.[2]

Moreover, in the absence of explicit statutory guidelines, it is reasonable to posit a more complete form of judicial review for an action arising from the right to be free of illegal taxation than for an

---

(Continued)

determination by the Secretary—(1) under section 201 of the Antidumping Act, 1921 (19 U.S.C. 160) [19 USCS § 160], that a class or kind of foreign merchandise is not being, nor likely to be, sold in the United States at less than its fair value, or (2) under section 303 of this Act [19 USCS § 1303] that a bounty or a grant is not being bestowed, an American manufacturer, producer, or wholesaler of merchandise of the same class or kind as that described in such determination may file with the Secretary, a written notice of a desire to contest such determination. Upon receipt of such notice, the Secretary shall cause publication to be made thereof and of such manufacturer's, producer's, or wholesaler's desire to contest the determination. Within 30 days after such publication, such manufacturer producer, or wholesaler may commence an action in the U.S. Customs Court contesting such determination.

[2] * * * [W]hen a party contests an *assessment of duty* and raises the above issues [existence of injury, or sales at less than fair value] in the Customs Court, it does so, *not by virtue of a right to judicial review of any particular underlying administrative proceeding*, but as the consequence of the *right to bring an independent civil action for the recovery of duty*.

The party therefore has a right to have all the issues in that action tried on the record made before the court. *Michelin Tire Corporation* v. *United States*, 82 Cust. Ct. at 333. [Italic supplied.]

action arising from a right to have the health of one's industry protected by the assessment of duty on others.

It is therefore appropriate that for the period in which the statutes gave no specific scope or standard of review; for those actions in which the recovery of duty was not the object and in which an adequate administrative record existed, judicial review should normally be limited to the administrative record.

The court finds additional support for this view in the result of *Armstrong Bros. Tool Co.* v. *United States*, 67 CCPA ——, C.A.D. 1252, 626 F. 2d 168 (1980) and sees no meaningful difference between an action directed at a "no-injury" finding by the International Trade Commission and the finding at issue here.

The proper standard of review is whether the determination in question was supported by substantial evidence and in accordance with the law. This is the most complete examination that can be made without replacing the administrative agency as the arbiter of the evidence.

The court's approval of review on the administrative record does not imply the recognition of any discretion on the part of the administrative agency in the sense of discretion as the exercise of subjective standards or hermetic reasoning. This is mentioned because a tendency is noticed to blur the distinction between true discretion (which is unusual and for which the standard of substantial evidence would be inappropriate) and the normal range of authority which an agency has in administering a law. The latter is not properly termed discretion or, at least, is not the discretion which inhibits judicial review.

For the reasons expressed above, it is decided that in an action brought under 19 U.S.C. § 1516(d) (1976) to contest a determination by the Secretary of the Treasury that a class or kind of merchandise is not being sold here at less than its fair value, the court shall review the matter on the administrative record and judge whether the determination was unsupported by substantial evidence or otherwise not in accordance with the law.

(Slip Op. 81–4)

ROSES, INC., PLAINTIFF *v.* UNITED STATES, DEFENDANT, AGREXCO AGRICULTURAL EXPORT CO., INTERVENOR

Court No. 80–9–01545

Memorandum Opinion and Order

(Dated January 12, 1981)

Defendant has moved for a protective order for 13 documents included in the administrative record forwarded to the clerk of the

court in connection with the above captioned countervailing duty case on fresh cut roses imported from Israel.

The 13 documents consist of:

1. Two copies of draft notice of the initiation of the countervailing duty investigation, prepared by the U.S. Customs Service for the General Counsel of the Treasury (pp. 1785–89 and 1797–1801 of the record);

2. A briefing memorandum to the Commissioner of Customs concerning the initiation of the investigation (p. 1778 of the record);

3. Two copies of a memorandum from the Commissioner of Customs to the General Counsel of the Treasury regarding the initiation of the investigation (pp. 1779–81 and 1782–84 of the record);

4. Handwritten notes prepared by Anne White Foley regarding a meeting on August 1, 1980 with Robert Robeson, Office of Policy, Import Administration, and Frank Crowe, Import Administration Specialist (pp. 341–2 of the record);

5. Five drafts of the final countervailing duty determination and order (pp. 164–208, 210–261 and 292–310 of the record);

6. A handwritten note from Lynn J. Barden to Anne White Foley (p. 209 of the record) expressing his opinion regarding the draft appearing at pages 210–237 of the record; and

7. A handwritten note from Frank Crowe to John D. Greenwald (p. 291 of the record) transmitting the draft appearing at pages 292–310 of the record.

Plaintiff's response to defendant's motion included a motion for the release of these documents under a protective order limiting access to those members of plaintiff's counsel's office who are actively assisting in this litigation. The main thrust of plaintiff's argument in support of its position that the documents be at least partially released is that information for which governmental or executive branch privilege is sought should not be handled differently from that in which business confidential information is involved. Additionally, plaintiff claims that defendant has not met the burden of showing that all of the documents for which a privilege is sought are such that disclosure would impair the free flow of advice, without, however, specifying which of the documents were so affected.

Agrexco Agricultural Export Co. Ltd., the intervenor, did not file any responses to either motion.

In all cases in which a protective order is sought, the courts must weigh the need for the materials sought against the potential harm that would result from their disclosure. *SCM Corp.* v. *United States* (*Brother International Corporation, Party-in-Interest*), 82 Cust. Ct. 351, C.R.D. 79–11 (1979); *United States* v. *Nixon*, 418 U.S. 683, 705, 94 S. Ct. 3090 (1974).

It has been well settled that in weighing the conflicting interests to determine whether the documents should be protected, disclosed or disclosed in part, a specific need must be demonstrated for the materials sought by the party seeking their disclosure. See the *SCM Corp.* case cited supra, and the cases discussed therein. Plaintiff has not demonstrated such a specific need, but has merely requested that the documents be released for examination and copying under a protective order restricting access to the materials to certain persons in its counsel's office. Without evidence of a specific need, there is nothing to weigh against the governmental policy and need to protect the confidentiality of executive communications. Plaintiff's motion for release of the involved documents must, accordingly, be denied and we need not reach the merits of plaintiff's argument that the governmental privilege should be accorded the same treatment as business confidential privilege.

In determining whether defendant's motion for a protective order should be granted, it must be established that there has been full compliance with the established criteria: The privilege must be formally claimed; it must be asserted by the head of the agency having control over the matter, who personally considered the matter; the materials must be reviewed; and an appropriate affidavit must be submitted in support of the claim of privilege.

The formal claim of privilege was asserted both in defendant's motion for a protective order and in the affidavit of Philip M. Klutznick, who is Secretary of the Department of Commerce and who qualifies as the head of the agency having control of the matter as the Department of Commerce was given the authority for administering the countervailing duty law in title I of the Trade Agreements Act of 1979, which became effective on January 1, 1980. In his affidavit he affirms that he personally reviewed the documents and the circumstances of their preparation in all respects and that their protection from disclosure is necessary to insure the free flow of essential advice, recommendations, analysis, and opinion necessary for effective decisionmaking in the conduct of countervailing duty investigations and determinations. The affidavit is appropriate in all respects.

The documents in question have been reviewed in camera and are what they are represented to be in defendant's moving papers and in Secretary Klutznick's affidavit, and the criteria for the grant of a protective order have been met by the defendant. Accordingly, it is

ORDERED that the 13 documents appearing at pages 164–261, 291–310, 341–342, 1778–1789, and 1797–1801 of the administrative record previously forwarded to the clerk of this court in connection with the countervailing duty investigation of fresh cut roses from

Israel are hereby recognized as privileged documents not subject to discovery or disclosure.

We also note that defendant has filed a motion for leave to respond out of time to plaintiff's motion for release of the involved documents under a protective order on Janurary 8, 1981. Since this opinion and order grant defendant's motion that the documents be recognized as privileged, defendant's response to plaintiff's motion indicating that it still adheres to its position set out in its motion for a protective order is not required and the motion for leave to file out of time a response to plaintiff's motion for release of documents is DENIED.

(Slip Op. 81–5)

STANDARD SURPLUS SALES, INC., PLAINTIFF, *v.*
UNITED STATES, DEFENDANT

Decision

Court No. 73–12–03398

CLASSIFICATION—BACKPACKS

Packs of various sizes and configurations were found to be chiefly used in the sport of backpacking. They were therefore properly classifiable as sports equipment under item 735.20 and were not luggage within the meaning of item 706.24.

[Judgment for plaintiff.]

(Decided January 13, 1981)

Stein, Shostak, Shostak and O'Hara, Inc., for the plaintiff.
(*John N. Politis* of counsel) for the plaintiff.
Alice Daniel, Assistant Attorney General; *Joseph I. Liebman*, Attorney in Charge, International Trade Field Office, Commercial Litigation Branch (*Robert H. White*, trial attorney, of counsel), for the defendant.

WATSON, Judge: Plaintiff seeks classification as sports equipment [1] for certain imported bags which were classified as luggage [2] and for a shoulder pad which was classified as other cotton articles.[3]

At the conclusion of the trial the court granted judgment for the plaintiff.

The court found the testimony and exhibits offered on behalf of plaintiff distinctly more persuasive than the testimony and exhibits

[1] Item 735.20, dutiable at the rate of 10 percent ad valorem.
[2] Item 706.24, dutiable at the rate of 20 percent ad valorem.
[3] Item 386.50, dutiable at 14 percent ad valorem.

offered by defendant. Plaintiff's witnesses had long experience with backpacking and a familiarity with the design, use, and sale of backpack equipment which was national in scope and of extended duration. By contrast, defendant's witnesses were limited to more general personal observations made at a university bookstore, a college campus and Los Angeles International Airport, none of which amount to more than fragmentary familiarity with the subject and fugitive uses. In addition, examination of the exhibits show them to be markedly different from articles known as luggage, which are defined in the Tariff Schedules in schedule 7, part 1, subpart D, headnote 2(a) as:

> (i) Travel goods, such as trunks, hand trunks, lockers, valises, satchels, suitcases, wardrobe cases, overnight bags, pullman bags, gladstone bags, haversacks, duffel bags, and like articles designed to contain clothing or other personal effects during travel.
>
> (ii) brief cases, portfolios, school bags, photographic equipment bags, golf bags, camera cases, binocular cases, gun cases, occupational luggage cases (physicians, sample, etc.) and like containers and cases designed to be carried with the person, except handbags as defined herein.

None of the importations illustrated by plaintiff's first 11 exhibits are designed to, or would be convenient to, carry by hand. The first five exhibits [4] are specifically designed to be attached to a metal frame and it would be contrary to the weight of the evidence to consider them alone, or in conjunction with the frame, as pieces of luggage. The remaining articles are frameless smaller packs designed for the shoulders,[5] a small pouch for attaching to the belt by loop or clip,[6] a belted pouch which rests on the user's rear end,[7] and a bag designed for the compressed storage and carrying of a sleeping bag.[8]

The court concludes that the chief use of these articles is in the sport of backpacking, a use which is not the sort of travel for which the luggage provision of the Tariff Schedules was intended. Use of these packs is use of the essential instruments with which the sport is practiced.[9]

Although an illustrative example of the shoulder pad was not included, the other evidence and testimony satisfied the court that the pad was designed and chiefly used as a cushion for the shoulders in conjunction with backpacks and was also an item of sports equipment.

---

[4] The 578–G Ridge Runner Bag; 579–B Trail King Bag, 584 Crestline Bag, 586–B Pathfinder Bag, and 588–B Cougar Bag (represented by the 588–E, Ecology Bag).

[5] The 561 Overnight Bag, 562 Mini-Ruck and 563 Hiker Rucksack.

[6] The 871 Belt Pouch.

[7] The 565 Fanny Bag.

[8] The 869 Stuff Bag.

[9] See *Newman Importing Co. Inc.* v. *United States*, 76 Cust. Ct. 143, C.D. 4648 (1976).

For the reasons expressed above, the court concluded that all these importations are designed and chiefly used in the sport of backpacking and should have been classified as sports equipment under item 735.20.

Judgment will enter accordingly.

(Slip Op. 81–6)

CORPORACION SUBLISTATICA, S.A., PLAINTIFF *v.* UNITED STATES, DEFENDANT

Court No. 77–11–04749

Ink powders

A gravure ink contains a colorant, consisting of either a pigment or a dye, a binder and a solvent.

An ink powder possesses all of the components of an ink other than the solvent.

In current technology the meaning of the term "ink powder" is not restricted to a powder soluble only in water and used only for the preparation of writing or drawing inks.

The imported merchandise consisting of a dye colorant and an ethycellulose binder constitutes a homogeneous mixture, without separate and distinct components, which upon the addition of the solvent, ethanol, becomes a liquid gravure ink suitable for printing in a gravure press.

The imported merchandise, absent the solvent, is properly classified by its eo nomine classification as an ink powder and is more specifically described thereby under item 405.10, TSUS.

The transfer of the dye colorant from the image on the printed gravure paper to a textile material is a subsequent process which, by the use of heat and pressure, utilizes the favorable sublimable characteristics of the dye colorant.

[Judgment for plaintiff.]

(Decided January 14, 1981)

Siegel, Mandell & Davidson (*Herbert T. Posner* at the trial and on the brief) for the plaintiff.

Alice Daniel, Assistant Attorney General; *Jospeh I. Liebman*, Attorney in Charge, International Trade Field Office, Commercial Litigation Branch (*Sidney N. Weiss* at the trial and on the brief), for the defendant.

BOE, Judge: In the above-entitled action the merchandise in question, consisting of powders containing benzenoid crude colors

and ethylcellulose, was imported from Switzerland and entered at the Port of San Juan, P.R. between December 1973 and December 1975.

Upon liquidation the merchandise was classified under item 406.50, TSUS, providing:

SCHEDULE 4—CHEMICALS AND RELATED PRODUCTS

PART 1—BENZENOID CHEMICALS AND PRODUCTS

406.50	Colors, dyes, and stains (except toners), whether soluble or not in water, obtained, derived, or manufactured in whole or in part from any product provided for in subpart A or B of this part	20% ad val.

The plaintiff, however, contends that said merchandise should be properly classified under item 474.26, TSUS, providing:

SCHEDULE 4—CHEMICALS AND RELATED PRODUCTS

PART 9—DYEING AND TANNING PRODUCTS; PIGMENTS AND PIGMENT-LIKE MATERIALS; INKS, PAINTS, AND RELATED PRODUCTS

	Inks and ink powders:	
	* * * * * * *	
474.26	Other inks	2% ad val.
	Printing and lithographic inks	
	Other	

In the alternative plaintiff contends the merchandise should be classified as ink powders under item 405.10, TSUS, providing:

SCHEDULE 4—CHEMICALS AND RELATED PRODUCTS

PART 1—BENZENOID CHEMICALS AND PRODUCTS

	Products obtained, derived, or manufactured in whole or in part from any product provided for in subpart A or B of this part:	
	* * * * * * *	
405.10	Ink powders	1.7¢ per lb. +11% ad val.

The powders in question, more specifically referred to herein as Yellow 2100, Red 2301, Violet 2404, Blue 1561 and Blue 2505 are products of Ciba-Geigy, A.G., a chemical manufacturing company located in Switzerland. In their manufacture the colorant, a benzenoid dye, is combined with salt and ethylcellulose in a heavy-duty plate kneader. The foregoing ingredients are ground together forming a

homogeneous mixture. Upon the addition of a solvent consisting of diacetone alcohol, a globby paste is formed. After cooling, further kneading is continued for a considerable length of time. With the addition of water to the paste within the kneader, the alcohol solvent and the salt are dissolved forming a watery slurry. In a subsequent filtering process the watery substance is separated from the powder. The latter is then thoroughly rinsed removing all remaining traces of salt and solvent. The resulting powder, when dried, consists of a benzenoid dye colorant of approximately 75 percent and ethylcellulose of approximately 25 percent, with the exception of Blue 1561 which consists of approximately 50 percent dye colorant and 50 percent ethylcellulose.

After the importation and delivery of the powder in sealed drums to the plaintiff at its printing plant in Puerto Rico, ethanol is added thereto causing the powder to liquify. This substance is thereupon used by the plaintiff in a standard gravure press to print desired patterns and designs upon customary rotogravure paper. Although gravure printing is used in connection with the printing of wrapping papers, newspapers, packaging for various products and transfer paper, it is the printing and sale of the latter product with which the plantiff is principally engaged.

In support of the classification of the imported powders as a dye under item 406.50, TSUS, the defendant directs our attention to the nature of the image printed by the gravure press upon the paper as well as the result occurring when the printed image upon the paper is transferred to a textile in a subsequent and unrelated process referred to as heat transfer.

In the heat transfer process a portion of the dye colorant contained in the image printed on the gravure paper is caused to sublime by means of the application of high pressure and a high temperature ranging from 160° to 220° C., thereby causing in turn the image or design to be transferred or affixed to the textile material.

From the testimony of the witnesses presented in the trial of the instant action, this court concludes that the imported merchandise in question is not a dye.

All witnesses are in agreement, including the defendant's single witness, that a dye, without the addition of a binder cannot be used in a gravure press. The testimony of the defendant's witness, Dr. Feeman, as well as the test report of the U.S. Customs Laboratory, a part of the official record of the within proceedings, acknowledge that the imported powder contains two components—a benzenoid dye colorant and a polymer binder consisting of a cellulose component.[1]

---

[1] The report of the U.S. Customs Laboratory describes a sample:

The sample, a dark red powder, is composed of a benzenoid dye and a synthetic plastics material (cellulose ester type). Schedule A information indicates it is used in the printing of paper.

This office knows of no comparable domestic product.

From the evidence adduced at the trial herein, it is manifestly clear that ethylcellulose provides viscosity to the ink necessary to permit its utilization in gravure printing. The evidence likewise is undisputedly clear that it is the ethylcellulose which in the printing process binds the dye colorant to the paper in the form of a desired image, thereby permitting the favorable sublimable characteristic of the benzenoid dye colorant contained in the printed image to be advantageously utilized in a subsequent independent heat transfer process. As succinctly described by the plaintiff's expert witness, Professor Gryte, the grinding of the benzenoid dye colorant with the polymer, ethylcellulose, causes the former to become veritably encapsulated by the latter. The powder resulting from the grinding process contains no separate and distinct components and is in fact a homogeneous mixture, evidencing, however, the dominant characteristics of the ethylcellulose contained therein.[2]

In its testimony challenging the liquidated classification of the subject merchandise, the plaintiff concurrently seeks to sustain its burden of establishing its claimed alternative classifications. In so doing, it has been clearly established without contradiction that a gravure ink, to which a great portion of testimony has been devoted, contains a colorant, consisting of a pigment or a dye, a binder and a solvent. It likewise appears to be without dispute that a wide variety of inks exist, differing both in constituency as well as in purpose. While writing inks may be characterized by the penetration of the ink into the substrate upon which it is applied, a gravure ink, on the other hand, is produced to provide adhesion with a minimum amount of penetration into the substrate. This drying process is accomplished by evaporation.

In the production of gravure inks, it appears from the uncontroverted evidence that dyes are frequently used as colorants. Various solvents are used therein including water, hydrocarbons, alcohols, esters, and ketones. The use of ethylcellulose as a binder in a gravure ink has caused the same to be characterized under the specific designation, type B gravure inks.[3]

In referring to the respective functions of the binder and the solvent contained in a gravure ink, plaintiff's witness, Mr. George, describes the solvent as the diluent for the ink which liquefies the binder. Upon completion of the printing, the solvent evaporates in the drying process, whereas the binder returns to its original state, binding and affixing the colorant to the substrate.

---

[2] R. 191-92.
[3] V. Strauss, *The Printing Industry* 613.

In the Tariff Classification Study, Schedule 4 at 151, the Explanatory Notes state:

> Inks, also included in subpart C, are related to paints in that they contain a coloring agent and a *liquid vehicle*. [Italic added.]

It, accordingly, must be concluded that a finished ink classifiable under item 474.26, TSUS, necessarily must contain a liquid component. As may be visually observed from the subject merchandise represented by plaintiff's exhibits 4–13 inclusive, the dry powder as imported cannot be classified a finished ink under the tariff schedules.

Nor can it be successfully maintained that the subject merchandise may be classified an unfinished ink. The provisions of General Interpretative Rule 10(h) relating to an article, whether finished or unfinished cannot be deemed applicable, where, as also provided therein, the context requires otherwise.[4] From a consideration of the evidence presented, the court, however, is satisfied and, therefore, finds that the imported merchandise in question is, in fact, an ink powder which Congress has specifically described and classified under item 405.10, TSUS, and, accordingly, the context requires that the same cannot be classified as unfinished ink under item 474.26, TSUS.[5]

Plaintiff's witness, Mr. George, whose extensive experience in the ink industry lends significant credibility to his testimony, defines an ink powder as possessing all of the components of an ink other than the solvent. His testimony reveals that the ratio of a colorant to a binder in a gravure ink may vary widely, dependent on the desired or required application. Under the supervision of the witness, Mr. George, the imported powders, upon the addition of the solvent, ethanol, were tested by using the same in a gravure printing press. The printing produced thereby was comparable to the quality and standard recognized in the gravure printing industry.

In the consideration of the foregoing testimony and its determinative effect, it is important to bear in mind that in determining whether an imported article is embraced within an eo nomine designation, its use may be considered in order to determine its identity. *United States* v. *Quon Quon Company*, 46 CCPA 70, C.A.D. 699 (1959); *Trans-Atlantic Company* v. *United States*, 68 Cust. Ct. 105, C.D. 4344 (1972). From the evidence presented the court is satisfied that the constituency of

---

[4] General Interpretative Rule 10(h)—

(h) unless the context requires otherwise, a tariff description for an article covers such article, whether assembled or not assembled, and whether finished or not finished; * * *.

[5] Were, for the sake of argument, the merchandise in question to be described as an unfinished ink under item 474.26, TSUS, the court, nevertheless would be compelled to classify the same as an ink powder by virtue of General Interpretative Rule 10(c) providing:

(c) an imported article which is described in two or more provisions of the schedules is classifiable in the provision which most specifically describes it; * * *.

the imported merchandise, the addition of the solvent thereto and its subsequent application in its liquid form in a gravure printing process requires the inclusion of the said imported merchandise under its eo nomine designation, an ink powder under item 405.10, TSUS.

In support of the liquidated classification of the merchandise in question the defendant contends that an ink powder, within the meaning of the tariff schedules must be water soluble and used in the preparation of writing and drawing inks. In so doing, it relies upon statements made in the "Dictionary of Tariff Information" (1924), and the 1948 "Summaries of Tariff Information," both having been prepared by the U.S. Tariff Commission. The commodity summaries in these compilations were prepared, however, after the Tariff Acts of 1922 and 1930 respectively, and cannot be said to reflect the congressional intent with respect to the enactment of those acts and/or the provisions contained therein. *See Dodge & Alcott, Inc.* v. *United States*, 45 CCPA 113, C.A.D. 638 (1958). Nor has this court been able to discover from legislative history or otherwise what specific meaning may have been intended by the Congress to be applied to the term "ink powder" as contained in the tariff schedules. It is axiomatic that an eo nomine provision, without limitations or a shown contrary legislative intent, judicial decision, or administrative practice to the contrary, and without proof of commercial designation, will include all forms of said article. *T. M. Duche & Sons, Inc.* v. *United States*, 44 CCPA 60, C.A.D. 638 (1957). Suffice it to say, that no descriptive limitations are contained with respect thereto in the said tariff schedules.

It is, however, a well-established principle of customs law that tariff acts are made not only for the present but also for the future, thereby embracing articles produced by technologies which may not have been employed or known to commence at the time of the enactment of the original provision. *Davis Turner & Co.* v. *United States*, 45 CCPA 39, C.A.D. 669 (1957). Contrary to the defendant's assertion to this court, it is worthy of note that the 1968 "*Summaries of Tariff and Trade Information*," schedule 4, volume 10 at 143 indicates that current technology does not restrict the meaning of ink powders to water soluble powders, used for the preparation of writing or drawing inks.

> Ink powders are materials that become inks upon the addition of *a liquid, usuually water*. Ink powders are used mostly in the preparation of writing or drawing inks. [*Italic added.*]

It may likewise be noted that the defendant in its answers to plaintiff's interrogatories has admitted that today ink powders are diluted by solvents other than water, such as alcohols and varnishes.

At the conclusion of plaintiff's case, the defendant moved to amend its answer to conform to the evidence by alleging that the subject

merchandise should alternatively be classified as a mixture under item 409.00, TSUS, schedule 4, part 1, providing:

409.00		
Mixtures in whole or in part of any of the products provided for in this subpart	3.5¢ per lb. +22.5% ad val.	

Plaintiff has objected to defendant's motion as untimely and prejudicial. The court agrees and the defendant's motion is accordingly denied.

The dual burden of proof imposed upon a plaintiff in the trial of an action of this character is onerous. In asserting an alternative classification, the defendant should be required to present the same in sufficient time so as to permit the plaintiff an opportunity to properly challenge the correctness thereof. To grant the proffered amendment to defendant's answer after the plaintiff has rested, with the probability that its witness, upon whom the plaintiff must rely to maintain its burden, are no longer available, is to place the plaintiff in a position which is not only prejudicial but patently untenable.[6]

Accordingly, the court finds that the plaintiff has overcome the presumption of correctness attached to the classification of the subject merchandise determined by the Customs Service and from the evidence submitted has established that the said merchandise at the time of importation is a gravure ink powder, obtained, derived or manufactured in part from a benzenoid chemical provided for in subpart A or B of part 1, schedule 4 and properly classified under item 405.10 TSUS.

Let judgment be entered accordingly.

(Slip Op. 81-7)

HAARMAN & REIMER CORPORATION, PLAINTIFF *v.* UNITED STATES, PHILIP M. KLUTZNICK, SECRETARY OF COMMERCE; ROBERT E. HERZSTEIN, UNDER SECRETARY OF COMMERCE FOR INTERNATIONAL TRADE, DEPARTMENT OF COMMERCE; ROBERT E. CHASEN, COM-

[6] Suffice it to say, that notwithstanding the denial of defendant's motion, the proffered alternative classification could not be sustained with respect to the subject merchandise. In headnote 3(a) to schedule 4 mixtures are defined as "substances consisting of two or more ingredients * * * which, however thoroughly commingled, retain their individual chemical properties and are not chemically united."

The very testimony of plaintiff's expert witness, Professor Gryte, upon which the defendant predicates the motion to amend its answer, serves to establish, without contradiction, that the subject powders are not a mixture within the defined limitations of the aforequoted headnote. As previously noted, Professor Gryte in his testimony concludes that the dye colorant in the subject powders has not retained its individual chemical properties and that, in fact, the powders are a homogeneous mixture, evidencing the dominating effect of the binding agent ethylcellulose.

MISSIONER OF CUSTOMS; AND ALL DISTRICT DIRECTORS OF CUSTOMS, DEFENDANTS

Court No. 81-1-00027

Order Denying Plaintiff's Application for Temporary Restraining Order and Fixing Time for Hearing on Plaintiff's Motion for Preliminary Injunction

(Dated January 15, 1981)

BOE, Judge: The above-entitled proceeding having duly and regularly been brought on for hearing pursuant to the application of the plaintiff for a temporary restraining order, directing the defendants to restrain from the liquidation of any and all unliquidated entries of menthol from the People's Republic of China entered, or withdrawn from warehouse, for consumption on or after October 16, 1980, the date which is 90 days before the date on which suspension of said merchandise was ordered (January 14, 1981), and

The motion of the plaintiff for a preliminary injunction in like manner enjoining the defendants pending the final hearing and disposition of the within action, and

In said proceeding the plaintiff appearing by and through one of its attorneys, Terence P. Stewart, the defendants appearing by and through one of its attorneys, Sidney Weiss, and China National Native Produce and Animal By-Products Import and Export Corp. appearing by and through one of its attorneys, Don Cuneo, and

It appearing to the court that the plaintiff has failed to demonstrate any irreparable injury resulting from the denial of its application for a temporary restraining order in that any reference with respect thereto by plaintiff's counsel has only been of a speculative nature, and as expressly stated by plaintiff's counsel most difficult to quantify, and

It further appearing that in the present opinion of this court the plaintiff has not demonstrated a reasonable likelihood of prevailing on the merits of the action in that a determination in favor of the plaintiff on the merits would result in this court creating a new cause of action under 19 U.S.C. 1581(i), as added by the Customs Court Act of 1980, contrary to congressional intent, and

By reason of the foregoing this court deems it unwarranted to grant the extraordinary remedy afforded by a Temporary Restraining Order, now therefore, it is hereby

ORDERED that the application of the plaintiff for a temporary restraining order in the above-entitled action be and is hereby denied, and it is further

ORDERED that the defendants and any intervenors shall serve and submit to plaintiff's counsel their respective responses and accompanying briefs on plaintiff's motion for a preliminary injunction on or before Friday, January 23, 1981, and it is further

ORDERED that a hearing on plaintiff's motion for a preliminary injunction in the above-entitled action shall be held at the courthouse of the U.S. Court of International Trade in courtroom No. 3 thereof commencing at the hour of 10 a.m. on Tuesday, January 27, 1981.

(Slip Op. 81-8)

ALL CHANNEL PRODUCTS CORP., PLAINTIFF, *v.* UNITED STATES, DEFENDANT

Consolidated Court No. 77-5-00798

Decision

CLASSIFICATION—SWITCHES WITH ATTACHED WIRES

Articles consisting of switches and attached wires, used as parts of television antennas, were not properly classified or adequately described as switches under item 685.90 of the TSUS. The wires serve to provide variations in inductance, a function which is not the opening or closing of electrical circuits, but a distinct function related to the reception of television signals. The proper classification is as parts of television apparatus under item 685.20.

[Judgment for plaintiff.]

(Decided January 16, 1981)

Shaw and Stedina (*Charles P. Deem* of counsel) for the plaintiff.

Alice Daniel, Assistant Attorney General; *Joseph I. Liebman*, Attorney in Charge, International Trade Field Office, Commercial Litigation Branch (*Robert H. White* of counsel) for the defendant.

WATSON, Judge: In this consolidated action, the imported articles consist of switches of assorted types to which various lengths of wire are attached. They are chiefly used in the manufacture of indoor television antennas.

Most of the merchandise was classified under item 685.90 of the TSUS, as switches.[1] For five entries that were classified otherwise,[2] the Government conceded error and stated a claim for classification as switches.

---

[1] 685.90 Electrical switches, relays, fuses, lightning arresters, plugs, receptacles, lamp sockets, terminals, terminal strips, junction boxes and other electrical apparatus for making or breaking electrical circuits, for the protection of electrical circuits, or for making connections to or in electrical circuits; switchboards (except telephone switchboards) and control panels; all the foregoing and parts thereof * * * 8.5% ad val.

[2] The articles covered by entry Nos. 236598, 254449, 240232, 244903 and 307440 were classified as insulated electrical conductors under item 688.15 which reads as follows:

688.15 Insulated (including enamelled or anodized) electrical conductors, whether or not fitted with connectors (including ignition wiring sets, Christmas tree lighting sets with or without their bulbs, and other wiring sets):

* * * * * * *

With fittings:

* * * * * * *

Other ..... 8.5% ad val

Plaintiff claims classification under item 685.20[3] as parts of television apparatus in accordance with the chief use, as parts of television antennas.

The dispute centers on the function of the additional wires. The rotary switch portions have already been held to be switches within the meaning of item 685.90[4]

In the finished antenna, the wires connect the switch to the characteristic metal dipoles or loops which are the principal signal reception parts of the antenna. If that was the only purpose of the wires, the court might consider them inconsequential in the determination of the classification of this article. The wires would be minor, subsidiary portions and the switch itself would clearly be the only object of significance, or if "switch" was perhaps too restrictive a term to describe the entire importation, it would nevertheless be described as "other electrical apparatus for making or breaking electrical circuits," and it would still be classifiable within item 685.90.[5]

However, the testimony of plaintiff's witnesses established that the wires have the function of providing a variety of inductances for tuning; that is to say, according to the various combination in which they are selected by the switch, the sensitivity of the antenna to the signal is modified to a significant degree. The wires, therefore, notwithstanding their unprepossessing appearance, have a definite function which has nothing to do with the making or breaking of circuits, but is an outgrowth of their intrinsic resistance to the passage of electricity.

As an example, in exhibit 22, plaintiff's witness, Von Recklinghausen, analyzed the imported model No. 100 and diagramed 12 possible variations in inductance based on the attached wires. The same analysis was made for the other models, and the only differences are that in those with a two-position switch, the variations are limited to two. In function, the wires play the same role in all the importations.

---

[3] Radiotelegraphic and radiotelephonic transmission and reception apparatus; radiobroadcasting and television transmission and reception apparatus and television cameras; record players, phonographs, tape recorders, dictation recording and transcribing machines, record changers, and tone arms; all of the foregoing, and any combination thereof whether or not incorporating clocks or other timing apparatus, and parts thereof:

* * * * * * *

685.20 Radiotelegraphic and radiotelephonic transmission and reception apparatus; radiobroadcasting and television transmission and reception apparatus, and parts thereof:

Television apparatus and parts thereof..... 5% ad val.

[4] *Rembrandt Electronics, Inc.* v. *United States*, 64 CCPA 1, C.A.D. 1175, 542 F. 2d 1184 (1976). Portions of the trial record in that case were incorporated herein. Although the defendant suggests that some of the switches involved in that case were exactly the same as these, the decisions and record do not permit more than surmise on that point.

[5] See, *United States* v. *John V. Carr & Son, Inc.*, 61 CCPA 41, 45, C.A.D. 1116, 495 F. 2d 771 (1974).

From the standpoint of functional analysis, the importation consists of a portion that is a switch and a portion that provides variable inductance. The court believes that an object with this additional function is not accurately described as a switch or as any other electrical apparatus for making or breaking electrical circuits. To engage in an attempt to evaluate the relative importance of these two functions would be futile. What *is* important, is that the object possesses a distinct and significant part whose function is inconsistent with classification merely as a switch. As the Court of Customs and Patent Appeals has noted,[6] these are primarily matters of statutory interpretation. While no one doubts that the provision for switches will cover all forms and varieties,[7] there comes a point where the addition of parts and functions transforms the object into something else.

In this case the court finds that the importations are intermediate hybrid objects which are best treated in accordance with their use and most accurately described as parts of television apparatus. In their condition as imported. they are not articles within the common meaning of switches, and the testimony established that they are not normally sold or considered as such in the trade.[8]

The case of *Craig Corporation* v. *United States*, 75 Cust. Ct. 161, C.D. 4822 (1975) offers an instructive contrast to this case. In *Craig*, supra, the court held that foot switches for tape recorders were properly classifiable as switches even though they had, in addition to the actual switch, such parts as a housing, a pedal, springs, an electrical cord, and a strain device for the cord. The court reasoned that the paraphernalia were all solely related to the switch function. Here, the wires have an inductance function, which is a distinct and significant additional characteristic, and does not serve the switch function of making and breaking circuits.

For the reasons expressed above, the proper classification of these articles is as parts of television apparatus under item 685.20, dutiable at the rate of 5 percent ad valorem.

Judgment will enter accordingly.

---

[6] *Englishtown Corporation* v. *United States*, 64 CCPA 84, C.A.D. 1187, 553 F. 2d 1250 (1977).
[7] *Nootka Packing Co.* v. *United States*, 22 CCPA 464, T.D. 47464 (1935).
[8] The invoicing of these importations is considered to be without significance by the court.

Decisions of the United States Court of International Trade

Abstracts

Abstracted Protest Decisions

DEPARTMENT OF THE TREASURY, *January 19, 1981.*

The following abstracts of decisions of the United States Court of International Trade at New York are published for the information and guidance of officers of the customs and others concerned. Although the decisions are not of sufficient general interest to print in full, the summary herein given will be of assistance to customs officials in easily locating cases and tracing important facts.

ROBERT E. CHASEN,
Commissioner of Customs.

DECISION NUMBER	JUDGE & DATE OF DECISION	PLAINTIFF	COURT NO.	ASSESSED	HELD	BASIS	PORT OF ENTRY AND MERCHANDISE
				Par. or Item No. and Rate	Par. or Item No. and Rate		
P81/7	Watson, J. January 13, 1981	American Hoechst Corp. et al.	71-6-00276, etc.	Item 409.00 7¢ per lb. + 45%; 6.3¢ per lb. + 40%; 5.5¢ per lb. + 36%; 4.9¢ per lb. + 31%	Item 406.70 40%, 36%, 32%, 28%, 24% or 20%	Agreed statement of facts	New York Colors, lakes or toner used only as coloring agents

best copy available

P81/8	Watson, J. January 13, 1981	Joseph Markovits, Inc.	74-1-00263	Item 748.20 21%	Item 774.60 8.5%	Armbee Corporation et al. v. U.S. (C.D. 3278) First American Artificial Flowers, Inc. v. U.S. (C.D. 4185) Joseph Markovits, Inc. v. U.S. (C.D. 4396)	New York Artificial flowers, etc., in c.v. of plastic
P81/9	Watson, J. January 13, 1981	Bernard Schwartz & Co.	72-4-00844, etc.	Item 748.20 22%	Item 774.60 10%	Armbee Corporation et al. v. U.S. (C.D. 3278) First American Artificial Flowers Inc. v. U.S. (C.D. 4185) Joseph Markovits, Inc. v. U.S. (C.D. 4396)	New York Artificial flowers etc., in c.v. of plastic
P81/10	Newman, J. January 13, 1981	Pussy Cat Toy Co., Inc.	79-6-00972	Item 737.25 28%	Item 737.30 9%	Agreed statement of facts	New York Stuffed toy hugging dogs

Decisions of the United States Court of International Trade

Abstracts

Abstracted Reappraisement Decisions

DECISION NUMBER	JUDGE & DATE OF DECISION	PLAINTIFF	COURT NO.	BASIS OF VALUATION	HELD VALUE	BASIS	PORT OF ENTRY AND MERCHANDISE
R81/16	Newman, J. January 13, 1981	Charmilles Corp. of America	72-2-00378	U.S. value	Determined by adding to f.o.b. unit invoice price in Swiss francs converted to a dollar value at rate of exchange in effect at time of entry (the claimed value), 53% of difference between claimed value and appraised value	Agreed statement of facts	New York Machine tools, accessories and parts
R81/17	Newman, J. January 13, 1981	Charmilles Corp. of America	79-2-00314	U.S. value	Determined by adding to f.o.b. unit invoice price in Swiss francs converted to a dollar value at fixed rate	Agreed statement of facts	New York Machine tools, accessories and parts

						of exchange as shown on special customs invoice in entry documents (the claimed value), 53% of difference between claimed value and appraised value		
R81/18	Newman, J. January 13, 1981	Charmilles Corp. of America	79-7-01900	U.S. value		Determined by adding to f.o.b. unit invoice price in Swiss francs converted to a dollar value at fixed rate of exchange as shown on special customs invoice in entry documents (the claimed value), 53% of difference between claimed value and appraised value	Agreed statement of facts	New York Machine tools, accessories and parts
R81/19	Newman, J. January 13, 1981	John A. Conkey et al.	77782-A, etc.	Export value		F.o.b. unit invoice prices plus 20% of difference between f.o.b. unit invoice prices and appraised values	Agreed statement of facts	Boston Wool hooked rugs, wool tube mats, etc.
R81/20	Newman, J. January 13, 1981	Niehimen Co., Inc.	R82/15857, etc.	Export value		F.o.b. unit invoice prices plus 20% of difference between f.o.b. unit invoice prices and appraised values	Agreed statement of facts	Los Angeles Sewing machine heads

DECISION NUMBER	JUDGE & DATE OF DECISION	PLAINTIFF	COURT NO.	BASIS OF VALUATION	HELD VALUE	BASIS	PORT OF ENTRY AND MERCHANDISE
R81/21	Newman, J. January 13, 1981	Trans-Ocean Import Co., Inc.	R66/25471, etc.	Export value	F.o.b. unit invoice prices plus 20% of difference between f.o.b. unit invoice prices and appraised values	Agreed statement of facts	Philadelphia Hooked rugs, tube mats, etc.
R81/22	Watson, J. January 15, 1981	Conti Rubber Products, Inc.	76-3-00756	Foreign value	Claimed unit values (all in Deutsche mark) listed on schedule attached to decision and judgment	Agreed statement of facts	Norfolk Various automotive tires
R81/23	Watson, J. January 15, 1981	Conti Rubber Products, Inc.	78-8-01532	Foreign value	Claimed unit values (all in Deutsche mark) listes on schedule attached to decision and judgment	Agreed statement of facts	New York Various automotive tires
R81/24	Watson, J. January 15, 1981	Conti Rubber Products, Inc.	78-12-02328, etc.	Foreign value	Claimed unit values (all in Deutsche mark) listed on schedule attached to decision and judgment	Agreed statement of facts	Chicago Various automotive tires
R81/25	Newman, J. January 15, 1981	Antonia Realty & Warehousing Corp.	75-5-01021, etc.	Foreign value	Claimed unit values (all in Deutsche mark) listed on schedule attached to decision and judgment	Agreed statement of facts	New York Various automotive tires

R81/26	Newman, J. January 15, 1981	Antonia Realty & Warehousing Corp.	76-2-00449	Foreign value	Claimed unit values (all in Deutsche mark) listed on schedule attached to decision and judgment	Agreed statement of facts	San Francisco Various automotive tires
R81/27	Newman, J. January 15, 1981	Conti Rubber Products, Inc.	75-4-00867	Foreign value	Claimed unit values (all in Deutsche mark) listed on schedule attached to decision and judgment	Agreed statement of facts	New York Various automotive tires
R81/28	Newman, J. January 15, 1981	Conti Rubber Products, Inc.	76-2-00450	Foreign value	Claimed unit values (all in Deutsche mark) listed on schedule attached to decision and judgment	Agreed statement of facts	San Francisco Various automotive tires
R81/29	Newman, J. January 15, 1981	Conti Rubber Products, Inc.	76-3-00871	Foreign value	Claimed unit values (all in Deutsche mark) listed on schedule attached to decision and judgment	Agreed statement of facts	New York Various automotive tires
R81/30	Boe, J. January 15, 1981	Antonia Realty & Warehousing Corp.	74-10-02699	Foreign value	Claimed unit values (all in Deutsche mark) listed on schedule attached to decision and judgment	Agreed statement of facts	New York Various automotive tires
R81/31	Boe, J. January 15, 1981	Antonia Realty & Warehousing Corp. Conti Rubber Products Inc.	74-5-01413	Foreign value	Claimed unit values (all in Deutsche mark) listed on schedule attached to decision and judgment	Agreed statement of facts	Jacksonville (Tampa) Various automotive tires

DECISION NUMBER	JUDGE & DATE OF DECISION	PLAINTIFF	COURT NO.	BASIS OF VALUATION	HELD VALUE	BASIS	PORT OF ENTRY AND MERCHANDISE
R81/32	Boe, J. January 15, 1981	Conti Rubber Products Inc.	74-7-01788, etc.	Foreign value	Claimed unit values (all in Deutsche mark) listed on schedule attached to decision and judgment	Agreed statement of facts	Los Angeles Various automotive tires
R81/33	Boe, J January 15, 1981	Conti Rubber Products Inc.	74-11-03184, etc.	Foreign value	Claimed unit values (all in Deutsche mark) listed on schedule attached to decision and judgment	Agreed statement of facts	Jacksonville (Tampa) Various automotive tires

Appeal to U.S. Court of International Trade

Appeal 81–6.—United States *v.* J. E. Mamiye & Sons, Inc.—Tote Bags—Articles of Textile Materials—Handbags or Luggage of Textile Materials—TSUS—Appeal from C.D. 4878.

In this case certain tote bags were classified under item 389.60, or renumbered item 389.62, Tariff Schedules of the United States, as modified by T.D. 68–9, as articles of textile materials, and assessed with duty at 25 cents per pound plus 15 per centum ad valorem. Plaintiff-appellee claimed that the merchandise was properly dutiable at 20 percent as handbags or, alternatively, as luggage of textile materials as provided for under item 706.24, as modified by T.D. 68–9. The Customs Court held that the tote bags were used primarily by women as handbags, as defined in headnote 2(b), schedule 7, part 1, subpart D, TSUS, and were properly dutiable as handbags as claimed by plaintiff. In view of its conclusions, the court did not consider the luggage issue.

In its notice of appeal defendant-appellant states it is dissatisfied with the decision and judgment of the court and requests the court of appeals, pursuant to sections 1541(a) and 2601 (a) and (b), title 28, United States Code, to review the questions involved therein and to grant such relief in the premises as to the court shall seem just.

Recent Unpublished Customs Service Decisions

The following listing of recent administrative decisions issued by the Office of Regulations and Rulings, U.S. Customs Service, and not otherwise published, is published for the information of Customs officers and the importing community. Although the decisions are not of sufficient general interest to warrant publication as Treasury decisions, the listing describes the issues involved and is intended to aid Customs officers and concerned members of the public in identifying matters of interest which recently have been considered by the Office of Regulations and Rulings.

A copy of any decision included in this listing, identified by its date and file number, may be obtained in a form appropriate for public distribution upon written request to the Office of Regulations and Rulings, attention: Legal Reference Area, room 2404, U.S. Customs Service, 1301 Constitution Avenue N.W., Washington, D.C. 20229. These copies will be made available at a cost to the requester of 10 cents per page. However, the Customs Service will waive this charge if the total number of pages copied is 10 or less.

Decisions listed in earlier issues of the CUSTOMS BULLETIN, through December 8, 1980 are available in microfiche format at a cost of $27.15 (15 cents per sheet of fiche). It is anticipated that additions to the microfiche will be made quarterly and subscriptions are available. Requests for the microfiche now available and for subscriptions should be directed to the Legal Reference Area. Subscribers will automatically receive updates as they are issued and will be billed accordingly.

Dated: January 27, 1981.

B. JAMES FRITZ,
Director,
Regulations and Information Division.

Date of decision	File No.	Issue
11-21-80	104921	Vessels: Vessel repair duty accruing under 19 U.S.C. 1466 on emergency repairs performed in Canada
1- 7-81	104945	Containers: Classification of bulk liquid bags as instruments of international traffic
1- 7-81	104946	Vessels: Use of Canadian built and registered vessel in salvage operations conducted within U.S. waters near the United States-Canadian boundary

Date of decision	File No.	Issue
12-17-80	104952	Vessels: Relief from duty under 19 U.S.C. 1466 on the cost of vessel repairs
1-12-81	104973	Vessels: Use of foreign-built hovercraft as a training vessel for the U.S. Navy
12- 3-80	710465	Entry: Enforcement of International Trade Commission exclusion order on doxycycline
12-13-80	713586	Country of origin marking: Gas cylinder caps
1- 7-81	714074	Country of origin marking: Ball bearings
12-16-80	714246	Country of origin marking: Imported articles featuring the word American in the trademark and trade name
12-18-80	061748	Classification: Metal flower and beach baskets containing candy dutiable as part of the value of the candy (157.10)
12-19-80	061773	Classification: American selling price: footwear (700.60)
12- 9-80	062739	Classification: Aluminum smelting plant components
12- 9-80	063829	Classification: Thrust bearing assembly used conjunctively with an antenna mast support (657.40)
11-25-80	064722	Classification: Cordless electric feed cart (666.00)
12- 4-80	064941	Classification: Men's and women's ski wear (380.00, 380.04, 380.12, 380.39, 380.84, 382.00, 382.04, 382.33, 382.81)
1- 6-81	065045	Classification: Toy bartender figure with electric motor (737.95)
12-31-80	065525	Classification: Women's knit wool underwear (378.05)
12- 9-80	065636	Classification: Metal fastner or cotter (646.42)
12-17-80	065649	Classification: Metal trademark label as ornamentation
12-18-80	065676	Classification: Electrically powered passenger transportation train (690.10)
12-18-80	065693	Classification: Life vests (790.39)
12-18-80	065704	Classification: Self-adhesive hook (772.15, 774.55)
12-10 80	065771	Classification: Seamless alloy steel boiler tubes (606.00, 606.02, 610.52)
8- 7-80	066088	Classification: Criterion to establish classification of portable electric typewriters
12-18-80	066150	Classification: Lead oxide material derived from lead batteries (603.50, 624.03)
12- 9-80	066228	Classification: Agricultural conveyor belts (358.16, 666.00, 870.45)
12-19-80	066247	Classification: Hygienic disposable mop components (772.15, 772.35, 774.55, 389.62, 657.40)
10-30-80	066254	Classification: Denim pants (382.00)
12-18-80	066581	Classification: Hooded one-piece rubberized snowsuit (376.56)
12- 9-80	066659	Classification: Milk replacer products (183.05)
12- 4-80	066685	Classification: Toy pinching device (737.95)
12-18-80	066756	Classification: Soft drink maker (654.01, 772.15)
12-11-80	066763	Classification: Aquadrive system to reduce noise and vibration in boat engines (680.95)
12- 4-80	066765	Classification: Steel keyring assembly (657.25)
12-18-80	066770	Classification: Polyester braided rope (348.00)
12- 9-80	066866	Classification: Polyester knit fabric golf cap (703.05)

International Trade Commission Notices

Investigations by the United States International Trade Commission

DEPARTMENT OF THE TREASURY

The appended notices relating to investigations by the U.S. International Trade Commission are published for the information of Customs Officers and others concerned.

R. E. CHASEN,
Commissioner of Customs.

In the Matter of CERTAIN SURFACE GRINDING MACHINES AND LITERATURE FOR THE PROMOTION THEREOF	Investigation No. 337-TA-95

Notice of Investigation

AGENCY: U.S. International Trade Commission.

ACTION: Institution of investigation pursuant to 19 U.S.C. 1337.

SUMMARY: Notice is hereby given that a complaint was filed with the U.S. International Trade Commission on December 15, 1980, under section 337 of the Tariff Act of 1930 (19 U.S.C. 1337), on behalf of Brown and Sharpe Mfg. Co., Precision Park, North Kingstown, R.I. 02852. The complaint alleges unfair methods of competition and unfair acts in the importation of certain surface grinding machines and literature for the promotion thereof into the United States, or in their sale, by reason of copyright and trademark infringement, palming off, reverse palming off, false designation of origin, trade libel, and misappropriation of trade dress and trade name, the effect or tendency of which is to destroy or substantially injure an industry, efficiently and economically operated, in the United States.

The complainant requests that, during the investigation, a temporary exclusion of the imports in question be ordered and that, after a full investigation, a permanent exclusion order and cease and desist order be issued by the Commission.

AUTHORITY: The authority for institution of this investigation is contained in section 337 of the Tariff Act of 1930 (19 U.S.C. 1337) and in section 210.12 of the Commission's Rules of Practice and Procedure.

SCOPE OF THE INVESTIGATION: Having considered the complaint, the U.S. International Trade Commission, on January 14, 1981, ordered that—

(1) Pursuant to subsection (b) of section 337 of the Tariff Act of 1930 (19 U.S.C. 1337(b)), an investigation be instituted to determine whether there is reason to believe there is a violation and whether there is a violation of subsection (a) of section 337 in the unlawful importation of certain surface grinding machines and literature for the promotion thereof into the United States, or in their sale, by reason of copyright and trademark infringement, palming off, reverse palming off, false designation of origin, trade dress and trade name, the effect or tendency of which is to destroy or substantially injure an industry efficiently and economically operated, in the United States;

(2) For the purpose of this investigation so instituted, the following are hereby named as parties upon which this notice of investigation shall be served:

(a) The complainant is—

Brown & Sharpe Mfg. Co.
Precision Park
North Kingstown, R.I. 02852

(b) The respondents are the following companies allegedly engaged in the unlawful importation of such articles into the United States, or in their sale, and are parties upon which the complaint is to be served:

Lian Feng Machine Co.
93 Chung Shan Road
Fengyuan/Taiwan 420 R.O.C.

Jet Equipment and Tool
1901 Jefferson Avenue
Tacoma, Wash. 98402

Ramco Machinery Sales
16128 Ledwell Street
Van Nuys, Calif. 91406

Jones and Henry Tool Co.
2910 South Santa Fe Avenue
Los Angeles, Calif. 90058

Langford Machinery
1516 South Grand Avenue
Santa Ana, Calif. 92705

Performance Machine Tool
101 Timberline Court
Danville, Calif. 94526

Cactus State Machinery
2737 West McDowell
Phoenix, Ariz. 85009

Sigma Machinery Inc.
8230 Haskell Avenue
Van Nuys, Calif. 91406

Select Machine Tool and Supply Co.
7606 South Ramis Street
Bellgarden, Calif. 90202

Cassiere Machinery Company
145 Crary Street
Providence, R.I. 02903

KBC Machinery
6300 Eighteen Mile Road
Sterling Heights, Mich. 48077

Ralmike's Tool-A-Rama
4405 South Clinton Avenue
South Plainfield, N.J. 07080

Bob's Machinery Sales
1221 East 9 Mile Road
Ferndale, Mich. 48220

Although listed as a proposed respondent in the complaint, H. Leach Machinery Co. has not been named a party respondent in this investigation because that firm has entered into a settlement agreement with the complainant which provides that Leach will cease and desist from the importation and sale of surface grinding machines manufactured by Lian Feng.

(c) For the purpose of the investigation so instituted, Louis S. Mastriani, U.S. International Trade Commission, 701 E Street NW., Washington, D.C. 20436, is hereby named Commission investigative attorney, a party to this investigation; and

(3) For the investigation so instituted, Donald K. Duvall, Chief Administrative Law Judge, U.S. International Trade Commission, 701 E Street NW., Washington, D.C. 20436, shall designate the presiding officer.

SUPPLEMENTARY INFORMATION: Responses must be submitted by the named respondents in accordance with section 210.21 of the Commission's Rules of Practice and Procedure (19 CFR 210.21).

Pursuant to sections 201.16(d) and 210.21(b) of the rules, such responses will be considered by the Commission if received not later than twenty (20) days after the date of service of the complaint. Extensions of time for submitting a response will not be granted unless good and sufficient cause therefor is shown.

Failure of a respondent to file a timely response to each allegation in the complaint and in this notice may be deemed to constitute a waiver of the right to appear and contest the allegations of the complaint and this notice, and to authorize the presiding officer and the Commission, without further notice to the respondent, to find the facts to be as alleged in the complaint and this notice and to enter both a recommended determination and a final determination containing such findings.

The complaint, except for any confidential information contained therein, is available for inspection during official working hours (8:45 a.m. to 5:15 p.m.) in the Office of the Secretary, U.S. International Trade Commission, 701 E Street NW., Washington, D.C. 20436, telephone 202–523–0161.

FOR FURTHER INFORMATION CONTACT: Louis S. Mastriani, Commission investigative attorney, Unfair Import Investigations Division, U.S. International Trade Commission, telephone 202–523–0489.

By order of the Commission.

Issued: January 16, 1981.

KENNETH R. MASON,
Secretary.

In the Matter of CERTAIN HEADBOXES AND PAPERMAKING MACHINE FORMING SECTIONS FOR THE CONTINUOUS PRODUCTION OF PAPER, AND COMPONENTS THEREOF	Investigation No. 337–TA–82

Commission Hearing on the Presiding Officer's Recommendation and on Relief, Bonding, and the Public Interest, and the Schedule for Filing Written Submissions

AGENCY: U.S. International Trade Commission.

ACTION: The scheduling of oral arguments and briefing for investigation No. 337–TA–82, certain headboxes and papermaking machine forming sections for the continuous production of paper, and components thereof.

Notice is hereby given that the presiding officer has issued a recommended determination that there is a violation of section 337 of the Tariff Act of 1930 (19 U.S.C. 1337) in the unauthorized importation into the United States and sale of the headboxes and papermaking machine forming sections for the continuous production of paper, and components thereof, which are the subject of the Commission's investigation. Accordingly, the recommended determination and the record of the hearing have been certified to the Commission for review and a Commission determination. Interested persons may obtain copies of the nonconfidential version of the presiding officer's recommendation (and all other public documents on the record of the investigation) by contacting the Office of the Secretary, U.S. International Trade Commission, 701 E Street NW., Room 161, Washington, D.C. 20436; telephone 202–523–0161.

COMMISSION HEARING: The Commission will hold a public hearing on February 24, 1981, in the Commission's Hearing Room, 701 E Street NW., Washington, D.C. 20436, beginning at 10 a.m. The hearing will be divided into two parts. First, the Commission will hear oral arguments on the presiding officer's recommended determination that a violation of section 337 of the Tariff Act of 1930 exists. Second, the Commission will hear presentations concerning appropriate relief, the effect that such relief would have upon the public interest, and the proper amount of the bond during the Presidential review period, in the event that the Commission determines that there is a violation of section 337. These matters will be heard on the same day in order to facilitate the completion of this investigation within time limits established under law and to minimize the burden of this hearing upon the parties. The procedure for each portion of the hearing follows.

ORAL ARGUMENTS: Any party to the Commission's investigation or any interested Government agency may present an oral argument concerning the presiding officer's recommended determination. Such arguments will be limited to 30 minutes. Each party or interested agency may reserve 10 minutes of its allotted time for rebuttal. The oral arguments will be held in the following order: complainant, respondents, interested agencies, and the Commission investigative attorney. Any rebuttals will be held in this order: respondents, complainant, interested agencies, and the Commission investigative attorney.

ORAL PRESENTATIONS ON RELIEF, BONDING, AND THE PUBLIC INTEREST: If the Commission finds that a violation of section 337 has occurred, it may issue (1) an order which could result in the exclusion of the subject articles from entry into the United States or (2) an order which could result in the respondents being

required to cease and desist from engaging in unfair methods of competition or unfair acts in the importation and sale of such articles. Accordingly, the Commission is interested in hearing presentations which address the form of relief, if any, which should be ordered.

If the Commission finds that a violation of section 337 has occurred and orders some form of relief, the President has 60 days to approve or disapprove the Commission's action. During this period, the subject articles would be entitled to enter the United States under a bond in an amount determined by the Commission and prescribed by the Secretary of the Treasury. The Commission is therefore interested in hearing presentations concerning the amount of the bond, if any, which should be imposed.

If the Commission concludes that a violation of section 337 has occurred and orders some form of relief, it must consider the effect of that relief upon the public interest. The factors which the Commission will consider include the effect that an exclusion order or a cease and desist order would have upon (1) the public health and welfare, (2) competitive conditions in the U.S. economy, (3) the U.S. production of articles which are like or directly competitive with those which are the subject of the investigation, and (4) U.S. consumers.

Following the oral arguments on the presiding officer's recommendation, parties to the investigation, interested agencies, public interest groups, or any interested members of the public may make oral presentations on the issues of relief, bonding, and the public interest. Such presentations will be limited to 15 minutes. Participants will be given an additional 5 minutes for closing arguments after all presentations have been concluded. The Commission investigative attorney will be allotted the full time available to a party. Oral presentations on relief, bonding, and the public interest will be heard in the same order as oral arguments on the recommended determination.

WRITTEN SUBMISSIONS: In order to give greater focus to the hearing, the parties to the investigation, interested agencies, and the Commission investigative attorney are encouraged to file briefs on the issues of violation (to the extent they have not already briefed that issue in their written exceptions to the presiding officer's recommended determination), remedy, bonding, and the public interest. Such briefs must be filed not later than the close of business on February 17, 1981. During the course of the hearing, the parties may be asked to file posthearing briefs.

NOTICE OF APPEARANCE: Written requests to appear at the Commission hearing must be filed with the Office of the Secretary by February 17, 1981.

ADDITIONAL INFORMATION: The original copy and 19 true copies of all briefs and written comments must be filed with the Office of the Secretary not later than February 17, 1981. Any person desiring to discuss confidential information, or to submit a document (or a portion thereof) to the Commission in confidence, must request in camera treatment unless the information has already been granted such treatment by the presiding officer. All such requests should be directed to the Secretary to the Commission and must include a full statement of the reasons why the Commission should grant such treatment. Documents or arguments containing confidential information approved by the Commission for in camera treatment will be treated accordingly. All nonconfidential written submissions will be available for public inspection at the Secretary's Office.

Notice of this investigation was published in the Federal Register of April 8, 1980 (45 F.R. 23832).

FOR FURTHER INFORMATION CONTACT: Phyllis N. Smithey, Esq., Office of the General Counsel, Room 224, U.S. International Trade Commission; telephone 202–523–0321.

By order of the Commission.

Issued: January 12, 1981.

KENNETH R. MASON,
Secretary.

In the Matter of
CERTAIN MODULAR PUSHBUTTON SWITCHES AND COMPONENTS THEREOF

Investigation No. 337–TA–96

Notice of Investigation

AGENCY: U.S. International Trade Commission.

ACTION: Institution of investigation pursuant to 19 U.S.C. 1337.

SUMMARY: Notice is hereby given that a complaint was filed with the U.S. International Trade Commission on December 15, 1980, under section 337 of the Tariff Act of 1930 (19 U.S.C. 1337), on behalf of ITT Schadow, Inc., 8081 Wallace Road, Eden Prairie, Minn. 55344. The complaint alleges unfair methods of competition and unfair acts in the importation of certain modular pushbutton switches and components thereof into the United States, or in their sale, because such pushbutton switches are alleged to infringe claims 1, 10, and 14 of U.S. Letters Patent Re 27,963 and claims 1 through 4, 7, 11, and 12 of U.S. Letters Patent 4,044,213. Moreover, the complaint alleges that the effect or tendency of the unfair methods of competition and unfair

acts is to substantially injure an industry, efficiently and economically operated, in the United States.

Complainant requests the Commission, following a full investigation, to order permanent exclusion from entry into the United States of the articles in question, to order the below identified respondents to cease and desist the unlawful acts recited herein and to provide such other relief as the Commission deems appropriate.

AUTHORITY: The authority for institution of this investigation is contained in section 337 of the Tariff Act of 1930 (19 U.S.C. 1337) and in section 210.12 of the Commission's Rules of Practice and Procedure (19 CFR 210.12).

SCOPE OF THE INVESTIGATION: Having considered the complaint, the U.S. International Trade Commission, on January 14, 1981 ordered that—

(1) Pursuant to subsection (b) of section 337 of the Tariff Act of 1930 (19 U.S.C. 1337), an investigation be instituted to determine whether there is a violation of subsection (a) of section 337 in the unlawful importation of certain modular pushbutton switches and components thereof into the United States, or in their sale, by reason of such switches' allegedly infringing claims 1, 10, and 14 of U.S. Letters Patent Re 27,963 and claims 1 through 4, 7, 11, and 12 of U.S. Letters Patent 4,044,213, the effect or tendency of which is to substantially injure an industry, efficiently and economically operated, in the United States;

(2) For the purpose of this investigation so instituted, the following are hereby named as parties upon which this notice of investigation shall be served:

(a) The complainant is—

ITT Schadow, Inc.
8081 Wallace Road
Eden Prairie, Minn. 55344

(b) The respondents alleged to be engaged in the importation into, or sale in, the United States of articles allegedly infringing claims 1 through 4, 7, 11, and 12 of U.S. Letters Patent 4,044,213 are:

Hosiden Company, Ltd.
4-33-1 Chrome Kitakuhoji
Yao City
Osaka, Japan

Hosiden Company
311 Lively Boulevard
Elk Grove Village, Ill. 60007

(c) The respondents in paragraph (b) above and the following additional respondents are alleged to be engaged in the importation into, or sale in, the United States of articles allegedly infringing claims 1, 10, and 14 of U.S. Letters Patent Re 27,963:

Electronic Components Groupe
26 North Fifth Street
Minneapolis, Minn. 55403

Tanaka Electronics, Inc., Ltd.
1-20-53 Kawara Zone
Koshigaya Samitama Pref. Japan

Toneluck Electronics Industrial Co., Ltd.
F Tat Factory, Flat B, 23/F
4 Heung Yip Road
Wong Chuck Fang, Hong Kong

Seewold Company
55 Reservation Road
Andover, Mass. 01810

(d) The complaint is to be served on all of the above identified respondents, and

(e) For the purpose of the investigation so instituted, John Milo Bryant, U.S. International Trade Commission, 701 E Street NW., Washington, D.C. 20436, is hereby named Commission investigative attorney, a party to this investigation; and

(3) For the investigation so instituted, Donald K. Duvall, Chief Administrative Law Judge, U.S. International Trade Commission, 701 E Street NW., Washington, D.C. 20436, shall designate the presiding officer.

SUPPLEMENTARY INFORMATION: Responses must be submitted by the named respondents in accordance with section 210.21 of the Commission's Rules of Practice and Procedure (19 CFR 210.21). Pursuant to sections 201.16(d) and 210.21(b) of the rules, such responses will be considered by the Commissiom if received not later than 20 days after the date of service of the complaint. Extensions of time for submitting a response will not be granted unless good and sufficient cause therefor is shown.

Failure of a respondent to file a timely response to each allegation in the complaint and in this notice may be deemed to constitute a waiver of the right to appear and contest the allegations of the complaint and this notice, and to authorize the presiding officer and the Commission, without further notice to the respondent, to find the facts to be as alleged in the complaint and this notice and to enter both a recommended determination and a final determination containing such findings.

The complaint, except for any confidential information contained therein, is available for inspection during official working hours (8:45 a.m. to 5:15 p.m.) in the Office of the Secretary, U.S. International Trade Commission, 701 E Street NW., Washington, D.C. 20436; telephone 202-523-0161.

FOR FURTHER INFORMATION CONTACT: John Milo Bryant, Commission investigative attorney, Unfair Import Investigations Division, U.S. International Trade Commission; telephone 202-523-0419.

By order of the Commission.

Issued: January 19, 1981.

KENNETH R. MASON,
Secretary.

Notice

The Office of the Administrative Law Judges of the United States International Trade Commission has compiled an index digest of investigations conducted under section 337 of the Tariff Act of 1930, as amended (19 U.S.C. 1337). The index in its present form covers investigations through Inv. 337-TA-89 and is approximately 350 pages in length. We expect to update the index by issuing supplemental pages as necessary.

We plan to make copies available to anyone interested. In order to plan for printing and microfilming, we are offering the public the opportunity to order copies in advance. We will have a limited number of copies for sale, in addition to those ordered in advance.

If you wish to order one or more copies, please fill in the blanks below and return *the entire notice* to the Office of the Secretary, United States International Trade Commission, 701 E Street, NW., Washington, D.C. 20436. When the index is shipped you will be billed.

Please send _____ printed copies of the index at an estimated price of $4.00 each.

Please send _____ microfiche copies of the index at an estimated price of $1.50 each.

Index

U.S. Customs Service

Treasury decisions: T.D. No.

Parts 4 and 103, Customs Regulations amended, vessel manifest filling procedure and disclosure requirements 81-19

Customs approved public gauger 81-20

Cotton, wool, and manmade fiber/restriction on entry/Taiwan 81-21

Foreign currencies: Daily rates for countries not on quarterly list/ January 12-16, 1981 81-22

Customs Service decisions: C.S.D. No.

Appeals and protests: Timeliness of protest; bulletin notice of liquidation 81-41

Bonds: Termination of liability on Customs clarification of terms 81-29

Brokers: Powers of attorney: Powers of attorney granted to employees of broker: Filing requirement 81-26

Carrier control:

Use of non-coastwise-qualified suction dredges to enlarge navigation channels 81-34

Movement of dredged material through floating pipeline; 46 U.S.C. 292 81-46

Application of coastwise laws to crane barge engaged in salvage operations 81-49

Classification:

Whether an article is ornamented in an accepted trade sense 81-37

Exterior wall finishes; application of similitude clause in item 798.00, TSUS 81-39

Collections and refunds:

Tonnage tax and light money paid on vessel exempt from such payments 81-45

Tonnage tax and light money paid on vessel exempt from such payments 81-48

Containers:

Foreign-built containers unloaded in the United States and used in domestic traffic prior to exportation 81-31

Permitted domestic movements of foreign containers; section 10.41a, Customs Regulations 81-43

Drawback:

Exportation of aircraft by entry into international traffic 81-32

"Appearing In" method as basis for claim; records of waste 81-42

Effect of machining/threading of stainless steel fittings in foreign-trade zonal country of origin marking requirements 81-44

Effect of pre-entry examination of merchandise on claims under 19 U.S.C. 1313(c) 81-47

Customs Service decisions—Continued T.D. No.
Duty assessment: Determination of appraised value as prerequisite for filing American manufacturer's petition 81-36
Entry:
Whether a parent corporation may enter merchandise consigned to its subsidiary 81-40
Whether a civil aircraft which previously received drawback is entitled to duty-free entry under the civil aircraft agreement 81-28
Regulatory revisions to power of attorney form to eliminate corporate seal requirement, certification of corporate principal and second officer's signature 81-51
Exemptions: Customs treatment of U.S. residents who own or rent vacation homes in foreign countries 81-27
Instruments of international traffic: Radioactive isotope containers 81-38
Marking: Special country of origin marking requirements; travel clock cases and dials 81-33
Value: Effect of further processing operations in intermediate country 81-35
Vessel entrance: Foreign vessels arriving from foreign or domestic ports 81-30
Vessel repairs: Dutiability of repairs covered by warranty of foreign shipyard; applicability of "one-round voyage" rule 81-50

U.S. GOVERNMENT PRINTING OFFICE : 1981

DEPARTMENT OF THE TREASURY
U.S. CUSTOMS SERVICE
WASHINGTON, D.C. 20229

OFFICIAL BUSINESS
PENALTY FOR PRIVATE USE, $300

POSTAGE AND FEES PAID
DEPARTMENT OF THE TREASURY (CUSTOMS)
(TREAS. 552)

15/7

Customs Bulletin

Regulations, Rulings, Decisions, and Notices concerning Customs and related matters

and Decisions

of the United States Court of Customs and Patent Appeals and the United States Court of International Trade

Vol. 15 FEBRUARY 18, 1981 No. 7

NEWARK PUBLIC LIBRARY
MAR 5 1981
U. S. GOVT. PUBS.
DEPOSITORY 375

This issue contains

T.D. 81-23 through 81-29
Slip Op. 81-9 and 81-10
Protest abstracts P81/11 through P81/16
Reap. abstracts R81/34 through R81/40
International Trade Commission Notices

THE DEPARTMENT OF THE TREASURY
U.S. Customs Service

T1.11/3:

NOTICE

The abstracts, rulings, and notices which are issued weekly by the U.S. Customs Service are subject to correction for typographical or other printing errors. Users may notify the U.S. Customs Service, Logistics Management Division, Washington, D.C. 20229, of any such errors in order that corrections may be made before the bound volumes are published.

For sale by the Superintendent of Documents, U.S. Government Printing Office, Washington, D.C. 20402. Price: $2.25 (single copy domestic); $2.85 (single copy foreign). Subscription price: $85.00 a year domestic; $106.25 a year foreign.

U.S. Customs Service

Treasury Decisions

(T.D. 81-23)

Bonds

Approval and discontinuance of carriers bonds, Customs form 3587

Bonds of carriers for the transportation of bonded merchandise have been approved or discontinued as shown below. The symbol "D" indicates that the bond previously outstanding has been discontinued on the month, day, and year represented by the figures which follow. "PB" refers to a previous bond, dated as represented by figures in parentheses immediately following, which has been discontinued. If the previous bond was in the name of a different company or if the surety was different, the information is shown in a footnote at the end of the list.

Dated: January 29, 1981.

Name of principal and surety	Date of bond	Date of approval	Filed with district director/area director/amount
Bulk Haulers, Inc., 27 Airport Rd., Nashua, NH; contract carrier; New Hampshire Ins. Co.	Dec. 9, 1980	Dec. 11, 1980	Portland, ME; $50,000
John V. Carr & Son, Inc., 1600 W. Lafayette, Detroit, MI; freight forwarder; St. Paul Fire & Marine Ins. Co.	Dec. 23, 1980	Dec. 24, 1980	Detroit, MI; $50,000
Compass Transportation Co., 620 "C" St., P.O. Box 81225, San Diego, CA; motor carrier; Fireman's Fund Ins. Co.	Apr. 18, 1980	Dec. 15, 1980	San Diego, CA; $50,000
Elliott Bros. Trucking Co., Inc., N. Aurora St., Easton, MD; motor carrier; Fidelity and Deposit Co. of MD D 12/17/80	June 2, 1968	June 2, 1968	Baltimore, MD; $25,000
Follrath Delivery Service, Inc., 3000 Hirsch St., Melrose Park, IL; motor carrier; National Surety Corp. D 12/8/80	Jan. 6, 1978	Feb. 9, 1978	Chicago, IL; $65,000

Name of principal and surety	Date of bond	Date of approval	Filed with district director/area director/amount
Haupt Contract Carriers, Inc., P.O. Box 1023, Wausau, WI; motor carrier; Northwestern National Ins. Co. of Milwaukee, WI	July 25, 1980	Dec. 23, 1980	Milwaukee, WI; $25,000
Jenney Freight Line, Inc., P.O. Box 50607, Tucson, AZ; motor carrier; Safeco Ins. Co. of America (PB 11/28/79) D 12/19/80 [1]	Dec. 10, 1980	Dec. 19, 1980	Nogales, AZ; $25,000
Johnson Motor Lines, Inc., 2426 N. Graham St., P.O. Box 31577, Charlotte, NC; motor carrier; Ins. Co. of North America D 12/16/80	Apr. 29, 1980	May 14, 1980	New York Seaport, NY: $25,000
K & R Delivery Inc., 255 W. Oakton, Des Plaines, IL; motor carrier; Great American Ins. Co.	Dec. 1, 1980	Dec. 19, 1980	Chicago, IL; $35,000
Kane Transfer Co., P.O. Box 7479, Baltimore, MD; motor carrier; Ins. Co. of North America (PB 5/16/68) D 12/17/80	Nov. 25, 1980	Dec. 17, 1980	Baltimore, MD; $25,000
King Van Lines, Inc., P.O. Box 18268, Wichita, KS; motor carrier; Mid-Century Ins. Co. D 12/11/80	Feb. 8, 1971	May 24, 1971	St. Louis, MO; $25,000
Mashkin Freight Lines, Inc., 64 Oakland Ave., East Hartford, CT; motor carrier; Liberty Mutual Ins. Co. D 12/5/80	Sept. 22, 1978	Sept. 22, 1978	Bridgeport, CT; $25,000
Z. H. Hurt Enterprises, d.b.a.: Mex-Cal Truckline, 1840 Harrison St., National City, CA; motor carrier; Ins. Co. of North America	Aug. 5, 1980	Dec. 15, 1980	San Diego, CA; $25,000
J.B. Montgomery, Inc., 5150 Brighton Blvd., Denver, CO; motor carrier; St. Paul Fire & Marine Ins. Co. D 12/22/80	Mar. 27, 1970	Apr. 10, 1970	Denver, CO; $25,000
North Star International Inc., 7500 24 Ave., So., Air Cargo City Bldg., Minn., MN; freight forwarder; Peerless Ins. Co.	Oct. 2, 1980	Dec. 15, 1980	Minn., MN; $50,000
Quinn Freight Lines, Inc., 1093 N. Montello St., Brockton, MA; motor carrier; Royal Indemnity Co. (PB 6/16/76) D 12/18/80 [2]	Aug. 8, 1980	Dec. 18, 1980	Boston, MA; $50,000
R.S.J. Leasing, Inc., 127-36 Northern Blvd., Flushing, NY; motor carrier; Old Republic Ins. Co. D 3/15/80	Jan. 3, 1980	Jan. 8, 1980	Newark, NJ; $50,000
Seko-Air Freight, Inc., 444 N. LaSalle St., Chicago, Ill; air freight forwarder; Great American Ins. Co.	June 26, 1980	Nov. 19, 1980	Chicago, Ill; $50,000
West Brothers Transfer & Storage, Inc., P.O. Box 6365, Raleigh, NC; motor carrier; The North River Ins. Co. D 12/19/80	Dec. 20, 1976	Mar. 3, 1977	Wilmington, NC; $25,000
Western Transportation Co., 3710 N.W. Front Ave., Portland, OR; water carrier; St. Paul Fire & Marine Ins. Co. (PB 10/17/75) D 1/1/81 [3]	Jan. 1, 1981	Jan. 1, 1981	Portland, OR; $50,000

Name of principal and surety	Date of bond	Date of approval	Filed with district director/area director/amount
Witte Transportation Co., 2481 N. Cleveland Ave., P.O. Box 43564, St. Paul, MN. motor carrier; Continental Casualty Co. D 12/10/80	Oct. 20, 1978	Mar. 6, 1979	Minn, MN; $50,000

[1] Surety is the Aetna Casualty & Surety Co.
[2] Surety is United States Fire Ins. Co.
[3] Surety is Safeco Ins. Co. of America.

(BON-3-03)

MARILYN G. MORRISON,
Director,
Carriers, Drawback and Bonds Division.

(T.D. 81-24)

Bonds

Approval and discontinuance of bonds on Customs form 7587 for the control of instruments of international traffic of a kind specified in section 10.41a of the Customs Regulations

Bonds on Customs form 7587 for the control of instruments of international traffic of a kind specified in section 10.41a of the Customs Regulations have been approved or discontinued as shown below. The symbol "D" indicates that the bond previously outstanding has been discontinued on the month, day, and year represented by the figures which follow. "PB" refers to a previous bond, dated as represented by the figures in parentheses immediately following which has been discontinued. If the previous bond was in the name of a different company or if the surety was different, the information is shown in a footnote at the end of the list.

Dated: February 2, 1981.

Name of principal and surety	Date of bond	Date of approval	Filed with district director/area director/amount
Bowater Paper Co., 1500 E. Putnam Ave., Old Greenwich, CT; Peerless Ins. Co. D 1/15/81	Jan. 15, 1975	Jan. 15, 1975	New York, NY; $10,000
Coordinated Caribbean Transport, Inc., 1533 Sunset Dr., Coral Gables, FL; Amer. Motorist Ins. Co.	Nov. 6, 1980	Nov. 25, 1980	New Orleans, LA; $10,000
The Flying Tiger Line, Inc., 7401 World Way West, P.O. Box 92935, Los Angeles, CA; St. Paul Fire & Marine Ins. Co. (PB 5/14/80) D 10/30/80	Oct. 7, 1980	Oct. 31, 1980	Los Angeles, CA; $125,000

Name of principal and surety	Date of bond	Date of approval	Filed with district director/area director/amount
Furness Interocean Corp., 444 West Ocean Blvd., Long Beach, CA; St. Paul Fire & Marine Ins. Co. D 12/23/80	Jan. 29, 1979	Feb. 2, 1979	Los Angeles, CA; $50,000
Furness Interocean Corp., 465 California St., Rm 1001, San Francisco, CA; Old Republic Ins. Co.	Dec. 1, 1980	Dec. 23, 1980	San Francisco, CA; $10,000
Mobay Chemical Corp. (Agricultural Chem. Div.), Penn Lincoln Pkwy West, Pittsburgh, PA; Ins. Co. of North Amer.	Sept. 2, 1980	Nov. 18, 1980	New Orleans, LA; $10,000
Norwegian America Line, 29 Broadway, New York, NY; Federal Ins. Co. D 12/30/80	Dec. 20, 1976	Dec. 30, 1976	New York Seaport; $10,000
Owens Corning Fiberglas Corp., Fiberglas Tower, Toledo, OH; Aetna Casualty & Surety Co.	Oct. 21, 1980	Nov. 12, 1980	Cleveland, OH; $10,000
Illva Saronno Inc., P.O. Box 400, Edison, NJ; American Motorists Ins. Co.	Nov. 24, 1980	Nov. 26, 1980	New York, NY; $10,000
SEAPAC Container Service, Inc., 433 Hegenberger Rd., Oakland, CA; SAFECO Ins. Co. of America	Dec. 29, 1980	Dec. 30, 1980	San Francisco, CA; $10,000
Seatrain Lines Inc., and its subs. Seatrain Intermodal Services Corp., Seatrain Pacific Services Inc., Port Seatrain, Weehawken, NJ; St. Paul Fire & Marine Ins. Co. D 1/15/81	Jan. 15, 1979	Feb. 8, 1979	New York, NY; $10,000
Seatrain Lines of P.R., Inc., P.O. Box 4552, San Juan, PR; St. Paul Fire & Marine Ins. Co. D 11/22/80	Nov. 22, 1968	Nov. 27, 1968	San Juan, PR; $10,000
Shinko Bokei Co., Ltd., 3-14 Udagawa-cho, Shibuya-ku, Tokyo, Japan; American Motorist Ins. Co. D 2/12/81	Jan. 14, 1980	Jan. 14, 1980	New York Seaport; $10,000
Standard Coosa Thatcher Co., Box 791, Chattanooga, TN: American Motorists Ins. Co. D 1/2/81	Nov. 5, 1979	Nov. 6, 1979	New Orleans, LA; $10,000
Star Kist Foods, Inc., 582 Tuna St., Terminal Island, CA; Washington International Ins. Co.	Nov. 5, 1980	Nov. 17, 1980	Los Angeles, CA; $50,000
Trailer Marine Transport Corp., Box 3921, San Juan, PR; The American Ins. Co. D 11/26/80	Sept. 6, 1976	Nov. 8, 1976	San Juan, PR; $10,000
Transamerica Realco Inc., 145 N. Avenue East, Elizabeth, NJ; Transamerica Ins. Co.	Dec. 2, 1980	Dec. 10, 1980	New York Seaport; $10,000
United States Steel Int'l (NY), Inc., 100 Church St., New York, NY; St. Paul Fire & Marine Ins. Co. D 12/31/80	May 21, 1968	May 23, 1968	New York, NY; $10,000
Virgin Island Cement Co., Inc., G.P.O. Box 4487, San Juan, PR; Puerto-Rican-American Ins. Co.	Mar. 13, 1979	Mar. 28, 1979	San Juan, PR; $10,000

Name of principal and surety	Date of bond	Date of approval	Filed with district director/area director/amount
Virgin Island Cement Co., Chase Manhattan Bank Bldg., Hato Rey, PR; Peerless Ins. Co. D 3/12/79	Mar. 15, 1977	Mar. 15, 1977	San Juan, PR; $10,000

(BON-3-10)

MARILYN G. MORRISON,
Director, Carriers, Drawback and Bonds Division.

(T.D. 81-25)

Manmade Fiber Textile Products—Restriction on Entry

Restriction on entry of manmade fiber textile products manufactured or produced in Costa Rica

There is published below a directive of November 21, 1980, received by the Commissioner of Customs from the acting chairman, Committee for the Implementation of Textile Agreements, concerning restriction on entry of manmade fiber textile products in category 649 manufactured or produced in Costa Rica.

This directive was published in the Federal Register on November 28, 1980 (45 F.R. 79136), by the committee.

(QUO-2-1)

Dated: February 2, 1981.

WILLIAM D. SLYNE,
(For Richard R. Rosettie, Acting Director, Duty Assessment Division).

U.S. DEPARTMENT OF COMMERCE,
INTERNATIONAL TRADE ADMINISTRATION,
Washington, D.C., November 21, 1980.

Committee for the Implementation of Textile Agreements

COMMISSIONER OF CUSTOMS,
Department of the Treasury,
Washington, D.C.

DEAR MR. COMMISSIONER: Pursuant to the Bilateral Cotton, Wool and Man-Made Fiber Textile Agreement of September 22, 1980, between the Governments of the United States and Costa Rica,

and in accordance with the provisions of Executive Order 11651 of March 3, 1972, as amended by Executive Order 11951 of January 6, 1977, you are directed to prohibit, effective on January 1, 1981 and for the 12-month period extending through December 31, 1981, entry into the United States for consumption and withdrawal from warehouse for consumption of manmade fiber textile products in category 649, produced or manufactured in Costa Rica, in excess of 1,685,000 dozen.

In carrying out this directive entries of textile products in category 649 which have been exported to the United States prior to January 1, 1981, shall, to the extent of any unfilled balance, be charged against the level of restraint established for such goods during the 12-month period beginning on January 1, 1980 and extending through December 31, 1980. In the event that the level of restraint established for that period has been exhausted by previous entries, such goods shall be subject to the level set forth in this letter.

The level set forth above is subject to adjustment in the future according to the provisions of the bilateral agreement of September 22, 1980 between the Governments of the United States and Costa Rica which provide, in part, that: (1) The specific limit may be increased for carryover and carryforward up to 11 percent of the applicable category limit or sublimit; and (2) administrative arrangements or adjustments may be made to resolve minor problems arising in the implementation of the agreement. Any appropriate adjustments under the provisions of the bilateral agreement, referred to above, will be made to you by letter.

A detailed description of the textile categories in terms of TSUSA numbers was published in the Federal Register on February 28, 1980 (45 F.R. 13172), as amended on April 23, 1980 (45 F.R. 27463), and August 12, 1980 (45 F.R. 53506).

In carrying out the above directions, the Commissioner of Customs should construe entry into the United States for consumption to include entry for consumption into the Commonwealth of Puerto Rico.

The actions taken with respect to the Government of Costa Rica and with respect to imports of manmade fiber textile products from Costa Rica have been determined by the Committee for the Implementation of Textile Agreements to involve foreign affairs functions of the United States. Therefore, these directions to the Commissioner of Customs, which are necessary for the implementation of such actions, fall within the foreign affairs exception to the rulemaking provisions of 5 U.S.C. 553. This letter will be published in the Federal Register.

Sincerely,

ARTHUR GAREL,
Acting Chairperson, Committee for the Implementation of Textile Agreements.

(T.D. 81-26)

Bonds

Approval of consolidated aircraft bond (air carrier blanket bond), Customs form 7605; amendment of T.D. 76-288

T.D. 76-288 relating to the approval of the consolidated aircraft bond of the following principal is hereby amended as necessary to show that such principal is designated as a carrier of bonded merchandise, as noted below.

Dated: February 3, 1981.

Principal	*Effective date as carrier*
Societe Anonyme Belge D'Exploitations de la Navigation Aerienne, a/k/a Sabena Belgian World Airlines	January 7, 1931

MARILYN G. MORRISON,
Director,
Carriers, Drawback and Bonds Division.

(T.D. 81-27)

Foreign Currencies—Variances From Quarterly Rate

The following rates of exchange are based upon rates certified to the Secretary of the Treasury by the Federal Reserve Bank of New York, pursuant to section 522(c), Tariff Act of 1930, as amended (31 U.S.C. 372(c)), and reflect variances of 5 per centum or more from the quarterly rate published in T.D. 81-13 for the following countries. Therefore, as to entries covering merchandise exported on the dates listed, whenever it is necessary for Customs purposes to convert such currency into currency of the United States, conversion shall be at the following rates:

Austria schilling:	
January 29, 1981	$0.067545
January 30, 1981	.066622
Belgium franc:	
January 28, 1981	$0.029869
January 29, 1981	.029806
January 30, 1981	.029291
Denmark krone:	
January 27, 1981	$0.156617
January 28, 1981	.156006
January 29, 1981	.154919
January 30, 1981	.152555

France franc:	
January 29, 1981	$0.207189
January 30, 1981	.203770
Germany deutches mark:	
January 28, 1981	$0.479616
January 29, 1981	.477555
January 30, 1981	.469043
Ireland pound:	
January 29, 1981	$1.7840
January 30, 1981	1.7520
Italy lira:	
January 28, 1981	$0.001011
January 29, 1981	.001007
January 30, 1981	.000992
Netherlands guilder:	
January 28, 1981	$0.441696
January 29, 1981	.439850
January 30, 1981	.432900
Norway krone:	
January 30, 1981	$0.182399
Sri Lanka rupee:	
January 30, 1981	$0.055991
Switzerland franc:	
January 29, 1981	$0.525486
January 30, 1981	.517598

(LIQ-03-01 O:C:E)

Dated: January 30, 1981.

GWENN KLEIN KIRSCHNER,
Acting Chief,
Customs Information Exchange.

(T.D. 81-28)

Foreign Currencies—Daily Rates For Countries Not on Quarterly List

Rates of exchange based on rates certified to the Secretary of the Treasury by the Federal Reserve Bank of New York for the Brazil cruzeiro, People's Republic of China yuan, Hong Kong dollar, Iran rial, Philippines peso, Singapore dollar, Thailand baht (tical), and Venezuela bolivar

The Federal Reserve Bank of New York, pursuant to section 522(c), Tariff Act of 1930, as amended (31 U.S.C. 372(c)), has certified buying rates for the dates and foreign currencies shown below. The rates of exchange, based on these buying rates, are published for the

information and use of Customs officers and others concerned pursuant to part 159, subpart C, Customs Regulations (19 CFR 159, subpart C).

Brazil cruzeiro:	
January 26–30, 1981	$0. 0146
People's Republic of China yuan:	
January 26, 1981	$0. 639632
January 27, 1981	. 634558
January 28, 1981	. 630031
January 29–30, 1981	. 629485
Hong Kong dollar:	
January 26, 1981	$0. 191534
January 27, 1981	. 190876
January 28, 1981	. 190658
January 29, 1981	. 190512
January 30, 1981	. 189107
Iran rial:	
January 26–30, 1981	Not avilable
Philippines peso:	
January 26–30, 1981	$0. 1320
Singapore dollar:	
January 26, 1981	$0. 480077
January 27, 1981	. 481000
January 28, 1981	. 482509
January 29, 1981	. 482160
January 30, 1981	. 478927
Thailand baht (tical):	
January 26–30, 1981	$0. 0484
Venezuela bolivar:	
January 26–30, 1981	$0. 2329

(LIQ–03–01 O:C:E)

Dated: January 30, 1981.

GWENN KLEIN KIRSCHNER,
Acting Chief,
Customs Information Exchange.

(T.D. 81–29)

Foreign Currencies—Daily Rates For Countries Not on Quarterly List

Rates of exchange based on rates certified to the Secretary of the Treasury by the Federal Reserve Bank of New York for the Brazil cruzeiro, People's Republic of China yuan, Hong Kong dollar, Iran rial, Philippines peso, Singapore dollar, Thailand baht (tical), and Venezuela bolivar

The Federal Reserve Bank of New York, pursuant to section 522(c), Tariff Act of 1930, as amended (31 U.S.C. 372(c)), has certified buying

rates for the dates and foreign currencies shown below. The rates of exchange, based on these buying rates, are published for the information and use of Customs officers and others concerned pursuant to part 159, subpart C, Customs Regulations (19 CFR 159, subpart C).

Brazil cruzeiro:	
January 19–23, 1981	$0.0146
People's Republic of China yuan:	
January 19–21, 1981	$0.642797
January 22–23, 1981	.644745
Hong Kong dollar:	
January 19, 1981	$0.193013
January 20, 1981	.193087
January 21, 1981	.193555
January 22, 1981	.192678
January 23, 1981	.192419
Iran rial:	
January 19–23, 1981	Not available
Philippines peso:	
January 19–23, 1981	$0.1320
Singapore dollar:	
January 19, 1981	$0.481580
January 20, 1981	.482625
January 21, 1981	.483676
January 22, 1981	.481000
January 23, 1981	.480307
Thailand baht (tical):	
January 19–23, 1981	$0.0484
Venezuela bolivar:	
January 19–23, 1981	$0.2329

(LIQ–3–01 O:C:E)

Dated: January 23, 1981.

GWENN KLEIN KIRSCHNER,
Acting Chief,
Customs Information Exchange.

United States Court of International Trade

One Federal Plaza

New York, N.Y. 10007

Chief Judge

Edward D. Re

Judges

Paul P. Rao
Morgan Ford
Scovel Richardson
Frederick Landis
James L. Watson
Herbert N. Maletz
Bernard Newman
Nils A. Boe

Senior Judge

Samuel M. Rosenstein

Clerk

Joseph E. Lombardi

Decisions of the United States Court of International Trade

(Slip Op. 81–9)

ARMCO, INC. AND CF&I STEEL CORPORATION, PLAINTIFFS *v.* UNITED STATES, DEFENDANT

Order

Court No. 80–9–01435

(Dated January 23, 1981)

RICHARDSON, Judge: Upon reading and filing plaintiffs' motion for an order for production and protection of confidential documents in

336-950 O 81 - 2

the administrative record of U.S. International Trade Commission Investigation No. 731–TA–26 (Final), and defendant's cross-motion for an order of protection against disclosure of certain of said confidential documents, and upon the court's examination of said confidential documents in camera, it is

ORDERED that defendant's said cross-motion be, and the same hereby is, denied, and it is further

ORDERED that plaintiffs' said motion be, and the same hereby is, granted to the extent and upon the terms and conditions herein set forth:

1. Confidential document No. 3 insofar as it does not disclose information concerning Borneo Sumatra's sources of supply other than Korea on page 8 thereof under the heading "NAIL IMPORTS from 1977–1979," confidential documents numbered 2, 4 through 17 inclusive, 45, and 58 in list No. 2 transmitted to the court in connection with this action, shall be available to counsel for plaintiffs for examination and copying at the office of the clerk of this court during business hours of the 30-day period commencing on the date of entry of this order.

2. All of the information not previously made publicly available contained in the confidential documents in said list No. 2 shall be considered confidential.

3. Except as otherwise provided in this order, counsel for plaintiffs shall not disclose the confidential information to anyone other than their immediate office personnel actively assisting in this litigation.

4. Counsel for plaintiffs and their immediate office personnel shall neither disclose nor use any of the confidential information for purposes other than this litigation or (subject to continued safeguards to preserve confidentiality) any remand or appeal of this matter. Whenever used in this order, the term "this litigation" shall be deemed to include any remand or appeal resulting therefrom.

5. If, in the opinion of counsel for any party, it becomes necessary to consult with experts independent of the industry involved in evaluating the confidential information, such experts shall agree not to disclose any of the confidential information to anyone other than to the counsel who consulted with them or to that counsel's office personnel, and then for purposes of this litigation only; any expert so consulted shall first sign a statement submitting himself or herself to the jurisdiction of this court and such reasonable sanctions as the court may deem appropriate in the event of a breach of the conditions of this protective order by such expert.

6. In no event shall disclosure of confidential information be made to in-house counsel or other representatives, agents, or employees of plaintiffs.

7. Counsel for plaintiffs shall maintain a record of any and all copies of confidential information made, the persons to whom they are pro-

vided, and the dates on which they are returned. All such copies shall be clearly labeled to indicate that they contain confidential information, and that they are to be returned at the conclusion of this litigation.

8. Any documents, including briefs and memorandums, which contain any confidential information, as defined in paragraph 2, and are filed by any party with the court in this action, shall be conspicuously marked as containing information which is not to be disclosed to the public, and arrangements shall be made with the clerk of this court to retain such documents under seal, permitting access only to the court, court personnel authorized by the court to have access, and counsel for the parties.

9. Any briefs or memorandum containing confidential information shall be served upon the other parties in a wrapper conspicuously marked on the front "confidential—to be opened only by (the name(s) of the attorneys handling the case)" and shall be accompanied by a separate copy from which the confidential information has been deleted.

10. Upon conclusion of this litigation, counsel for plaintiffs shall (a) return all copies of the confidential documents obtained under this order and the record required to be maintained under paragraph 7 above, and (b) destroy all other documents (including documents held by persons authorized under this order to have access thereto) containing the confidential information.

11. Any reference to plaintiffs' counsel herein shall include any other interested party who may subsequently be granted access to such documents under protective order.

12. The issuance of this order shall not preclude plaintiffs from seeking discovery of additional documents at a later time under the terms and conditions set forth herein.

(Slip Op. 81–10)

ARMCO, INC. and CF&I CORPORATION, PLAINTIFFS *v.* UNITED STATES, DEFENDANT

Court No. 80–9–01435

Memorandum to Accompany Order

(Dated January 23, 1981)

RICHARDSON, Judge: In this action to review the International Trade Commission's (ITC) negative determination in an antidumping

investigation of steel wire nails from the Republic of Korea various parties move for leave to intervene in the action as a matter of right, and plaintiffs cross move to have the proposed answer annexed to the intervention motion stricken. The defendant took no part in the motions.

In the moving papers all but one of the applicants contend that they are entitled to intervene as of right as interested parties who were involved in the administrative proceedings. It is asserted that the applicant Korea Metal Industry Cooperative (KMIC) is an unincorporated association organized under the laws of the Republic of Korea, is an association of Korean companies that manufacture metal products, that its members include the producers and exporters of steel wire nails which were the subject of the challenged determination and also producers and exporters of steel wire nails which were not investigated, and that the KMIC participated in the administrative proceedings before Treasury, Commerce, and the ITC.

It is further asserted that applicants Ah Ju Steel Co. Ltd. (formerly Murakami Kogyo Co. (MASAN) Ltd.), Han Duk Steel Co., Ltd. (formerly Korea Murata Industrial Co. Ltd.), Je Il Steel Co. Ltd. (formerly Kankoku Nittei Co. Ltd.), Kankoku Nitto Co. Ltd., Korea Nippon Seisen Co. Ltd., and Kuk Dong Metal Ind. Co., are companies organized under the laws of the Republic of Korea, are producers and exporters of steel wire nails from the Republic of Korea the subject of the challenged determination, and were parties to the administrative proceedings before Treasury, Commerce, and the ITC. Additionally, they assert that they are interested parties within the meaning of 19 U.S.C.A. 1677(9)(A) (sec. 771(9)(A), Tariff Act of 1930 as amended) who have the right to appear and be heard in this action in accordance with 19 U.S.C.A. 1516a(d) (sec. 516A(d), Tariff Act of 1930 as amended). The KMIC does not make this assertion on its own behalf.

A copy of the proposed answer setting forth the defense of the applicants is annexed to the moving papers as required by rule 24(c) of the court's rules.

In the cross-moving papers plaintiffs, while not contesting the applicants' asserted right to appear and be heard in the action, are opposed to their appearance as parties plaintiff or defendant, and to their interposition of a formal pleading which takes the form of an answer that essentially repeats the averments of defendant's answer as to which issue has been joined. Plaintiffs assert that the court should require of the applicants only a concise statement of their interest, and the grounds upon which intervention is sought—calling attention to the fact that applicants' proposed answer was in effect generated

when defendant served a copy of its answer upon the applicant KMIC whom plaintiffs characterize as a nonparty.

On the basis of the papers before the court, it is clear to the court that the applicants' motion must be granted except as to the applicant KMIC, as to whom the motion must be denied, and further, that plaintiffs' cross-motion must be denied.

With the exception of the KMIC the applicants are parties in interest within the meaning of section 1677(9)(A) because they are foreign manufacturers, producers, or exporters. However, the KMIC is not a foreign manufacturer, producer, or exporter. It is a foreign business association. And no provision has been made in the statute for inclusion of foreign business associations within the definition of interested parties, as has been done in the statute with respect to business associations of domestic manufacturers, producers, or wholesalers, and even importers. *Cf. Asahi Chemical Industry Company, Ltd., et al.*, plaintiffs, v. *United States*, defendant, *American Yarn Spinners Association*, intervenors, court Nos. 80–5–00755–S and 80–5–00755 (Slip Op. 80–5 at p. 35).

The provision for or reference to other parties to the investigation appearing in 19 U.S.C.A., 1673b(f) (sec. 733(f), Tariff Act of 1930 as amended) is broad enough in scope to include a foreign business association (of manufacturers, producers, or exporters) for investigatory purposes before the ITC. However, judicial review may be sought only by an interested party who is a party to the proceeding in connection with which the matter arises (19 U.S.C.A. 1516a(a) (sec. 516A(a), Tariff Act of 1930 as amended)). Thus, while the KMIC may come within the ambit of the term other parties for purposes of ITC investigation (for obvious reasons no attempt has been made in the statute to limit the parties whom the ITC may consult or contact in the prosecution of an investigation), it is not within the scope of the term interested parties for judicial review purposes.

The court, therefore, agrees with plaintiffs' characterization of the KMIC as a nonparty. And it follows that although the party initiating this action was obliged to serve copies of its pleadings upon the Korean nail manufacturers, producers, or exporters in accordance with the requirement of section 1516a(d), the statutory mandate for pleading service did not extend to the KMIC—a nonparty in the judicial review sense.

With respect to the proposed pleading annexed to the moving papers, it is to be noted that although the applicants could have adopted the defendant's pleading as their own (See *Dalva* v. *Bailey*, 158 F. Supp. 204, 207, S.D.N.Y., 1957), the proposed answer does not repeat the allegations of the defendant's answer in toto, and as such, constitutes

a useful pleading to put in issue an allegation of the complaint not controverted by the defendant, i.e., paragraph 16[1] of the complaint.

ORDER

RICHARDSON, Judge: Upon reading and filing the motion of Korea Metal Industry Cooperative (KMIC), and Ah Ju Steel Co. Ltd. (formerly Murakami Kogyo Co. (MASAN) Ltd.), Han Duk Steel Co. Ltd. (formerly Korea Murata Industrial Co. Ltd.), Je Il Steel Co. Ltd. (formerly Kankoku Nittei Co. Ltd.), Kankoku Nitto Co. Ltd., Korea Nippon Seisen Co. Ltd., and Kuk Dong Metal Ind. Co. for leave to intervene in this action as parties defendant together with the proposed answer attached thereto, and plaintiffs' cross-motion to strike said proposed answer, and due deliberation having been had and the court having filed its memorandum of decision,

Now, therefore, it is

ORDERED that plaintiffs' said cross-motion to strike be, and the same hereby is, denied, and it is further

ORDERED that the motion of Korea Metal Industry Cooperative (KMIC) for leave to intervene herein be, and the same hereby is, denied and it is further

ORDERED that the motion of Ah Ju Steel Co. Ltd. (formerly Murakami Kogyo Co. (MASAN) Ltd.), Han Duk Steel Co. Ltd. (formerly Korea Murata Industrial Co. Ltd.), Je Il Steel Co. Ltd. (formerly Kankoku Nittei Co. Ltd.), Kankoku Nitto Co. Ltd., Korea Nippon Seisen Co. Ltd., and Kuk Dong Metal Ind. Co. for leave to intervene herein be, and the same hereby is, granted, and the proposed answer attached to said motion is hereby deemed to be the answer of said intervenor-defendants.

---

[1] Paragraph 16 of the complaint alleges: "The majority (of the ITC) concluded that there was 'no causal link' between the economic condition of the United States nail industry and imports of Korean nails which the Commerce Department determined are being sold in the United States at less than fair value."

Decisions of the United States Court of International Trade

Abstracts

Abstracted Protest Decisions

DEPARTMENT OF THE TREASURY, *January 26, 1981.*

The following abstracts of decisions of the United States Court of International Trade at New York are published for the information and guidance of officers of the customs and others concerned. Although the decisions are not of sufficient general interest to print in full, the summary herein given will be of assistance to customs officials in easily locating cases and tracing important facts.

WILLIAM T. ARCHEY,
Acting Commissioner of Customs.

DECISION NUMBER	JUDGE & DATE OF DECISION	PLAINTIFF	COURT NO.	ASSESSED	HELD	BASIS	ENTRY AND MERCHANDISE
				Par. or Item No. and Rate	Par. or Item No. and Rate		
P81/11	Ford, J. January 22, 1981	Camp Ways, inc.	78-5-00751	Item 380.84 25¢ per lb.+ 27.5%	Item 376.56 16.5%	H. Rosenthal Co. v. U.S. (C.D. 4769, aff'd C.A.D. 1236)	Los Angeles Ponchos of manmade fibers

DECISION NUMBER	JUDGE & DATE OF DECISION	PLAINTIFF	COURT NO.	ASSESSED	HELD	BASIS	PORT OF ENTRY AND MERCHANDISE
				Par. or Item No. and Rate	Par. or Item No. and Rate		
P81/12	Ford, J. January 22, 1981	Novo Laboratories, Inc.	79-11-01631	Item 437.40 5%	Item 437.46 Free of duty	Novo Enzyme Corporation v. U.S. (C.D. 4806)	New York Rennet
P81/13	Richardson, J. January 22, 1981	ITT Semiconductors Corp.	77-7-01139	Item 687.60 6% without allowance under item 807.00	Items 687.60/ 807.00 6% and subject to allowance for cost or value of silicon dice or chips	Texas Instruments Incorporated v. U.S. (Abs. P75/653, aff'd C.A.D. 1178) ITT Semiconductors v. U.S. (Abs. P78/11)	Miami American goods returned; integrated circuits and transistors containing U.S. fabricated components (certain chips or dice)
P81/14	Richardson, J. January 22, 1981	ITT Semiconductors Corp.	77-12-04859	Item 687.60 6% without allowance under item 807.00	Items 687.60/ 807.00 6% and subject to allowance for cost or value of silicon dice or chips	Texas Instruments Incorporated v. U.S. (Abs. P75/653, aff'd C.A.D. 1178) ITT Semiconductors v. U.S. (Abs. P78/11)	Miami American goods returned; integrated circuits and transistors containing U.S. fabricated components (silicon chips or dice)
P81/15	Landis, J. January 22, 1981	Bruce Duncan Co., Inc., a/c Star Lite Industries	78-7-01366	Item 653.30 19%	Item 683.65 4%	Warshawsky & Company v. U.S. (C.D. 4410)	Los Angeles Amber and clear auto lamps
P81/16	Watson, J. January 22, 1981	Pompeian Studios	80-6-00902	Item 514.81 10.5%	Item 765.30 Free of duty	Judgment on the pleadings	New York "Gruppa La Pieta Marmo Bianco Carrara"; workl of art

Decisions of the United States Court of International Trade

Abstracts

Abstracted Reappraisement Decisions

DECISION NUMBER	JUDGE & DATE OF DECISION	PLAINTIFF	COURT NO.	BASIS OF VALUATION	HELD VALUE	BASIS	PORT OF ENTRY AND MERCHA
R81/34	Watson, J. January 21, 1981	Antonia Realty & Warehousing Corp.	76-8-01841	Foreign value	Claimed unit values (all in Deutsche mark) listed on schedule attached to decision and judgment	Agreed statement of facts	San Francisco Various automotive tires
R81/35	Watson, J. January 21, 1981	Conti Rubber Products, Inc.	75-7-01784	Foreign value	Claimed unit values (all in Deutsche mark) listed on schedule attached to decision and judgment	Agreed statement of facts	San Fransco Various automotive tires
R81/36	Watson, J. January 21, 1981	Conti Rubber Products, Inc.	76-5-01252, etc.	Foreign value	Claimed unit values (all in Deutsche mark) listed on schedule attached to decision and judgment	Agreed statement of fact	Houston utomotive Various a tires

DECISION NUMBER	JUDGE & DATE OF DECISION	PLAINTIFF	COURT NO.	BASIS OF VALUATION	UNIT OF VALUE	BASIS	PORT OF ENTRY AND MERCHANDISE
R81/37	Watson, J. January 21, 1981	Conti Rubber Products, Inc.	76-12-02737	Foreign value	Claimed unit values (all in Deutsche mark) listed on schedule attached to decision and judgment	Agreed statement of facts	Houston Various automotive tires
R81/38	Watson, J. January 21, 1981	Conti Rubber Products, Inc.	77-5-00708	Foreign value	Claimed unit values (all in Deutsche mark) listed on schedule attached to decision and judgment	Agreed statement of facts	Baltimore Various automotive tires
R81/39	Boe, J. January 21, 1981	Conti Rubber Products, Inc.	74-10-02871, etc.	Foreign value	Claimed unit values (all in Deutsche mark) listed on schedule attached to decision and judgment	Agreed statement of facts	New York Various automotive tires
R81/40	Boe, J. January 21, 1981	Conti Rubber Products, Inc.	75-1-00308, etc.	Foreign value	Claimed unit values (all in Deutsche mark) listed on schedule attached to decision and judgment	Agreed statement of facts	Houston Various automotive tires

International Trade Commission Notices

Investigations by the U.S. International Trade Commission

DEPARTMENT OF THE TREASURY

The appended notices relating to investigations by the U.S. International Trade Commission are published for the information of Customs Officers and others concerned.

WILLIAM T. ARCHEY,
Acting Commissioner of Customs.

In the Matter of CERTAIN AIRTIGHT CAST-IRON STOVES	Investigation No. 337–TA–69

Notice of Issuance of Exclusion Order and Cease and Desist Orders

AGENCY: U.S. International Trade Commission.

ACTION: Issuance of exclusion order and cease and desist orders.

SUMMARY: On January 12, 1981, the Commission issued its action and order, and opinion in the above-captioned investigation. The Commission ordered that airtight cast-iron wood-burning stoves which are visually similar to stoves made by Jotul of Norway be excluded from entry into the United States and that respondents Wood Heat, Heritage Stove Co., Hutch Manufacturing Co., Fireplace Distributors, Meteor Design International, and Great Eastern Trading Co. cease and desist from violating section 337 in ways specified in the orders.

SUPPLEMENTARY INFORMATION: This investigation, under section 337 of the Tariff Act of 1930, was instituted by notice published in the Federal Register on July 12, 1979 (44 F.R. 40732) following receipt of a complaint by Jotul of Norway and Kristia Associates of Portland, Maine. In that notice, the Commission ordered that an investigation be instituted under section 337 to determine whether unfair methods of competition and unfair acts exist in the importation or sale in the United States of certain airtight cast-iron wood- and coal-burning stoves. The notice stated that the investigation was

being undertaken to determine whether respondents' stoves were infringing Jotul's common law trademarks, being passed off as Jotul's products, infringing Jotul's registered U.S. trademarks, or being deceptively advertised and marketed. The complaint alleged that the effect of these acts was to injure an industry, Kristia Associates (now Jotul USA, Inc.) and the Jotul stove dealers, efficiently and economically operated in the United States, or to restrain trade and commerce in the United States.

Fourteen foreign and 11 domestic firms were named respondents in the original notice of investigation. On October 5, 1979, 26 additional firms were added as respondents. On October 16, 1979, one additional foreign firm was added as a respondent. During the course of the investigation, four firms were terminated as respondents upon proof that they had ceased all involvement in the stove business. The investigation has been terminated as to 25 other respondents that have executed consent order agreements or settlement agreements. The remaining respondents failed to appear and were found by the administrative law judge to be in default. The Commission's action and order, and opinion issued on January 12, 1981, is concerned those defaulting respondents.

The Commission's action and order, and the Commission opinion in support thereof is available in the office of the Secretary, U.S. International Trade Commission, 701 E Street NW., Washington, D.C. 20436; telephone 202–523–0161.

FOR FURTHER INFORMATION CONTACT: Jeffrey Neeley, Esq., Office of the General Counsel, U.S. International Trade Commission, 701 E Street NW., Washington, D.C. 20436; telephone 202–523–0359.

By order of the Commission.

Issued: January 13, 1981.

KENNETH R. MASON,
Secretary.

In the Matter of CHLOROFLUOROHYDROCARBON DRY-CLEANING PROCESS, MACHINES AND COMPONENTS THEREFOR	Investigation No. 337–TA–84

Notice of Change of Designation of a Respondent

AGENCY: U.S. International Trade Commission.

ACTION: Notice is hereby given that the U.S. International Trade Commission has granted a motion to change the designation of respondent Böhler & Weber KG to Böwe Maschinenfabrik GmbH.

AUTHORITY: The authority for this action is contained in section 337 of the Tariff Act of 1930 (19 U.S.C. 1337) and in section 210.22 of the Commission's Rules of Practice and Procedure (19 CFR 210.22).

SUPPLEMENTARY INFORMATION: On December 16, 1980, counsel for the respondent heretofore known as Böhler & Weber KG advised the Commission that it has changed its trading style to Böwe Maschinenfabrik GmbH. It also moved the Commission for an amendment to the notice of investigation to reflect this change. On January 16, 1981, the Commission granted the motion.

Copies of the Commission's action and order and all other nonconfidential documents filed in connection with this investigation are available for inspection during official business hours (8:45 a.m. to 5:15 p.m.) in the Office of the Secretary, U.S. International Trade Commission, 701 E Street NW., Washington, D.C. 20436; telephone 202–523–0161.

FOR FURTHER INFORMATION CONTACT: Jack Simmons, Esq., Office of the General Counsel, U.S. International Trade Commission; telephone 202–523–0493.

By order of the Commission.

Issued: January 22, 1981.

KENNETH R. MASON,
Secretary.

In the Matter of CERTAIN ADJUSTABLE WINDOW SHADES AND COMPONENTS THEREOF	Investigation No. 337–TA–83

Notice of Proposed Consent Orders and Settlement Agreements and Request for Public Comments Thereon

AGENCY: U S. International Trade Commission

ACTION: Notice is hereby given that the presiding officer in the above-captioned investigation has certified to the Commission for action a joint motion to terminate the investigation, along with proposed settlement agreements and consent orders executed by the complainant and two respondents. Before taking final action on the proposed consent orders and settlement agreements, the Commission requests that interested members of the public submit written comments thereon

SUPPLEMENTARY INFORMATION:

BACKGROUND

Newell Window Furnishings Co. (hereinafter "complainant"), Freeport, Ill., filed a complaint with the U.S. International Trade Commission (hereinafter "Commission") on April 7, 1980. The complaint alleged that unfair methods of competition and unfair acts have occurred, including the infringing of U.S. Letters Patent 4,006,770 (hereinafter "the patent"), which have the effect or tendency to destroy or substantially injure an industry, efficiently and economically operated, in the United States. The Commission instituted an investigation into those allegations and published notice thereof in the Federal Register of May 29, 1980 (45 F.R. 36229). The notice of investigation listed as parties respondent two overseas firms. Tony Plastic Co., Kaohsiung, Taiwan, Republic of China, and Dirkson Inc., Taipei, Taiwan, Republic of China (producers and exporters of the allegedly infringing articles) and three domestic firms, Breneman, Inc., Cincinnati, Ohio, Joanna Western Mills Co., Chicago, Ill., and Stanley Drapery Hardware, Wallingford, Conn. (importers and distributors of the allegedly infringing articles).

On September 30, 1980, the complainant and respondents Joanna Western Mills Co. and Breneman, Inc., filed a joint motion (motion 83–13) to terminate this investigation as to respondents Joanna and Breneman pursuant to section 210.51 of the Commission's Rules of Practice and Procedure, on the basis of the proposed settlement agreements and consent orders. A supplement to the joint motion to terminate was filed by the same three parties on December 3, 1980. The motion is unopposed.

SETTLEMENT AGREEMENTS

There are two proposed settlement agreements in this case—one of them between the complainant and the respondent Breneman and the other between the complainant and the respondent Joanna. The substantive provisions of the proposed settlement agreements are identical and may be summarized as follows:

1. Each respondent represents and warrants that it has ceased importing the allegedly infringing window shades and that it has placed no subsequent purchase orders for the importation of such window shades.

2. The agreement constitutes no admission or inference that the subject patent is valid or infringed or that the respondent has committed any wrongful act or violated any law.

3. Each respondent may dispose of current inventories of the allegedly infringing window shades upon payment of a fee (the amount

of which is confidential) to the complainant. The right to dispose of such window shades shall survive the termination of this investigation.

4. With respect to each of the respondent's allegedly infringing window shades, the complainant releases each respondent, its officers, successors, and assigns from any and all causes of action and claims for damage which complainant may have against them relating to unfair methods of competition arising out of the importation, use, and sale of the subject window shades. Complainant agrees to take no action against respondents, their directors, successors, and assigns, by reason of any prior use or sale of the subject window shades.

5. Each respondent shall give to the complainant reasonable notice, not less than 4 months, of its intent to import size-to-width window shades and components thereof which are nonstaple articles of commerce, which information will be held in confidence by complainant.

6. Nothing in the settlement agreements or the consent orders shall in any way impair respondents' right to challenge the validity and enforceability of the patent in any future proceeding.

7. The agreement shall be binding upon and inure to the benefit of complainant and respondent, their officers, successors, assigns, and other agents.

8. The agreement is considered a contract made by and under the laws of the State of Illinois.

The full text of each settlement agreement, except for confidential business information, is available for public inspection in the Office of the Secretary, U.S. International Trade Commission. Copies may be requested at the same address.

CONSENT ORDERS

There are two proposed consent orders—one between the complainant and Joanna, and the other between the complainant and Breneman. The substantive provisions of the two consent orders are identical and may be summarized as follows:

1. The parties concede that the Commission has subject matter and personal jurisdiction, and the parties waive all rights to seek judicial review or to otherwise challenge or contest the validity of the order.

2. Each order shall apply to the respondents and its officers, directors, employees, controlled and/or majority owned business entities, successors and assigns and to all persons who receive actual notice of this order.

3. The respondent will not import, cause to be imported, or purchase, sell, give, own, or consign subject the imported window shade products which have been offered for sale or sold in the United States. The respondent will likewise not import, purchase, sell, give, own or consign any device which infringes the patent or any component there-

of which constitutes a material part of the invention and is not a staple article or commodity of commerce. Respondent may dispose of all devices presently in inventory.

4. Each respondent is ordered to serve within 30 days a conformed copy of this order upon each of its respective officers, directors, managing agents, agents, and employees who have any responsibility for marketing, distribution of respondent's products in the United States, or for shipment or export the United States for resale.

5. The Commission may seek enforcement of this order pursuant to 19 U.S.C. 1337(f).

6. This order constitutes a settlement and resolution of investigation No. 337–TA–83. In the event that the patent is declared invalid by a court of competent jurisdiction from which no appeal can be taken, the provisions set forth in No. 3 above shall be void.

The full text of each consent order is available for public inspection in the Office of the Secretary, U.S. International Trade Commission. Copies may be requested at the same address.

The respondents named in the notice of investigation, published on May 29, 1980 (45 F.R. 36229), are: Joanna Western Mills Co.; Breneman, Inc.; Stanley Drapery Hardware; Tony Plastic Co.; and Dirkson, Inc.

SUBMISSION OF COMMENTS

All comments should be addressed to the Secretary, U.S. International Trade Commission, 701 E Street NW., Washington, D.C. 20436, and must reference investigation No. 337–TA–83. Comments must be received not later than 30 days after the date of publication of this notice in the Federal Register. The Commission will consider requests for oral argument or oral presentation on this matter if such requests are received in the Office of the Secretary not later than 15 days after the date of publication of this notice in the Federal Register.

FOR FURTHER INFORMATION CONTACT: Jack Simmons, Esq., Office of the General Counsel, U.S. International Trade Commission; telephone 202–523–0493.

By order of the Commission.

Issued: January 22, 1981.

KENNETH R. MASON,
Secretary.

Investigation No. 731–TA–28 (Final)

MENTHOL FROM THE PEOPLE'S REPUBLIC OF CHINA

Institution of Final Antidumping Investigation and Scheduling of Hearing

AGENCY: U.S. International Trade Commission.

ACTION: Institution of a final antidumping duty investigation.

SUMMARY: On January 7, 1981, the U.S. Department of Commerce issued an affirmative preliminary determination that there is a reasonable basis to believe or suspect that menthol from the People's Republic of China is being, or is likely to be, sold in the United States at less than fair value within the meaning of section 733 of the Tariff Act of 1930 (19 U.S.C. 1673b). Accordingly, the U.S. International Trade Commission (hereinafter "the Commission") hereby gives notice of the institution of investigation No. 731–TA–28 (Final) to determine whether an industry in the United States is materially injured, or is threatened with material injury, or the establishment of an industry in the United States is materially retarded, by reason of imports of such merchandise. For purposes of this investigation, the term "menthol" means menthol, whether natural or synthetic, provided for in items 413.28 and 437.64 of the Tariff Schedules of the United States (TSUS). This investigation will be conducted according to the provisions of part 207 of the Commission's Rules of Practice and Procedure (19 CFR 207, 44 F.R. 76457), subpart C, effective January 1, 1980.

EFFECTIVE DATE: January 23, 1981.

FOR FURTHER INFORMATION CONTACT: Ms. Miriam A. Bishop, Staff Investigator, Office of Investigations, U.S. International Trade Commission, Room 350, 701 E Street NW., Washington, D.C. 20436; telephone 202–523–0291.

SUPPLEMENTARY INFORMATION: On July 22, 1980, the Commission determined (Commissioner Stern dissenting), on the basis of the information developed during the course of investigation No. 731–TA–28 (Preliminary), that there is a reasonable indication that an industry in the United States is threatened with material injury by reason of imports of menthol from the People's Republic of China, provided for in TSUS items 413.28 and 437.64, which are allegedly sold or likely to be sold at less than fair value. As a result of the Commission's determination, the Department of Commerce continued its investigation into the question of less-than-fair-value sales. The final determination by the Department of Commerce of whether menthol from the People's Republic of China is being, or is likely to be, sold in the United States at less than fair value will be made within 75 days after the date of its preliminary determination, or, in this case, by March 23, 1981.

WRITTEN SUBMISSIONS: Any person may submit to the Commission a written statement of information pertinent to the subject of this investigation. A signed original and 19 true copies of each sub-

mission must be filed at the Office of the Secretary, U.S. International Trade Commission Building, 701 E Street NW., Washington, D.C. 20436, on or before April 20, 1981. All written submissions, except for confidential business data, will be available for public inspection.

Any submission of business information for which confidential treatment is desired shall be submitted separately from other documents. The envelope and all pages of such submissions must be clearly labeled Confidential Business Information. Confidential submissions and requests for confidential treatment must conform with the requirements of section 201.6 of the Commission's Rules of Practice and Procedure (19 CFR 201.6).

A staff report containing preliminary findings of fact will be available to all interested parties on March 24, 1981.

PUBLIC HEARING: The Commission will hold a public hearing in connection with this investigation on April 13, 1981, in the hearing room of the U.S. International Trade Commission Building, 701 E Street NW., Washington, D.C. 20436, beginning at 10 a.m., e.s.t. Requests to appear at the hearing should be filed in writing with the Secretary to the Commission not later than the close of business (5:15 p.m., e.s.t.), April 8, 1981. All persons desiring to appear at the hearing and make oral presentations must file prehearing statements and should attend a prehearing conference to be held at 10 a.m., e.s.t., on April 10, 1981, in room 117 at the U.S. International Trade Commission Building. Prehearing statements must be filed on or before April 8, 1981. For further information concerning the conduct of the investigation, hearing procedures, and rules of general application, consult the Commission's Rules of Practice and Procedure, part 207, subpart C (19 CFR 207), and part 201, subparts A through E (19 CFR 201).

The Commission has waived Commission rule 201.12(d) as amended, "Submission of prepared statements" in connection with this investigation. This rule stated that "Copies of witnesses' prepared statements should be filed with the Office of the Secretary of the Commission not later than 3 business days prior to the hearing and submission of such statements shall comply with sections 201.6 and 201.8 of this subpart." It is nevertheless the Commission's request that parties submit copies of witnesses' prepared testimony as early as practicable before the hearing in order to permit Commission review.

This notice is published pursuant to section 207.20 of the Commission's Rules of Practice and Procedure (19 CFR 207.20, 44 F.R. 76458).

By order of the Commission.

Issued: January 23, 1981.

KENNETH R. MASON,
Secretary.

In the Matter of CERTAIN STEEL ROD TREATING APPARATUS AND COMPONENTS THEREOF	Investigation No. 337–TA–97

Notice of Investigation

AGENCY: U.S. International Trade Commission.

ACTION: Institution of investigation pursuant to 19 U.S.C. 1337.

SUMMARY: Notice is hereby given that a complaint was filed with the U.S. International Trade Commission on December 17, 1980, under section 337 of the Tariff Act of 1930 (19 U.S.C. 1337), on behalf of Morgan Construction Co., 15 Belmont St., Worcester, Mass. 01605. The complaint alleges unfair methods of competition and unfair acts in the importation of certain steel rod treating apparatus and components thereof into the United States, or in their sale, by reason or such steel rod treating apparatus infringing claims 1–7 of U.S. Letters Patent 3,390,871. The complaint further alleges that the effect of tendency of the unfair methods of competition and unfair acts is to destroy or substantially injure an industry, efficiently and economically operated, in the United States.

The complainant requests that, during the investigation, a temporary exclusion of the imports in question be ordered and that, after a full investigation, a permanent exclusion order and a cease and desist order be issued by the Commission.

AUTHORITY: The authority for institution of this investigation is contained in section 337 of the Tariff Act of 1930 (19 U.S.C. 1337) and in section 210.12 of the Commission's Rules of Practice and Procedure.

SCOPE OF THE INVESTIGATION: Having considered the complaint, the U.S. International Trade Commission, on January 14, 1981, ordered that—

(1) Pursuant to subsection (b) of section 337 of the Tariff Act of 1930 (19 U.S.C. 1337(b)), an investigation be instituted to determine whether there is reason to believe there is a violation and whether there is a violation of subsection (a) of section 337 in the unlawful importation of certain steel rod treating apparatus and components thereof into the United States, or in their sale, by reason of such steel rod treating apparatus infringing claims 1–7 of U.S. Letters Patent 3,390,871, the effect or tendency of which is to destroy or substantially injure an industry, efficiently and economically operated, in the United States;

(2) For the purpose of this investigation so instituted, the

following are hereby named as parties upon which this notice of investigation shall be served:

(a) The complainant is—

Morgan Construction Co.
15 Belmont St.
Worcester, Mass. 01605

(b) The respondents are the following companies allegedly engaged in the unlawful importation of such articles into the United States, or in their sale, and are parties upon which the complaint is to be served:

Korf Industries & Handel GmbH & Co. K.G.
Moltkestrasse 15, D 7570
Baden-Baden, West Germany

Korf Engineering GmbH
Dusseldorf, West Germany

Korf Industries, Inc.
One NCNB Plaza
Charlotte, N.C. 28280

Georgetown Steel Corp.
South Fraser St.
Georgetown, S.C. 29440

Ashlow Steel & Engineering Co. Ltd.
Sheffield Road
Rotherham, England

Ashlow Corp.
4201 Pottsville Pike
Reading, Pa. 19605

(c) For the purpose of the investigation so instituted, Talbot S. Lindstrom, Chief, Unfair Import Investigations Division, U.S. International Trade Commission, 701 E Street NW., Washington, D.C. 20436, shall name the Commission investigative attorney, a party to this investigation; and

(3) For the investigation so instituted, Donald K. Duvall, Chief Administrative Law Judge, U.S. International Trade Commission, 701 E Street NW., Washington, D.C., 20436, shall designate the presiding officer.

SUPPLEMENTARY INFORMATION: Responses must be submitted by the named respondents in accordance with section 210.21 of the Commission's Rules of Practice and Procedure (19 CFR 210.21). Pursuant to sections 201.16(d) and 210.21(b) of the rules, such responses will be considered by the Commission if received not later than 20 days after the date of service of the complaint. Extensions of time for submitting a response will not be granted unless good and sufficient cause therefor is shown.

Failure of a respondent to file a timely response to each allegation in the complaint and in this notice may be deemed to constitute a

waiver of the right to appear and contest the allegations of the complaint and this notice, and to authorize the presiding officer and the Commission, without further notice to the respondent, to find the facts to be as alleged in the complaint and this notice and to enter both a recommended determination and a final determination containing such findings.

The complaint, except for any confidential information contained therein, is available for inspection during official working hours (8:45 a.m. to 5:15 p.m.) in the Office of the Secretary, U.S. International Trade Commission, 701 E Street NW., Washington, D.C. 20436; telephone 202-523-0161.

FOR FURTHER INFORMATION CONTACT: Wilhelm A. Zeitler, Unfair Import Investigations Division, U.S. International Trade Commission; telephone 202-523-0390.

By order of the Commission.

Issued: January 23, 1981.

KENNETH R. MASON,
Secretary.

Index

U.S. Customs Service

Treasury Decisions:	T.D. No.
Carriers' bonds	81-23
Consolidated aircraft bond	81-26
Instruments of international traffic bonds	81-24
Manmade fiber textile products—Restriction on entry; Costa Rica	81-25
Foreign currencies:	
Variences from quarterly rates—January 26–30, 1981	81-27
Daily rates for countries not on quarterly list—January 26–30, 1981	81-28
Daily rates for countries not on quarterly list—January 19–23, 1981	81-29

DEPARTMENT OF THE TREASURY
U.S. CUSTOMS SERVICE
WASHINGTON, D.C. 20229

OFFICIAL BUSINESS
PENALTY FOR PRIVATE USE, $300

POSTAGE AND FEES PAID
DEPARTMENT OF THE TREASURY (CUSTOMS)
(TREAS. 552)

U.S.MAIL

U.S. GOVERNMENT PRINTING OFFICE: 1981

15/8

Customs Bulletin

Regulations, Rulings, Decisions, and Notices concerning Customs and related matters

and Decisions

of the United States Court of Customs and Patent Appeals and the United States Court of International Trade

Vol. 15 FEBRUARY 25, 1981 No. 8

NEWARK PUBL'C LIBRARY

MAR 9 1981

U. S. GOVT. PUBS.
DEPOSITORY 376

This issue contains

T.D. 81-30 through 81-32
C.A.D. 81-5
Slip Op. 81-11 through 81-12
Protest abstracts P81/17 through P81/19
Reap. abstracts R81/41 through R81/49
International Trade Commission Notices

THE DEPARTMENT OF THE TREASURY
U.S. Customs Service

T1.11/3:

NOTICE

The abstracts, rulings, and notices which are issued weekly by the U.S. Customs Service are subject to correction for typographical or other printing errors. Users may notify the U.S. Customs Service, Logistics Management Division, Washington, D.C. 20229, of any such errors in order that corrections may be made before the bound volumes are published.

For sale by the Superintendent of Documents, U.S. Government Printing Office, Washington, D.C. 20402. Price: $2.25 (single copy domestic); $2.85 (single copy foreign). Subscription price: $85.00 a year domestic; $106.25 a year foreign.

U.S. Customs Service

Treasury Decisions

(T.D. 81-30)

Bonds

Approval of a carrier's bond, Customs form 3587

A bond of a carrier for the transportation of bonded merchandise has been approved as shown below. The approval of the bond is temporary until September 9, 1981.

Dated: February 5, 1981.

Name of principal and surety	Date of bond	Date of approval	Filed with district director/area director/amount
Don's Trucking, Inc., 1801 Coxendale Rd., Chester, Va.; motor carrier; Aetna Ins. Co.	Oct. 3, 1980	Dec. 16, 1980	Norfolk, Va. $25,000

(BON-3-03)

MARILYN G. MORRISON,
Director,
Carriers, Drawback and Bonds Division.

(T.D. 81-31)

Bonds

Approval and discontinuance of consolidated aircraft bonds (air carrier blanket bonds), Customs form 7605

The following consolidated aircraft bonds have been approved or discontinued as shown below. The symbol "D" indicates that the bond previously outstanding has been discontinued on the month, day, and year represented by the figures which follow. "PB" refers to a previous bond, dated as represented by the figures in parentheses immediately following, which has been discontinued. If the previous bond was in the

name of a different company or if the surety was different, the information is shown in a footnote at the end of the list.

Dated: February 9, 1981.

Name of principal and surety	Date term commences	Date of approval	Filed with district director/area director/amount
National Airlines, Inc., P.O. Box 59-2055, Miami, Fla.; Continental Casualty Co. D 12/12/80	Dec. 16, 1969	Dec. 23, 1969	Miami, Fla. $100,000

(BON-3-01)

MARILYN G. MORRISON,
Director,
Carriers, Drawback and Bonds Division.

(T. D. 81-32)

FIS-9-05-AAO

Reimbursable Services—Excess Cost of Preclearance Operations

DEPARTMENT OF THE TREASURY,
OFFICE OF THE COMMISSIONER OF CUSTOMS,
Washington, D.C., February 9, 1981.

Notice is hereby given that pursuant to section 24.18(d), Customs Regulations (19 CFR 24.18(d)), the biweekly reimbursable excess costs for each preclearance installation are determined to be as set forth below and will be effective with the pay period beginning February 22, 1981.

Installation	*Biweekly excess cost*
Montreal, Canada	$16,769
Toronto, Canada	28,436
Kindley Field, Bermuda	7,378
Nassau, Bahama Islands	12,254
Vancouver, Canada	11,901
Winnipeg, Canada	1,818
Freeport, Bahama Islands	11,151
Calgary, Canada	7,963
Edmonton, Canada	6,461

JACK L. LACY,
Comptroller.

[Published in the Federal Register, Feb. 13, 1981 (46 F.R. 12387]

Decisions of the United States Court of Customs and Patent Appeals

(ITC Investigation No. 337-TA-54)

CANADIAN TARPOLY CO. *v.* U.S. INTERNATIONAL TRADE COMMISSION, No. 81-5

HEADNOTES

1. Sec. 337 Tariff Act of 1930, as amended—All Writs Act—Mandamus

Mandamus is an extraordinary remedy, available only in extraordinary circumstances and when no meaningful alternatives are available. This court's power to issue a mandamus under the All Writs Act is limited to situations in which such action is necessary or appropriate in aid of its jurisdiction.

2. Id.

It is is established that the extraordinary writs cannot be used as substitutes for appeals, even though hardship may result from delay and perhaps unnecessary trial; and whatever may be done without the writ may not be done with it.

3. Scope of Statutory Authority of Administrative Agency

Administrative agencies have considerable latitude to shape their remedies within the scope of their statutory authority, having wide discretion in dealing with the problems entrusted to them, and in determining the choice of remedy deemed adequate to cope with unlawful practices. The relation of remedy to policy is peculiarly for the administrat ve agency and its special competence.

U.S. Court of Customs and Patent Appeals, February 5, 1981

Appeal No. 81-5

The attorneys in the above case are:

For Canadian Tarpoly Co.: *Fred S. Whisenhunt;* For International Trade Commission: *Christine Bliss.*

Before MARKEY, *Chief Judge,* RICH, BALDWIN, MILLER, and NIES, *Associate Judges.*

MARKEY, Chief Judge.

Petitioner seeks a writ of mandamus against the International Trade Commission (ITC). We deny the petition.

BACKGROUND

The matter results from an ITC Investigation No. 337–TA–54, "In the Matter of Certain Multicellular Plastic Film," conducted under sections 337 and 337a of the Tariff Act of 1930, as amended (19 U.S.C. 1337 and 1337a). Sealed Air Corp. there alleged unfair methods of competition and unfair acts in the unlicensed importation into the United States of certain multicellular plastic film allegedly manufactured in a foreign country by the process covered in claims 1 and 2 of its U.S. Patent No. 3,416,984 (the 984 patent). Petitioner was not a respondent in that investigation.

Having completed its investigation on June 12, 1979, the ITC determined that: Claims 1 and 2 of the 984 patent were not proven invalid; and (2) the unauthorized importation and sale of film made by an infringing process has the effect or tendency to destroy or substantially injure an industry, efficiently and economically operated in the United States.

Accordingly, on June 29, 1979, the ITC ordered that:

> 1. Multicellular plastic film manufactured abroad in accordance with the process disclosed by claims 1 and 2 of U.S. Letters Patent 3,416,984 is excluded from entry into the United States for the remaining term of said patent * * *
>
> * * * * * * *
>
> 3. That persons desiring to import multicellular plastic film into the United States may petition the [ITC] to institute such further proceedings as may be appropriate in order to determine whether the multicellular plastic film sought to be imported should be allowed entry into the United States;
>
> 4. That this order be published in the Federal Register and served upon each party of record in this investigation and upon * * * the Secretary of the Treasury.

As of June 29, 1979, the Secretary of the Treasury, acting through the Customs Service, has refused entry of multicellular plastic film into the United States pursuant to the ITC's exclusionary order. 19 U.S.C. 1337(d).

Petitioner, a Canadian corporation, manufactures summer swimming pool covers by cutting and sewing multicellular plastic film. Petitioner asserts that the film it uses is manufactured in Canada by a process not covered by claims 1 and 2 of the 984 patent. When the ITC exclusionary order took effect, petitioner says U.S. dealers and distributors ceased to order its pool covers, causing irreparable harm.

Petitioner asserts that it became aware of the ITC order in the early part of September 1980, and that it contacted the ITC in the

middle of that month to discuss an expedited proceeding under paragraph 3 of the order. The ITC proffered an expedited proceeding, to begin in the first week of October. However, believing that it would suffer irreparable harm during the ITC-estimated 4½ months required for the proceeding, petitioner declined to participate in the proffered proceeding.

Instead, on November 7, 1980, petitioner filed a petition with the ITC, challenging the legality of the exclusionary order. On December 10, 1980, the ITC denied that petition, saying that the order was within the scope of its statutory authority and that the expedited proceeding provided for in paragraph 3 was the most appropriate way to decide whether the plastic film which petitioner wished to export to the United States was noninfringing. The ITC informed petitioner that "to obtain expedited relief it may file a petition with the [ITC] requesting the institution of a proceeding pursuant to paragraph 3 of the [order]."

Between December 10–17, 1980, petitioner again contacted the ITC, asking whether its pool covers could enter the United States if petitioner manufactured film in the United States, shipped it to Canada for assembly of pool covers, then exported those pool covers into the United States. The ITC suggested that petitioner request an advisory opinion on that question.

Declining an expedited proceeding under paragraph 3 of the order, petitioner filed this petition for writ of mandamus on December 17, 1980.

Petitioner asserts that the ITC order in investigation No. 337-TA-54 exceeds the statutory authority of the ITC, illegally extends the monopoly of the 984 patent, is unconstitutional because it results in a taking of petitioner's property without due process of law, and is arbitrary and capricious and is a clear abuse of discretion.

Petitioner asks that we issue a writ of mandamus to the ITC, directing that the said order be vacated forthwith, at least as it applies to the petitioner, and that the [ITC] forthwith order the appropriate Customs officials to immediately suspend its directives which exclude from entry into the United States the multicellular plastic film of the petitioner.[1]

---

[1] Alternatively, petitioner requests:

(2) [T]hat an order be issued, directed to the [ITC], requiring [it]:

(a) to show cause in this court, at a time to be designated, why [it] should not vacate the order forthwith, at least as it applies to the petitioner, and to show cause why [it] should not order the appropriate Customs officials to suspend its directives which exclude from entry into the United States the multicellular plastic film of the petitioner; and

(b) to immediately suspend the order, and notify the appropriate Customs officials of such suspension, for such time as is necessary to enable this court to hear and determine this petition, in order to avoid additional harm to the petitioner.

(3) That the petitioner have such additional relief and process as may be deemed necessary and appropriate by this honorable court.

The alternative requests are denied for the reasons set forth with respect to the request for writ of mandamus.

OPINION

[1] Mandamus is an extraordinary remedy, available only in extraordinary circumstances and when no meaningful alternatives are available. *Kerr* v. *United States District Court*, 426 U.S. 394, 403 (1976); *Landis Tool Division* v. *U.S. International Trade Commission*, 614 F. 2d 766, 205 USPQ 112 (CCPA 1980). This court's power to issue a mandamus under the All Writs Act (28 U.S.C. 1651(a)) is limited to situations in which such action is necessary or appropriate in aid of its jurisdiction. *Margolis* v. *Banner*, 599 F. 2d 435, 440, 202 USPQ 365, 370 (CCPA 1979).

There are meaningful alternative legal remedies available here. For example, petitioner could have participated, and may still participate, in the expedited proceeding proffered by the ITC pursuant to paragraph 3 of its order. If adversely affected by a final determination in that proceeding, petitioner could appeal to this court. 19 U.S.C. 1337(c). Thus, mandamus is not necessary in aid of this court's jurisdiction.[2]

Petitioner would have us misuse the writ to circumvent normal appeal procedures and permit a collateral attack upon the legality of the ITC's exclusionary order. The order having issued more than 60 days before any action was taken by petitioner, a direct appeal of that order is not open to it. Efforts to obtain a court interpretation of the order by way of the present petition confuse the nature and purpose of mandamus with the nature and purpose of an appeal.

Petitioner urges that the writ of mandamus is appropriate to prevent irreparable harm, that is, loss of sales during the time required to complete an expedited paragraph 3 proceeding and a possible appeal to this court. The argument is devoid of merit. As stated by the Supreme Court in *Bankers Life & Cas. Co.* v. *Holland*, 346 U.S. 379, 383 (1953):

> [2] [I]t is established that the extraordinary writs cannot be used as substitutes for appeals, *Ex parte Fahey*, 332 U.S. 258, 259–260 (1947), even though hardship may result from delay and perhaps unnecessary trial, *United States Alkali Export Assn.* v. *United States*, 325 U.S. 196, 202–203 (1945); *Roche* v. *Evaporated Milk Assn.* [319 U.S. 21, 31 (1943)]; and whatever may be done without the writ may not be done with it. *Ex parte Rowland*, 104 U.S. 604, 617 (1882).[3]

---

[2] If petitioner attempts to export its pool covers into the United States, and the Customs Service bars entry, petitioner could file a protest. If its protest were denied, it could file a civil action in the U.S. court of International Trade, which has exclusive jurisdiction over civil actions involving the exclusion of merchandise. 28 U.S.C. 1582(a)(4). In that court action, petitioner could put into issue the legality of the ITC exclusionary order and could raise the issue it raises here, with appeal, if necessary, to this court. 28 U.S.C. 1541. See W. Herrington, International Trade Commission Patent Practice at R-1-32 (Patent Resources Group, Inc. 1979).

[3] Had petitioner requested institution of a par. 3 proceeding when that proceeding was proffered, it may well have had a decision on the merits by this time.

The ITC has authority to exclude goods from entry into the United States. Upon determining that a particular act of unfair competition in importation causes an injury to domestic industry, it has authority to devise a remedy. 19 U.S.C. 1337. In the light of its determination in investigation No. 337–TA–54, and because the matter involved a patented process, there were at least two remedies available to the ITC: (1) It could exclude multicellular plastic film from importation until the foreign manufacturer's process is shown not to be an infringement; (2) it could permit importation until Sealed Air Corp. proved that the foreign manufacturer's process does infringe.[4]

Remedy (1) would risk unfairness and injury to a foreign manufacturer whose process does not infringe by denying importation during the period necessary to establish non-infringement. Remedy (2) would risk continued unfairness and injury to the domestic industry, at the hands of a foreign manufacturer whose process did infringe, during the period necessary to prove infringement.

[3] Administrative agencies have considerable latitude to shape their remedies within the scope of their statutory authority, *SEC* v. *Chenery Corp.*, 332 U.S. 194, 207–209 (1947), having wide discretion in dealing with the problems entrusted to them, *FTC* v. *Cement Institute*, 333 U.S. 683, 726 (1948), and in determining the choice of remedy deemed adequate to cope with unlawful practices, *Jacob Siegel Co.* v. *FTC*, 327 U.S. 608, 611–613 (1946), *FTC* v. *Mandel Bros, Inc.*, 359 U.S. 385, 392 (1959). The relation of remedy to policy is peculiarly for the administrative agency and its special competence, *General Protective Committee* v. *SEC*, 346 U.S. 521, 534 (1954). Moreover, as pointed out by the Supreme Court in *Buttfield* v. *Stranahan*, 192 U.S. 470, 493, 496 (1904):

> As a result of the complete power of Congress over foreign commerce, it necessarily follows that no individual has a vested right to trade with foreign nations, which is so broad in character as to limit and restrict the power of Congress to determine what articles of merchandise may be imported into this country and the terms upon which a right to import may be exercised. This being true, it results that a statute which restrains the introduction of particular goods into the United States from considerations of public policy does not violate the due process clause of the Constitution.
>
> * * * * * * *
>
> * * * Congress legislated on the subject [free introduction of sugar, molasses, coffee, tea and hides] as far as was reasonably practicable, and from the necessities of the case was compelled to leave to executive officials the duty of bringing about the result pointed out by the statute. To deny the power of Congress to delegate such a duty would, in effect, amount but to declaring

[4] The record does not reflect any effort by petitioner for further ITC proceedings or for entry under bond.

that the plenary power vested in Congress to regulate foreign commerce could not be efficaciously exerted.

See also California Bankers Assn. v. *Schultz*, 416 U.S. 21, 59 (1974).

The ITC chose remedy (1). Whether this court would have devised the same remedy is irrelevant for the purpose of determining whether the court should issue a writ of mandamus.

The petition is denied.[5]

NIES, J., with whom BALDWIN, J., joins, dissenting.

Following an investigation entitled "In the Matter of Certain Multicellular Plastic Film, investigation No. 337-TA-54," the following order was entered:

> 1. Multicellular plastic film manufactured abroad in accordance with the process disclosed by claims 1 and 2 of U.S. Letters Patent 3,416,984 is excluded from entry into the United States for the remaining term of said patent except (1) as provided in paragraph 2 of this order, infra, or (2) as such importation is licensed by the owner of U.S. letters patent 3,416,984;
>
> 2. * * * [A provision for entry under bond of subject articles during the period, now expired, when the order was subject to disapproval by the President.]
>
> 3. That persons desiring to import multicellular plastic film into the United States may petition the Commission to institute such further proceedings as may be appropriate in order to determine whether the multicellular plastic film sought to be imported should be allowed entry into the United States.
>
> * * * * * * *

The above paragraph 3 has been implemented as follows:

> [P]ersons * * * desiring to import multicellular plastic film may petition the Commission to institute further proceedings for the purpose of determining whether the film sought to be imported should be allowed entry into the United States. With respect to film produced by foreign manufacturers who were not respondents in the Commission's investigation, paragraph 3 is intended to insure that only such film found upon further investigation not to have been manufactured by a process infringing claims 1 and 2 of the 984 will be allowed entry. The effect of paragraph 3 is to place the burden of establishing noninfringement upon would-be importers rather than to require complainant, the aggrieved party in this matter, to prove infringement. [See USITC publication 987 June 1979, pages 22-23.]

Petitioner was not named as a respondent in the above proceeding and the process it employs to manufacture plastic film has not been

---

[5] Petitioner's "Motion for Waiver of Rules and Expedited Hearing or Decision," the ITC's "Motion to Dismiss Requests for Stay and for Expedited Proceeding," the "Motion of Sealed Air Corporation to Intervene as Party Respondent," Sealed Air's "Motion to Dismiss," the "Motion of Sealed Air for Setting of a Procedure to Respond," and the ITC's "Motion to Dismiss Petition for Writs of Mandamus and Prohibition" are rendered moot in view of our denial of the petition.

the subject of an ITC investigation. Relief from this order is sought on the grounds that the ITC has acted beyond its jurisdiction and authority by ordering, even temporarily, the exclusion of the products of petitioner.

I agree with petitioner that a writ of mandamus or prohibition is a proper vehicle to bring this matter before this court. Further, I find the ITC has no authority to exclude articles prior to a determination that unfair methods of competition and unfair acts in their importation exist except in accordance with 1337(e). Under 1337(d), paragraph 1 of the order must be limited to the articles concerned in investigation No. 337-TA-54. Paragraph 3 should be eliminated.

JURISDICTION OF THIS COURT

The threshold question is whether this court can issue a writ of mandamus or prohibition under the All Writs Act, 28 U.S.C. 1651(a), under the circumstances of this case. The All Writs Act states:

> The Supreme Court and all courts established by Act of Congress may issue all writs necessary or appropriate in aid of their respective jurisdictions and agreeable to the usages and principles of law.

We have previously held that the question of whether an order is within the statutory authority of the ITC is within the appellate jurisdiction of this court. *Import Motors, Ltd.* v. *U.S. International Trade Commission*, 63 CCPA 57, 530 F. 2d 940, 188 USPQ 491 (1976). Moreover, except for the jurisdiction of the Supreme Court, this appellate jurisdiction is exclusive. *World-Wide Volkswagen Corp.* v. *U.S. International Trade Commission*, 414 F. Supp. 713, 191 USPQ 626 (1976).

AVAILABILITY OF REVIEW BY WRIT OF MANDAMUS OR PROHIBITION

The second question which must be answered is whether petitioner has raised the type of question which is appropriately a subject for mandamus action, precedent requiring that a writ of mandamus is to be employed only under extraordinary circumstances. See *Swindell-Dressler Corp.* v. *Dumbauld*, 308 F. 2d 267 (CA 3 1962); *In re Josephson*, 218 F. 2d 174 (CA 1 1954). Circumstances justifying the use of a writ are present when a trial court or federal agency subject to an appellate court's review has exceeded its authority or has acted without jurisdiction, or has failed to exercise jurisdiction in a proper case. See *Ex Parte United States*, 242 U.S. 27 (1916); *Webster Eisenlohr* v. *Kalodner*, 145 F. 2d 316 (CA 3 1944), *cert. denied*, 325 U.S. 867 (1945); *Swindell-Dressler Corp.* v. *Dumbauld*, *supra* at 271-72.

A writ should not be used to circumvent normal appeal procedures but may be used in aid of appellate jurisdiction or for the purpose of

reviewing conduct that is not otherwise reviewable by appeal.[6] In this case the time for appeal of the order of August 25, 1979, has expired. Further, under the procedure which the ITC has devised under paragraph 3 of its order, the basic order is not subject to attack. The issue in the paragraph 3 proceeding is limited to infringement or noninfringement.[7]

The ITC, in opposing the writ of mandamus, argues that the procedure available to petitioner under paragraph 3 is fair inasmuch as it provides petitioner with an opportunity for an expedited (i.e., less than 12 months) procedure [8] for determining whether its process would infringe the subject patent if practiced in the United States. It assumes that it may properly limit petitioner to this issue and may properly shift the burden of proof. It argues further that the exclusion may only be temporary and, thus, does not cause undue hardship.

A postjudgment proceeding to determine only the issue of infringement will not assist this court in its determination whether the ITC has exceeded its jurisdiction in issuance of the underlying order as to which the appeal period has expired. Accordingly, the grant of a writ of mandamus does not in this case thwart normal appeal procedures. Moreover, where the issue is of significant importance in the overall functioning of the tribunal below, not merely in the case at hand, *La Buy* v. *Howes Leather Co.*, 352 U.S. 249 (1957), is precedent for exercise of this discretionary power when the opportunity is presented.

Apart from the showing necessary to establish that petitioner has standing and is aggrieved by the ITC order, which I find has been adequately established here by affidavits,[9] no evidentiary material is needed to determine whether the ITC order is invalid on its face. Accordingly, the question is reached as to the validity of the order.

THE ITC EXCLUSION AUTHORITY

The ITC is an independent agency of the Government performing a mix of legislative, executive and judicial functions. Like any other administrative agency or board, it is entirely the creature of statute. *Civil Aeronautics Board* v. *Delta Air Lines, Inc.*, 367 U.S. 316 (1961);

---

[6] See *United States* v. *Weinstein*, 452 F. 2d 704, 711-13 (1971), where Judge Friendly holds that a writ of mandamus is not necessarily limited to cases where an existing or potential appeal would be frustrated.

[7] The ITC submission here includes a notice of investigation of another third party process which includes a specific statement that the determination shall be limited to the question of whether the process would infringe claims 1 or 2 of patent 984, if practiced in the United States. (For convenience, this is referred to as infringement.)

[8] In another case with a stipulated record, it is estimated that the expedited procedure will take 4½ months. No assurance was given to petitioner as to the time involved.

[9] Petitioner asserts that the selling periods for its products are seasonal and it will lose a full year's contracts unless it is allowed to import at this time.

Soriano v. *United States*, 494 F. 2d 681 (CA 9 1974). Any authority delegated or granted to an administrative agency is necessarily limited to the terms of the delegating statute. As Chief Justice Warren succinctly stated in *Civil Aeronautics Board*, *supra*, at 322, "[T]he determinative question is not what the Board thinks it should do, but what Congress has said it can do."

Section 1337(d) provides:

> If the Commission determines, as a result of an investigation under this section, that there is a violation of this section, it shall direct that the articles concerned, imported by any person violating the provision of this section, be excluded from entry into the United States.

In investigation No. 337–TA–54 the ITC noticed for investigation unfair acts in the importation of articles manufactured by certain named companies. No determination has been made that any unfair methods of competition are involved in the importation of products of Canadian Tarpoly, nor have the acts of those determined to have violated the statute been shown to be attributable to petitioner.[10] Appropriate findings as to products of petitioner are a condition precedent to their exclusion under 1337(d).[11]

Further, 1337(c) specifically states that:

> Each determination under subsection (d) * * * of this section shall be made on the record after notice and opportunity for a hearing in conformity with the provisions of subchapter 2 of chapter 5 of title 5. All legal and equitable defenses may be presented in all cases.

The ITC is apparently under the misconception that the finding in the investigation leading to the issuance of the exclusion order of August 25, 1979, that patent 984 is not invalid eliminates the necessity to

---

[10] The determinations of violations were based on default by Unipak and Conform, over whom the ITC asserts in personam jurisdiction. Unipak has appealed this determination. Appeal No. 80–4.

[11] From the legislative history, it is beyond question that the words "the articles concerned, imported by any person * * *" were inserted to avoid the result here. See 62 Cong. Rec. 11241–244 (1922), which contains the following discussion:

> Mr. LENROOT. [Senator from Wisconsin, later Associate Judge, United States Court of Customs and Patent Appeals, 1929–1944.] * * * So, under the amendment now proposed, if one importer has indulged in unfair competition, and a finding to that effect is sustained and reported to the President, because one importer has been guilty of wrongdoing the President may fix rates from 10 to 50 percent ad valorem upon all merchandise, either of that character or any different character.
>
> Mr. REED. Let me ask the Senator whether, in the case he has just put, it would not be much wiser if we provided penalties to be visited upon the particular importer who violated the proper practices, and reach it in that way, instead of reaching it by excluding everybody?
>
> Mr. LENROOT. I think that is the way to reach it. The Senator from Utah has just called my attention to one of the amendments which is intended to be proposed, which will limit it to merchandise imported in violation of this act. Do I understand from the Senator from Utah, then, that it will not be a general rate imposed upon all merchandise but will be a rate imposed upon merchandise imported by a given individual who is guilty of violation of the act?
>
> Mr. SMOOT. That is all there is to it, Mr. President. The criticism the Senator has just offered to the original paragraph is absolutely correct. Under that, if there had been one violation the President could have imposed the extra duty upon all importations, by any and every person, of that kind of merchandise, and that is why the committee is going to offer this amendment.
>
> Mr. LENROOT. I am very frank to say that that very greatly improves the section.

At that time the President issued the order following an investigation by the Tariff Commission [predecessor of the ITC] and had the authority to order either additional duties or refusal of entry.

reconsider that issue in the future. This is error. In denying petitioner the right to question validity, petitioner has been denied rights specifically afforded by the above quoted provisions of 1337(c). Petitioner is further judged to be in violation of the Act until it proves compliance. The imposition of such a burden of proof may well determine the outcome of litigation, and in my view this burden has been improperly placed on petitioner who is being treated differently from the named respondents in the investigation which led to the order, without justification or explanation. This attempt to shift the burden is proscribed by the Administrative Procedures Act 5 U.S.C. 556(d) (APA) and the Commission's own rules.[12]

If the ITC or Sealed Air, the original complainant, wishes to effect a temporary exclusion of the products of Canadian Tarpoly while the infringement question is under consideration, it must do so in accordance with 1337(e). Under that section Congress has provided additional protection for a person in the position of petitioner. One whose products are affected by an exclusion order during the pendency of an investigation is entitled to entry of its goods under bond.

I find the creation of a proceeding of the nature described in paragraph 3 ultra vires of the authority of the ITC.

THE VIEW OF MAJORITY

The majority states that there are at least two "meaningful legal remedies" available to petitioner here without resort to mandamus. The first is the paragraph 3 procedure for determination of the sole issue of infringement, which I have previously discussed.

As a second, the majority suggests that petitioner secure an appealable judgment from the U.S. Court of International Trade by making a shipment of its pool covers to the United States, and, assuming the articles are refused entry, filing a protest with Customs and, assuming that is refused, instituting proceedings before the Court of International Trade (formerly the U.S. Customs Court), and then appealing to this court. I cannot agree with the majority that the availability of a collateral attack on an ITC order by this contrived action against acts of Customs cures the deprivation of a right of direct appeal to this court, given to petitioner under 19 U.S.C. 1337(c) and which the scope of the order has effectively precluded.[13]

---

[12] The complainant has the burden of proof of infringement under 19 CFR 210.42(a). Cf. *Exxon Corp.* v. *F.T.C.*, 411 F. Supp. 1362, 1379 (D.C. Del. 1976). The ITC has no published rules pertaining to a par. 3 type proceeding.

[13] 19 U.S.C. 1337(c) reads in part:

> Any person adversely affected by a final determination of the Commission under subsection (d), (e), or (f) of this section may appeal such determination to the United States Court of Customs and Patent Appeals.

In *Import Motors, Ltd.* v. *U.S. International Trade Commission*, 63 CCPA 57, 530 F. 2d 940, 189 USPQ 491 (1976), this court indicated that appeal rights are not limited to parties below.

Clearly, petitioner is adversely affected by a final order of the ITC which is devised to preclude one in the position of petitioner from raising substantive appealable issues and has been denied relief therefrom. The use of mandamus authority will do no more than preserve the full appellate jurisdiction of this court.

The majority treats the question here simplistically as one involving the exercise of discretion by the Commission in choosing between two legal remedies, one of which better protects the interests of U.S. industry and, thus, reasonably was chosen. It is not. The question is whether the chosen remedy is within the Commission's statutory authority. The majority divorces the Commission's authority to issue exclusionary orders from the express limitation in 1337(d) that a determination of violation must precede its direction that the articles concerned be excluded from entry. Appropriate findings as to the articles concerned in this petition have not been made and the articles, thus, cannot be excluded by an order under 19 U.S.C. 1337(d).

The majority's reliance on *Buttfield* v. *Stranahan*, 192 U.S. 470 (1904), is misplaced. The issue here is not whether the statute is a valid exercise of Congress' plenary power over foreign commerce and whether that power has been properly delegated to the ITC. The issue is whether the ITC has acted in accordance with its statutory mandate. I find that it has not.

Finally, the majority's interpretation of the statute is irreconcilable with the minimum standards set forth in the APA which has been specifically made applicable to ITC adjudications. The APA requires notice, hearing, and findings prior to imposition of a sanction. That the order or effect may be temporary or only an initial determination does not make it sustainable. Cf. *Ligon Specialized Hauler Inc.* v. *I.C.C.* 587 F. 2d 304, 315–20 (CA 6 1978).

United States Court of International Trade

One Federal Plaza

New York, N.Y. 10007

Chief Judge

Edward D. Re

Judges

Paul P. Rao
Morgan Ford
Scovel Richardson
Frederick Landis
James L. Watson
Herbert N. Maletz
Bernard Newman
Nils A. Boe

Senior Judge

Samuel M. Rosenstein

Clerk

Joseph E. Lombardi

Decisions of the United States Court of International Trade

(Slip Op. 81–11)

AUDIOVOX CORP., PLAINTIFF *v.* THE UNITED STATES, DEFENDANT

Court No. 78–9–01645

FM Converters

"RADIO RECEIVER"—COMMON MEANING—FM CONVERTERS

The subject FM converters, consisting of a tuner and 1400 kHz fixed oscillator, receive FM radio waves and convert them into AM

radio band signals. After installation of the converter in an automobile equipped with an AM radio receiver, the FM converter permits the user to listen to FM broadcasts on the AM radio receiver. To obtain FM reception, the AM radio must be tuned to 1400 kHz and the FM converter turned on. FM stations are selected by the tuning knob on the FM converter, but volume must be controlled by the volume knob on the AM radio. The issue is whether FM converters are radio receivers within the purview of item 685.21, TSUS. In an opinion by Newman, J., the court finds that since the converters lack an audio amplifier and any means to control the volume of sound, and in FM to AM signal conversion, the converters do not function as radio receivers, nor are they known in the electronics trade as radio receivers, they are not within the common or commercial understanding of that term, as used in item 685.21, TSUS. In essence, FM converters are a radio accessory that allows the user to adapt his AM car radio to receive FM transmission, and hence are properly dutiable as other radiobroadcasting reception apparatus under item 685.25, TSUS, as claimed by plaintiff.

[Judgement for plaintiff.]

(Decided January 27, 1981)

Mandel & Grunfeld, Esqs. (*Steven P. Florsheim* and *Robert B. Silverman*, Esqs. of counsel) for the plaintiff.

Thomas S. Martin, Acting Assistant Attorney General: *Joseph I. Liebman*, Attorney in Charge, International Trade Field Office, Commercial Litigation Branch (*Madeline B. Kuflik*, trial attorney) for the defendant.

NEWMAN, Judge: In this action, plaintiff contests the classification by Customs at the Port of New York of certain merchandise impordet from Taiwan during the years 1977 and 1978 described on the commercial invoices as "FM Micro-Converter Radio, Model No. FMC–1C, Audiovox Brand." Customs classified the imports (excepting those in entry No. 519854) as solid state (tubeless) radio receivers designed for motor-vehicle installation, and assessed duty at the rate of 10.4 per centum ad valorem, as specified in item 685.21 of the Tariff Schedules of the United States (TSUS). In entry No. 519854, Customs classified the merchandise under item 685.24, TSUS, which provides for the same rate of duty on solid state (tubeless) radio receivers other than those designed for motor-vehicle installation. However, defendant has abandoned its classification under item 685.24, and contends that the merchandise in entry No. 519854 is likewise properly dutiable under item 685.21, TSUS.

Plaintiff claims that the subject merchandise is properly dutiable as radiobroadcasting reception apparatus other than radio receivers at the rate of 6 per centum ad valorem, either under item 685.25, TSUS,

336-951 O - 81 - 3

as modified by T.D. 68–9 (respecting the merchandise entered in 1977), or item 685.29, TSUS, as modified (respecting the merchandise entered in 1978).[1] Alternatively, plaintiff claims that the merchandise is properly dutiable at the rate of 5.5 per centum ad valorem under the provision in item 688.40, TSUS, as modified, for electrical articles and electrical parts of articles, not specially provided for.

ISSUE PRESENTED

Plaintiff concedes that the imports are solid-state (tubeless) devices designed for motor-vehicle installation. (R. 4). The basic dispute is whether the FM converters are classifiable as "radio receivers".

FINDINGS OF FACT[2]

After hearing the testimony of the witnesses, examining the exhibits, and considering the briefs of counsel for the respective parties, the court makes the following findings of fact, separately numbered:

1. The imported FM converters are solid-state (tubeless) devices designed for motor-vehicle installation.

2. After installation of the converter in an automobile equipped with an AM radio receiver, the FM converter permits the user to listen to FM broadcasts on the AM radio receiver. The sole function of the FM converter is to receive FM radio waves and to convert them into AM radio band signals. Thus, the audio information that was broadcast on an FM station is presented in an AM format so that it can be played through an AM radio. To perform its function, the converter first receives the FM waves, decodes the audio information on them and then encodes them on an AM signal of frequency. Hence, the FM converter allows the user to adapt his AM car radio receiver to receive FM transmission.

3. To function properly, the converter must be connected between the automobile antenna and the antenna receptacle of the AM radio receiver. An FM converter is installed in an automobile by disconnecting the antenna cable from the AM radio, plugging the cable into the receptacle on the back of the converter, and connecting a similar cable at the back of the converter to the antenna receptacle on the AM radio. The power lead wire at the back of the converter is then attached to any available 12-volt electrical terminal, and the unit is mounted in a convenient location with the bracket provided.

---

[1] Plaintiff incorrectly believes that item 685.29, TSUS, is applicable to the 1978 entries of merchandise, which occurred in February 1978. However, item 685.29, TSUS, applies only to merchandise entered on or after April 11, 1978. See Presidential Proclamation 4561 of Apr. 7, 1978, 43 F.R. 15127 (1978).

[2] The record in this case consists of the testimony of six witnesses (five for plaintiff and one for defendant) and eight exhibits (five for plaintiff and three for defendant). The official papers were received in evidence as an unmarked exhibit.

4. AM radio reception is obtained by operating the AM radio in its usual manner. The FM converter is off at this time. To obtain FM reception, the AM radio must be tuned to 1400 kilohertz (kHz) and the FM converter turned on. FM stations are selected by the tuning knob on the FM converter, but volume must be controlled by the volume knob on the AM radio.

5. The FM converter has a tuner and 1400 kHz oscillator, but does not have an audio amplifier, transducer or volume control.

6. An audio amplifier is a device which takes the minute level of the audio signal product coming out of the detector stage (which corresponds to the original signal transmitted) and amplifies it or increases its strength to a suitable level where it is capable of driving a sound reproducing transducer, such as a speaker, headphone or earphone.

7. The term "transducer" refers to a device that changes one form of energy into another. With respect to radio receivers, the usual function of a transducer is to change an electrical signal into an acoustic or sound signal. This function is usually accomplished through speakers or headphones.

8. The production of sound is not a necessary requirement for a radio receiver. Although the transducer is the element which converts the audio electrical signal to audible sound, the transducer is not a necessary component of a radio receiver per se.

9. The output of an FM converter is not an audio signal, but is an AM (amplitude modified), RF (radio frequency) signal at approximately 1400 kHz.

10. An FM converter has a tuner which picks up radio frequency signals, amplifies the radio frequency signals, produces an intermediate frequency (IF) signal, and detects the audio information which has been modulated or encoded onto the incoming radio signal. The minute audio signal obtained from the tuner in the FM converter is then modulated onto a constant or fixed 1400 kHz carrier radio frequency signal produced by a fixed oscillator.

11. The 1400 kHz oscillator converts the audio signal into a signal which may be used by the AM receiver in the car.

12. The sound of an FM broadcast may be obtained from the tuner portion of the FM converter. At the trial, defendant's expert witness demonstrated that a radio broadcast on the FM converter may be heard by attaching a crystal earphone inside the unit to the output of the detector in the tuner portion of the converter. Defendant's witness was able to demonstrate some minimal sound production through a similarly attached loudspeaker.

13. The imports are referred to in the electronics trade as FM converters and not as radio receivers.

PARTIES' CONTENTIONS

Plaintiff maintains that since the FM converters do not have an audio amplifier and sound control, they do not fall within the common meaning of the term "radio receiver;" that the converters are properly classifiable as radiobroadcasting reception apparatus other than radio receivers inasmuch as they presumptively perform a broadcasting receiving function; and alternatively, that since the fixed 1400 kHz oscillator performs a second significant function, the imports are more than radio receivers or reception apparatus, and therefore are classifiable as electrical articles, not specially provided for.

Defendant contends that the FM converters fall within the common meaning of the term "radio receiver" since they are devices that convert radio waves into perceptible signals; and that lexicographic authorities do not require that a radio receiver have a separate audio amplifier or audio output. Alternatively, defendant asserts that if a radio receiver requires an audio amplifier, the imports are classifiable as unfinished radio receivers pursuant to General Interpretative Rule 10(h), TSUS.

CONCLUSIONS OF LAW AND DISCUSSION

Central to the issue presented is the common meaning of the term "radio receiver." Common meaning is always a matter of judicial knowledge, but courts may and do, consult dictionaries, lexicons, and other reliable sources of information as an aid to their knowledge. Further, in determining common meaning, the court may properly consider the testimony of witnesses, but such testimony is not binding and may be accepted or rejected as appears proper. See Sturm, Customs Law and Administration (1980), pp. 454–56, and cases cited.

The following lexicographic definitions of radio receiver have been called to the court's attention:

McGraw-Hill Dictionary of Scientific and Technical Terms (1974): Radio receiver—A radio receiver is a device that converts radio waves into intelligible sound or other perceptible signals.

IEEE Standard Dictionary of Electrical and Electronics Terms (1972): Radio receiver—A radio receiver is a device for converting radio frequency power into perceptible signals.

Cooke & Markus, Electronics & Nucleonics Dictionary (McGraw-Hill 1960): Radio receiver—A receiver that converts radio waves into intelligible sounds or other perceptible signals. Also called radio, radio set, and receiver set.

Both parties rely upon the foregoing definitions, but sharply disagree as to whether the imports convert radio waves into perceptible signals. But in my view, it is unnecessary to resolve the highly esoteric question of what constitutes a perceptible signal for purposes of the above technical definitions. Fundamentally, in the absence of contrary legislative intent, tariff terms are not to be construed in

accordance with a technical or scientific meaning where that meaning differs from the common or commercial meaning. See Sturm, supra, at 453, and cases cited. Moreover, "it is to be kept in mind that in a tariff statute Congress ordinarily employs terms in their commercial sense". *Esco Manufacturing Co., aka J. Hofert Co.* v. *United States*, 63 CCPA 71, 73, C.A.D. 1167, 530 F. 2d 949 (1976). See also *Ameliotex, Inc.* v. *United States*, 65 CCPA 22, C.A.D. 1200, 565 F. 2d 674 (1977).

Respecting the meaning of "radio receiver" as that term is used in the electronics trade, the court finds the testimony of plaintiff's five witnesses definitely more persuasive than the testimony of defendant's sole witness. Plaintiff's witnesses had long commercial experience in the consumer electronics industry and a thorough familiarity with the design and trade terminology related to radio receivers and FM converters. Defendant's sole witness, on the other hand, was a professor of electrical engineering and electrophysics at the Polytechnic Institute of New York, and as primarily a scientist and experimental analyst, had relatively limited trade experience.

The record in this case establishes by a clear preponderance of the evidence that a "radio receiver," as that term is commonly used in the electronics industry, consists of at least a tuner plus an audio amplifier.[3] *Cf. Symphonic Electronics Corp.* v. *United States*, 72 Cust. Ct. 211, C.D. 4543 (1974); *Symphonic Electronics Corp.* v. *United States*, 77 Cust. Ct. 147, C.R.D. 76–5 (1976). See also the schematic block diagrams in the "Encyclopaedia Britannica," 1970 edition, volume 18, pages 1092–93, which lend support to the testimony of plaintiff's witnesses.[4] The FM converters have a tuning section and a 1400 kHz fixed oscillator, but lack an audio amplifier. Defendant's demonstration at the trial (through its expert witness), that FM reception could be heard on the converter without an audio amplifier by tapping into the detector stage of the tuner portion of the converter with a crystal earphone, is not demonstrative that an FM converter is classifiable as a "radio receiver" as that term is commonly understood in the electronics trade. While defendant's demonstration proves that the function of the converters' 1400 kHz oscillator could be bypassed and the use of the AM radio eliminated, obviously the imports were not designed nor intended to be used in such contrived manner. Furthermore, the court may take judicial notice of the fact that headsets are not normally used as transducers in automobile radios, and that it would be quite unusual for a radio listener to attach a transducer to the output of the detector stage of an automobile radio receiver. Moreover, it is evident that the lack of any means of con-

[3] A low fidelity radio receiver (e.g. a table radio) for home entertainment normally includes, in addition to a tuner and audio amplifier, a speaker within its cabinet.

[4] It is interesting to note that the first radio receiver, demonstrated by Heinrich Hertz in Germany in 1887, consisted simply of an open wire loop with spheres attached to the ends to form a gap. The presence of radio waves was detected by observing a spark set up on the sphere gap. However, the Hertz device had no practical application. See "Encyclopaedia Britannica," 1970 ed., vol. 18, p. 1090.

trolling the volume of the sound would make any radio reception device commercially impracticable for use as a radio receiver in an automobile.

Unlike conventional radio receivers designed for automobile installation on which sound may be heard when connected to a speaker, FM converters in normal use are not capable of producing sound upon attachment to a speaker since the converter does not produce an audio signal as its end product. Rather, the end product of an FM converter is an AM radio frequency signal modulated by FM audio information. Such signal must be processed by the automotive AM radio—like any other AM signal—before an audible signal (sound) is produced. The short of the matter is the imports do not function as conventional radio receivers. The sole function of the FM converter is to receive and then convert FM radio signals into AM radio wave signals. Plainly, conventional radio receivers do not perform such FM to AM signal conversion function.

Notwithstanding that the subject imports were invoiced and described on their packaging as "FM Microconverter Radio," the record establishes that the converters are bought, sold, and referred to in the electronics trade as FM converters or converters, and not as radio receivers or as radios. Significantly, plaintiff's promotional literature (collective exhibit 5) shows that the terminology used by plaintiff in advertising and marketing the subject merchandise is FM converter (R. 175–180). And the fact that the imports bear a label showing compliance with the rules and regulations of the Federal Communications Commission pertaining to radio receivers (47 CFR part 15, subpart C) is not controlling as to their tariff classification. *Cf A. N. Deringer, Inc.* v. *United States*, 63 CCPA 37, 42, C.A.D. 1161, 524 F. 2d 1215 (1975). In any event, the instructions for completing FCC form 740, attached to the official entry papers, in enumerating the typical examples which require the use of the form, make a distinction between radio and TV receivers and converters.

In support of its contention that a "radio receiver" within the common meaning of that term is not required to have an audio amplifier or volume control (as claimed by plaintiff), defendant cites *Davar Products, Inc.* v. *United States*, 245 F. Supp. 460 (S.D.N.Y. 1965). There, the district court held that certain crystal or germanium diode radio receiving sets, which included a transducer and were suitable for use as conventional radios, were subject to the excise tax on radio receiving sets under section 4141 of the Internal Revenue Code of 1954, as amended. The district court found that although the germanium diode radios lacked certain features commonly found on noncrystal commercial radios, i.e., volume control, amplifier and correct tuning calibration, the radios in question were "capable of receiving and *aurally reproducing* broadcasts by commercial radio stations" (italic added) and were suitable for use as conventional radios, which was held to be the crucial factor.

Unlike the *Davar* radios, the subject FM converters are not capable of aurally reproducing broadcasts by commerical radio stations (except through an AM radio), and are not suitable for use as conventional radios. Consequently, *Davar* does not support the Government's position in the present case, but instead, tends to support plaintiff's argument.

Defendant's argument that the imports are classifiable under item 685.21, TSUS, as unfinished radio receivers by virtue of General Interpretative Rule 10(h),[5] is without merit. While amplification is performed by the audio amplifier of the car's AM radio, the latter is not a missing part of the converter. For purposes of converting FM to AM radio signals, the converters are imported and sold as complete units and require no finishing by the addition of an audio amplifier or sound control. Stated differently, the FM converters do not become finished radio receivers by connection to the automobile's AM radio, but in essence the converters are a complete radio accessory which permits the reception of FM broadcasts on the AM car radio.

In summary, inasmuch as the FM converters do not have an audio amplifier and volume control, nor in performing FM to AM signal conversion do they function as conventional radio receivers; and since they are not known as, or referred to, in the electronics industry as radio receivers, the imports are not within the common or commercial understanding of that term. Hence, plaintiff has overcome the presumption of correctness attaching to the classification of the Customs Service under item 685.21, TSUS.

We now turn to plaintiff's primary claim under item 685.25, TSUS, and its alternative claim under item 688.40, TSUS.

Although plaintiff has overcome the presumption that the imports are radio receivers, the presumption arising out of the classification under the superior heading to item 685.21 that they are radiobroadcasting reception apparatus stands intact. *United States* v. *New York Merchandise Co.*, 58 CCPA 53, C.A.D. 1004, 435 F. 2d 1315 (1970). Consequently, plaintiff's primary claim under item 685.25, TSUS is sustained.

Plaintiff has not established its alternative claim that the imports are more than radiobroadcasting reception apparatus by reason of their 1400 K Hz fixed oscillator. Indeed, plaintiff's witness Eric Sky testified that the FM converter is a reception apparatus (R. 57) and that the fixed oscillator is part of the reception device (R. 66). Therefore, plaintiff's attempt to transform conversion into a second significant function of the imported article separate and distinct from reception is unsupported by the record.

On the law and the facts, the court concludes:

Plaintiff has established that the subject merchandise was erroneously classified by Customs under item 685.21, TSUS, and has sus-

[5] This rule reads:
(h) unless the context requires otherwise, a tariff description for an article covers such article, whether assembled or not assembled, and whether finished or not finished;

tained its primary claim that the merchandise is properly dutiable under item 685.25, TSUS;

Plaintiff's alternative claim under item 688.40, TSUS, is dismissed.

Judgment will be entered accordingly.

(Slip Op. 81–12)

THE DE LAVAL SEPARATOR COMPANY, PLAINTIFF, v. UNITED STATES, DEFENDANT

Court No. 72–10–02161

On-farm bulk milking tanks

[Judgment for defendant.]

(Decided January 30, 1981)

Rode & Qualey (*John S. Rode* on the brief) for the plaintiff.

Thomas S. Martin, Acting Assistant Attorney General, *Joseph I. Liebman*, Attorney in Charge, International Trade Field Office, Commercial Litigation Branch (*James A. Resti* on the briefs), for the defendant.

FORD, Judge: This action is submitted to the court pursuant to a motion for summary judgment by defendant. The involved merchandise was originally the subject of a decision in *The De Laval Separator Company* v. *United States* (De Laval 1), 78 Cust. Ct. 95, C.D. 4693, 434 F. Supp. 656 (1977), rev'd 65 CCPA 48, C.A.D. 1204, 569 F. 2d 1134 (1978), reh. den. April 27, 1978. The record in De Laval 1 was incorporated herein.

The merchandise involved consists of stainless steel farm tanks which were imported without a refrigeration unit. They were classified by Customs under item 661.35, Tariff Schedules of the United States, as "refrigerators and refrigerating equipment, whether or not electric, and parts thereof" and were assessed with duty at 6 percent ad valorem.

Plaintiff contends the imported merchandise is entitled to entry free of duty under item 666.00, Tariff Schedules of the United States, for the reasons set forth, infra. Plaintiff further contends the doctrine of stare decisis is not applicable where there is a showing of clear error in the prior case or unlitigated issues of law or fact.

Defendant filed a motion for summary judgment pursuant to rules 8.2 and 4.12 of the rules of this court on the basis of the decision in De Laval 1, which it contends is stare decisis. The statement of material facts as to which there are no genuine issues of fact to be tried has been set forth by defendant as follows:

> 1. The merchandise involved in this case is described in the complaint as "Farm Tanks without refrigeration units."
>
> 2. The merchandise involved in this case is described on the commercial invoices included in the entry papers as "Farm Tanks without refrigeration units," and bear model numbers E550R, E600R0, E650R, E800R0, E1000R0, E1250R0, E1500R0, and

E2000R0. The merchandise imported under entry No. 72–119324, protest No. 3801–2–000306, while bearing the same model numbers (E800R0, E1000R0, E1500R0) are described on the commercial invoices as "Bulk Cooler."

3. The merchandise is identical in all respects to the merchandise involved in *De Laval Separator Co.* v. *United States*, 78 Cust. Ct. 95, C.D. 4693, 434 F. Supp 656 (1977), rev'd 65 CCPA 48, C.A.D. 1204, 569 F. 2d 1134 (1978), reh. den. April 27, 1978, the record of which has been incorporated in this action.

Plaintiff admits the foregoing but asserts the following, which it contends are genuine issues of fact to be tried:

1. A genuine issue of fact exists with respect to the question of whether or not the imported farm tanks are solely or chiefly used as a part of a refrigerator; it is plaintiff's contention that the imported farm tanks are neither solely nor chiefly so used.

2. A genuine issue of fact exists with respect to the question of whether the imported tanks are chiefly used to refrigerate milk; plaintiff contends that the imported tanks are solely and chiefly used for the handling of agricultural products.

3. A genuine issue of fact exists with respect to the question of whether the imported tanks are within the meaning of the term "milking machines" in item 666.00, TSUS, by virtue of their design, construction, and actual use. It is plaintiff's alternative claim herein that the farm tanks are so designed, constructed and used that they are, in fact, milking machines.

The Court of Customs and Patent Appeals in De Laval 1 has heretofore determined the issues in paragraphs 1 and 2 of plaintiff's statement as follows:

> We shall assume arguendo, without deciding, that the imported farm tanks are encompassed by the broad sweep of item 666.00. We shall assume, further, that the tanks are neither refrigerators nor refrigerating equipment within the meaning of item 661.35.
>
> Nevertheless, the imported farm tanks are clearly parts of refrigerators under item 661.35 because they are solely or chiefly used as parts of refrigerators. See General Interpretative Rule 10(ij) which states: "a provision for 'parts' of an article covers a product solely or chiefly used as a part of such article * * *." Each imported tank is designed so that, without modification, it may be connected to a refrigeration unit. The tank will not function and operate for the purpose for which it is intended without the refrigeration unit. In our view, the various nonrefrigeration functions which appellee attributes to the tanks (e.g., storage sanitation, mixing, measuring) are merely ancillary to the primary function of refrigerating milk on a dairy farm. Certainly, with respect to storage and sanitation, these functions are common to any refrigerator. We note that each tank as imported contains the following component parts: thermal insulation which helps maintain the milk in a cool state as long as possible; an agitator which moves the milk across the bottom of the tank and prevents freezing when the unit is operating; a built-in thermometer which indicates the temperature of the milk in the tank; and refrigeration and electrical control panels which control the refrigeration process. These component parts are all indicia of a product which, in the language of General Interpretative Rule 10(ij), is solely or chiefly used as a part of a refrigerator. [Pp. 49–50.]

It is noted the claim for milking machines contained in paragraph 3 of plaintiff's statement, supra, was contained in the complaint filed herein and in De Laval 1. Accordingly, plaintiff in De Laval 1 had the opportunity to present evidence with respect to the claim for milking machines. At least some evidence with respect to milking machines was in fact adduced by plaintiff in De Laval 1 through the testimony of Mr. Guest. The witness indicated the production of milk involves three major phases, i.e., the harvesting (milking), handling (conducting the milk to the tank), and storage in the tank. It is axiomatic that any claim which is not pressed is deemed abandoned.

The proposed testimony, as indicated in the affidavit of counsel for plaintiff, with respect to the use of the complete milking system would, in effect, be cumulative of the testimony of Mr. Guest. In any event, in the opinion of the court, such testimony would merely establish that said tanks are parts of the complete milking system. Therefore, headnote 1, schedule 6, part 4, subpart A would be controlling whether the court were to consider the provision for milking machines or the other claims made herein and in De Laval 1.

The Court of Customs and Patent Appeals made the following observation with respect to said headnote:

> Furthermore, we believe that headnote 1 of schedule 6, part 4, subpart A demonstrates a clear congressional preference for classification in subpart A vis-a-vis any other subpart of part 4. That headnote reads as follows: "A machine or appliance which is described in this subpart and also is described elsewhere in this part is classifiable in this subpart." The invasive language of this headnote is applicable to all other subparts of part 4; moreover, articles which meet the description of parts thereof in an item of subpart A are subject to the headnote. *Costa International Corp.* v. *United States*, 58 CCPA 48, C.A.D. 1003, 434 F. 2d 1053 (1970); *American SF Products, Inc.* v. *United States*, 61 Cust. Ct. 257, C.D. 3593, 291 F. Supp. 685 (1968). Applying the headnote, it follows that item 661.35, which is in subpart A, must prevail over item 666.00, which is in subpart C.
>
> Appellee contends that headnote 1 of schedule 6, part 4, subpart A is inapplicable because the imported merchandise is not a machine or appliance which is described in subpart A. It is clear from our discussion above that we disagree with this contention. * * * [P. 51.]

Additionally, plaintiff contends the decision of the appellate court in De Laval 1 is erroneous both with respect to the applicability of General Interpretative Rule 10(ij) and the question of whether the provision for on-farm equipment for handling or drying of agricultural products was a specific provision. The court addressed itself to the issue and stated as follows:

> Having decided that the imported tanks are parts of refrigerators under item 661.35, and assuming that they are also blanketed by item 666.00, we next must determine which item prevails. In this regard, the Customs Court was mindful of General Interpreta-

tive Rule 10(ij) which states: "a provision for 'parts' of an article covers a product solely or chiefly used as a part of such article, *but does not prevail over a specific provision for such part.*" [Italic added.] The court found that the provisions of item 666.00 are sufficiently specific to prevent classification as parts of refrigerators under item 661.35. We disagree.

Item 666.00 contains two provisions which are pertinent to the case at bar: (1) "on-farm equipment for the handling or drying of agricultural or horiticultural products," and (2) "agricultural and horticultural implements not specially provided for." Both provisions are, by their very terms, sweeping in scope.* Assuming that they encompass the imported farm tanks, it is quite clear that they also encompass countless other products which find utility on a farm. They are scarcely the "specific provisions" which would invoke the operation of General Interpretative Rule 10(ij) in order to prevent classification as parts of refrigerators under item 661.35. Neither provision of item 666.00 is an eo nomine or "specific provision," as that term is used in Rule 10(ij), for the imported farm tanks. See *Parts Manufacturing Associates* v. *United States*, 73 Cust. Ct. 42, 48, C.D. 4552, 377 F. Supp. 1356, 1359 (1974) * * *. [Pp. 50–51.]

*Contrast the provision in item 685.22 for "[r]adiotelegraphic and radiotelephonic transmission and reception apparatus; radio broadcasting and television transmission and reception apparatus and parts thereof." This provision was held to describe radios in detailed, definitive, and explicit language and, accordingly, to be a specific provision within the meaning of rule 10(ij). *Robert Bosch Corp.* v. *United States*, 63 Cust. Ct. 187, C.D. 3895, 305 F. Supp. 921 (1969).

Inasmuch as the newly claimed provision for milking machines is specific, the tanks would only be considered parts of the milking system as indicated supra. Rule 10(ij) would, therefore, have no applicability in such instance in view of headnote 1, schedule 6, part 4, subpart A. Rule 10(ij), being a rule of interpretation must yield to the congressional intent expressed in said headnote. *Esco Manufacturing Co. aka J. Hofert Co.* v. *United States*, 63 CCPA 71, C.A.D. 1167, 530 F. 2d 949 (1976).

The foregoing argument was presented by plaintiff to the Court of Customs and Patent Appeals in its motion for rehearing in De Laval 1, which was denied.

Plaintiff contends the doctrine of stare decisis is not applicable in this case. Plaintiff urges, by virtue of the new claim and clear error on the part of the Court of Customs and Patent Appeals in De Laval 1 that said doctrine is not controlling herein. The applicability of the doctrine of stare decisis is within the discretion of the court. *Hertz* v. *Woodman*, 218 U.S. 205 (1910); *Marianao Sugar Trading Corp.* v. *United States*, 29 Cust. Ct. 275, C.D. 1481 (1952), aff'd 41 CCPA 236, C.A.D. 557 (1954). Stare decisis in the instant action is, in the opinion of the court, applicable.

In view of the foregoing, defendant's motion for summary judgment is granted.

Judgment will be entered accordingly.

Decisions of the United States Court of International Trade

Abstracts

Abstracted Protest Decision

DEPARTMENT OF THE TREASURY, *February 2, 1981.*

The following abstracts of decisions of the United States Court of International Trade at New York are published for the information and guidance of officers of the customs and others concerned. Although the decisions are not of sufficient general interest to print in full, the summary herein given will be of assistance to customs officials in easily locating cases and tracing important facts.

WILLIAM T. ARCHEY,
Acting Commissioner of Customs.

DECISION NUMBER	JUDGE & DATE OF DECISION	PLAINTIFF	COURT NO.	ASSESSED	HELD	BASIS	ENTRY AND MERCHANDISE
				Par. or Item No. and Rate	Par. or Item No. and Rate		
P81/17	Richardson, J. January 26, 1981	F. W. Myers & Co., Inc.	73-5-01282-8	Item 608.05 0.3¢ per lb.	Item 608.02 Duty free	F. W. Myers & Co., Inc. v. U.S. (C.D. 4635)	Port Huron (Detroit) Sponge iron powders
P81/18	Maletz, J. January 26, 1981	The Titan Industrial Corp.	76-2-00313	Item 608.94 or 608.95 Duty assessed on full value of imported merchandise	Items 806.30/ 608.94 or 608.95 Duty assessable only on value of processing done abroad; refund of overpaid duties to be made to plaintiff respecting CE 119902 ($27,157.62) and CE 117390 ($44,120.45)	Agreed statement of facts	Houston American goods returned; metal articles
P81/19	Richardson, J. January 27, 1981	Sortex Co. of North America, Inc.	79-4-00709, etc.	Item 712.49 10%	Item 666.25 5.5%	Sortex Co. of North America, Inc. v. U.S. (C.D. 4746, aff'd C.A.D. 1221)	Boston Electronic color sorting machines and parts

Decision of the United States Court of International Trade

Abstracts

Abstracted Reappraisement Decisions

DECISION NUMBER	JUDGE & DATE OF DECISION	PLAINTIFF	COURT NO.	BASIS OF VALUATION	HELD VALUE	BASIS	PORT OF ENTRY AND MERCHANDISE
R81/41	Re, C.J. January 26, 1981	Marubeni America Corp.	73-9-02562	Export value	Unit values found by appraising customs official, less ocean freight and marine insurance, and without additions to said values for currency fluctuation	C.B.S. Imports Corp. v. U.S. (C.D. 4739)	New York Radio receivers
R81/42	Re, C.J. January 26, 1981	Marubeni America Corp.	75-8-02046	Export value	Unit values found by appraising customs official, less ocean freight and marine insurance, and without additions to said values for currency fluctuation	C.B.S. Imports Corp. v. U.S. (C.D. 4739)	New York Various articles

R81/43	Re, C.J. January 26, 1981	Marubeni America Corp.	79-7-01170	Export value	Unit values found by appraising customs official, less ocean freight and marine insurance, and without additions to said values for currency fluctuation	C.B.S. Imports Corp. v. U.S. (C.D. 4739)	New York Various types of plastic and/or polyester film
R81/44	Watson, J. January 26, 1981	Kanematsu N.Y., Inc. Kanematsu-Gosho (USA), Inc.	R68/1423, etc.	Cost of production	Invoiced unit prices, f.o.b. Japan	Given International, Inc. v. U.S. (C.D. 4624)	New York Lathes and accessories
R81/45	Re, C.J. January 27, 1981	Marubeni-Iida (America), Inc.	75-5-01401	Export value	Unit values found by appraising customs official, less ocean freight and marine insurance, and without additions to said values for currency fluctuation	C.B.S. Imports Corp. v. U.S. (C.D. 4739)	Chicago Round cornered square bars
R81/46	Boe, J. January 27, 1981	L. S. Ayres & Co.	247635-A	Cost of production	As indicated in schedule "A" attached to decision and judgment	Charles Stockheimer et al. v. U.S. (C.A.D. 642)	Indianapolis (Cleveland) Cashmere sweaters
R81/47	Boe, J. January 27, 1981	L. S. Ayres & Co.	267633-A	Cost of production	As indicated in schedule "A" attached to decision and judgment	Charles Stockheimer et al. v. U.S. (C.A.D. 642)	Indianapolis (Cleveland) Cashmere sweaters
R81/48	Boe, J. January 27, 1981	L. P. Seibold	273844-A	Cost of production	As indicated in schedule "A" attached to decision and judgment	Charles Stockheimer et al. v. U.S. (C.A.D. 642)	Baltimore Cashmere sweaters
R81/49	Boe, J. January 27, 1981	L. P. Seibold, Inc.	273922-A, etc.	Cost of production	As indicated in schedule "A" attached to decision and judgment	Charles Stockheimer et al. v. U.S. (C.A.D. 642)	Washington, D.C. (Baltimore) Cashmere sweaters

International Trade Commission Notices

Investigations by the U.S. International Trade Commission

DEPARTMENT OF THE TREASURY.

The appended notices relating to investigations by the United States International Trade Commission are published for the information of Customs Officers and others concerned.

WILLIAM T. ARCHEY,
Acting Commissioner of Customs.

In the Matter of CERTAIN COIN-OPERATED AUDIOVISUAL GAMES AND COMPONENTS THEREOF	Investigation No. 337-TA-87

Commission Hearing on the Presiding Officer's Recommendation and on Relief, Bonding, and the Public Interest, and the Schedule for Filing Written Submissions

AGENCY: U.S. International Trade Commission.

ACTION: The scheduling of oral arguments and briefing for investigation No. 337-TA-87, Certain Coin-Operated Audiovisual Games and Components Thereof.

Notice is hereby given that the presiding officer has issued a recommended determination that there is a violation of section 337 of the Tariff Act of 1930 (19 U.S.C. 1337) in the unauthorized importation into the United States and sale of certain coin-operated audiovisual games which are the subject of the Commission's investigation. Accordingly, the recommended determination and the record of the hearing have been certified to the Commission for review and a Commission determination. Interested persons may obtain copies of the nonconfidential version of the presiding officer's recommendation (and all other public documents on the record of the investigation) by contracting the Office of the Secretary, U.S. International Trade

Commission, 701 E Street NW., room 161, Washington, D.C. 20436; telephone 202–523–0161.

COMMISSION HEARING: The Commission will hold a public hearing on March 16, 1981, in the Commission's Hearing Room, 701 E Street NW., Washington, D.C. 20436, beginning at 10 a.m. The hearing will be divided into two parts. First, the Commission will hear oral arguments on the presiding officer's recommended determination that a violation of section 337 of the Tariff Act of 1930 exists. Second, the Commission will hear presentations concerning appropriate relief, the effect that such relief would have upon the public interest, and the proper amount of the bond during the Presidential review period, in the event that the Commission determines that there is a violation of section 337 and that relief should be granted. These matters will be heard on the same day in order to facilitate the completion of this investigation within time limits established under law and to minimize the burden of this hearing upon the parties. The procedure for each portion of the hearing follows.

ORAL ARGUMENTS: Any party to the Commission's investigation or any interested Government agency may present an oral argument concerning the presiding officer's recommended determination. Such arguments will be limited to 20 minutes (exclusive of time consumed by questions from the Commission or its advisory staff), unless the parties make a timely request for additional time for making their arguments based on a showing of need. This time may be used in any way the party or agency making argument sees fit, i.e., a portion of the time may be reserved for rebuttal or devoted to summation. The oral arguments will be held in the following order: complainant, respondents, Government agencies, and the Commission investigative attorney. Any rebuttals will be held in this order: respondents, complainant, Government agencies, and the Commission investigative attorney. Persons making oral argument are reminded that such argument must be based upon the evidentiary record certified to the Commission by the presiding officer.

ORAL PRESENTATIONS ON RELIEF, BONDING, AND THE PUBLIC INTEREST: If the Commission finds that a violation of section 337 has occurred, it may issue (1) an order which could result in the exclusion of the subject articles from entry into the United States and/or (2) an order which could result in one or more respondents being required to cease and desist from engaging in unfair methods of competition or unfair acts in the importation and sale of such articles. Accordingly, the Commission is interested in hearing presentations which address the form of relief, if any, which should be ordered.

If the Commission finds that a violation of section 337 has occurred and orders some form of relief, the President has 60 days to approve or disapprove the Commission's action. During this period, the subject articles would be entitled to enter the United States under a bond in an amount determined by the Commission and prescribed by the Secretary of the Treasury. The Commission is therefore interested in hearing presentations concerning the amount of the bond, if any, which should be imposed.

If the Commission concludes that a violation of section 337 has occurred and contemplates some form of relief, it must consider the effect of that relief upon the public interest. The factors which the Commission will consider include the effect that an exclusion order and/or a cease and desist order would have upon (1) the public health and welfare, (2) competitive conditions in the U.S. economy, (3) the U.S. production of articles which are like or directly competitive with those which are the subject of the investigation, and (4) U.S. consumers.

Following the oral arguments on the presiding officer's recommendation, parties to the investigation, Government agencies, public interest groups, and interested members of the public may make oral presentations on the issues of relief, bonding, and the public interest. Such presentations will be limited to 10 minutes (exclusive of time consumed by questions from the Commission and its advisory staff) and may include the testimony of witnesses. This portion of the hearing is legislative in nature; presentations need not be confined to the evidentiary record certified to the Commission by the presiding officer. Oral presentations on relief, bonding, and the public interest will be heard in the same order as oral arguments on the recommended determination.

WRITTEN SUBMISSIONS: In order to give greater focus to the hearing, the parties to the investigation, Government agencies, and the Commission investigative attorney are encouraged to file briefs on the issues of violation (to the extent they have not already briefed that issue in their written exceptions to the presiding officer's recommended determination), remedy, bonding, and the public interest. Such briefs must be filed not later than the close of business on March 10, 1981. During the course of the hearing, the parties may be asked to file posthearing briefs.

NOTICE OF APPEARANCE: Written requests to appear at the Commission hearing must be filed with the Office of the Secretary by March 10, 1981.

ADDITIONAL INFORMATION: The original copy and 11 true copies of all briefs must be filed with the Office of the Secretary not later than March 10, 1981. Any person desiring to discuss confidential

information, or to submit a document (or a portion thereof) to the Commission in confidence, must request in camera treatment unless the information has already been granted such treatment by the presiding officer. All such requests should be directed to the Secretary to the Commission and must include a full statement of the reasons why the Commission should grant such treatment. Documents or arguments containing confidential information approved by the Commission for in camera treatment will be treated accordingly. All non-confidential written submissions will be available for public inspection at the Secretary's Office.

Notice of this investigation was published in the Federal Register of June 25, 1980 (45 FR 124).

FOR FURTHER INFORMATION CONTACT: Clarease E. Mitchell, Esq., Office of the General Counsel, U.S. International Trade Commission; telephone 202–523–0148.

By order of the Commission.

Issued: February 5, 1981.

KENNETH R. MASON,
Secretary.

In the Matter of CERTAIN SCREW JACKS AND COMPONENTS THEREOF, INCLUDING COLD-WORKED PINION GEARS	Investigation No. 337–TA–98

Notice of Investigation

AGENCY: U.S. International Trade Commission.

ACTION: Institution of investigation pursuant to 19 U.S.C. 1337.

SUMMARY: Notice is hereby given that a complaint was filed with the U.S. International Trade Commission on January 8, 1981, and amended January 28, 1981, under section 337 of the Tariff Act of 1930 (19 U.S.C. 1337), on behalf of Auto Specialties Manufacturing Co., St. Joseph, Mich. 49085. The amended complaint alleges unfair methods of competition and unfair acts in the importation of certain screw jacks and components thereof, including cold-worked pinion gears, into the United States, or in their sale, because of the alleged infringement by said screw jacks and pinion gears of claims 1–6 of U.S. Letters Patent 3,862,577. The amended complaint further alleges that the effect or tendency of the unfair methods of competition and unfair acts is to destroy or substantially injure an industry, efficiently and economically operated, in the United States.

The complainant requests that, during the pendency of the investigations, exclusion from entry, except under bond, of the imports in question be ordered and that, after a full investigation, permanent exclusion from entry of the imports in question be ordered.

AUTHORITY: The authority for institution of this investigation is contained in section 337 of the Tariff Act of 1930 (19 U.S.C. 1337) and in section 210.12 of the Commission's Rules of Practice and Procedure.

SCOPE OF THE INVESTIGATION: Having considered the amended complaint, the U.S. International Trade Commission, on February 5, 1981, ordered that—

(1) Pursuant to subsection (b) of section 337 of the Tariff Act of 1930 (19 U.S.C. 1337(b)), an investigation be instituted to determine whether there is reason to believe there is a violation and whether there is a violation of subsection (a) of section 337 in the unlawful importation of certain screw jacks and components thereof, including pinion gears, into the United States, or in their sale, because of the alleged infringement by said screw jacks and pinion gears of claims 1–6 of U.S. Letters Patent 3,862,577, the effect or tendency of which is to destroy or substantially injure an industry, efficiently and economically operated, in the United States;

(2) For the purpose of this investigation so instituted, the following are hereby named as parties upon which this notice of investiga tion shall be served:

(a) The complainant is:

Auto Specialties Manufacturing Co.
643 Graves Street
St. Joseph, Mich. 49085

(b) The respondents are the following companies allegedly engaged in the unlawful importation of such articles into the United States, or in their sale, and are the parties upon which the amended complaint is to be served:

Seeburn Metal Products Ltd.
York Streets Box 460
Beaverton, Ontario
LOK 1AO, Canada

General Motors Corp.
3044 West Grand Boulevard
Detroit, Mich. 48202

Attention: Patent Counsel

(c) Samuel Bailey, Unfair Import Investigations Division, U.S. International Trade Commission, 701 E Street NW., Washington, D.C. 20436, shall be the Commission investigative attorney, a party to this investigation; and

(3) For the investigation so instituted, Donald K. Duvall, Chief Administrative Law Judge, U.S. International Trade Commission, 701 E Street NW., Washington, D.C. 20436, shall designate the presiding officer.

SUPPLEMENTARY INFORMATION: General Motors Corp. has been included as a respondent in paragraph 2(b) above on the basis of the informal investigatory activities of the Commission.

Responses must be submitted by the named respondents in accordance with section 210.21 of the Commission's Rules of Practice and Procedure (19 CFR 210.21). Pursuant to section 201.16(d) and 210.21(b) of the rules, such responses will be considered by the Commission if received not later than 20 days after the date of service of the amended complaint. Extensions of time for submitting a response will not be granted unless good and sufficient cause therefor is shown.

Failure of a respondent to file a timely response to each allegation in the amended complaint and in this notice may be deemed to constitute a waiver of the right to appear and contest the allegations of the amended complaint and this notice, and to authorize the presiding officer and the Commission, without further notice to the respondent, to find the facts to be as alleged in the amended complaint and this notice and to enter both a recommended determination and a final determination containing such findings.

The amended complaint, except for any confidential information contained therein, is available for inspection during official working hours (8:45 a.m. to 5:15 p.m.) in the Office of the Secretary, U.S. International Trade Commission, 701 E Street NW., Washington, D.C. 20436; telephone 202–523–0161.

FOR FURTHER INFORMATION CONTACT: Samuel Bailey, Unfair Import Investigations Division, U.S. International Trade Commission; telephone 202–523–1273.

By order of the Commission.

Issued: February 6, 1981.

KENNETH R. MASON,
Secretary.

In the Matter of
CERTAIN MULTICELLULAR PLASTIC FILM | Investigation No. 337–TA–54

Notice of Request For Public Comment

AGENCY: U.S. International Trade Commission.

ACTION: Notice is hereby given that Canadian Tarpoly Co. of Canada has requested that the Commission issue an advisory opinion concerning the exclusion order issued in the above-captioned investigation. The Commission asks that the members of the public

who wish to comment on the requested opinion submit their comments in writing within 30 days of the publication date of this notice.

AUTHORITY: The authority for this action is contained in section 337 of the Tariff Act of 1930 (19 U.S.C. 1337), under which the Commission has the authority to interpret and enforce its orders.

SUPPLEMENTARY INFORMATION: On December 19, 1980, the Commission received a petition from Canadian Tarpoly Co., a Canadian manufacturer of multicellular plastic film, requesting an advisory opinion on the scope of the exclusion order issued by the Commission on June 29, 1979 in the above-captioned investigation. The Commission order prohibits the entry of—

> Multicellular plastic film manufactured abroad in accordance with the process disc osed by claims 1 and 2 of U.S. Letters Patent 3,416,984 for the remaining term of said patent * * *.

The order also provides that—

> * * * persons desiring to import multicellular plastic film into the United States may petition the Commission to institute such further proceedings as may be appropriate in order to determine whether the multicellular plastic film sought to be imported should be allowed entry into the United States * * *.

The reason for this procedure is that it is impossible to distinguish, by visual or other means, film which infringes the '984 patent from film which does not infringe.

Canadian Tarpoly began to manufacture plastic film in 1980 and thus was not named as a respondent in the original section 337 investigation. In an effort to seek relief from the Commission's order, Canadian Tarpoly proposes to move manufacturing of the plastic film to the United States in anticipation of moving its entire pool cover manufacturing operation to the United States. Canadian Tarpoly states that, until the complete manufacturing operation is set up in the United States, it will ship the plastic film manufactured in this country to Canada for assembly of the pool covers and then reship them to the United States. Canadian Tarpoly asserts that its pool covers should be exempt from the Commission's order since the plastic film used would have been manufactured in the United States instead of Canada. Canadian Tarpoly has asked the Commission to issue an advisory opinion which states whether the above-described procedure violates the Commission's exclusion order.

The proposed procedure raises issues relating to the scope of the Commission's jurisdiction under 19 U.S.C. 1337a. Because the petition for an advisory opinion raises questions which affect the public interest, we are providing a comment period. Comments must be submitted within 30 days of the publication date of this notice.

FOR FURTHER INFORMATION CONTACT: Christine Bliss, Office of the General Counsel, U.S. International Trade Commission; telephone 202–523–0375.

By order of the Commission.

Issued: February 4, 1981.

KENNETH R. MASON,
Secretary.

In the Matter of CERTAIN APPARATUS FOR THE CONTINUOUS PRODUCTION OF COPPER ROD	Investigation No. 337–TA–89

Notice of Suspension of Investigation

AGENCY: U.S. International Trade Commission.

ACTION: Suspension of investigation.

SUMMARY: On February 3, 1981, the Commission voted to suspend investigation No. 337–TA–89 until the date on which the U.S. Court of Customs and Patent Appeals makes its final decision in Appeals Nos. 80–19 and 80–21.

SUPPLEMENTARY INFORMATION: Investigation No. 337–TA–89 was instituted by notice in the Federal Register on August 12, 1980 (45 F.R. 53932). Southwire Co. of Carrollton, Ga., is the complainant in this investigation. Krupp GmbH of the Federal Republic of Germany and Krupp International, Inc. of Harrison, N.Y., were named as respondents in the August 13 notice of investigation. On October 23, 1980, the Commission added Phelps Dodge Corp., as a respondent and voted to issue a temporary exclusion order, having found that there is reason to believe that section 337 is being violated.

On January 26, 1981, all of the parties to the above-captionedi nvestigation moved to suspend the investigation until the Court of Customs and Patent Appeals (C.C.P.A.) issues its final decisions in Appeals Nos. 80–19 and 80–21. Appeals Nos. 80–19 and 80–21 are appeals of Southwire Co., complainant in the Commission investigation, and Krupp GmbH and Krupp International, Inc., the respondents in the Commission investigation, of the Commission's final determination in investigation No. 337–TA–52. That investigation involved the patent at issue in the present investigation, U.S. Letters Patent 4,129,170 (the 170 patent) as well as the method equivalent of the 170 patent, U.S. Letters Patent 3,317,994.

On January 27, 1981, the Administrative Law Judge recommended that the Commission suspend the investigation and certified Motion

No. 89–28 to the Commission. Her recommendation to suspend the investigation was based upon the same reasons given by the parties.

The Commission's Action and Order in this matter is available for public inspection in the Office of the Secretary, U.S. International Trade Commission, 701 E Street NW., Washington, D.C. 20436; telephone 202–523–0161.

FOR FURTHER INFORMATION CONTACT: Jeffrey Neeley, Esq., Office of the General Counsel, U.S. International Trade Commission, 701 E Street NW., Washington, D.C. 20436; telephone 202–523–0359.

By order of the Commission.

Issued: February 3, 1981.

KENNETH R. MASON,
Secretary.

In the Matter of
CERTAIN MODULAR PUSHBUTTON SWITCHES AND COMPONENTS THEREOF } Investigation No. 337–TA–96

Order

Pursuant to my authority as Chief Administrative Law Judge of this Commission, I hereby designate Administrative Law Judge Janet D. Saxon as presiding officer in this investigation.

The secretary shall serve a copy of this order upon all parties of record and shall publish it in the Federal Register.

Issued: January 30, 1981.

DONALD K. DUVALL,
Chief Administrative Law Judge.

In the Matter of
CERTAIN STEEL ROD TREATING APPARATUS AND COMPONENTS THEREOF } Investigation No. 337-TA–97

Order No. 1

Pursuant to my authority as Chief Administrative Law Judge of this Commission, I hereby designate Administrative Law Judge Donald K. Duvall as presiding officer in this investigation.

best copy available

The secretary shall serve a copy of this order upon all parties of record and shall publish it in the Federal Register.

Issued: January 30, 1981.

DONALD K. DUVALL,
Chief Administrative Law Judge.

In the Matter of CERTAIN AIRTIGHT CAST-IRON STOVES	Investigation No. 337-TA-69

Notice of Modification of Orders

AGENCY: U.S. International Trade Commission.

ACTION: Modification of exclusion order and cease and desist orders.

SUMMARY: On February 3, 1981, the Commission modified the exclusion order and the cease and desist orders imposed against Heritage Stove Co. and Fireplace Distributors to allow the country of origin to be marked on the front, back, side, or top of the stoves imported or distributed by those firms.

SUPPLEMENTARY INFORMATION: On January 12, 1981, the Commission issued its action and order and opinion in the above-captioned investigation. The Commission issued an exclusion order and six cease and desist orders to remedy the violations of section 337 of the Tariff Act of 1930 by reason of common law trademark infringement, registered U.S. trademark infringement, and false and deceptive advertising.

The Commission stated in its opinion (pp. 16-17) that the relief ordered as to Heritage Stove Co. and Fireplace Distributors would allow those firms to import and market stoves which had the country of origin marked on the front, back, side, or top of the stove. The other defaulting respondents had been required to place the country of origin on the front of the stove.

The Commission's action and order in this matter is available for public inspection in the Office of the Secretary, U.S. International Trade Commission, 701 E Street NW., Washington, D.C. 20436; telephone 202-523-0161.

FOR FURTHER INFORMATION CONTACT: Jeffrey Neeley, Esq., Office of the General Counsel, U.S. International Trade Com-

mission, 701 E Street NW., Washington, D.C. 20436; telephone 202–523–0359.

By order of the Commission.

Issued: February 4, 1981.

KENNETH R. MASON,
Secretary.

In the Matter of
CERTAIN STEEL ROD TREATING APPARATUS AND COMPONENTS THEREOF } Investigation No. 337–TA–97

Designation of Commission Investigative Attorney

Donald R. Dinan is hereby designated as Commission investigative attorney in the above entitled investigation, effective this date.

Dated: February 3, 1981.

TALBOT S. LINDSTROM,
Chief,
Unfair Import Investigations Division.

U.S. GOVERNMENT PRINTING OFFICE : 1981 O - 336-951

Index

U.S. Customs Service

	T.D. No.
Treasury decisions:	
Carriers bonds	81-30
Consolidated aircraft bond	81-31
Reimbursable services	81-32

DEPARTMENT OF THE TREASURY
U.S. CUSTOMS SERVICE
WASHINGTON, D.C. 20229

OFFICIAL BUSINESS
PENALTY FOR PRIVATE USE, $300

POSTAGE AND FEES PAID
DEPARTMENT OF THE TREASURY (CUSTOMS)
(TREAS. 552)

U.S.MAIL

15/9

Customs Bulletin

Regulations, Rulings, Decisions, and Notices concerning Customs and related matters

and Decisions

of the United States Court of Customs and Patent Appeals and the United States Court of International Trade

Vol. 15 MARCH 4, 1981 No. 9

This issue contains

T.D. 81-33 through 81-35
Appeal to United States Court of Customs and Patent Appeals
Slip Op. 81-13 and 81-14
Protest abstracts P81/20 through P81/22
Reap. abstracts R81/50
International Trade Commission Notices

MAR 18 1981

U. S. CONT. PUBS.
DEPOSITORY 376

THE DEPARTMENT OF THE TREASURY
U.S. Customs Service

T1.11/3:

NOTICE

The abstracts, rulings, and notices which are issued weekly by the U.S. Customs Service are subject to correction for typographical or other printing errors. Users may notify the U.S. Customs Service, Logistics Management Division, Washington, D.C. 20229, of any such errors in order that corrections may be made before the bound volumes are published.

For sale by the Superintendent of Documents, U.S. Government Printing Office, Washington, D.C. 20402. Price: $2.25 (single copy domestic); $2.85 (single copy foreign). Subscription price: $85.00 a year domestic; $106.25 a year foreign.

U.S. Customs Service

Treasury Decisions

(T.D. 81-33)

Bonds

Approval and discontinuance of carriers bonds, Customs form 3587

Bonds of carriers for the transportation of bonded merchandise have been approved or discontinued as shown below. The symbol "D" indicates that the bond previously outstanding has been discontinued on the month, day, and year represented by the figures which follow. "PB" refers to a previous bond, dated as represented by figures in parentheses immediately following, which has been discontinued. If the previous bond was in the name of a different company or if the surety was different, the information is shown in a footnote at the end of the list.

Dated: February 12, 1981.

Name of principal and surety	Date of bond	Date of approval	Filed with district director/area director/amount
AAA Transfer, Inc., 615 So. 96th St., Seattle, WA; motor carrier; Safeco Ins. Co. of America. (PB 1/1/80) D 12/31/80 [1]	Dec. 29, 1980	Dec. 31, 1980	Seattle, WA $25,000
Ace Air Cargo Express, Inc., d.b.a.: Ace Cargo Service, 6410 Eastland Rd., Suite F, Brookpark, OH; Air Carrier; St. Paul Fire & Marine Ins. Co.	Jan. 14, 1981	Jan. 19, 1981	Cleveland, OH $50,000
B & B Trucking, Inc., 83 Egleston Rd., Westfield, MA; motor carrier; Hartford Accident & Indemnity Co. (PB 5/26/77) D 1/19/81 [2]	Dec. 8, 1980	Jan. 19, 1981	Boston, MA $25,000
Bels Product Co., Inc., P.O. Box 348, Montrose, MI; motor carrier; St. Paul Fire & Marine Ins. Co.	Dec. 26, 1980	Jan. 15, 1981	Laredo, TX $25,000
Border Truck Brokerage, Inc., 25 Lakeview Terrace, St. Albans, VT; motor carrier; St. Paul Fire & Marine Ins. Co.	Nov. 7, 1980	Jan. 12, 1981	Philadelphia, PA $25,000
Danis Transportation Co., Inc., 15 Hamlet Ave., Pawtucket, RI; motor carrier; Peerless Ins. Co.	Aug. 25, 1980	Jan. 12, 1981	Providence RI $25,000

Name of principal and surety	Date of bond	Date of approval	Filed with district director/area director/amount
Denver-Midwest Motor Freight, Inc. (A Co. Corp.) P.O. Box 996, Denver, CO; motor carrier; St. Paul Fire & Marine Ins. Co. D 1/20/81	Jan. 3, 1980	Mar. 3, 1980	El Paso, TX $25,000
Direct Winters Transport Ltd., #2 Tippett Rd., Downsview, Ontario, Canada; M3H 5X3; motor carrier; Reliance Ins. Co.	Nov. 13, 1980	Jan. 15, 1981	Detroit, MI $50,000
Frank P. Dow Co., Inc., Olympic National Bldg., Seattle, WA; motor carrier; Massachusetts Bay Ins. Co. D 8/11/80	Aug. 8, 1979	Sept. 14, 1979	Los Angeles, CA $50,000
Dunbar Transfer & Storage Co., Inc., 1726 Evelyn, Memphis, TN; motor carrier; Liberty Mutual Ins. Co.	Oct. 24, 1979	Dec. 12, 1979	New Orleans, LA $25,000
Eagle Express Co., 519 E. Second St. S. Boston, MA; motor carrier; Peerless Ins. Co.	Aug. 9, 1979	Jan. 26, 1981	Boston, MA $25,000
Hicklin Motor Lines, Inc., P.O. Box 377, St. Matthews, SC; motor carrier; Reliance Ins. Co. D 1/26/81	Jan. 7, 1974	Jan. 22, 1974	Charleston, SC $25,000
Hucks Piggyback Service, Inc., 1200 N. Tryon St., Charlotte, NC; motor carrier; Ins. Co. of North America	Dec. 9, 1980	Jan. 19, 1981	Wilmington, NC $25,000
Kartran Inc., 3310 Bobbie Lane, Graland, TX; motor carrier; St. Paul Fire & Marine Ins. Co.	Jan. 7, 1981	Jan. 7, 1981	Dallas/Fort Worth, TX $25,000
M & J Trucking Co., 20 Atlantic St., Bridgeport, CT; motor carrier; Aetna Casualty & Surety Co.	Dec. 12, 1980	Dec. 12, 1980	Bridgeport, CT $25,000
N.Y. N.J. Conn. Freight & Messenger Corp., 351 W. 38th St., N.Y., NY; motor carrier; Federal Ins. Co.	Nov. 27, 1980	Dec. 29, 1980	New York Seaport $50,000
Pozzi Brothers Transportation, Inc., 705 W. Meeker, Kent, WA; motor carrier; Aetna Ins. Co. (PB 3/31/71) D 12/11/80	Nov. 24, 1980	Dec. 11, 1980	Seattle, WA $25,000
Sewell Motor Express, Inc., 149 So. Mulberry St., Wilmington, OH; motor carrier; The Cincinnati Ins. Co.	Dec. 4, 1980	Jan. 7, 1981	Cleveland, OH $50,000
Sheans Freight Lines, Inc., 75 Locust St., Medford, MA; motor carrier; St. Paul Fire & Marine Ins. Co.	Aug. 6, 1979	Jan. 12, 1981	Boston, MA $25,000
Smith Transportation Co., 731 S. Lincoln, Santa Maria, CA; motor carrier; Hartford Accident & Indemnity Co.	Sept. 18, 1980	Jan. 12, 1981	Los Angeles, CA $50,000
Speedy Storage & Cartage (1975) Ltd., 2345 2nd Ave., A North, Lethbridge, Alberta, Canada; motor carrier; Seaboard Surety Co.	Dec. 16, 1980	Dec. 29, 1980	Great Falls, MT $25,000
Thames Valley Brick & Building Products, Ltd., 602 Grand Ave. E., P.O. Box 314, Chatham, Ontario, Canada; motor carrier; Transamerica Ins. Co. D 1/15/81	July 30, 1976	Sept. 29, 1976	Detroit, MI $100,000

Name of principal and surety	Date of bond	Date of approval	Filed with district director/area director/amount
United Transfer, Inc., 6898 N.W. 25th St., P.O. Box 520505, Miami, FL; motor carrier; American Casualty Co. of Reading, PA	Sept. 12, 1980	Dec. 18, 1980	Miami, FL $25,000
Wheeler Airlines, P.O. Box 12034, Research Triangle Park, NC; Air carrier; Ins. Co. of North America.	Dec. 15, 1980	Jan. 19, 1981	Wilmington, NC $25,000

[1] Surety is Mid-Century Ins. Co.
[2] Surety is Peerless Ins. Co.
[3] Surety is United Pacific Ins. Co.

BON-3-03

MARILYN G. MORRISON,
Director,
Carriers, Drawback and Bonds Division.

(T.D. 81-34)

Foreign Currencies—Variances From Quarterly Rate

The following rates of exchange are based upon rates certified to the Secretary of the Treasury by the Federal Reserve Bank of New York, pursuant to section 522(c), Tariff Act of 1930, as amended (31 U.S.C. 372(c)), and reflect variances of 5 per centum or more from the quarterly rate published in T.D. 81-13 for the following countries. Therefore, as to entries covering merchandise exported on the dates listed, whenever it is necessary for Customs purposes to convert such currency into currency of the United States, conversion shall be at the following rates.

Austria schilling:

February 2, 1981	$0.067092
February 3, 1981	.065692
February 4, 1981	.066357
February 5, 1981	.065876
February 6, 1981	.065811

Belgium franc:

February 2, 1981	$0.029394
February 3, 1981	.029189
February 4, 1981	.029472
February 5, 1981	.029044
February 6, 1981	.029163

Denmark krone:	
February 2, 1981	$0.153374
February 3, 1981	.151906
February 4, 1981	.154261
February 5, 1981	.151630
February 6, 1981	.152022
Finland markka:	
February 5, 1981	$0.246184
France franc:	
February 2, 1981	$0.204436
February 3, 1981	.203252
February 4, 1981	.205486
February 5, 1981	.202184
February 6, 1981	.203046
Germany deutsche mark:	
February 2, 1981	$0.471476
February 3, 1981	.468384
February 4, 1981	.473037
February 5, 1981	.465983
February 6, 1981	.467181
Ireland pound:	
February 2, 1981	$1.7630
February 3, 1981	1.7380
February 4, 1981	1.7640
February 5, 1981	1.7400
February 6, 1981	1.7430
Italy lira:	
February 2, 1981	$0.000995
February 3, 1981	.000988
February 4, 1981	.000995
February 5, 1981	.000981
February 6, 1981	.000986
Netherlands guilder:	
February 2, 1981	$0.434972
February 3, 1981	.431965
February 4, 1981	.435920
February 5, 1981	.420610
February 6, 1981	.430571
Portugal escudo:	
February 3, 1981	$0.017730
February 6, 1981	.017699
Spain peseta:	
February 6, 1981	$0.011772

Sri Lanka rupee:	
February 2–6, 1981	$0. 055991
Switzerland franc:	
February 2, 1981	$0. 520833
February 3, 1981	. 516262
February 4, 1981	. 521921
February 5, 1981	. 514403
February 6, 1981	. 514933

(LIQ–3–01 O:C:E)

Dated: February 6, 1981.

GWENN KLEIN KIRSCHNER,
Acting Chief,
Customs Information Exchange.

(T.D. 81–35)

Foreign Currencies—Daily Rates for Countries Not on Quarterly List

Rates of exchange based on rates certified to the Secretary of the Treasury by the Federal Reserve Bank of New York for the Brazil cruzeiro, People's Republic of China yuan, Hong Kong dollar, Iran rial, Philippines peso, Singapore dollar, Thailand baht (tical), and Venezuela bolivar

The Federal Reserve Bank of New York, pursuant to section 522(c), Tariff Act of 1930, as amended (31 U.S.C. 372(c)), has certified buying rates for the dates and foreign currencies shown below. The rates of exchange, based on these buying rates, are published for the information and use of Customs officers and others concerned pursuant to part 159, subpart C, Customs Regulations (19 CFR 159, subpart C).

Brazil cruzeiro:	
February 2–5, 1981	$0. 0146
February 6, 1981	. 0144
People's Republic of China yuan:	
February 2–3, 1981	$0. 620810
February 4–6, 1981	. 623908
Hong Kong dollar:	
February 2, 1981	$0. 189358
February 3, 1981	. 188413
February 4, 1981	. 189538
February 5–6, 1981	. 188857
Iran rial:	
February 2–6, 1981	Not available

Philippines peso:	
February 2–5, 1981	$0. 1320
February 6, 1981	. 1315
Singapore dollar:	
February 2–3, 1981	$0. 480769
February 4, 1981	. 483092
February 5, 1981	. 482393
February 6, 1981	. 481464
Thailand baht (tical):	
February 2–6, 1981	$0. 0484
Venezuela bolivar:	
February 2–6, 1981	$0. 2329

(LIQ–3–01 O:C:E)

Dated: February 6, 1981.

GWENN KLEIN KIRSCHNER,
Acting Chief,
Customs Information Exchange.

Appeal to United States Court of Customs and Patent Appeals

Appeal No. 81-5

CANADIAN TARPOLY CO. *v.* U.S. INTERNATIONAL TRADE COMMISSION

1. SEC. 337 TARIFF ACT OF 1930, AS AMENDED—ALL WRITS ACT—MANDAMUS

Mandamus is an extraordinary remedy, available only in extraordinary circumstances and when no meaningful alternatives are available. This court's power to issue a mandamus under the All Writs Act is limited to situations in which such action is necessary or appropriate in aid of its jurisdiction.

2. ID.

It is established that the extraordinary writs cannot be used as substitutes for appeals, even though hardships may result from delay and perhaps unnecessary trial; and whatever may be done without the writ may not be done with it.

3. SCOPE OF STATUTORY AUTHORITY OF ADMINISTRATIVE AGENCY

Administrative agencies have considerable latitude to shape their remedies within the scope of their statutory authority, having wide discretion in dealing with the problems entrusted to them, and in determining the choice of remedy deemed adequate to cope with unlawful practices. The relation of remedy to policy is peculiarly for the administrative agency and its special competence.

The attorneys in the above case are: For Canadian Tarpoly Co.: Fred S. Whisenhunt, Murray & Whisenhunt, P.O. Box 40574, Washington, D.C. 20016; for International Trade Commission: Christine Bliss.

(Decided: February 5, 1981)

Before MARKEY, Chief Judge, RICH, BALDWIN, MILLER, and NIES, Associate Judges.

MARKEY, Chief Judge.

Petitioner seeks a writ of mandamus against the International Trade Commission (ITC). We deny the petition.

BACKGROUND

The matter results from an ITC Investigation No. 337-TA-54, In the Matter of Certain Multicellular Plastic Film, conducted under

sections 337 and 337a of the Tariff Act of 1930, as amended (19 U.S.C. 1337 and 1337a). Sealed Air Corp. there alleged unfair methods of competition and unfair acts in the unlicensed importation into the United States of certain multicellular plastic film allegedly manufactured in a foreign country by the process covered in claims 1 and 2 of its U.S. Patent No. 3,416,984 (the '984 patent). Petitioner was not a respondent in that investigation.

Having completed its investigation on June 12, 1979, the ITC determined that: (1) Claims 1 and 2 of the '984 patent were not proven invalid; and (2) the unauthorized importation and sale of film made by an infringing process has the effect or tendency to destroy or substantially injure an industry, efficiently and economically operated in the United States.

Accordingly, on June 29, 1979, the ITC ordered that:

> 1. Multicellular plastic film manufactured abroad in accordance with the process disclosed by claims 1 and 2 of U.S. Letters Patent 3,416,984 is excluded from entry into the United States for the remaining term of said patent.
>
> * * * * * * *
>
> 3. That persons desiring to import multicellular plastic film into the United States may petition the (ITC) to institute such further proceedings as may be appropriate in order to determine whether the multicellular plastic film sought to be imported should be allowed entry into the United States;
>
> 4. That this order be published in the Federal Register and served upon each party of record in this investigation and upon * * * the Secretary of the Treasury.

As of June 29, 1979, the Secretary of the Treasury, acting through the Customs Service, has refused entry of multicellular plastic film into the United States pursuant to the ITC's exclusionary Order; 19 U.S.C. 1337(d).

Petitioner, a Canadian corporation, manufactures summer swimming pool covers by cutting and sewing multicellular plastic film. Petitioner asserts that the film it uses is manufactured in Canada by a process not covered by claims 1 and 2 of the '984 patent. When the ITC exclusionary order took effect, petitioner says U.S. dealers and distributors ceased to order its pool covers, causing irreparable harm.

Petitioner asserts that it became aware of the ITC order in the early part of September 1980, and that it contacted the ITC in the middle of that month to discuss an expedited proceeding under paragraph 3 of the order. The ITC proffered an expedited proceeding, to begin in the first week of October. However, believing that it would suffer irreparable harm during the ITC estimated 4½ months required for the proceeding, petitioner declined to participate in the proffered proceeding.

Instead, on November 7, 1980, petitioner filed a petition with the ITC, challenging the legality of the exclusionary order. On December 10, 1980, the ITC denied that petition, saying that the order was within the scope of its statutory authority and that the expedited proceeding provided for in paragraph 3 was the most appropriate way to decide whether the plastic film which petitioner wished to export to the United States was noninfringing. The ITC informed petitioner that "to obtain expedited relief it may file a petition with the (ITC) requesting the institution of a proceeding pursuant to paragraph 3 of the (Order)".

Between December 10–17, 1980, petitioner again contacted the ITC, asking whether its pool covers could enter the United States if petitioner manufactured film in the United States, shipped it to Canada for assembly of pool covers, then exported those pool covers into the United States. The ITC suggested that petitioner request an advisory opinion on that question.

Declining an expedited proceeding under paragraph 3 of the order, petitioner filed this petition for writ of mandamus on December 17, 1980.

Petitioner asserts that the ITC order in investigation No. 337–TA–54 "exceeds the statutory authority" of the ITC, illegally "extends the monopoly" of the '984 patent, "is unconstitutional because it results in a taking of petitioner's property without due process of law", and "is arbitrary and capricious and is a clear abuse of discretion."

Petitioner asks that we issue a writ of mandamus to the ITC, "directing that the said order be vacated forthwith, at least as it applies to the petitioner, and that the (ITC) forthwith order the appropriate Customs officials to immediately suspend its directives which exclude from entry into the United States the multicellular plastic film of the petitioner."[1]

OPINION

[1] Mandamus is an extraordinary remedy, available only in extraordinary circumstances and when no meaningful alternatives are available. *Kerr* v. *United States District Court*, 426 U.S. 394, 403 (1976); *Landis Tool Division* v. *U.S. International Trade Commission*, 614 F. 2d 766, 205 USPQ 112 (CCPA 1980). This Court's power to

[1] Alternatively, petitioner requests:

(2) (T)hat an order be issued, directed to the (ITC), requiring (it):

(a) to show cause in this Court, at a time to be designated, why (it) should not vacate the order forthwith, at least as it applies to the petitioner, and to show cause why (it) should not order the appropriate Customs officials to suspend its directives which exclude from entry into the United States the multicellular plastic film of the petitioner; and

(b) to immediately suspend the order, and notify the appropriate Customs officials of such suspension, for such time as is necessary to enable this Court to hear and determine this petition, in order to avoid additional harm to the petitioner.

(3) That the petitioner have such additional relief and process as may be deemed necessary and appropriate by this honorable Court.

The alternative requests are denied for the reasons set forth with respect to the request for writ of mandamus.

issue a mandamus under the All Writs Act (28 U.S.C. 1651(a)) is limited to situations in which such action is necessary or appropriate in aid of its jurisdiction. *Margolis* v. *Banner*, 599 F. 2d 435, 440, 202 USPQ 365, 370 (CCPA 1979).

There are meaningful alternative legal remedies available here. For example, petitioner could have participated, and may still participate, in the expedited proceeding proffered by the ITC pursuant to paragraph 3 of its order. If adversely affected by a final determination in that proceeding, petitioner could appeal to this court; 19 U.S.C. 1337(c). Thus, mandamus is not necessary in aid of this Court's jurisdiction.[2]

Petitioner would have us misuse the writ to circumvent normal appeal procedures and permit a collateral attack upon the legality of the ITC's exclusionary order. The order having issued more than 60 days before any action was taken by petitioner, a direct appeal of that order is not open to it. Efforts to obtain a court interpretation of the order by way of the present petition confuse the nature and purpose of mandamus with the nature and purpose of an appeal.

Petitioner urges that the writ of mandamus is appropriate to prevent irreparable harm, that is, loss of sales during the time required to complete an expedited paragraph 3 proceeding and a possible appeal to this court. The argument is devoid of merit. As stated by the Supreme Court in *Bankers Life & Cas. Co.* v. *Holland*, 346 U.S. 379, 383 (1953):

> **[2]** (I)t is established that the extraordinary writs cannot be used as substitutes for appeals, *Ex parte Fahey*, 332 U.S. 258, 259–260 (1947), even though hardship may result from delay and perhaps unnecessary trial, *United States Alkali Export Assn.* v. *United States*, 325 U.S. 196, 202–203 (1945); *Roche* v. *Evaporated Milk Assn.* [319 U.S. 21, 31 (1943)]; and whatever may be done without the writ may not be done with it. *Ex parte Rowland*, 104 U.S. 604, 617 (1882).[3]

The ITC has authority to exclude goods from entry into the United States. Upon determining that a particular act of unfair competition in importation causes an injury to domestic industry, it has authority to devise a remedy; 19 U.S.C. 1337. In the light of its determination in investigation No. 337–TA–54, and because the matter involved a patented process, there were at least two remedies available to the

---

[2] If petitioner attempts to export its pool covers into the United States, and the Customs Service bar entry, petitioner could file a protest. If its protest were denied, it could file a civil action in the U.S. Court of International Trade, which has exclusive jurisdiction over civil actions involving the exclusion of merchandise; 28 U.S.C. 1582(a)(4). In that court action, petitioner could put into issue the legality of the ITC exclusionary order and could raise the issue it raises here, with appeal, if necessary, to this court; 28 U.S.C. 1541. See W. Herrington, International Trade Commission Patent Practice at R-1-32 (Patent Resources Group, Inc. 1979).

[3] Had petitioner requested institution of a par. 3 proceeding when that proceeding was proffered, it may well have had a decision on the merits by this time.

ITC: (1) It could exclude multicellular plastic film from importation until the foreign manufacturer's process is shown not to be an infringement; (2) it could permit importation until Sealed Air Corp. proved that the foreign manufacturer's process does infringe.[4]

Remedy (1) would risk unfairness and injury to a foreign manufacturer whose process does not infringe by denying importation during the period necessary to establish non-infringement. Remedy (2) would risk continued unfairness and injury to the domestic industry, at the hands of a foreign manufacturer whose process did infringe, during the period necessary to prove infringement.

[3] Administrative agencies have considerable latitude to shape their remedies within the scope of their statutory authority, *SEC* v. *Chenery Corp.*, 332 U.S. 194, 207–209 (1947), having wide discretion in dealing with the problems entrusted to them, *FTC* v. *Cement Institute*, 333 U.S. 683, 726 (1948), and in determining the choice of remedy deemed adequate to cope with unlawful practices, *Jacob Siegel Co.* v. *FTC*, 327 U.S. 608, 611–613 (1946), *FTC* v. *Mandel Bros., Inc.*, 359 U.S. 385, 392 (1959). The relation of remedy to policy is peculiarly for the administrative agency and its special competence, *General Protective Committee* v. *SEC*, 346 U.S. 521, 534 (1954). Moreover, as pointed out by the Supreme Court in *Buttfield* v. *Stranahan*, 192 U.S. 470, 493, 496 (1904):

> As a result of the complete power of Congress over foreign commerce, it necessarily follows that no individual has a vested right to trade with foreign nations, which is so broad in character as to limit and restrict the power of Congress to determine what articles of merchandise may be imported into this country and the terms upon which a right to import may be exercised. This being true, it results that a statute which restrains the introduction of particular goods into the United States from considerations of public policy does not violate the due process clause of the Constitution.
>
> * * * * * * *
>
> * * * Congress legislated on the subject (free introduction of sugar, molasses, coffee, tea, and hides) as far as was reasonably practicable, and from the necessities of the case was compelled to leave to executive officials the duty of bringing about the result pointed out by the statute. To deny the power of Congress to delegate such a duty would, in effect, amount but to declaring that the plenary power vested in Congress to regulate foreign commerce could not be efficaciously exerted.

See also *California Bankers Assn.* v. *Schultz*, 416 U.S. 21, 59 (1974).

The ITC chose remedy (1). Whether this court would have devised the same remedy is irrelevant for the purpose of determining whether the court should issue a writ of mandamus.

---

[4] The record does not reflect any effort by petitioner for further ITC proceedings or for entry under bond.

The petition is denied.[5]

NIES, J., with whom BALDWIN, J., joins, dissenting.

Following an investigation entitled "In the Matter of Certain Multicellular Plastic Film, Investigation No. 337–TA–54," the following order was entered:

> 1. Multicellular plastic film manufactured abroad in accordance with the process disclosed by claims 1 and 2 of U.S. Letters Patent 3,416,984 is excluded from entry into the United States for the remaining term of said patent except (1) as provided in paragraph 2 of this order, infra, or (2) as such importation is licensed by the owner of U.S. Letters Patent 3,416,984;
>
> 2. * * * (A provision for entry under bond of subject articles during the period, now expired, when the order was subject to disapproval by the President.)
>
> 3. That persons desiring to import multicellular plastic film into the United States may petition the Commission to institute such further proceedings as may be appropriate in order to determine whether the multicellular plastic film sought to be imported should be allowed entry into the United States.
>
> * * * * * * *

The above paragraph 3 has been implemented as follows:

> (P)ersons * * * desiring to import multicellular plastic film may petition the Commission to institute further proceedings for the purpose of determining whether the film sought to be imported should be allowed entry into the United States. With respect to film produced by foreign manufacturers who were not respondents in the Commission's investigation, paragraph 3 is intended to insure that only such film found upon further investigation not to have been manufactured by a process infringing claims 1 and 2 of the '984 will be allowed entry. The effect of paragraph 3 is to place the burden of establishing noninfringement upon would-be importers rather than to require complainant, the aggrieved party in this matter, to prove infringement. (See USITC Publication 987, June 1979, pp. 22–23.)

Petitioner was not named as a respondent in the above proceeding and the process it employs to manufacture plastic film has not been the subject of an ITC investigation. Relief from this order is sought on the grounds that the ITC has acted beyond its jurisdiction and authority by ordering, even temporarily, the exclusion of the products of petitioner.

I agree with petitioner that a writ of mandamus or prohibition is a proper vehicle to bring this matter before this court. Further, I find the ITC has no authority to exclude articles prior to a determina-

---

[5] Petitioner's "Motion for Waiver of Rules and Expedited Hearing or Decision", the ITC's "Motion to Dismiss Requests for Stay and for Expedited Proceeding", the "Motion of Sealed Air Corporation to Intervene as Party Respondent", Sealed Air's "Motion to Dismiss", the "Motion of Sealed Air for Setting of a Procedure to Respond", and the ITC's "Motion to Dismiss Petition for Writs of Mandamus and Prohibition" are rendered moot in view of our denial of the petition.

tion that unfair methods of competition and unfair acts in their importation exist except in accordance with 1337(e). Under 1337(d), paragraph 1 of the order must be limited to "the articles concerned" in investigation No. 337–TA–54. Paragraph 3 should be eliminated.

JURISDICTION OF THIS COURT

The threshold question is whether this court can issue a writ of mandamus or prohibition under the All Writs Act, 28 U.S.C. 1651(a), under the circumstances of this case. The All Writs Act states:

> The Supreme Court and all courts established by Act of Congress may issue all writs necessary or appropriate in aid of their respective jurisdictions and agreeable to the usages and principles of law.

We have previously held that the question of whether an order is within the statutory authority of the ITC is within the appellate jurisdiction of this court. *Import Motors, Ltd.* v. *U.S. International Trade Commission*, 63 CCPA 57, 530 F. 2d 940, 188 USPQ 491 (1976). Moreover, except for the jurisdiction of the Supreme Court, this appellate jurisdiction is exclusive. *World-Wide Volkswagen Corp.* v. *U.S. International Trade Commission*, 414 F. Supp. 713, 191 USPQ 626 (1976).

AVAILABILITY OF REVIEW BY WRIT OF MANDAMUS OR PROHIBITION

The second question which must be answered is whether petitioner has raised the type of question which is appropriately a subject for mandamus action, precedent requiring that a writ of mandamus is to be employed only under extraordinary circumstances. See *Swindell-Dressler Corp.* v. *Dumbauld*, 308 F. 2d 267 (CA 3 1962); *In re Josephson*, 218 F. 2d 174 (CA 1 1954). Circumstances justifying the use of a writ are present when a trial court or a Federal agency subject to an appellate court's review has exceeded its authority or has acted without jurisdiction, or has failed to exercise jurisdiction in a proper case. See *Ex parte United States*, 242 U.S. 27 (1916); *Webster Eisenlohr* v. *Kalodner*, 145 F. 2d 316 (CA 3 1944), cert denied, 325 U.S. 867 (1945); *Swindell-Dressler Corp.* v. *Dumbauld*, *supra* at 271–72.

A writ should not be used to circumvent normal appeal procedures but may be used in aid of appellate jurisdiction or for the purpose of reviewing conduct that is not otherwise reviewable by appeal.[1] In this case the time for appeal of the order of August 25, 1979, has expired. Further, under the procedure which the ITC has devised under paragraph 3 of its order, the basic order is not subject to attack. The issue

[1] See *United States* v. *Weinstein*, 452 F. 2d 704, 711–13 (1971), where Judge Friendly holds that a writ of mandamus is not necessarily limited to cases where an existing or potential appeal would be frustrated.

in the paragraph 3 proceeding is limited to infringement or noninfringement.[2]

The ITC, in opposing the writ of mandamus, argues that the procedure available to petitioner under paragraph 3 is fair inasmuch as it provides petitioner with an opportunity for an expedited (i.e., less than 12 months) procedure[3] for determining whether its process would infringe the subject patent if practiced in the United States. It assumes that it may properly limit petitioner to this issue and may properly shift the burden of proof. It argues further that the exclusion may only be temporary and, thus, does not cause undue hardship.

A post-judgment proceeding to determine only the issue of infringement will not assist this court in its determination whether the ITC has exceeded its jurisdiction in issuance of the underlying order as to which the appeal period has expired. Accordingly, the grant of a writ of mandamus does not in this case thwart normal appeal procedures. Moreover, where the issue is of significant importance in the overall functioning of the tribunal below, not merely in the case at hand, *La Buy* v. *Howes Leather Co.*, 352 U.S. 249 (1957), is precedent for exercise of this discretionary power when the opportunity is presented.

Apart from the showing necessary to establish that petitioner has standing and is aggrieved by the ITC order, which I find has been adequately established here by affidavits,[4] no evidentiary material is needed to determine whether the ITC order is invalid on its face. Accordingly, the question is reached as to the validity of the order.

THE ITC EXCLUSION AUTHORITY

The ITC is an independent agency of the Government performing a mix of legislative, executive, and judicial functions. Like any other administrative agency or board, it is entirely the creature of statute. *Civil Aeronautics Board* v. *Delta Air Lines, Inc.*, 367 U.S. 316 (1961); *Soriano* v. *United States*, 494 F. 2d 681 (CA 9 1974). Any authority delegated or granted to an administrative agency is necessarily limited to the terms of the delegating statute. As Chief Justice Warren succinctly stated in *Civil Aeronautics Board, supra*, at 322, "(T)he determinative question is not what the Board thinks it should do, but what Congress has said it can do."

---

[2] The ITC submission here includes a notice of investigation of another third party process which includes a specific statement that the determination shall be limited to the question of whether the process would infringe claims 1 or 2 of patent '964, if practiced in the United States. (For convenience, this is referred to as infringement.)

[3] In another case with a stipulated record, it is estimated that the expedited procedure will take 4½ months. No assurance was given to petitioner as to the time involved.

[4] Petitioner asserts that the selling periods for its products are seasonal and it will lose a full year's contract unless it is allowed to import at this time.

Section 1337(d) provides:

> If the Commission determines, as a result of an investigation under this section, that there is a violation of this section, it shall direct that the articles concerned, imported by any person violating the provision of this section, be excluded from entry into the United States.

In investigation No. 337–TA–54 the ITC noticed for investigation unfair acts in the importation of articles manufactured by certain named companies. No determination has been made that any unfair methods of competition are involved in the importation of products of Canadian Tarpoly, nor have the acts of those determined to have violated the statute been shown to be attributable to petitioner.[5] Appropriate findings as to products of petitioner are a condition precedent to their exclusion under 1337(d).[6]

Further, 1337(c) specifically states that:

> Each determination under subsection (d) * * * of this section shall be made on the record after notice and opportunity for a hearing in conformity with the provisions of subchapter 2 of chapter 5 of title 5. All legal and equitable defenses may be presented in all cases.

The ITC is apparently under the misconception that the finding in the investigation leading to the issuance of the exclusion order of August 25, 1979, that patent '984 is not invalid eliminates the necessity to reconsider that issue in the future. This is error. In denying petitioner the right to question validity, petitioner has been denied rights specifically afforded by the above quoted provisions of 1337(c). Petitioner is further judged to be in violation of the act until it proves compliance. The imposition of such a burden of proof may well determine the outcome of litigation, and in my view this burden has

---

[5] The determinations of violations were based on default by Unipak and Conform, over whom the ITC asserts in personam jurisdiction. Unipak has appealed this determination. Appeal No. 80-4.

[6] From the legislative history, it is beyond question that the words "the articles concerned, imported by any person * * *" were inserted to avoid the result here. See 62 Cong. Rec. 11241-244 (1922), which contains the following discussion:

> Mr. LENROOT. (Senator from Wisconsin, later Associate Judge, United States Court of Customs and Patent Appeals, 1929-1944.) * * * So, under the amendment now proposed, if one importer has indulged in unfair competition, and a finding to that effect is sustained and reported to the President, because one importer has been guilty of wrongdoing the President may fix rates from 10 to 50 percent ad valorem upon all merchandise, either of that character or any different character.
>
> Mr. REED. Let me ask the Senator whether, in the case he has just put, it would not be much wiser if we provided penalties to be visited upon the particular importer who violated the proper practices, and reach it in that way, instead of reaching it by excluding everybody?
>
> Mr. LENROOT. I think that is the way to reach it. The Senator from Utah has just called my attention to one of the amendments which is intended to be proposed, which will limit it to merchandise imported in violation of this act. Do I understand from the Senator from Utah, then, that it will not be a general rate imposed upon all merchandise but will be a rate imposed upon merchandise imported by a given individual who is guilty of violation of the act?
>
> Mr. SNOOT. That is all there is to it, Mr. President. The criticism the Senator has just offered to the original paragraph is absolutely correct. Under that, if there had been one violation the President could have imposed the extra duty upon all importations, by any and every person, of that kind of merchandise, and that is why the committee is going to offer this amendment.
>
> Mr. LENROOT. I am very frank to say that that very greatly improves the section.

At that time the President issued the order following an investigation by the Tariff Commission (predecessor of the ITC) and had the authority to order either additional duties or refusal of entry.

been improperly placed on petitioner who is being treated differently from the named respondents in the investigation which led to the order, without justification or explanation. This attempt to shift the burden is proscribed by the Administrative Procedures Act 5 U.S.C. 556(d) (APA) and the Commission's own rules.[7]

If the ITC or Sealed Air, the original complainant, wishes to effect a temporary exclusion of the products of Canadian Tarpoly while the infringement question is under consideration, it must do so in accordance with 1337(e). Under that section Congress has provided additional protection for a person in the position of petitioner. One whose products are affected by an exclusion order during the pendency of an investigation is entitled to entry of its goods under bond.

I find the creation of a proceeding of the nature described in paragraph 3 ultra vires of the authority of the ITC.

THE VIEW OF MAJORITY

The majority states that there are at least two meaningful legal remedies available to petitioner here without resort to mandamus. The first is the paragraph 3 procedure for determination of the sole issue of infringement, which I have previously discussed.

As a second, the majority suggests that petitioner secure an appealable judgment from the U.S. Court of International Trade by making a shipment of its pool covers to the United States, and, assuming the articles are refused entry, filing a protest with Customs and, assuming that is refused, instituting proceedings before the Court of International Trade (formerly the U.S. Customs Court), and then appealing to this court. I cannot agree with the majority that the availability of a collateral attack on an ITC order by this contrived action against acts of Customs cures the deprivation of a right of direct appeal to this court, given to petitioner under 19 U.S.C. 1337(c) and which the scope of the order has effectively precluded.[8]

Clearly, petitioner is adversely affected by a final order of the ITC which is devised to preclude one in the position of petitioner from raising substantive appealable issues and has been denied relief therefrom. The use of mandamus authority will do no more than preserve the full appellate jurisdiction of this court.

---

[7] The complainant has the burden of proof of infringement under 19 CFR 210.42(a). *Cf. Exxon Corp.* v. *F.T.C.*, 411 F. Supp. 1362, 1379 (D.C. Del. 1976). The ITC has no published rules pertaining to a par. 3 type proceeding.

[8] 19 U.S.C. 1337(c) reads in part:

> Any person adversely affected by a final determination of the Commission under subsec. (d), (e), or (f) of this section may appeal such determination to the U.S. Court of Customs and Patent Appeals.

In *Import Motors, Ltd.* v. *U.S. International Trade Commission*, 63 CCPA 57, 530 F. 2d 940, 188 USPQ 491 (1976), this court indicated that appeal rights are not limited to parties below.

The majority treats the question here simplistically as one involving the exercise of discretion by the Commission in choosing between two legal remedies, one of which better protects the interests of U.S. industry and, thus, reasonably was chosen. It is not. The question is whether the chosen remedy is within the Commission's statutory authority. The majority divorces the Commission's authority to issue exclusionary orders from the express limitation in 1337(d) that a determination of violation must precede its direction that the articles concerned be excluded from entry. Appropriate findings as to the articles concerned in this petition have not been made and the articles, thus, cannot be excluded by an order under 19 U.S.C. 1337(d).

The majority's reliance on *Buttefield* v. *Stranahan*, 192 U.S. 470 (1904), is misplaced. The issue here is not whether the statute is a valid exercise of Congress' plenary power over foreign commerce and whether that power has been properly delegated to the ITC. The issue is whether the ITC has acted in accordance with its statutory mandate. I find that it has not.

Finally, the majority's interpretation of the statute is irreconcilable with the minimum standards set forth in the APA which has been specifically made applicable to ITC adjudications. The APA requires notice, hearing, and findings prior to imposition of a sanction. That the order or effect may be temporary or only an initial determination does not make it sustainable. Cf. *Ligon Specialized Hauler Inc.* v. *I.C.C.* 587 F. 2d 304, 315–20 (CA 6 1978).

United States Court of International Trade

One Federal Plaza

New York, N.Y. 10007

Chief Judge

Edward D. Re

Judges

Paul P. Rao
Morgan Ford
Scovel Richardson
Frederick Landis
James L. Watson
Herbert N. Maletz
Bernard Newman
Nils A. Boe

Senior Judge

Samuel M. Rosenstein

Clerk

Joseph E. Lombardi

Decisions of the United States Court of International Trade

(Slip Op. 81–13)

HAARMAN & REIMER CORPORATION, PLAINTIFF *v.* THE UNITED STATES, MALCOLM BALDRIGE, SECRETARY OF COMMERCE; PAUL O'DAY, ACTING UNDER SECRETARY OF COMMERCE FOR INTERNATIONAL TRADE, DEPARTMENT OF COMMERCE; WILLIAM T. ARCHEY, ACTING COMMISSIONER OF CUSTOMS; AND, ALL DISTRICT DIRECTORS OF CUSTOMS, DEFENDANTS; CHINA NATIONAL NATIVE PRODUCE & ANIMAL BY-PRODUCTS IMPORT AND EXPORT CORPORATION, INTERVENOR

Court No. 81–1–00027

Memorandum Opinion and Order Denying Application for Preliminary Injunction

(Dated February 2, 1981)

BOE, Judge: From an examination of the record in the instant proceedings, it appears that on June 9, 1980, the plaintiff herein filed a petition with the U.S. Department of Commerce seeking the imposition of antidumping duties on menthol imported from the People's Republic of China, alleging that such merchandise is being or is likely to be sold in the United States at less than fair value. On November 25, 1980, the plaintiff, by way of amendment to its original petition, asserted the existence of critical circumstances with respect to the said imports of menthol within the purview of 19 U.S.C. 1671b(e)(1).

In its preliminary determination published in the Federal Register on January 14, 1981, the Department of Commerce held that: (a) There is a reasonable basis to believe or suspect that exports of natural menthol from the People's Republic of China are being, or are likely to be, sold in the United States at less than fair value within the meaning of 19 U.S.C. 1673; (b) critical circumstances as alleged in plaintiff's amended petition do not exist with respect to imports of menthol from the People's Republic of China and, accordingly, liquidations will not be suspended retroactively in accordance with the statute so made and provided.

In its complaint instituting the above-entitled action, the plaintiff seeks: (1) To enjoin the defendants from liquidating any entries or withdrawals from warehouse for consumption of menthol imported into the United States from the People's Republic of China, which remain unliquidated, on or after 90 days prior to the publication of the preliminary determination of the Department of Commerce, that is—October 16, 1980; (2) to determine that critical circumstances exist with respect to imports of menthol from the People's Republic of China within the meaning of 19 U.S.C. 1671b(e)(1) or in the alternative, to remand the proceedings to the Department of Commerce for further investigation and consideration.

In a prior order of this court under date of January 15, 1981, the application of the plaintiff for a temporary restraining order seeking to enjoin the liquidation of any and all unliquidated entries of menthol from the People's Republic of China entered, or withdrawn from warehouse for consumption, on or after October 16, 1980, was denied.

In the within proceeding duly and regularly brought on for hearing before this court pursuant to its prior order, the plaintiff seeks to restrain the defendants pendente lite from liquidation of the unliquidated entries of menthol from the People's Republic of China entered or withdrawn from warehouse for consumption, on or after October 16,

1980. In said proceeding the plaintiff appeared by and through its attorneys, Eugene L. Stewart and Terence P. Stewart, the defendants appeared by and through one of its attorneys, Velta Melnbrencis, and the intervenor, China National Native Produce and Animal By-Products Import and Export Corp. (CNEC), appeared by and through its attorneys, Donald L. Cuneo, Charles B. Manuel, Jr., and Nancy B. Turck of the law firm of Shearman & Sterling.

The court having heard the evidence adduced, the arguments of counsel and considered the memoranda submitted by respective counsel together with all the files, documents, and papers contained in the record herein, accordingly enters its decision and order with respect to plaintiff's application for a preliminary injunction together with its memorandum opinion in connection therewith.

In considering the requisite standards that are a prerequisite to preliminary injunctive relief, the court initially turns its attention to the plaintiff's likelihood of success in the trial of the within action on the merits.

Plaintiff contends that inasmuch as section 516A of the Tariff Act of 1930 as added by the Trade Agreements Act of 1979 (19 U.S.C. 1516a) does not provide in an antidumping proceeding for a judicial review of a negative preliminary determination by the administering authority with respect to critical circumstances, such a review necessarily is properly predicated under the residual jurisdictional grant provided in section 201 of the Customs Court Act of 1980 (28 U.S.C. 1581(i)). In sum, the plaintiff relies on a recognized legal principle that in the absence of a persuasive showing that the legislative authority did not intend judicial review of a final administrative determination, a review will be accorded under the general principles of administrative law and the Administrative Procedure Act.[1] *Abbott Laboratories* v. *Gardner*, 387 U.S. 136 (1967).

Assuming for the purpose of argument that the challenged critical circumstances determination is a final agency action within the meaning of *Abbott Laboratories*, the judicial inquiry made must be as follows:

> Whether in the context of the entire legislative scheme the existence of that circumscribed remedy evinces a congressional purpose to bar agency action within its purview from judicial review. 387 U.S. at 141.

---

[1] It should be noted that the court does not conclude that the administrative determination in issue is a final agency action within the meaning of *Abbott Laboratories* and sec. 10(c) of the Administrative Procedure Act, 5 U.S.C. 704. In the statutory scheme of the Trade Agreements Act of 1979, the challenged critical circumstances determination is provided under 19 U.S.C. 1671b, which is denominated: Preliminary Determinations. A critical circumstances finding must be made as a part of the administering authority's final determination pursuant to 19 U.S.C. 1671d(a)(2). Sec. 1671d is denominated: Final Determinations. Congress' intent to make certain preliminary determinations reviewable only in connection with the final determination thereon is discussed on p. 6, infra.

For the reasons stated hereafter, this court finds that the entire legislative scheme, indeed, evinces a congressional intent to bar judicial review of the agency action in question.

The House Judiciary Committee Report, H. Rept. 96–1235 at 47, clearly indicates that section 1581(i), under which plaintiff predicates its present proceeding, is intended to be solely a residual grant of jurisdictional authority. It likewise clearly and expressly renounces any intention of creating a new cause of action thereby.

> *Subsection (i) intended only to confer subject matter jurisdiction upon the court, and not to create any new causes of action not founded on other provisions of law.* [Italic supplied.]

As further stated in the committee report, supra at 47:

> The purpose of this broad jurisdictional grant is to eliminate the confusion which currently exists as to the demarcation between the jurisdiction of the district courts and the Court of International Trade. This provision makes it clear that all suits of the type specified are properly commenced only in the Court of International Trade. The committee has included this provision in the legislation to eliminate much of the difficulty experienced by international trade litigants who in the past commenced suits in the district courts only to have those suits dismissed for want of subject matter jurisdiction. The grant of jurisdiction in subsection (i) will insure that these suits will be heard on their merits.

It is noteworthy that in the enactment of the Customs Court Act of 1980, the Congress was particularly attentive to its predecessor act, the Trade Agreements Act of 1979. The two legislative statutes, serving as companion measures, not only broadened the jurisdictional scope of this court, but also redefined the scope and extent of the judicial review of this court particularly with respect to the administration of the countervailing duty and antidumping laws provided by earlier legislation. Thus, in broadening the jurisdictional authority of this court the Congress clearly has been ever mindful of the definitive extent, nature and time of the judicial review which it has authorized in the Trade Agreements Act of 1979. Again, this fact has been emphasized in the House Committee Report to the Customs Court Act of 1980, supra at 48:

> As in the case of subsection (a) of proposed section 1581, it is the intent of the committee that the Court of International Trade not permit subsection (i), and in particular paragraph (4), to be utilized to circumvent the exclusive method of judicial review of those antidumping and countervailing duty determinations listed in section 516A of the Tariff Act of 1930 (19 U.S.C. 1516a), as provided in that section. Since subsection (i) merely confers jurisdiction on the court and does not create any new causes of action, H.R. 7540 does not change the rights of judicial review which exist under section 516A.

This court cannot conceive of any explanatory language on the part of a legislative authority with respect to its intent to be more explicit than the further words contained in the House Committee Report, supra at 48:

> *The committee intends that any determination specified in section 516A of the Tariff Act of 1930, or any preliminary administrative action which, in the course of proceeding, will be, directly or by implication, incorporated in or superceded by any such determination, is reviewable exclusively as provided in section 516A. For example, a preliminary affirmative antidumping or countervailing duty determination or a decision to exclude a particular exporter from an antidumping investigation would be reviewable, if at all, only in connection with the review of the final determination by the administering authority or the ITC.* [Italic supplied.]

Turning to the Trade Agreements Act of 1979, it appears clear that in adding section 735(a)(3) to the Tariff Act of 1930 (19 U.S.C. 1673d(a)(3)), the Congress has provided for the specific time when findings as to the existence of critical circumstances shall be made as well as the nature and content of such findings:

> (3) CRITICAL CIRCUMSTANCES DETERMINATIONS.—If the final determination of the administering authority is affirmative, *then that determination, in any investigation in which the presence of critical circumstances has been alleged under section 733(e), shall also contain a finding of whether*—
>
> (A)(i) there is a history of dumping in the United States or elsewhere of the class or kind of merchandise which is the subject of the investigation, or
>
> (ii) the person by whom, or for whose account, the merchandise was imported knew or should have known that the exporter was selling the merchandise which is the subject of the investigation at less than its fair value, and
>
> (B) there has been massive imports of the merchandise which is the subject of the investigation over a relatively short period. [Italic supplied.]

It is this final determination by the administering authority that Congress has specifically made judicially reviewable by this court. 19 U.S.C. 1516a(a)(2)(B). Contrary to the assertion of the plaintiff that the silence of the statute with respect to a judicial review of a negative preliminary determination by the administering authority as to critical circumstances mandates the initiation of such a review under 28 U.S.C. 1581(i), this court is of the opinion that the pattern of review as sculptured in 19 U.S.C. 1516a indicates the intent of the Congress to specifically define therein those determinations made by the administering authority which are to be subject to judicial review. Thus, it cannot be assumed that the absence of a provision providing for the specific judicial review of a negative preliminary determination as to critical circumstances is an unintentional omis-

sion. Rather it must be considered as a part of the overall pattern and design of congressional intent. In this connection it will be noted that section 1516a, in addition to not providing for review of negative preliminary determinations as to critical circumstances, likewise does not provide judicial review of any affirmative preliminary determination in an antidumping proceeding. Judicial review thereof is postponed until the time of the final determination. In short, in view of the definitive recognition which Congress has made with respect to the time and nature of the judicial review of preliminary determinations provided for in the Trade Agreements Act of 1979, this court is unable to accept the contention of the plaintiff that the absence of the right of judicial review of a negative preliminary determination as to critical circumstances legitimatizes the exercise of the provisions of the Administrative Procedure Act under the residual jurisdictional grant provided by section 1581(i). To hold otherwise would serve to foster and promote a patchwork of judicial review proceedings of administrative determinations in an antidumping investigation at timeframes which Congress clearly has indicated its intention to circumscribe.

It is the opinion of this court, therefore, that the plaintiff is unlikely to prevail in the trial of said action on the merits for the reason that said action has not been brought in conformity with the provisions of the Trade Agreements Act of 1979, which solely and exclusively provides for the time and manner of judicial review of the subject matter of the within proceeding.

This court is of the further opinion that in the instant proceedings, the plaintiff has failed to show to the satisfaction of the court its likelihood of success in the trial of this action on the merits with respect to the alleged error on the part of the administering authority in its negative preliminary determination as to the existence of critical circumstances.

Minimal credible evidence, if any, has been offered with respect to neither of the two alternative, but mandatory, findings requisite to an affirmative preliminary determination as to the existence of critical circumstances by the administering authority, namely: (1) a history of dumping in the United States or elsewhere relating to the class or kind of merchandise which is the subject of the investigation,[2] or (2) that the importer and/or the persons at whose account the merchandise was imported knew or should have known that the exporter was selling the merchandise which was the subject of the investigation at less than fair value.

---

[2] As explained in the House report to the Trade Agreements Act of 1979, 79, H. Rept. 96-317 at 63, "History of dumping may be found to exist if the kind or class of merchandise under investigation was subject to a *dumping finding* either in the United States or another country." [Italic supplied.] No evidence as to any such previous *dumping finding* has been adduced in this proceeding.

The time during which the investigation in question was conducted by the administering authority was extended pursuant to statute by virtue of its extraordinarily complicated nature. Unknown to any of the parties to this proceeding, a country other than the exporting nation was selected from a group of five or six other countries exporting similar merchandise as a surrogate in the making of the preliminary determination by the administering authority. Although statistics offered by the plaintiff indicate an increase in the removal of the subject merchandise from warehouse for consumption in greater quantities during the last quarter of 1980, in view of the testimony of the witnesses produced by the intervenor at the within proceedings, this court is in no manner satisfied that the plaintiff has demonstrated that the administering authority erred in not finding that the importers knew or should have known that the exporter was selling the subject merchandise at less than fair value.

In view of the foregoing conclusion of this court with respect to plaintiff's likelihood of success in a trial of this action on the merits, a prolonged discussion relating to the alleged irreparable injury which might be sustained by the plaintiff as a result of the failure of this court to grant a preliminary injunction is deemed unnecessary.

An affidavit by a staff attorney in the Department of Commerce, appended to defendants' memorandum brief, indicates that substantial amounts of menthol entered or withdrawn from warehouse for consumption in the period October 16, 1980 to January 14, 1981, may remain unliquidated. Plaintiff's evidence with respect to the alleged irreparable injury suffered thereby, consists, however, primarily of an affidavit made by an employee of the plaintiff containing statements, inter aliâ, based on information and belief that most or all of the Chinese menthol imported in the relevant 90-day period has not been sold to end-users and that lost revenues and price suppression would result from the presence of such Chinese menthol in the marketplace.

The evaluation of the sufficiency of the evidence of the character offered by the plaintiff, referred to in Wright and Miller, "Federal Practice and Procedure: Civil," section 2949 is of particular pertinence:

> (W)hen the primary evidence introduced by plaintiff is an affidavit made on information and belief rather than on personal knowledge, it generally is considered insufficient to support a motion for a preliminary injunction.

The statement in plaintiff's affidavit, however, is expressly contradicted by the testimony of witnesses presented by the intervenor at the hearing. The witnesses, who are major importers in the United States of Chinese menthol, testified that their contracts for the purchase of menthol from the Chinese exporter are made with a leadtime of approximately 6 months to 2 years prior to actual delivery and

importation and that generally all menthol so contracted is presold to their respective customers prior to actual delivery of the merchandise to the United States. It further appears that the last contract for the purchase of menthol from the Chinese exporter was made by the witness, Boody, in July 1980; whereas the last contract for the purchase of menthol from the Chinese exporter was made by the witness, Barasch, in January 1980.

Suffice it to say, it does not appear to the satisfaction of this court that the plaintiff has sustained its burden of demonstrating that irreparable injury will result to it by reason of the failure of this court to grant its application for a preliminary injunction.

The Government has filed at the time of hearing on the within application of the plaintiff its memorandum in opposition to plaintiff's motion for a preliminary injunction as well as in support of a motion to dismiss the above-entitled action for failure to state a claim upon which relief could be granted, filed contemporaneously therewith.

This court views defendants' motion to dismiss as dispositive in nature directed to the entire cause of action of the plaintiff and to which the plaintiff is entitled to respond in the manner provided by the rules of court. Accordingly, no disposition is or will be made with respect to defendants' motion to dismiss in the instant proceedings, said proceedings having been confined solely to the consideration of those matters pertaining and requisite to plaintiff's application for a preliminary injunction.

In view of the foregoing and good cause appearing, it is hereby

ORDERED that plaintiff's motion for a preliminary injunction, pendente lite, be and is hereby denied.

(Slip Op. 81–14)

ZENITH RADIO CORPORATION, PLAINTIFF v. UNITED STATES, DEFENDANT

Court No. 80–5–00861

Order and Memorandum on Defendant's Motion to Dissolve or Modify Preliminary Injunction

(Dated February 2, 1981)

MALETZ, Judge:

1. Defendant's motion to dissolve or in the alternative to modify the preliminary injunction issued by the court on December 9, 1980, is hereby denied.

2. While jurisdiction of the court to entertain this action is undisputed, a few comments on this aspect are worthy of note. As

originally enacted, section 701(a) of the Customs Courts Act of 1980 (Public Law 96–417, 94 Stat. 1747) specified that the jurisdictional provisions of 28 U.S.C. 1581(i) "shall take effect on November 1, 1980." On December 17, 1980—subsequent to the court's issuance of the preliminary injunction in question—the Technical Amendments Act was enacted to (among other things) limit the jurisdictional grant set forth in 28 U.S.C. 1581(i) "to civil actions commenced on or after the effective date of this act," i.e., November 1, 1980. Public Law 96–542.

The complaint in this action was filed on June 27, 1980, and an amended complaint was filed on November 3, 1980. Against this background, rule 15(c) of this court provides that an amended complaint relates back to the date of the original pleading. Manifestly, were this rule to be construed as requiring the amended complaint to relate back to June 27, 1980, the complaint would have to be dismissed for lack of jurisdiction since 28 U.S.C. 1581(i) does not apply to civil actions instituted in June 1980. However, as defendant agrees, such an interpretation would be at odds with rule 1(a) of this court which provides that the rules "shall be construed to secure the just, speedy, and inexpensive determination of every action." Given the fact that 28 U.S.C. 2636(i), as added by the Customs Courts Act of 1980, allows a 2-year limitation period for commencing a civil action over which this court has jurisdiction under 28 U.S.C. 1581(i), dismissal of the present action for lack of jurisdiction would merely have the effect of requiring plaintiff to refile its amended complaint in the form of a new complaint. Such a requirement not only would be inconsistent with the thrust of rule 1(a), it would exalt form over substance. In view of these circumstances, the present civil action is deemed filed on November 3, 1980, and therefore the court has jurisdiction pursuant to 28 U.S.C. 1581(i), as amended.

Decisions of the United States Court of International Trade

Abstracts

Abstracted Protest Decisions

DEPARTMENT OF THE TREASURY, *February 9, 1981.*

The following abstracts of decisions of the United States Court of International Trade at New York are published for the information and guidance of officers of the Customs and others concerned. Although the decisions are not of sufficient general interest to print in full, the summary herein given will be of assistance to Customs officials in easily locating cases and tracing important facts.

WILLIAM T. ARCHEY
Acting Commissioner of Customs.

DECISION NUMBER	JUDGE & DATE OF DECISION	PLAINTIFF	COURT NO.	ASSESSED	HELD	BASIS	PORT OF ENTRY AND MERCHANDISE
				Par. or Item No. and Rate	Par. or Item No. and Rate		
P81/20	Boe, J. February 4, 1981	Continental Machine Tool Co.	79-4-00666	Item 534.95 70%	Item 766.25 Free of duty	Judgment on the pleadings	Los Angeles Antiques
P81/21	Boe, J. February 4, 1981	Futaba Industries USA	80-5-00871	Item 720.42 12.5%	Item 685.70 4%	U.S. v. Texas Instruments Inc. (C.A.D. 1243)	Los Angeles Numerical display tubes
P81/22	Boe, J. February 4, 1981	Sumitomo Corporation of America	79-7-01077	Item 610.80 11%	Item 660.15 7%	Agreed statement of facts	Philadelphia Parts of economizers and auxiliary plants for use with steam and other vapor generating boilers

Decisions of the United States Court of International Trade

Abstracts

Abstracted Reappraisement Decision

DECISION NUMBER	JUDGE & DATE OF DECISION	PLAINTIFF	COURT NO.	BASIS OF VALUATION	HELD VALUE	BASIS	PORT OF ENTRY AND MERCHANDISE
R81/50	Boe, J. February 4, 1981	B. Altman & Co. et al.	274900–A, etc.	Cost of production	As indicated in schedule "B" attached to decision and judgment	Agreed statement of facts	New York Cashmere sweaters

Appeal to the United States Court of Customs and Patent Appeals

APPEAL 81–9.—S. J. Style Associates, Ltd., et al. *v.* Dennis Snyder, et al., AN ORDER DENYING PLAINTIFFS' MOTION FOR PRELIMINARY INJUNCTION. Appeal From Order of January 12, 1981 (Slip Op. 81–2).

In this case, plaintiffs' filed an application for a temporary restraining order and preliminary injunction seeking to enjoin the defendants from implementing a directive referred to as pipeline No. 524, which was issued by the Regional Commissioner of New York Region on November 7, 1980. The court heard and considered the evidence presented by the parties through their respective witnesses, the arguments presented as well as memoranda submitted by counsel, and, upon conclusion of the testimony and within proceedings, the court presented orally in open court its opinion and decision concerning plaintiffs' application. In its opinion and decision, the court denied plaintiffs' motion for preliminary injunction.

In its notice of appeal, plaintiffs-appellants state their dissatisfaction with the opinion and decision of the U.S. Court of International Trade in refusing to issue an injunction in this matter and request the U.S. Court of Customs and Patent Appeals to review the questions involved therein, and to grant such relief in the premises as the court shall seem just.

It is claimed that the U.S. Court of International Trade erred in issuing an interloctory order refusing to issue an injunction in this matter; in abusing the trial court's discretion in ruling upon the merits of the action; in finding and holding that CFR subsection 141.62(a) was a delegation of authority to the Regional Commissioner of Customs at the Port of New York to prohibit the filing of entry documentation, and the authorization of merchandise released at John F. Kennedy International Airport, and Newark Seaport; in finding and holding that the action was moot because the Regional Commissioner stated that pipeline 524 would not be implemented in its present form; in finding and holding that plaintiffs failed to establish that plaintiffs would be irreparably harmed by the issuance of pipeline 524; in finding and holding that the irreparable injury to plaintiffs was out-

weighed by the public interest; in finding and holding that the court should not review or inhibit the actions of public officials where questions of integrity are involved; in finding and holding that a greater showing of irreparable injury was required here; in finding and holding that plaintiffs did not have a likelihood of success on the merits; in not finding and holding that plaintiffs would be irreparably injured; in not finding and holding that the actions of the Regional Commissioner of Customs were arbitrary and capricious; in finding and holding contrary to the weight of undisputed facts, contrary to law and the intent of Congress; in not finding and holding that pipeline 524 was rulemaking pursuant to 5 U.S.C. 553 and that Federal Register notice was required; and in not issuing findings of facts and conclusions of law in accordance with rule 52 of the rules of the U.S. Court of International Trade.

International Trade Commission Notices

Investigations by the U.S. International Trade Commission

DEPARTMENT OF THE TREASURY

The appended notices relating to investigations by the U.S. International Trade Commission are published for the information of Customs officers and others concerned.

R. E. CHASEN,
Commissioner of Customs.

In the Matter of
CERTAIN POULTRY DISK PICKING MACHINES AND COMPONENTS THEREOF } Investigation No. 337–TA–78

Notice of Termination

AGENCY: U.S. International Trade Commission.

ACTION: Termination of investigation on the basis of settlement agreement.

SUMMARY: Having reviewed the record of the investigation, the parties' settlement agreement, and the recommendation of the presiding officer, the Commission has voted to grant motion docket No. 78–3 and has ordered the termination of investigation No. 337–TA–78, "Certain Poultry Disk Picking Machines and Components Thereof."

PETITIONS FOR RECONSIDERATION: Any party wishing to petition for reconsideration of the Commission's action must do so within 14 days after service of the Commission's order. Such petitions must be in conformity with section 210.56 of the Commission's rules of practice and procedure (19 CFR 210.56).

SUPPLEMENTAL INFORMATION: This investigation was instituted on February 27, 1980 (45 F.R. 12932), following receipt of a complaint filed on behalf of Stork-Gamco, Inc., a manufacturer and

distributor of poultry-processing apparatus. The complaint, as amended, alleged the violation of section 337(a) of the Tariff Act of 1930 with respect to the importation into the United States and the sale of certain poultry disk picking machines which are alleged to infringe claims 3, 6, and 8 of U.S. Letters Patent 3,197,809. Two parties were named as respondents: Machinefabriek Meyn, B.V., and Meyn, USA, Inc.

Prior to and concurrently with the Commission's investigation, the parties had been engaged in Federal civil litigation which involved the same subject matter and issues similar to those before the Commission. At the conclusion of a trial on the issues of patent validity and infringement, the court ruled that U.S. Letters Patent 3,197,809 was valid and that the machines manufactured and sold by respondents do not infringe claims 3, 6, and 8 of that patent. Following issuance of the court's written decision, the complainant and the respondents entered a written agreement settling all matters in controversy which were still pending before the court and before the Commission.

As a result of the settlement agreement, the complainant filed a motion (docket No. 78–3) on September 8, 1980, requesting termination of the Commission's investigation. The motion was signed by all parties, including the Commission investigative attorney. On September 12, 1980, the presiding officer issued a recommended determination that the investigation be terminated.

Pursuant to its obligations to safeguard the public interest and to seek advice and information from other Government agencies during the course of these proceedings, the Commission solicited written comments concerning the impact that the proposed termination would have upon the public interest. A notice requesting public comment was published in the Federal Register of December 17, 1980 (45 F.R. 83037), and letters were sent to the appropriate agencies and departments. No comments were received.

ADDITIONAL INFORMATION: The Commission's action and order, the settlement agreement, and all other public documents on the record of this investigation are available for public inspection during official business hours (8:45 a.m. to 5:15 p.m.) at the Office of the Secretary, U.S. International Trade Commission, 701 E Street NW., room 156, Washington, D.C. 20436; telephone 202–523–0161.

FOR FURTHER INFORMATION CONTACT: Phyllis N. Smithey, Esq., Office of the General Counsel, U.S. International Trade Commission, 701 E Street NW., room 224, Washington, D.C. 20436; telephone 202–523–0321.

By order of the Commission.

Issued: February 5, 1981.

KENNETH R. MASON,
Secretary.

(332–122)

Study of the Economic Impact on the Domestic Jewelry Industry of the Subdivision of Item 740.10 of the Tariff Schedules of the United States for Purposes of the Generalized System of Preferences

AGENCY: U.S. International Trade Commission.

ACTION: As a result of a request of February 5, 1981, from the Senate Committee on Finance to give favorable consideration to any request from domestic interests for an extension of the date for the public hearing for the subject investigation, the Commission has rescheduled the hearing for investigation No. 332–122 from February 19, 1981, to March 30, 1981. The hearing will be held in the conference room of the Biltmore Hotel, Kennedy Plaza, Providence, R.I., beginning at 10 a.m., e.s.t. All persons shall have the right to appear by counsel or in person, to present information, and to be heard. Requests to appear at the public hearing should be filed with the Secretary, U.S. International Trade Commission, 701 E Street NW., Washington, D.C. 20436, not later than noon, March 24, 1981.

FOR FURTHER INFORMATION CONTACT: Mr. Peter Bodde, General Manufacturers Division, Office of Industries, U.S. International Trade Commission, Washington, D.C. 20436; telephone 202–724–1730.

SUPPLEMENTARY INFORMATION:

REQUEST FOR EXTENSION

The Commission's initial notice of investigation No. 332–122 containing information on investigation coverage, the public hearing, and related information, was published in the Federal Register of January 22, 1981 (46 F.R. 7108). On February 5, 1981, the Commission received a Senate Finance Committee request to give favorable consideration to any request by a domestic interest for extension of the date of the public hearing for the investigation. On February 6, 1981, a letter was received from a representative of the domestic jewelry industry requesting that the hearing be postponed 3 weeks until sometime after March 9, 1981.

WRITTEN SUBMISSIONS

In lieu of or in addition to appearances at the public hearing, interested persons are invited to submit written statements concerning the investigation. Commercial or financial information which a submitter desires the Commission to treat as confidential must be submitted on separate sheets of paper, each clearly marked "Confidential Business Information" at the top. All submissions requesting

confidential treatment must conform with the requirements of section 201.6 of the Commission's rules of practice and procedure (19 CFR 201.6). All written submissions, except for confidential business information, will be made available for inspection by interested persons. To be insured of consideration by the Commission, written statements should be submitted at the earliest practicable date, but no later than April 6, 1981 (extended from the original deadline of Feb. 27, 1981). All submissions should be addressed to the Secretary at the Commission's office in Washington, D.C.

By order of the Commission.

Issued: February 11, 1981.

KENNETH R. MASON,
Secretary.

Index

U.S. Customs Service

	T.D. No.
Treasury decisions:	
Carriers bonds	81–33
Foreign currencies:	
Rates which varied from quarterly rate; February 2–6, 1981	81–34
Daily certified rates; February 2–6, 1981	81–35
	Appeal No.
U.S. Court of Customs and Patent Appeals: *Canadian Tarpoly Co. v. U.S. International Trade Commission*	81–5

DEPARTMENT OF THE TREASURY
U.S. CUSTOMS SERVICE
WASHINGTON, D.C. 20229

OFFICIAL BUSINESS
PENALTY FOR PRIVATE USE, $300

POSTAGE AND FEES PAID
DEPARTMENT OF THE TREASURY (CUSTOMS)
(TREAS. 552)

15/10

Customs Bulletin

Regulations, Rulings, Decisions, and Notices concerning Customs and related matters

and Decisions

of the United States Court of Customs and Patent Appeals and the United States Court of International Trade

NEWARK PUBL'C LIBRARY

MAR 2 7 1981

U. S. GOVT. PUBS.
DEPOSITORY 376

Vol. 15 MARCH 11, 1981 No. 10

This issue contains

T.D. 81–36 through 81–39
C.S.D. 81–52 through 81–75
C.A.D. 1257
Reap. Abstracts R81/51 through R81/59
Erratum
International Trade Commission Notices

THE DEPARTMENT OF THE TREASURY
U.S. Customs Service

T1.11/3:

NOTICE

The abstracts, rulings, and notices which are issued weekly by the U.S. Customs Service are subject to correction for typographical or other printing errors. Users may notify the U.S. Customs Service, Logistics Management Division, Washington, D.C. 20229, of any such errors in order that corrections may be made before the bound volumes are published.

For sale by the Superintendent of Documents, U.S. Government Printing Office, Washington, D.C. 20402. Price: $2.25 (single copy domestic); $2.85 (single copy foreign). Subscription price: $85.00 a year domestic; $106.25 a year foreign.

U.S. Customs Service

Treasury Decisions

(T.D. 81-36)

Customs Approved Public Gauger

Approval of public gauger performing gauging under standards and procedures required by Customs

Notice is hereby given pursuant to the provisions of section 151.43 of the Customs Regulations (19 CFR 151.43) that the application of Marintch, 9001 Glacier, No. 178, Texas City, Tex. 77590, to gauge imported petroleum and petroleum products in all Customs districts in accordance with the provisions of section 151.43 of the Customs Regulations is approved.

Dated: February 19, 1981.

A. PIAZZA,
Acting Director,
Entry Procedures and Penalties Division.

[Published In The Federal Register, February 25, 1981 (46 FR 14106)]

(T.D. 81-37)

Synopses of Drawback Decisions

The following are synopses of drawback rates issued July 17, 1980, to January 14, 1981, inclusive, pursuant to sections 22.1 through 22.5, inclusive, Customs Regulations.

In the synopses below are listed for each drawback rate approved under 19 U.S.C. 1313(a), the name of the company, the specified articles on which drawback is authorized, the merchandise which will be used to manufacture or produce these articles, the factories where the work will be accomplished, the date the statement was signed, the

basis for determining payment, the Regional Commissioner who issued the rate, and the date on which it was signed.

(DRA-1-09)

Dated: February 20, 1981.

GEORGE C. STEUART
(For Marilyn G. Morrison, Director,
Carriers, Drawback and Bonds Division).

(A) Company: AEG Power Tool Corp.
Articles: Hand-operated electric jig saws, hammer drills, drills, and screwdrivers.
Merchandise: Imported components for hand-operated electric power tools such as commutators, carbon brushes, switches, motor housings, cords, screws, washers, bearings, and various other parts.
Factory: Norwich, Conn.
Statement signed: April 30, 1980.
Basis of claim: Used in.
Rate issued by Regional Commissioner of Customs: New York, December 11, 1980.

(B) Company: Aquatech, Inc.
Articles: Sewer cleaning equipment, truck mounted and trailer mounted.
Merchandise: Imported vacuum pumps, booms, oil pumps, tank heads, tanks, and various other component parts and assemblies.
Factory: Cleveland, Ohio.
Statement signed: October 8, 1980.
Basis of claim: Appearing in.
Rate issued by Regional Commissioner of Customs: Chicago, January 30, 1981.

(C) Company: Beacon Textile Printers, Ltd.
Articles: Bleached, dyed and/or printed piece goods.
Merchandise: Imported piece goods.
Factory: Beacon, N.Y.
Statement signed: October 10, 1980.
Basis of claim: Used in, less valuable waste.
Rate issued by Regional Commissioner of Customs: New York, January 6, 1981.

(D) Company: Cal-Facet, Inc.
Articles: Bicycles.

Merchandise: Imported bicycle parts.
Factory: Chatsworth, Calif.
Statement signed: August 7, 1980.
Basis of claim: Appearing in.
Rate issued by Regional Commissioner of Customs: Los Angeles, November 25, 1980.

(E) Company: Champion International Corp.
Articles: Condiment packaging.
Merchandise: Imported cellulose film.
Factory: Minneapolis, Minn.
Statement signed: August 19, 1980.
Basis of claim: Used in.
Rate issued by Regional Commissioner of Customs: New York, November 20, 1980.

(F) Company: Drexel Chemical Co.
Articles: Ethyl parathion 100 percent w/v agricultural insecticide.
Merchandise: Imported ethyl parathion technical 98 percent.
Factory: Tunica, Miss.
Statement signed: December 12, 1980.
Basis of claim: Used in.
Rate issued by Regional Commissioner of Customs: New Orleans, December 30, 1980.

(G) Company: Dynamics Corp. of America, Fermont Division.
Articles: Diesel engine generator sets.
Merchandise: Imported Cummins diesel engines.
Factory: Bridgeport, Conn.
Statement signed: November 21, 1980.
Basis of claim: Appearing in.
Rate issued by Regional Commissioner of Customs: Boston, December 9, 1980.

(H) Company: Envirotech Corp.
Articles: Nonmilitary type automotive mining machinery.
Merchandise: Imported air-cooled diesel engines, off-road tires, axles, air starters, electric retarders, and tire chains.
Factories: Monroe, N.C.; Martin, Ky.; Salt Lake City, Utah; Rock, Mich.
Statement signed: November 21, 1980.
Basis of claim: Appearing in.
Rate issued by Regional Commissioner of Customs: San Francisco, December 22, 1980.

Revokes: T.D. 68–23–H as amended by 68–101–H, 70–66–V, 75–56–L, and 78–159–I.

(I) Company: Harris Corp.
Articles: Finished semiconductor devices.
Merchandise: Imported unfinished semiconductor assemblies.
Factory: Palm Bay, Fla.
Statement signed: October 20, 1980.
Basis of claim: Appearing in.
Rate issued by Regional Commissioner of Customs: San Francisco, December 2, 1980.

(J) Company: Hemisphere Oil Co., Inc.
Articles: Marine lubricating oils.
Merchandise: Imported marine lubricating oil concentrates.
Factory: Yabucoa, P.R.
Statement signed: July 29, 1980.
Basis of claim: Appearing in.
Rate issued by Regional Commissioner of Customs: Miami, December 24, 1980.

(K) Company: Hewlett-Packard Co.
Articles: Functional printed circuit boards and other electronic assemblies.
Merchandise: Imported nonfunctional printed circuit boards and other electronic assemblies.
Factory: Cupertino, Calif.
Statement signed: November 10, 1980.
Basis of claim: Appearing in.
Rate issued by Regional Commissioner of Customs: San Francisco, January 14, 1981.
Revokes: T.D. 80–296–L to cover change in name from Hewlett-Packard Corp.

(L) Company: Ingersoll-Rand Co.
Articles: Air compressors.
Merchandise: Imported air receiver tanks.
Factory: Davidson, N.C.
Statement signed: November 12, 1980.
Basis of claim: Appearing in.
Rate issued by Regional Commissioner of Customs: New York, January 13, 1981.

(M) Company: J. M. S. Jewelry Manufacturing Co., Inc.
Articles: 14-karat gold limited edition collectors ingots.

Merchandise: Imported 14-karat gold chains and bracelets.
Factory: Bloomfield, N.J.
Statement signed: October 2, 1980.
Basis of claim: Appearing in.
Rate issued by Regional Commissioner of Customs: New York, November 18, 1980.

(N) Company: Majestic Weaving Co., Inc.
Articles: Napped piece goods.
Merchandise: Imported piece goods.
Factory: Cornwall, N.Y.
Statement signed: October 28, 1980.
Basis of claim: Used in, less valuable waste.
Rate issued by Regional Commissioner of Customs: New York, January 6, 1981.

(O) Company: Metro-Goldwyn-Mayer Film Co.
Articles: Films, motion picture.
Merchandise: Imported raw stock film.
Factory: Culver City, Calif.
Statement signed: November 11, 1980.
Basis of claim: Used in.
Rate issued by Regional Commissioner of Customs: New York, January 13, 1981.
Revokes: T.D. 40894–D as amended by 49620–C to cover change in name from Loew's Inc.

(P) Company: N. C. Agency (U.S.A.), Inc.
Articles: Bedspreads, pillows, pillowcases, and wall plaques.
Merchandise: Imported rayon velvet and cotton fabrics and patchwork bedspread shells.
Factory: Antioch, Calif.
Statement signed: October 16, 1980.
Basis of claim: Used in.
Rate issued by Regional Commissioner of Customs: San Francisco, November 24, 1980.

(Q) Company: Northwestern Motor Co.
Articles: Skid steer loaders.
Merchandise: Imported diesel engines.
Factory: Eau Claire, Wis.
Statement signed: July 1, 1980.
Basis of claim: Used in.

Rate issued by Regional Commissioner of Customs: Chicago, November 17, 1980.

(R) Company: P & C Manufacturing Co., Inc.
Articles: Heat transfer paper.
Merchandise: Imported clay-coated paper printing ink.
Factory: Colonial Heights, Va.
Statement signed: June 17, 1980.
Basis of claim: Used in.
Rate issued by Regional Commissioner of Customs: Baltimore, July 17, 1980.

(S) Company: Pioneer Finishing Corp.
Articles: 100 percent cotton laundry bag.
Merchandise: Imported 100 percent cotton sheeting.
Factory: Fall River, Mass.
Statement signed: June 25, 1980.
Basis of claim: Used in, less valuable waste.
Rate issued by Regional Commissioner of Customs: New York, January 6, 1981.

(T) Company: Reliance Universal, Inc.
Articles: Lacquer.
Merchandise: Imported nitrocellulose.
Factory: Brea, Calif.
Statement signed: April 3, 1980.
Basis of claim: Used in.
Rate issued by Regional Commissioner of Customs: Los Angeles, December 2, 1980.

(U) Company: Riley-Beaird, a division of United States Riley Corp.
Articles: Boiler tube elements, boiler tube panels, boiler tubes.
Merchandise: Imported seamless carbon steel boiler tubes.
Factory: Shreveport, La.
Statement signed: October 3, 1980.
Basis of claim: Appearing in.
Rate issued by Regional Commissioner of Customs: New York, December 11, 1980.
Revokes: T.D. 79–268–R to cover change in name from Riley Beaird Inc.

(V) Company: Simpson Extruded Plastics Co.
Articles: PVC pipe.
Merchandise: Imported PVC resin.

Factory: Eugene, Oreg.
Statement signed: November 4, 1980.
Basis of claim: Used in.
Rate issued by Regional Commissioner of Customs: San Francisco, November 26, 1980.

(W) Company: The Storey Corporation of Virginia.
Articles: Heat transfer paper.
Merchandise: Imported dyestuffs.
Factory: Harrisonburg, Va.
Statement signed: December 17, 1980.
Basis of claim: Used in.
Rate issued by Regional Commissioner of Customs: Baltimore, January 6, 1981.

(X) Company: Terumo America, Inc.
Articles: Thermometers.
Merchandise: Imported stem glass.
Factory: Compton, Calif.
Statement signed: December 1, 1980.
Basis of claim: Used in.
Rate issued by Regional Commissioner of Customs: San Francisco, January 8, 1981.

(Y) Company: Towmotor Corp.
Articles: Forklift trucks.
Merchandise: Imported diesel and gas engines.
Factories: Mentor, Ohio; Dalles, Oreg.
Statement signed: October 5, 1980.
Basis of claim: Used in.
Rate issued by Regional Commissioner of Customs: Chicago, November 20, 1980.
Revokes: T.D. 54474–J.

(Z) Company: Wakmann Watch Co., Inc.
Articles: Dialed movements, finished watches, with or without bands or bracelets.
Merchandise: Imported watch heads, watch movements, modules, watchcases, watch dials, bracelets, straps, and watchbands.
Factory: New York, N.Y.
Statement signed: November 3, 1980.
Basis of claim: Used in.
Rate issued by Regional Commissioner of Customs: New York, January 6, 1981.

338-577 O - 81 - 2

(T.D. 81-38)

Foreign Currencies—Daily Rates for Countries Not on Quarterly List

Rates of exchange based on rates certified to the Secretary of the Treasury by the Federal Reserve Bank of New York for the Brazil cruzeiro, People's Republic of China yuan, Hong Kong dollar, Iran rial, Philippines peso, Singapore dollar, Thailand baht (tical), and Venezuela bolivar

The Federal Reserve Bank of New York, pursuant to section 522(c), Tariff Act of 1930, as amended (31 U.S.C. 372 (c)), has certified buying rates for the dates and foreign currencies shown below. The rates of exchange, based on these buying rates, are published for the information and use of Customs officers and others concerned pursuant to part 159, subpart C, Customs Regulations (19 CFR 159, subpart C).

Brazil cruzeiro:	
February 9–10, 1981	$0. 0144
February 11–13, 1981	. 0141
People's Republic of China yuan:	
February 9–11, 1981	$0. 622704
February 12, 1981	Bank holiday
February 13, 1981	. 614062
Hong Kong dollar:	
February 9, 1981	$0. 188857
February 10, 1981	. 188964
February 11, 1981	. 188982
February 12, 1981	Bank holiday
February 13, 1981	. 186741
Iran rial:	
February 9–13, 1981	Not available
Philippines peso:	
February 9–11, 1981	$0. 1315
February 12, 1981	Bank holiday
February 13, 1981	. 1305
Singapore dollar:	
February 9, 1981	$0. 482160
February 10, 1981	. 480538
February 11, 1981	. 481580
February 12, 1981	Bank holiday
February 13, 1981	. 477327

Thailand baht (tical):
February 9–13, 1981 ..... $0. 0484
Venezuela bolivar:
February 9–13, 1981 ..... $0. 2329

(LIQ–3–01 O:C:E)

Dated: February 13, 1981

GWENN KLEIN KIRSCHNER,
Acting Chief,
Customs Information Exchange.

(T.D. 81–39)

Foreign Currencies—Variances From Quarterly Rate

The following rates of exchange are based upon rates certified to the Secretary of the Treasury by the Federal Reserve Bank of New York, pursuant to section 522(c), Tariff Act of 1930, as amended (31 U.S.C. 372(c)), and reflect variances of 5 per centum or more from the quarterly rate published in T.D. 81–13 for the following countries. Therefore, as to entries covering merchandise exported on the dates listed, whenever it is necessary for Customs purposes to convert such currency into currency of the United States, conversion shall be at the following rates.

Austria schilling:
February 9, 1981 ..... $0. 065920
February 10, 1981 065746
February 11, 1981 065595
February 12, 1981 ..... Bank holiday
February 13, 1981 063776
Belgium franc:
February 9, 1981 ..... $0. 029138
February 10, 1981 028994
February 11, 1981 028960
February 12, 1981 ..... Bank holiday
February 13, 1981 028074
Denmark krone:
February 9, 1981 ..... $0. 152381
February 10, 1981 151423
February 11, 1981 151343
February 12, 1981 ..... Bank holiday
February 13, 1981 147384
Finland markka:
February 13, 1981 ..... $0. 243013

France franc:	
February 9, 1981	$0.203231
February 10, 1981	.202224
February 11, 1981	.201816
February 12, 1981	Bank holiday
February 13, 1981	.195791
Germany deutsche mark:	
February 9, 1981	$0.467727
February 10, 1981	.465549
February 11, 1981	.465224
February 12, 1981	Bank holiday
February 13, 1981	.450450
Ireland pound:	
February 9, 1981	$1.7455
February 10, 1981	1.7335
February 11, 1981	1.7315
February 12, 1981	Bank holiday
February 13, 1981	1.6850
Italy lira:	
February 9, 1981	$0.000987
February 10. 1981	.000983
February 11, 1981	.000984
February 12, 1981	Bank holiday
February 13, 1981	.000956
Netherlands guilder:	
February 9, 1981	$0.431313
February 10, 1981	.429277
February 11, 1981	.429092
February 12, 1981	Bank holiday
February 13, 1981	.415628
Norway krone:	
February 13, 1981	$0.181159
Portugal escudo:	
February 13, 1981	$0.017513
Spain peseta:	
February 9, 1981	$0.011875
February 10, 1981	.011730
February 11, 1981	.011703
February 12, 1981	Bank holiday
February 13, 1981	.011436
Sri-Lanka rupee:	
February 9–13, 1981	$0.055991
Sweden krone:	
February 13, 1981	$0.214018

Switzerland franc:	
February 9, 1981	$0.515198
February 10, 1981	.513215
February 11, 1981	.512295
February 12, 1981	Bank holiday
February 13, 1981	.49566

(LIQ–03–01 O:C:E)

Dated: February 13, 1981.

GWENN KLEIN KIRSCHNER,
Acting Chief,
Customs Information Exchange.

U.S. Customs Service

Customs Service Decisions

DEPARTMENT OF THE TREASURY,
OFFICE OF THE COMMISSIONER OF CUSTOMS,
Washington, D.C.

The following are decisions made by the U.S. Customs Service where the issues involved are of sufficient interest or importance to warrant publication in the CUSTOMS BULLETIN.

Dated: February 25, 1981.

DONALD W. LEWIS,
Director,
Office of Regulations and Rulings.

(C.S.D. 81-52)

Classification: Applicability of Item 807.00, TSUS, to Component Articles of U.S. Origin in Which Holes Are Punched in a Foreign Plant

Date: March 28, 1980
File: CLA-2:RRUCSC
061429 AI

This concerns your request for consideration of Internal Advice No. 45/79, regarding the applicability of item 807.00, Tariff Schedules of the United States (TSUS), to component articles in which holes are drilled or punched in a foreign assembly plant.

Issue.—The issue presented is whether drilling, cutting, or punching holes in parts of a three-channel cable television converter, which are described as a plastic cabinet, plastic wood-grained decal, and an oscillator shield, constitutes a fabricating or nonassembly step, or merely an operation considered incidental to assembly under item 807.00, TSUS.

Facts.—The three-channel cable television converter is assembled in Mexico from component parts exported from the United States,

the following operations are performed on the described parts in Mexico:

(1) A 0.50-inch hole is drilled through the plastic cabinet in a drill press to accommodate the assembly of a lock.

(2) A hole 0.562 inch in diameter is cut through the plastic wood-grained decal in an air press to accommodate the assembly of a lock.

(3) A hole 0.218-inch in diameter is punched through the oscillator shield to accommodate the subsequent insertion of a coil.

In describing the hole-making operations, it is stated that all three parts are similarly placed in a locating nest in a fixed position with respect to the punch or drill so as to locate the point in the component where the hole is to be made. The drill or punch is then hand tripped by the operator to make the hole and the part is removed and placed aside, awaiting use in the assembly. The costs for the hole-making operations range from 1.8 percent to 11 percent of the total cost of the plastic cabinet and oscillator shield, respectively.

Contention.—It is claimed by the importer that the described hole-drilling operations are incidental to the subsequent assembly of the device and in support thereof, the case of *Rudolph Miles* v. *United States*, C.A.D. 1202, is cited as precedent for the hole-punching operations described herein.

Law and analysis.—In the cited *Miles* case, it was held that burning slots and holes in steel beams prior to their joining to boxcars, so that wear and support plates, and other components, could be initially attached, does not preclude the application of item 807.00, TSUS, by virtue of the artificial dual assembly distinction posited therein. The beams were first alined in jigs, the centers located, slots burned in the ends, and the final holes were burned along the short flange of each beam in order to install the wear and support plates. The holes were positioned with a gage so that the plates would be alined equidistant from the centers of the floating center sills. In this respect, the court held that the processing of the beams in Mexico, especially the burning of the slots and holes, was concomitant with the assembly of center sills and not substantial enough to preclude the application of item 807.00, TSUS. It also held that the operation did not result in a substantial alteration to the part so as to preclude compliance with clause (a) of item 807.00, TSUS.

In accordance with the views expressed in the *Rudolph Miles* case, our position is to consider operations such as hole punching performed abroad as a step in the assembly and incidental thereto, provided that the hole-drilling operations are not substantial and are merely incidental to the overall assembly process. In the instant case, the drilling of the holes is a necessary preliminary step to completion

of the assembly and it would not be feasible to perform these operations except in conjunction with the assembly process.

Conclusion.—In view of the foregoing, it is our opinion that the foreign hole-punching operations are not substantial and are merely incidental and in connection with the assembly. Accordingly, the application of item 807.00, TSUS, to the exported components in which holes are made abroad, should not be precluded.

(C.S.D. 81-53)

Classification: Schematics and Drawings To Accompany Metalized Mylar Computer Tapes

Date: May 15, 1980
File: CLA-2:R:CV:MSP
061062 LLB

This letter is in the nature of a clarification of our March 12, 1979 response to your internal advice request of December 8, 1978 (IA 191/78), concerning certain metalized mylar computer tapes.

While our response appar ntly resolved your question with regard to the tapes themselves, you now inquire regarding the dutiable status of certain schematics and drawings accompanying the tapes upon importation.

Our decision to classify the tapes involved under item 724.40, Tariff Schedules of the United States (TSUS), rather than under item 870.10, TSUS, was grounded in large part upon the fact that the tapes were destined to be used to produce a photographic plate. Because of the mechanical process involved, and because no inference could be drawn nor conclusion made from the information contained in the tapes, we determined that the tapes could not qualify as data within the meaning of item 870.10, TSUS.

It is our understanding that some interpretive materials are contained within the drawings and schematics furnished along with the tapes. To the extent that this is the case, and to the extent that inferences and conclusions may emerge from that interpretation process, we believe that they satisfy the criteria for data, and may properly be classified under item 870.10, TSUS, if the other requisites of the statute and the pertinent regulations are satisfied.

(C.S.D. 81-54)

Classification: Ceramic Statues

Date: May 19, 1980
File: CLA-2:RRUCSC
061949 TL

GEORGE K. BROKAW,
District Director of Customs
San Francisco, Calif.

DEAR SIR: This ruling responds to your November 29, 1979, request concerning the proper classification of certain ceramic statues, Internal Advice 12/80.

Issue.—Does the meaning of the term "professional" as it is used in items 534.11 and 513.51, Tariff Schedules of the United States (TSUS), differ from the meaning of "professional" as it is used in item 765.15, TSUS.

Facts.—Apparently, ceramic sculptures are being imported which do not qualify for duty-free entry under either item 765.15, TSUS, or item 765.25, TSUS. Classification of these sculptures under either item 513.51, TSUS, or item 534.11, TSUS, is sought by the importer.

Law and analysis.—Item 765.15, TSUS, is a provision for:

> Original sculptures and statuary, all the foregoing made in any form from any material as the professional productions of sculptors only, * * *.

Item 765.25, TSUS, is a provision for:

> Original works of the free fine arts not provided for in the foregoing provisions of this part, in any media including, but not limited to, applied paper and other materials, manufactured or otherwise, such as are used on collages * * *.

Item 513.51, TSUS, is a provision for:

> Stone statuary and sculptures not specially provided for, the professional productions of sculptors only * * *.

and Item 534.11, TSUS, is a provision for:

> Statues, statuettes, and hand-made flowers, all the foregoing not specially provided for, of ceramic ware, valued over $2.50 each and produced by professional sculptors or directly from molds made from original models produced by professional sculptors * * *.

Item 765.25, TSUS, does not contain the phrase "* * * professional productions of sculptors only * * * " which is found in both item 513.51 and 765.15, TSUS or the language found in item 534.11, TSUS "* * * produced by professional sculptors * * *."

It may be noted that item 534.11 TSUS contains the phrase "* * * produced by professional sculptors * * *." Substantially the same language is contained in items 513.51, and 765.15, TSUS.

338-577 O - 81 - 3

It may be noted that each of these two phrases establishes substantially the same requirement, that the work of art be done by a professional. Both the legislative history of these provisions and the predecessors to these provisions do not cast any doubt on this requirement or offer any support tor the view that the interpretation of this language should vary from one provision to another. For this reason, we believe that the phrases each requires the person who produces the sculpture to be a professional.

In CIE 160/56 it was stated that for a person to be considered to be a professional he must either (1) "* * * be a graduate of a course in sculpture at a recognized school of art (free fine art not industrial art), or * * *" (2) he must "* * * be recognized in art circles as a professional sculptor by the acceptance of his works in public exhibitions limited to the free fine arts."

This interpretation of the term "professional" has been given effect in our rulings and we are of the opinion that it should continue to be applied whether the articles are classified under schedule 5 or schedule 7.

In view of the foregoing, we are in agreement with your conclusion that the biographical sketch on ---------- is not sufficient to qualify him as a professional sculptor. It does not indicate that he graduated from a recognized school of the free fine arts or that his works have been accepted in public exhibitions limited to the free fine arts.

(C.S.D. 81–55)

Classification: Applicability of Item 801.00, TSUS, to Molds for Toys Imported, Exported, then Reimported into the United States

Date: June 16, 1980
File: CLA–2:RRUCSC
061782 LLB

This ruling concerns your October 3, 1979, request for internal advice on the tariff status of certain molds for the manufacture of toys, which are entered duty paid, exported to Canada for a specified period, and reimported from Canada (I.A. No. 234/79).

Issue.—Whether the entire transaction, the details of which will follow, qualifies the reimportation of the subject molds for duty-free tariff treatment under item 801.00, Tariff Schedules of the United States (TSUS).

Facts.—Molds for the manufacture of toys were imported from Portugal by an American company (company A). Company A paid duty on the items. Thereafter, company A entered into an agreement

with a Canadian toy manufacturer (company B), whereby company B was granted the exclusive Canadian use of the molds for the purpose of manufacturing and selling the company A line of toys in Canada. Consideration supporting the agreement was to be in the form of royalties on the toys sold in Canada, to be paid to company A by company B. The agreement was specifically stated to run from September 1, 1977, until August 31, 1979.

Beginning in January 1979, the molds were reimported into the United States by company C, a company related to company B in Canada. Duty has been assessed on these importations, and counsel for company C have claimed the items should have been accorded treatment under item 801.00, TSUS, because the molds were in fact reimported on behalf of company A.

Law and analysis.—Item 801.00, TSUS, provides:

> Articles, previously imported, with respect to which the duty was paid upon such previous importation, if: (1) Reimported without having been advanced in value or improved in condition by any process of manufacture or other means while abroad, after having been exported under lease to a foreign manufacturer, and (2) reimported by or for the account of the person who imported it into, and exported it from, the United States..... Free

The controversy in this case over the applicability of item 801.00, TSUS, has been framed by importer's counsel as being limited entirely to the issue of whether a valid lease existed between companies A and B, as required by the first clause of item 801.00, TSUS. Disagreement has arisen regarding whether the agreement between A and B was a valid lease, or merely a license for exclusive Canadian rights to the molds with an accompanying loan of the molds.

A question regarding whether a transaction was a lease or a licensing agreement was the subject of a previous Headquarters ruling (I.A. 9/76). In that case it was clearly stated that the merchandise at issue had been loaned by a domestic concern to a Canadian company. Under those circumstances it would have been difficult to support a finding that the merchandise had been exported under lease.

In the present case, it is evident that the parties intended the transaction to be a lease, the same being specifically stated in a letter dated September 7, 1977. That the tenor of the agreement is couched in terms of the "exclusive right to use" the molds, suggesting a license to use, and further, that consideration is stated in terms of "royalties" rather than a fixed sum are inconsequential facts when viewing the transaction as a whole.

The second clause of item 801.00, TSUS, must also be satisfied by parties seeking the benefits of its use. Though not immediately appar-

ent in the original record, information subsequently supplied to this office by company A does indicate that the importation by company C was accomplished for the account of company A. In light of this information, we find that the requirements of the second clause of item 801.00, TSUS, have been satisfied.

Conclusion.—In light of the foregoing, we find that the provisions of item 801.00, TSUS, are available to the importer in this case.

(C.S.D. 81–56)

Reliquidation: Failure of Broker To Amend Immediate Delivery Permit; Clerical Error; 19 U.S.C. 1520(c)(1)

Date: June 27, 1980
File: LIQ–8–01 RRUEE
713146 BM

This ruling reviews a protest against a district director's refusal to reliquidate an entry pursuant to section 520(c)(1), Tariff Act of 1930, as amended.

Issue.—Was the failure of the broker to amend the immediate delivery permit to indicate the releasing document was the entry, rather than an immediate delivery permit, a clerical error within the meaning of section 520(c)(1) of the Tariff Act of 1930, as amended?

Facts.—Cap screws of Polish origin arrived at Detroit from Canada by a truck shipment and were released under the immediate delivery procedure on December 29, 1978. The entry summary and duty payment were made to Customs on January 8, 1979. The broker attempted to enter the cap screws under item 646.63 of the Tariff Schedules (TSUS), at the duty rate of 9.5 percent ad valorem. However, Customs required the cap screws to be entered under item 923.52, TSUS, at the duty rate of 15 percent ad valorem. This was because a Presidential proclamation required that for entries filed on or after January 6, 1979, cap screws were to be classified under item 923.53, TSUS.

The broker contends that the entries involved should be reliquidated under item 646.63, TSUS and thus at the lower classification rate because:

(1) The Presidential proclamation took effect on January 6, 1979, which was a Saturday, a day on which the customhouse was not open and therefore the first date when an entry summary could have been filed was on Monday, January 8, 1979.

(2) Customs should have reliquidated the entry pursuant to section 520(c)(1) of the Tariff Act because due to a clerical error the broker failed to note "entry" on the releasing document and, therefore,

Customs should have treated the immediate delivery release on December 29, 1978, as an "entry."

Law and analysis.—Section 520(c)(1), Tariff Act of 1930, as amended (19 U.S.C. 1520(c)(1)), in pertinent part, provides that the District Director may reliquidate an entry to correct a clerical error, mistake of fact, or other inadvertence not amounting to an error in the construction of law.

Section 101 of Public Law 95–410 amended section 315(a) of the Tariff Act of 1930, as amended (19 U.S.C. 1315(a)), by adding a third exception to the general rule set forth in that section. This third exception provided, in effect, that for merchandise released under the new expedited entry procedure the effective rate of duty is the duty in effect when the merchandise is released under the entry document (the document setting forth sufficient information to release the merchandise). The general rule set forth in section 315(a) of the Tariff Act provides that the effective rate of duty is the rate of duty in effect when the entry for consumption and deposit of duties are filed with Customs. This general rule applies to merchandise released under the immediate delivery procedure authorized by section 448(b) of the Tariff Act of 1930, as amended (19 U.S.C. 1448(b)). Sections 141.68 and 141.69 of the Customs Regulations (T.D. 79–221) set forth in detail in the Customs Regulations this matter.

Because Public Law 95–410 set forth a new expedited entry procedure, the immediate delivery procedure (the expedited entry procedure in use prior to the new law, but not revoked by the new law) was limited by Customs as to its use. Such limitations are set forth in section 142.21 of the Customs Regulations (T.D. 79–221). Because the vast majority of merchandise from contiguous countries arriving at border ports by land shipments are released under term immediate delivery permits and Public Law 95–410 authorizing the new entry procedure did not provide for term entries, it was decided in the interest of the importing community to retain the immediate delivery procedure for merchandise arriving at Customs ports of entry by land shipments from contiguous countries. (See sec. 142.21(a) of the Customs Regulations set forth in T.D. 79–221.) This, however, did not preclude such merchandise from being released under the new expedited entry procedure. In order for such merchandise to be released under the new expedited entry procedure, the releasing document (Customs form 3461 or Customs form 7533) must be, in accordance with section 142.3 of the Customs Regulations (T.D. 79–221), "appropriately modified" by indicating that the releasing document was the entry. Furthermore, instructions on this matter were issued by Customs to its field offices which disseminated this information to the importing public.

Since merchandise arriving from contiguous countries by land shipments are generally released under the immediate delivery procedure and since in order to release such merchandise under the new expedited entry procedure it is essential that the releasing document be modified to indicate it is the entry, it must be presumed that, without the submission of documentary evidence to the contrary, the importer or his agent (the broker) intended at the time of release for the merchandise to be released under the immediate delivery procedure. Evidently, the broker at the time of release was either unaware of the Presidential proclamation or did not fully appreciate the legal ramifications resulting from obtaining the release of such merchandise under the immediate delivery procedure, rather than the new expedited entry procedure. Therefore, we believe that any error involved in this case was a mistake of law, rather than a clerical error, or mistake of fact within the meaning of section 520(c)(1) of the Tariff Act.

If, on the other hand, the broker had submitted to Customs documentation such as correspondence between himself and his client dated prior to the release of the merchandise or notations in his papers prior to the release of such merchandise that the merchandise was to be released under the new expedited entry procedure, we believe that the above presumption would have been rebutted and the entry could have been reliquidated in accordance with section 520(c)(1) of the Tariff Act.

We do not appreciate the significance of the broker's contention regarding the fact that the Presidential proclamation took effect on January 6, 1979, which was a Saturday, a day on which the customhouse was closed, and therefore, he was unable to file the entry summary for the merchandise until Monday, January 8, 1979. Even if customhouse were open on Saturday, Janaury 6, 1979, and the broker was able to file his entry summary on that date, the merchandise would still have been classified under item 923.53, TSUS, and at the higher rate of duty because the first day the Presidential proclamation took effect was January 6, 1979, and applied to merchandise entered on that date. Likewise, although importers could obtain release of their merchandise on January 6, 1979, under the expedited entry procedure, the cap screws so released on that date were dutiable at the higher rate of duty, in accordance with the Presidential proclamation.

Holding.—The failure of the broker to note on the releasing document that it was to serve as the entry is not a clerical error, mistake of fact, or other inadvertence not amounting to a construction of law within the meaning of section 520(c)(1) of the Tariff Act, unless the broker can establish by documentary evidence to Customs satis-

faction that it was his intent at the time of release for the releasing document to serve as the entry. The protest is therefore denied in full.

(C.S.D. 81–57)

General Order Warehouses: Notification of Parties Prior to Sale of General Order Merchandise; Order of Preference

Date: August 9, 1980
File: INS–3–05 RRUEE
713292 M

This ruling concerns an interpretation of section 127.24 of the Customs Regulations which sets forth the list of the parties to be notified regarding the sale of general order merchandise.

Issue.—Is the listing of those parties to be notified prior to the sale of general order merchandise a mandatory order of preference or merely a permissive order of preference?

Law and Analysis.—Section 127.24 of the Customs Regulations provides:

> Notice of sale shall be sent on Customs Form 5251, 30 days prior to the date of sale, or 30 days prior to the transfer of merchandise to the place of sale, to the following:
>
> (a) Importer, if known; or
> (b) Consignee, if name and address can be ascertained, or
> (c) Shipper, his representative or agent, if merchandise is consigned to order or consignee cannot be ascertained; or
> (d) Warehouse transferee; or
> (e) Lienholder.

T.D. 74–114 revised the Customs Regulations on general order Merchandise and changed the part number in the Customs Regulations from 20 to 127. The predecessor to section 127.24, which was section 20.5(j), read as follows:

> When the name and address of the consignee can be ascertained, notice of the date of sale shall be mailed to him. When unclaimed merchandise was consigned to order or for other reason the name of a consignee cannot be obtained, the collector, where practicable, shall notify the shipper or his representative or the agent of the carrier of the date when and place where the goods are to be sold.

We believe that it was very clear from the language in section 20.5(j) of the Customs Regulations that the order of the parties to be notified was a mandatory order of listing. The consignee was basically the party to be notified. Only if the merchandise was consigned to order or for any other reason the consignee was not known was the shipper to be notified.

Section 127.24 of the Customs Regulations expanded upon the list set forth in section 20.5(j) in an attempt to cover all possible circumstances. The intent of section 127.24 and its predecessor, section 20.5(j), is for Customs to notify the person who for Customs purposes has the primary interest in the merchandise. This interest is reflected by the person who is primarily liable for the payment of duties for such merchandise. Except for the case of merchandise transferred to a Customs bonded warehouse, the list in section 127.24 sets forth in descending order those parties having a primary interest in the merchandise. Therefore, in those instances the order of preferences should be treated as being mandatory. However, in the case of merchandise transferred in a Customs bonded warehouse in accordance with subpart D of part 144, the warehouse transferee replaces the importer of record as the party primarily responsible for the payment of duty and should be the party notified of the sale.

Holding.—The person primarily responsible for the merchandise for Customs purposes, as indicated by the person primarily responsible for the payment of duty, should be notified of the pending sale of general order merchandise. Except in the case of merchandise transferred in a Customs bonded warehouse, the list in section 127.24 sets forth in descending order those parties having a primary interest in the merchandise, and therefore, the order of preferences in such cases is mandatory. However, in the case of merchandise transferred in a Customs bonded warehouse, the warehouse transferee is the person primarily responsible for the merchandise for Customs purposes and should be the party notified of the pending sale.

(C.S.D. 81–58)

Classification: Figures Representing Beings From Other Planets

Date: August 11, 1980
File: CLA–2: RRUCGC
062708 MH

This ruling concerns the classification of three toy figures, products of Hong Kong.

Facts.—The submitted samples are toy figures which represent beings from other planets. Exhibit 1, "Repto," is a 4½-inch tall figure, stated to be one-half man, one-half reptile. Of the four appendages, the arms contain removable weapons. The sample also has attachable wings.

Exhibit 2, "Membros," is a 4-inch tall figure stated to be "a slithery skinned invader." He also is somewhat reptilian in appearance, and

has four appendages, two legs and two arms. The arms contain attachments which represent weapons.

Exhibit 3, "Antron," is a 4-inch tall figure of a six-limbed invader from the faraway galaxy of Thoraxid. It has six appendages, two of which appear to be legs as well as four arms with similar accessories.

Issue.—Whether the instant samples are classifiable as toy figures of animate objects within the meaning of item 737.40, Tariff Schedules of the United States (TSUS).

Law and Analysis.—The language of item 737.40, TSUS, has been the subject of much litigation. In *Lewis Galoob Co.* v. *United States*, 66 Cust. Ct. 484, C.D. 4239 (1971), the court discussed the meaning of the term "animate objects." The court stated that the term "toy figures of animate objects" included only those figures which represented living beings. The court cited with approval the following language formulated in *Louis Marx & Co.* v. *United States*, 40 Cust. Ct. 610 (1958):

> An animate object is one representing animals or people; that is, possessing animal life and that in animate objects (sic) are those which are not endowed with animal life, such as benches, trees, fences, etc.

The merchandise at bar was referred to by the court as a mechanical walking robot. It reasoned thus:

> That the importation does not represent a living being is manifest from even the most casual inspection of the sample. For example, no astronaut or any other living being can swivel 360 degrees at the head and waist, as does the imported figure. And no human or other living being has a chest cavity which shoots guns. Moreover, the position of the head in relation to the chest cavity negates any suggestion that a human body could be inside the figure. Indeed, the only feature in support of the claim that the imported figure is "animate" is the painting of a human face in the head portion of the article. However, it must be added that the head is rotatable 360 degrees and that guns are directly below the face. In such circumstances, the presence of a human face in an article which is otherwise incapable of representing any living being cannot make "animate" what is, in its totality, incapable of animation or life. Put otherwise, the addition of "facial" features to what otherwise represents a robot or inanimate being is not sufficient to transform the present article into a figure of an animate object for the reason that the article does not represent any living being. *Louis Marx & Co., Inc.* v. *United States*, *supra*.

It is clear after the decision in *Lewis Galoob Co.* that robot figures are not animate objects for tariff purposes, for they do not possess animal life, but are mechanically powered. Similarly, representations of plant life are clearly not considered animate objects.

Less clear under the above test is the treatment of figures representing beings from other planets. Such figures do not represent actual

338-577 O - 81 - 4

living beings; rather, they are merely the product of the toy manufacturer's imagination. They often possess features and characteristics which distinguish them from animate life on this planet. Accordingly, the Customs Service concludes that such figures are not animate objects within the meaning of item 737.40, TSUS.

In headquarters ruling letter 055257, dated July 11, 1979, the Customs Service held that four figures from the movie "Star Wars" were figures of animate objects since they were recognizable life forms on other planets.

The above decision concerned merchandise which was unique in character. The "Star Wars" figures were regarded as animate by virtue of their role in a major motion picture which had a strong impact on the popular consciousness. The foregoing decision is regarded as sui generis.

The instant figures are not representations of actual living beings. They are entirely imaginary and contain features which distinguish them from animate life on this planet. They are not figures of animate objects for tariff purposes. Classification in item 737.40, TSUS, is, therefore, precluded.

Holding.—The instant merchandise is classifiable under the provision for toys not specially provided for, in item 737.95, TSUS dutiable at the rate of 16.2 percent ad valorem.

(C.S.D. 81–59)

Carrier Control: Canadian Vessel Conducting Fisheries Research in U.S. Territorial Waters

Date: August 12, 1980
File: VES–7–01
104813 MKT

Reurtel of July 31, 1980 (our case 104813), which requests approval of the use of the Canadian R/V *E.E. Prince* to conduct fisheries research in U.S. territorial waters under the auspices of the Canadian Government, such activities would not be considered employment in the fisheries under 46 U.S.C. 251(a) and would not be prohibited by any law administered by the Customs Service, provided no fish taken by the vessel are landed in the United States. If the vessel comes into a U.S. port, it would be subject to the provisions of section 4.96(e), Customs Regulations (19 CFR 4.96(e)). Activities in the Fishery Conservation Zone are subject to laws administered by the National Ocean and Atmospheric Administration, and any questions about these activities should be directed to that agency.

(C.S.D. 81-60)

In-Bond Merchandise In-Transit Through the United States: Reasonable Availability of Bonded Common Carriers; 19 U.S.C. 1553

Date: August 21, 1980
File: BON-1-RRUCDB B 211779

Issue.—What is the meaning of the phrase "reasonably available" as set out in 19 U.S.C. 1553 and section 18.20(b), Customs Regulations? On whom does the burden rest of showing bonded carriers are not reasonably available as set out in the statute?

Facts.—A field office has asked us to interpret reasonably available when applied to the following circumstances:

1. Use of a bonded carrier (19 U.S.C. 1551) results in prohibitive expense.

2. Slow deliveries: (a) A private party states that the bonded carrier takes 3-4 days longer to transport his merchandise than it would take him; (b) A ship's chandler complains that bonded carriers occasionally miss sailing times of vessels to which he has sold supplies, resulting in profit losses.

3. Available bonded carriers don't have specialized equipment; e.g., car transporters and/or refrigerated transporters.

4. Bonded carriers will not agree to allow a nonbonded carrier to use their bonds under the provisions of section 18.1(a)(1) of the regulations.

Law and analysis.—Section 1553, title 19, United States Code, provides in relevant part:

> * * * In places where no bonded common carrier facilities are reasonably available, such merchandise may be so transported otherwise than by a bonded common carrier under such regulations as the Secretary of the Treasury shall prescribe.

There is a difference between one who is designated a private carrier of bonded merchandise under 19 U.S.C. 1551 and one who is allowed to transport merchandise under bond under 19 U.S.C. 1553 because bonded facilities are not reasonably available.

One who is designated a private carrier under section 1551 operates under a private carriers bond, Customs form 3588, which is a blanket bond and allows that carrier to transport his own merchandise subject to the movement restrictions of section 112.11(a)(4) (i), (ii), (iii) of the regulations. On the other hand, one who is allowed to carry goods (not necessarily his own) because of nonavailability of bonded facilities under section 1553 is issued a one-time transportation and exportation bond on Customs form 7557.

The "regulations as the Secretary of the Treasury shall prescribe," as set out in section 1553, are contained in section 18.20(b) of the Customs Regulations. A bond issued to a carrier pursuant to section 18.20(b) does not result in unqualified individuals and firms operating as bonded carriers without meeting preconditions imposed on other applicants under section 1551, because those allowed to operate under 18.20(b) of the regulations are restricted to a particular bond for one-time use. A carrier allowed to operate under the foregoing regulation cannot be termed "unqualified" if a district director allows such operation. The exemption from meeting the conditions of 19 U.S.C. 1551 is provided by 19 U.S.C. 1553 and 18.20(b) Customs Regulations if bonded transportation is not reasonably available. The lack of appropriate bonded transportation qualifies the nonbonded carrier to become bonded under a Transportation and exportation bond, but does not designate that carrier a bonded carrier, private or otherwise, under 19 U.S.C. 1551.

Legal determination 79–0161 applies only to designation of persons or firms as private bonded carriers of merchandise under 19 U.S.C. 1551, which must meet certain requirements for designation. Designation as a private carrier of bonded merchandise under 19 U.S.C. 1551 is not determined by the availability of freight forwarders, bonded common carriers, or contract carriers, and the reasonably available rule has no bearing whatsoever on that law.

The last sentence of 19 U.S.C. 1553 apparently restricts carriage of bonded merchandise by other than bonded common carriers only when bonded common carriers are not reasonably available. We do not believe this to be the case. When 19 U.S.C. 1551 was first enacted in 1930, that law provided only common carriers could be designated as carriers of bonded merchandise. It follows that the bonded carrier in 19 U.S.C. 1553 meant, in 1930, a bonded common carrier. The last sentence of 19 U.S.C. 1553, referring to bonded common carrier was added by legislative amendment (act of June 25, 1938, 52 Stat. 1087), at a time prior to the amendments to 19 U.S.C. 1551 which added freight forwarders, contract carriers, and private carriers to the list of those which could be designated under that statute. Reading literally the last sentence of 19 U.S.C. 1553 would lead to the conclusion that bonded common carriers received preference in selection. That is, contract carriers or freight forwarders designated under 19 U.S.C. 1551 could not be employed for bonded movements wherever or whenever a bonded common carrier was reasonably available. Such a reading or interpretation would obviously be contra the intent of the Congress, as evidenced by the amendments to 19 U.S.C. 1551 which increased the types of bonded carriers which can be designated. The 1938 amendment to 19 U.S.C. 1553

was not intended to benefit common carriers at the expense of other carriers, and the term "bonded common carrier" should be read as "bonded carrier" as set out in the first sentence of that statute. Nonetheless, bonded merchandise may be moved otherwise than by bonded carrier only when none is reasonably available.

The fact that a bonded carrier requires more time to make delivery to the port of departure may not alone establish reasonable nonavailability. However, in dealing with certain commodities, e.g., agricultural products, longer delivery time may be the controlling factor if the delay affects the quality of the merchandise to be delivered. This same factor also applies to circuitous routes of bonded carriers.

As to a bonded carrier occasionally missing sailing times of ships which have purchased supplies from a ships' chandler, the reasonable availability of the bonded carrier may be controlled by the frequency of the misses compared to the frequency of on-time deliveries. Failure to deliver prior to sailing may best be solved by civil action for breach of contract.

When specialized equipment is needed to transport bonded merchandise, and no bonded carrier can supply the equipment needed for carriage, bonded carriage may be deemed not reasonably available.

The fact that a firm can transport merchandise at less cost than a bonded carrier is not alone controlling, since a carrier for hire must normally make a profit on its hauls. However, if in any case an applicant claims that the cost of carriage of particular merchandise by a bonded carrier will be disproportionate to the value of the goods and furnishes written evidence in support of this claim, the District Director shall present such evidence to headquarters with his recommendation.

Finally, the fact that no bonded carrier will allow a nonbonded carrier to transport under the bonded carrier's bond is no grounds for a finding of not reasonably available. Customs cannot penalize a bonded carrier by accepting a transportation and exportation bond from a private carrier merely because a bonded carrier refuses to enter into a contractual relationship with the private carrier. "Reasonably available" means that a bonded carrier is ready and able to transport bonded merchandise. Refusal to allow a party to use the bond and refusal to allow a party to use the bonded facilities are different situations.

Holding.—"Reasonably available" means that a bonded carrier is ready and able to transport merchandise under bond, with proper equipment, in a timeframe not injurious to the business or merchandise of his customers, at charges proportionate to the services rendered.

Each question of reasonable availability must be determined on its own merits, with the burden of showing lack of reasonable availability resting with the party applying for bonded privileges under the provisions of 19 U.S.C. 1553 and section 18.20(b) of the regulations.

(C.S.D. 81-61)

Carrier Control: Use of American-Built Fishing Vessel Previously Under Foreign Documentation in Territorial Waters and on High Seas

Date: August 21, 1980
File: VES-7-03/7-05/7-01
104328 MKT
(Your Ref: WSSL.1)

Our ruling 104328 MKT of December 19, 1979, in response to your letter of October 30, 1979 (your reference: WSSL.1), is in error insofar as the response to question (g) is concerned. In accordance with section 177.9(d), Customs Regulations, we are correcting our response. Because question (g) incorporates by reference question (e), with a change in circumstances, we are setting forth question (e) and our response, and question (g) and our response, as corrected:

Question (*e*). Can the vessel receive a catch from another vessel within territorial waters and then transship the catch to another vessel within territorial waters for the second vessel to bring the catch directly to a U.S. port?

Answer. No. This transportation would also be coastwise trade.

* * * * * * *

Question (*g*). In paragraph (e) would the answer change if the second transfer took place outside of territorial waters?

Answer. No. If the second transfer occurs outside territorial waters, a violation of the coastwise laws will be deemed to occur because the fish would have been transported for part of the voyage on a non-coastwise-qualified vessel.

The initial response to question (g) was in error because it overlooked the fact that section 883, title 46, United States Code, prohibits the transportation of merchandise by a vessel not qualified to engage in the coastwise trade for any part of the voyage.

Since the answer to question (g) is negative, that part of our original response relating to the documentation of the transporting vessel, which also is in error, should be disregarded.

(C.S.D. 81–62)

Foreign-Trade Zones: Use of First-In, First-Out (FIFO) Accounting Method for Fungible Merchandise

Date: August 28, 1980
File: FOR–1–RRUCDB WR
211647

Issue.—Whether the foreign-trade zones law or Customs Regulations preclude use of FIFO (first-in, first-out) accounting for fungible (commercially identical) merchandise in a foreign-trade zone.

Facts.—None presented.

Law and Analysis.—The use of FIFO (first-in, first-out accounting) is common in maintaining business inventories for fungible, i.e., commercially identical, merchandise. When items are commercially identical, it serves no purpose to segregate them. Neither the foreign-trade zones law (title 19, United States Code, sections 81a–u), nor the Customs Regulations (19 CFR part 146), prohibits the use of FIFO accounting. Section 146.44(a), Customs Regulations (19 CFR 146.44 (a)), which treats of domestic privileged merchandise, does require identification of merchandise by lot number, but this requirement is consistent with the use of FIFO.

The use of FIFO in a zone will permit the removal of commingled merchandise from a zone on a FIFO basis. This means that if 100 units of privileged foreign merchandise are brought into a zone, and subsequently 100 units of nonprivileged foreign merchandise, none of the nonprivileged foreign units can be considered removed until all of the privileged merchandise is removed.

The significant date for FIFO is the date of entry into the zone. It is not the date the merchandise was exported from a foreign country or the date the merchandise was imported into the United States.

Holding.—FIFO accounting in foreign-trade zones is not precluded by either the foreign-trade zones law or the Customs Regulations.

(C.S.D. 81–63)

Transaction Value: Status of Free Quota Price Required by Foreign Government

Date: September 4, 1980
File: CLA–2: RRUCV
542167 TLL
TAA 5

This is in reply to your letters dated May 12 and July 15, 1980, concerning the finding of transaction value under section 402 of the

Tariff Act of 1930, as amended by the Trade Agreements Act of 1979, for certain free quota merchandise.

As we understand the facts, your client contemplates two types of transactions in order to offset free quota prices which are required by the Taiwanese Government. Accordingly, you state that a manufacturer who has contracted to sell his goods to an American importer at $40 per dozen may invoice those goods to the importer at $60 per dozen in order to obtain free quota from the Taiwanese Government.

With regard to the two types of transactions proposed, the first is one in which all the goods purchased from a Taiwanese manufacturer would be invoiced at substantially higher than contract free quota prices. A letter of credit would be opened by the American importer at this higher price and, in return, the Taiwanese manufacturer would open a letter of credit for the difference between the actual contract price and the free quota price to the American importer. This latter letter of credit would be drawn upon by the American importer only after the goods in question have been received and the original letter of credit has been negotiated. Using a second method, certain goods purchased for the Taiwanese prices would be offset by corresponding lower than contract prices on other shipments for which the manufacturer already held quota. Under this type of program, there would be no transfer of additional funds.

With regard to your first proposal, it is our position that the transaction value would be $60. This is because the language of section 402(b) (4) (B) provides:

> (B) Any rebate of, or other decrease in, the price actually paid or payable that is made or otherwise effected between the buyer and seller after the date of the importation of the merchandise into the United States shall be disregarded in determining the transaction value under paragraph (1).

As the latter letter of credit is drawn upon after importation into the United States, it is clearly effected within the meaning of the statute as such from consideration. Transaction value would be $60.

Insofar as the second method is concerned, we find that it is in conflict with section 402(b)(2)(A)(ii). Section 402(b)(2)(A) provides, in relevant part:

> (2) The transaction value of imported merchandise determined under paragraph (1) shall be the appraised value of that merchandise for the purposes of this act only if * * * (ii) the sale of, or the price actually paid or payable for, the imported merchandise is not subject to any condition or consideration for which a value cannot be determined with respect to the imported merchandise;

Simply stated, the transaction under consideration is subject to a condition or consideration for which a value cannot be determined.

The proposed practice raises other concerns that deserve to be mentioned. First, we are reluctant to condone a practice which results in the violation of another country's commercial laws, and we cannot assure you that information of this nature would never be disclosed to the government in question. Second, the apparent willingness of the manufacturer to provide whatever invoice statements appear necessary to serve his and the importer's purpose casts serious doubt upon all transactions of this nature.

(C.S.D. 81-64)

Transaction Value: Whether Certain Service Costs and General Equipment Costs Are Assists; Reporting of Nondutiable Costs

Date: September 4, 1980
File: CLA-2: RRUCV
542122 TLL
TAA 4

This is in reply to your letter dated April 26, 1980, requesting a ruling with respect to the scope of the term "assists" as contained in title II of the Trade Agreements Act of 1979 (TAA). Specifically, you wish to obtain confirmation that certain assist costs which presently may be dutiable as assists, will no longer be dutiable under TAA. The assist costs which are the subjects of this request are:

1. Management services, accounting services, legal services, and other services related to imported merchandise rendered abroad or in the United States by persons paid by their U.S. employers, and
2. General purpose equipment, such as sewing machines, ovens, drill presses, etc., furnished free of charge or at reduced cost used abroad in the production of merchandise imported into the United States.

In addition you ask whether these nondutiable costs are to be reportable to Customs.

In response to your assist questions, it is important to recognize in the context of transaction value that only those items specifically referred to in section 402(b)(1) may be added to the price actually paid or payable when not otherwise included within the price. These items referred to in section 402(b)(1) are:

(A) The packing costs incurred by the buyer with respect to the imported merchandise;
(B) Any selling commission incurred by the buyer with respect to the imported merchandise;

338-577 O - 81 - 5

(C) The value, apportioned as appropriate, of any assist;
(D) Any royalty or license fee related to the imported merchandise that the buyer is required to pay, directly or indirectly, as a condition of the sale of the imported merchandise for exportation to the United States; and
(E) The proceeds of any subsequent resale, disposal, or use of the imported merchandise that accrue, directly or indirectly, to the seller.

Insofar as the term "assist" is concerned, section 402(h)(1)(A) provides:

(h) DEFINITIONS.—As used in this section—
(1)(A) The term "assist" means any of the following if supplied directly or indirectly, and free of charge or at reduced cost, by the buyer of imported merchandise for use in connection with the production or the sale for export to the United States of the merchandise:
(i) Materials, components, parts, and similar items incorporated in the imported merchandise.
(ii) Tools, dies, molds, and similar items used in the production of the merchandise.
(iii) Merchandise consumed in the production of the imported merchandise.
(iv) Engineering, development, artwork, design work, and plans and sketches that are undertaken elsewhere than in the United States and are necessary for the production of the imported merchandise.

Therefore, it is the position of the U.S. Customs Service that those items set forth in paragraph No. 1 of your letter, that is—

1. Management services, accounting services, legal services, and other services related to imported merchandise rendered abroad or in the United States by persons paid by their U.S. employers,

would not be added to the price actually paid or payable in order to determine transaction value for imported merchandise. However, if the price actually paid or payable includes a charge for these items, no authority exists in section 402(b)(3), or elsewhere, to remove them from the price actually paid or payable.

Insofar as the items contained in paragraph No. 2 of your letter are concerned, that is—

2. General purpose equipment, such as sewing machines, ovens, drill presses, etc., furnished free of charge or at reduced cost used abroad in the production of merchandise imported into the United States.

it is the position of headquarters, U.S. Customs Service, that these items are properly dutiable under section 402(h)(1)(A)(ii). Instructions toward that end were sent to field offices on July 2, 1980.

Your incoming letter includes reference to section 10.19 of the

Customs Regulations which describes the proper allocation between costs of fabrication and general expenses. As you know, one of the major thrusts of the TAA is the emphasis on generally accepted accounting principles. Under this new law, Customs will no longer possess the authority to reject information submitted on the basis of the accounting method by which that information was prepared. Therefore, it is our position that section 10.19 is not relevant to those appraisements made under the Trade Agreements Act of 1979.

Insofar as the continued reporting of these costs to Customs is concerned, Customs does not intend to burden importers with the requirement of submitting unnecessary cost information, so that it is not our present intention to require cost information relating to those items listed in paragraph No. 1 of your letter. This of course is to be distinguished from those situations in which Customs has a legitimate interest in learning the duty consequences of the particular transaction under scrutiny. For instance, when the question of 402(h)(1)(A)(iv) arises, Customs should be advised that certain engineering, development, artwork, etc., was undertaken within the United States and is therefore, not to be added to the price actually paid or payable.

Therefore, in order for us to make the conclusion that the particular item undertaken was not to be added to the price because it was undertaken in the United States, we have to possess the opportunity to examine it.

(C.S.D. 81-65)

Drawback: Filling, Sewing, and Labeling of Bags as a Manufacture or Production Under 19 U.S.C. 1313(a)

Date: September 4, 1980
File: DRA-1-RRUCDB SMC 211645

Issue.—1. Whether the filling of imported polypropylene bags with agricultural commodites constitutes a manufacture or production for drawback purposes.

2. Whether the holding in the first issue would differ if both ends of the polypropylene bags were domestically sewn shut or if the bags were domestically labeled.

Facts.—Prelabeled woven polypropylene bags designed to hold tea, peas, beans, grains, or other agricultural products are imported into the United States in a flat and empty condition. The bags are banded into quantities of 500 when imported. After importation they are fitted onto packing machines that are automatically set to enable

each bag to be filled with a desired quantity of product. Once filled, the bags are weighed for accuracy and sewn shut by machine. They are then ready for shipment.

Law and analysis.—Section 313(a) of the Tariff Act of 1930 (19 U.S.C. 1313(a)), requires that the exported articles upon which drawback is claimed be manufactured or produced with the use of imported merchandise. It is generally followed that a manufacture or production occurs when a new and different article emerges from the processing, having a distinctive name, character, or use.

Packing, packaging, and wrapping operations are not considered a manufacture or production for drawback purposes. If the package itself is a new and different article, having a distinctive name, character, and use from what is imported, the package is an article manufactured or produced in the United States. For example, if sheets of polypropylene were imported to be formed into bags and perhaps filled before exportation, drawback would be possible.

The given facts indicate, however, that the bags are formed ready for filling before importation and are not changed as to name, character or use once the proposed operation is completed. A mere sewing shut of one or both ends does not constitute a manufacture or production, nor would domestic labeling of the bags if imported unlabeled.

Holding.—1. The filling of imported polypropylene bags does not constitute a manufacture of production under the drawback law.

2. The holding in the first issue would not change if the bags were domestically sewn shut at both ends or domestically labeled.

(C.S.D. 81–66)

TIB: Fattening of Livestock as an Alteration Under Item 864.05, TSUS

Date: September 5, 1980
File: CON–9–04–RRUCDB WR 212009

Issue.—Whether the temporary importation of livestock to be fattened is an alteration within item 864.05, Tariff Schedules of the United States?

Facts.—The inquirer proposes to temporarily import cattle into the United States. The cattle would be fattened using the better pasture facilities available in the United States. After reaching slaughter weight each of the temporarily imported cattle would be exported to Mexico for slaughter. The inquirer states that cattle would be exported

within 1 year from the date of importation. It is understood that each of the cattle will be branded or otherwise identified so as to insure their exportation within the authorized time period.

Law and analysis.—Item 864.05, Tariff Schedules of the United States (TSUS) (19 U.S.C. 1202), provides for articles to be temporarily imported into the United States for repair, alteration, or processing. The initial period of importation is for 1 year and there may be two additional 1-year extensions if the circumstances are warranted. Articles imported under item 864.05, TSUS, are prohibited from entering the commerce of the United States and must be exported at or before expiration of the authorized temporary importation period. Failure to timely export all of the temporarily imported cattle is a breach of the bond given to guarantee compliance with the temporary importation laws and subjects the importer to liquidated damages under the bond.

Although the U.S. Customs Service has ruled that the training of a horse and the treatment of a sick horse are eligible operations under item 864.05, TSUS, it has previously denied eligibility to temporary importations of livestock for feeding purposes. The reasoning for those earlier denials is unclear.

We are of the opinion that an increase in the weight of the cattle is an alteration. It is clear that the term "articles" used in the tariff schedules is broad enough to include livestock. See general headnotes 1 and 3, TSUS, and part 1, schedule 1, TSUS. There is no indication that the term "articles" used in item 864.05, TSUS, was intended to be more restrictive than used in other parts of the tariff schedules. See headnote 1, schedule 8, TSUS. The courts have long interpreted "alteration" in the tariff laws in accordance with its common meaning. See *Greene* v. *U.S.*, 13 Cust. Ct. 273, Abs. 49676 (1944), and Sturm. "A Manual of Customs Law" 202 (1974). Dictionaries may be used to provide aid in determining common meaning. See *Sturm* 204 (1974), and cases cited therein. "Funk and Wagnalls New Standard Dictionary" (1937) defines alter as to cause to be different in some respect; to make some change in; vary in some degree, without making an entire change. "Websters New Collegiate Dictionary" (1977), defines alter as to make different without changing into something else. Therefore, the deliberate feeding of a steer to slaughter condition is an alteration; the feeding clearly changes one characteristic of the animal, its weight, without changing it into something else.

Holding.—Cattle may be temporarily imported under item 864.05, TSUS, for the purpose of feeding so as to bring them to slaughter condition.

(C.S.D. 81-67)

Foreign-Trade Zones: Maintaining Zone Status of Products Derived From Combining Privileged Domestic and Nonprivileged Foreign Crude

Date: September 5, 1980
File: FOR-1-RRUCDB L 210896

Issue.—May privileged domestic crude oil and nonprivileged foreign crude oil be mixed and distilled in a foreign-trade zone (FTZ) without the privileged domestic fraction losing its identity?

Facts.—A domestic company proposes to refine domestic and foreign crude oil in a FTZ. Crude oil will be discharged from tankers to storage tanks on shore in the FTZ under Customs supervision. Excess water and sediment will be drawn off after an appropriate settling period. The privileged domestic crude and nonprivileged foreign crude would then be cofed or simultaneously pumped in a specified ratio to the distillation column. The fractions collected from the distillation column then would be measured and the quantity derived from each source (i.e. privileged domestic and nonprivileged foreign crude) would be calculated based on the yield data for each crude. That quantity contained in each product tank would represent a given quantity of the particular commodity which would be assigned zone lot numbers, each designating a particular quantity and source of material with those quantities derived from privileged domestic crude treated as domestic and free of duty and taxes upon return to the Customs territory of the United States, and those quantities derived from nonprivileged foreign crude dutiable in their condition at time of constructive transfer to Customs territory.

In some cases, the products derived from the simultaneous distillation of the domestic and foreign crude oils may be further processed within the FTZ by such processes as reformation or catalytic cracking to produce, for example, gasoline or diesel fuel while still retaining the identity of the privileged domestic and no privileged foreign components.

Law and analysis.—The issue is primarily a technical one involving the manufacture in a FTZ of a product from commodities of different zone status while maintaining the identity and zone status of the commodities in the final product.

Section 146.23(c), Customs Regulations (19 CFR 146.23(c)), provides in part that domestic merchandise in a FTZ shall be deemed to have lost its identity if it cannot be positively identified by Customs officers as domestic merchandise on the basis of their examination of

the articles and their consideration of any proof that may be submitted by a party in interest.

In this case, the proposal is to cofeed domestic and foreign crude oil in specified quantities into a crude distillation unit. Distillation would result in several fractions such as liquefied petroleum gas, light naphtha, heavy naphtha, kerosene, light gas oil, heavy gas oil, and residium. The inquirer submits that the identity of the products derived from the simultaneous distillation of the domestic and foreign crudes can be established and determined through inventory control and accounting procedures.

In addition, some of the products derived from the simultaneous distillation of the domestic and foreign crudes may be further processed within the FTZ to produce finished products, such as gasoline or diesel fuel.

During January 1980, Customs officers visited the facilities of the inquirer and conducted a complete review of the physical facilities including the measurement systems involved in the flow of crude, semifinished, and finished products through the plant.

In a memorandum describing the results of this review (FOR–1–TROS PP, Apr. 16, 1980), it was concluded that it is technically feasible with respect to accounting and audit procedures to maintain and determine the identity of quantities of commingled crude and products in the FTZ, provided the cofed mode of operation, as proposed, and certain conditions, set out below, are followed.

The conditions are these:

1. Pumphouse operation is central to the control of the movement of all materials. More stringent monitoring of pumphouse operations by Customs would be necessary to verify the daily log of all pumping operations and to track the zone lots of foreign and domestic products. This would entail Customs supervision and witnessing of volumetric measurements on a daily basis and may require an additional Customs inspector or warehouseman.

2. Initially, Customs will require that all automatic gages used to obtain daily volumetric measurements be given a period of intensive scrutiny in which the automatic readings are confirmed by manual measurement to insure that data derived from the automatic system is equivalent to or better than that obtained from manual measurement. This procedure would not be applicable to liquefied petroleum gas measured by orifice meter.

3. The current system of having meters calibrated on a quarterly basis will be changed to calibration on a biweekly or monthly basis, depending upon the findings of the intensive comparison of the manual and automated systems.

4. Finished products will be shipped on a first-in first-out basis within each status, foreign or domestic, taking into consideration the restrictions on the exportation of domestic petroleum products.

A copy of the memorandum noted above has been made available to the inquirer.

On the basis of the above and assuming compliance with the stated conditions, it is our opinion that privileged domestic crude oil and nonprivileged foreign crude oil may be mixed in specified proportions and be simultaneously distilled and processed in a FTZ without the resulting fractions and products derived from the privileged domestic crude oil losing their identity as privileged domestic merchandise.

Holding.—Privileged domestic crude oil and nonprivileged foreign crude oil may be mixed in specified quantities and cofed into a crude distillation unit. The resulting fractions and products derived in part from privileged domestic crude and in part from nonprivileged foreign crude may retain their zone identity when the quantities derived from each of the cofed crude oils can be established through inventory control and accounting procedures approved by the Customs Service.

(C.S.D. 81–68)

Carrier Control: Use of Foreign Storage Tanker Permanently Positioned on High Seas

Date: September 12, 1980
File: VES–5–02–RUCDC
104744 CH

This ruling concerns the use of a foreign storage tanker on the high seas in the Gulf of Mexico in the course of the transportation of Alaskan North Slope crude oil to ports in the United States.

Issues.—1. What Customs requirements are imposed with respect to the use of a foreign storage vessel at a permanent station on the high seas in the Gulf of Mexico for the reception of Alaskan North Slope crude oil from onshore facilities in Panama and its transshipment in lightering tankers to ports in the United States?

2. Would the movement of the storage vessel at a slow speed during transfer operations, to assure greater safety in the transfer, after which it would return immediately to its permanent station, effect a prohibited coastwise transportation of the oil in a foreign vessel?

Facts.—Vessels transport Alaskan North Slope crude oil from Valdez, Alaska, to onshore facilities in Panama, whence it is taken in smaller vessels to ports in the United States. Because of a shortage of onshore tankage at U.S. ports of destination it is desired, in order

to avoid excessive demurrage charges, to have the tankers bringing the oil from the onshore facilities in Panama discharge the oil into a foreign VLCC, used exclusively as a storage vessel at a permanent position on the high seas in the Gulf of Mexico, whence it will be lightered in other tankers into ports in the United States as onshore tankage becomes available.

It is represented that conditions may require that during transfer operations the storage vessel be moving at a slow speed to assure greater safety in the transfer, after which it would return immediately to its permanent station.

Law and analysis.—Title 46, United States Code, section 883, provides in relevant part:

> No merchandise shall be transported by water, or by land and water, on penalty of forfeiture of the merchandise (or a monetary amount up to the value thereof * * *), between points * * * embraced within the coastwise laws either directly or via a foreign port or for any part of the transportation in any other vessel than (one qualified to engage in the coastwise trade) * * *.

T.D. 78–341 deals with the transshipment of Alaskan North Slope crude oil from Valdez, Alaska, to foreign storage vessels on the high seas in the Gulf of Panama and tence by lightering tankers through the Panama Canal to ports on the U.S. Atlantic and gulf coasts and Puerto Rico. C.S.D. 79–43 deals with the transshipment of this oil from Valdez to permanent onshore facilities in Panama and thence by lightering tankers through the Panama Canal to ports on the United States mainland, Puerto Rico, and the Virgin Islands. Manual Supplement 3250–02 (June 24, 1980) provides:

> Prior to commencement of discharge, U.S.-flag vessels arriving from a VLCC shall report arrival and produce manifests. This must be accomplished within 24 hours of arrival even though formal entry is not required.

Headquarters ruling 103226 held, with respect to a non-coastwise-qualified storage tanker rotating on a 360-degree axis about a single-point mooring buoy in the Santa Barbara Channel, receiving oil by pipeline from offshore wells and offlading it into lightering tankers for delivery to refineries on the U.S. mainland, that the storage vessel would not be considered to be engaged in coastwise trade. Legal Determination 3100–35 held, with respect to use of a non-coastwise-qualified crane barge to transfer bulk cargo from river barges to oceangoing vessels:

> However, where the movement of cargo is effected exclusively by the operation of the crane and not by the movement of the barge, except for necessary movements incidental to the lifting

operation while it is taking place, the Customs Service does not consider the use of the barge * * * as a use in coastwise trade. There would not be a coastwise transportation of the oil, provided that the storage vessel immediately returned to a permanent station it had previously occupied and would continue to occupy. If the storage vessel was underway only during the process of taking oil merely for safety reasons, and in no way participated in a point-to-point lading and unlading of oil, there would be no coastwise transportation.

Holding.—1. Vessels transporting Alaskan North Slope crude oil from Valdez to the onshore facilities in Panama, thence to a foreign storage vessel on the high seas in the Gulf of Mexico, and thence to U.S. ports, must all be vessels of the United States qualified to engage in the coastwise trade. Lightering tankers arriving from a foreign storage vessel on the high seas shall, within 24 hours after arrival, report arrival and produce inward manifests showing the quantity of oil brought in and the particular storage vessel or vessels from which the transporting vessel received the oil.

2. The movement of the storage vessel at a slow speed during transfer operations, solely to assure greater safety in the transfer, would not constitute any part of a coastwise transportation of the oil, provided that the storage vessel has a permanent location from which it moves to lade oil, and that it unlades oil at that permanent location. This ruling only addresses the contemplated movement from the perspective of laws enforced by the U.S. Customs Service.

(C.S.D. 81-69)

Classification: Rhodite 50; Glass Polishing Compound

Date: September 21, 1979
File: CLA-2:R:CV:MSP
061060 AI

This is in response to your request for Internal Advice No. 190/78, dated December 15, 1978, concerning the tariff classification of a product named Rhodite 50.

Issue.—The issue presented by your request is whether the instant merchandise is classifiable under the provision for waste and scrap not specially provided for, in item 793.00, Tariff Schedules of the United States (TSUS), free of duty, or under the provision for products of the United States returned after having been exported, without having been advanced in value or improved in condition by any process of manufacture or other means while abroad, in item 800.00, TSUS, free

of duty, or under the provision for mixtures of two or more organic compounds, in item 430.00, TSUS, and dutiable at 5 percent ad valorem.

Facts.—The merchandise in question is used as a glass polishing compound. A chemical analysis indicates Rhodite is an aqueous mixture of inorganic compounds, essentially composed of ceric oxide and traces of other Earth oxides and glass. In the instant case the Rhodite is manufactured in the United States and exported to the importer's wholly owned subsidiary in Mexico. During the polishing operation there, the material picks up glass particles ranging in size from rather coarse chips to extremely fine grains. The used material is returned to the United States for reprocessing (a screening operation), in which the coarse glass particles are removed, but the very fine glass particles remain. This cycle is repeated three times. After being used the third time, there is a resultant buildup of the fine glass particles and other contaminants, which renders the product unsuitable for further polishing applications despite further screening. It is not clear whether the thrice-used material will be subjected to a substantially different recovery process to regenerate the polishing preparation, or if it will be used as a source of cerium for other purposes. In any case, the spent polishing preparation would not be suitable for its original purpose at the time of its fourth importation.

Law and analysis.—In respect to classification under item 430.00, TSUS, the record indicates that the merchandise contains no organic compounds, and, thus, cannot be classified under that provision of law. In respect to classification under item 800.00, TSUS, it is clear that, upon review of prior judicial decisions and administrative rulings, the merchandise, by virtue of its use abroad, is not advanced in value or improved in condition abroad by any process of manufacture or other means. Accordingly, under the circumstances, item 800.00, TSUS, would be applicable in all cases.

Finally, in determining the applicability of item 793.00, TSUS, we must refer to the classical definition of waste found in *Patton* v. *United States*, 159 U.S. 500 (1895), where the Court stated (p. 503):

> * * * the prominent characteristic running through all these definitions is that of refuse, or material that is not susceptible of being used for the ordinary purposes of manufacture. It does not presuppose that the article is absolutely worthless, but that it is unmerchantable and used for purposes for which merchantable material of the same class is unsuitable.

Again, in *Harley Co.* v. *United States*, 14 Ct. Cust. Appls. 112, T.D. 41644 (1926), the court citing *Patton, supra*, stated, at page 115.

> * * * In the tariff sense, waste is a term which includes manufactured articles which have become useless for the original purpose for which they were made and fit only for remanufacture into something else. It also includes refuse, surplus, and useless stuff resulting from manufacture or from manufacturing processes and commercially unfit, without remanufacture, for the purposes for which the original material was suitable and from which material such refuse, surplus, or unsought residuum was derived. The latter class of waste might be appropriately designated as new waste, and includes such things as tangled spun thread, coal dust, broken or spoiled castings fit only for remanufacture. * * *

In view of the above, we must determine when the Rhodite becomes useless and fit only for remanufacture—for its original purpose. In this respect there is no question that the Rhodite remains a manufactured article and is not refuse material resulting from a manufacturing process after its use abroad.

The technical literature and laboratory analysis indicate that, on the first three importations, the material can be screened (removal of large glass particles). This process merely amounts to a repair which is similar to vulcanizing a used tire or resoling worn shoes (see *Supreme Tire and Rubber Co.* v. *United States*, C.D. 566 (1941). Thus, the Rhodite was not, at the time of the first three importations, "fit only for remanufacture into something else but was fit to be repaired and to be used for its original purpose." Therefore, item 793.00, TSUS, is not applicable.

Conversely, the record indicates that at the time of the fourth importation the Rhodite has become useless for the original purpose for which it was made, and fit only for remanufacture into something else (*Harley Co.* v. *United States, supra*).

Accordingly, classification in item 793.00, TSUS, is applicable to the Rhodite, at the time of the fourth importation. Note—the issue discussed in *David Studer et al.* v. *United States*, C.D. 3865 (1969), of whether an old or used article no longer suitable for its original purpose and which would be considered waste if fit only for remanufacture *must be considered something else because it can be used for another purpose without remanufacture* is an unusual one, but not pertinent on the facts to the instant case [italic added].

(C.S.D. 81–70)

Foreign-Trade Zones: Customs Control Over Merchandise Not Properly Admitted

Date: September 30, 1980
File: FOR–1–RRUCDB WR 211889

Issue.—Whether the Customs Service may assert control over any merchandise that is found in a foreign-trade zone without having been properly admitted?

Facts.—Customs officers discovered about 30 cases of liquor within a foreign-trade zone which had never been properly admitted into the zone. No person has claimed ownership of the liquor.

Law and analysis.—In order for merchandise to be admitted into a foreign-trade zone, an application for admission must be approved by a district director of Customs. Section 400.801(b), Foreign-Trade Zones Board Regulations (15 CFR 400.801(b)). Section 146.12, Customs Regulations (19 CFR 146.12), provides, in pertinent part, that merchandise may be admitted into a zone only on application and the issuance of a permit by the District Director of Customs in whose district the zone is located.

Merchandise in a foreign-trade zone is considered to be within the custody of the Customs Service to the same extent as imported merchandise unloaded on a pier or dock from a ship. The courts have recognized that imported goods are in Customs custody from the moment of their arrival until their formal release by the Customs Service. *Harris* v. *Dennie*, 28 U.S. 292 (1830); *Mungo* v. *U.S.*, 423 F. 2d 1351 (4th Cir. 1970); and *U.S.* v. *Harold*, 588 F. 2d 1136 (5th Cir. 1979). This recognition of Customs custody over goods in a foreign-trade zone is evident from the Foreign-Trade Zones Act of 1934, as amended (19 U.S.C. 81 a–u).

The first proviso of section 3 of that act (19 U.S.C. 81c), provides for a Customs officer to appraise and determine the applicable duties on merchandise in a zone on which there is a request for privileged status. The proviso also provides for the Secretary of the Treasury to establish regulations governing the manipulation or manufacture of that merchandise in a zone. The second proviso of section 3 of that act. allows the Secretary of the Treasury to establish regulations governing the use of domestic, duty-paid, and duty-free merchandise in a zone. Section 4 of that act (19 U.S.C. 81d), requires the Secretary of the Treasury to assign Customs officers and guards to a zone to protect the revenue.

Because such merchandise is in Customs custody, merchandise found in a foreign-trade zone without having been properly admitted

is to be treated as imported merchandise for which no entry is properly filed. The provisions of section 490, Tariff Act of 1930, as amended (19 U.S.C. 1490), apply to unadmitted merchandise in a zone to the same extent as unentered imported merchandise found on a pier or dock.

Holding.—The Customs Service has custody over merchandise in a foreign-trade zone which has not been granted admission into the zone to the same extent that it has over unentered imported merchandise found on a pier or dock. The provisions of 19 U.S.C. 1490, and applicable regulations are to be followed in disposing of that merchandise.

(C.S.D. 81-71)

Removal of Merchandise From a Foreign-Trade Zone: Whether Removal May Be by TIB Entry

Date: September 30, 1980
File: FOR-2-04-RRUCDB WR 212001

Issue.—Whether merchandise removed from a foreign-trade zone into the Customs territory by means of a temporary importation under bond can be returned to the zone without satisfying the temporary importation bond's condition of exportation?

Facts.—The inquirer proposes to move privileged foreign merchandise out of a foreign-trade zone into Customs territory under a temporary importation bond entry. For the purposes of this ruling, it is assumed that the inquirer is otherwise eligible for a temporary importation bond entry. After completing work on the merchandise in the Customs territory, the inquirer intends to move the merchandise back into the zone without losing the former zone status of the merchandise.

Law and analysis.—Under C.S.D. 79-454, the Customs Service held that merchandise may be entered into the Customs territory from a foreign-trade zone by a temporary importation under bond. That decision did not change the requirements governing temporary importation bond entries. The statutory requirement of exportation at the end of the importation period continues. Because that requirement was set by statute, the Customs Service lacks authority to waive it. See headnote 1(a), part 5C, schedule 8, Tariff Schedules of the United States (TSUS) (19 U.S.C. 1202).

Under section 3 of the Foreign-Trade Zones Act of 1934, as amended (19 U.S.C. 81c), the requirements of exportation for a temporary importation bond entry may be satisfied by admitting the temporarily

imported article into the zone under zone-restricted status. The section provides that such an article may not be returned to the Customs territory for domestic consumption unless the Foreign-Trade Zones Board considers the return to be in the public interest.

Holding.—Merchandise otherwise entitled to be temporarily imported under bond may be so entered from a foreign-trade zone, in accordance with C.S.D. 79–454. However, the statutory requirement of exportation to close out the temporary importation bond entry cannot be waived and must be satisfied either by a Customs-supervised exportation of the temporarily imported article or by its admission into a foreign-trade zone under zone-restricted status. Accordingly, merchandise entered into the Customs territory from a foreign-trade zone under a temporary importation bond will not regain its former status if returned to the zone to satisfy the exportation requirement of the temporary importation bond.

(C.S.D. 81–72)

Export Value: Dutiability of Sales From Manufacturers to Distributors

Date: October 17, 1980
File: CLA–2:RRUCV
065056#CW
TAA #10

This is in response to your memorandum of January 16, 1980, initiating a request for internal advice in connection with the importation by (an American corporation) of made-to-measure clothing from Hong Kong.

Issue.—Whether sales from Hong Kong manufacturing tailors to Hong Kong distributors of made-to-measure clothing destined at all times for the United States can be used to establish export value under section 402(b) of the Tariff Act of 1930, as amended by the Customs Simplification Act of 1956 (new law), and transaction value of imported merchandise under section 402(b) of the Tariff Act of 1930, as amended by title II of the Trade Agreements Act of 1979 (TAA).

Facts.—Distributors of made-to-measure clothing in Hong Kong employ representatives who take orders in the United States from U.S. customers. The representatives relay these orders, consisting of the types and styles of garments requested, the fabrics selected and the customers measurements to the distributors in Hong Kong. The distributors in turn, contract with various small tailoring estab-

lishments in Hong Kong to produce the garments. The tailors are responsible for all aspects of the production of the garments, including the purchase, for their own account, of the required fabrics from piece-goods houses. The tailors then sell the completed garments to the distributors. It is our understanding that under no circumstances are ready-made garments sold by the tailors to the distributors.

(The American corporation) a firm with offices in Hong Kong and the United States, consolidates large shipments of the completed garments in Hong Kong and forwards them to Detroit by air freight. This firm then files entries in Detroit, pays the required duties and forwards the garments, by mail, to each ultimate purchaser.

(The attorney) representing (the American corporation) has advised this office by letter of August 20, 1980, that the functions of the Hong Kong distributors are limited to transmitting orders and attending to the physical exportation of the merchandise. Counsel further states that the Hong Kong tailors all belong to the Hong Kong Tailoring Contractors Association which meets each year to set the uniform price which is to be paid by all buyers for the cut, make, and trim operations. (The attorney) also has informed this office, by telephone, that no relationship exists between the distributors and the tailors in Hong Kong and that (the American corporation) transports garments for approximately 150 distributors who, in turn, do business with approximately 300 tailors in Hong Kong.

While your request for internal advice is solely concerned with the possibility of establishing export value under the new law on the basis of the sales between the tailors and the distributors in Hong Kong, Import Specialist Martin Walsh of your office has orally requested that our response also address the question of whether these sales would support a finding of transaction value of imported merchandise under the TAA.

It should be noted that your office has provided no evidence regarding either the uniformity of the prices paid by the distributors or the extent to which the tailoring establishments sell the garments to all those who care to buy such merchandise in the ordinary course of trade at the wholesale level. Consequently, for purposes of the conclusions reached in this memorandum concerning export value under the new law, we are assuming that your office is satisfied from the evidence in your possession that the distributors pay uniform prices and that the tailors sell to all purchasers at wholesale.

It is the position of the Chief, Duty Assessment Branch, New York Seaport, as stated in a memorandum of March 12, 1980, to headquarters, that for purposes of serving as the basis for determining export value under the new law, the sales between the tailors and the distributors in Hong Kong are deficient in two respects. First, New

York maintains that the transactions in Hong Kong between the tailors and the distributors are not sales for exportation to the United States, within the meaning of section 402(b) (new law). In support of this contention, New York cites the decision in *Mitsui & Co., Ltd. and Mitsui & Co. (USA), Inc.* v. *United States*, 68 Cust. Ct. 266, R.D. 11767 (1972), wherein it was held that for an export value to arise from transactions within a foreign country, the merchandise must be "* * * irrevocably and undeniably, by reason of its nature and mode of handling, destined for export to the United States." The Chief of the Duty Assessment Branch concludes in this regard that: "the fact that the clothing in question is custom made does not irrevocably preclude resales in Hong Kong, although at a loss."

Second, New York contends that the merchandise is not, "freely sold * * * to all purchasers at wholesale," within the meaning of section 402(f) (new law) since there is no evidence of direct sales from the tailors to American importers at the price at which the garments are sold to the Hong Kong distributors. The decision in *United States* v. *Getz Bros., & Co. et al.*, 55 CCPA 11, C.A.D. 927 (1967), is cited by New York as authority for the proposition that sales within a foreign country from a manufacturer to an exporter or trading house may be used to establish export value under the new law only if the manufacturer also sells directly to American importers at equivalent prices.

Law and analysis.—a. Export value under the new law.—In regard to the issue of whether sales from the tailors to the distributors in Hong Kong qualify as sales for exportation to the United States, it is clear from a reading of the applicable court cases that each case is governed by its own particular facts and the evidence presented. See *R. J. Saunders & Co., Inc. (Perry H. Chipurnoi, Inc.)* v. *United States*, 42 CCPA 55, C.A.D. 570 (1974), *United States* v. *Getz Bros. & Co., et al.*, supra, and *Mitsui & Co., Ltd. and Mitsui & Co. (USA), Inc.* v. *United States*, supra. It was determined in the *Saunders* case that as the foreign manufacturer did not permit purchasers in that country to sell for home consumption but allowed resales only for export, the sales to these purchasers were sales for exportation to the United States, within the meaning of section 402a(d) of the Tariff Act of 1630, as amended by the Customs Simplification Act of 1956 (old law). In the *Getz* case, the court held, 55 CCPA at 20, that, "* * * notwithstanding the absence of a specific restriction that the plywood be exported, there was an effective control which assured the mills or manufacturers that the plywood was being sold for exportation." The effective control in that case referred to evidence which indicated that the nature of the affected merchandise prevented its sale in the foreign country and that, in addition only the merchandise destined for export was subject to certain quality

control. In *Mitsui*, the court was presented only with evidence that affected merchandise was marked and numbered for the United States by the manufacturer. Thus, it was held, 68 Cust. Ct. at 270, that the evidence did not, "* * * support a view that the merchandise in question was completely and effectively destined for export when sold by * * *" the manufacturer to the exporter.

We view the factual situation and degree of proof in the instant case concerning this issue as more closely approximating the facts and evidence in the *Getz* case then that in the *Mitsui* case. The information provided by your office indicates that the Hong Kong tailors produce garments only after receiving orders from the distributors and that each garment is produced to the precise measurements of the American purchaser and in accordance with the style and fabric selected by the ultimate wearer. Under these circumstances, we conclude, as did the court in the *Getz* case, 55 CCPA at 21, that, "* * * the nature of the transactions under scrutiny do not seem to us to operate in derogation of the establishment of a * * * price for export to the United States."

We also disagree with the assertion of the Chief of the Duty Assessment Branch, New York Seaport, that sales within a foreign country from a manufacturer to an exporter or trading house, who resells to the United States, may be used to establish export value under the new law only if the manufacturer also sells directly to American importers at equivalent prices. While the manufacturer in the *Getz* case sold directly to American importers as well as to trading houses in Japan, it is clear that the court did not view the existence of direct sales to American importers as a prerequisite to its determination that appraisement under export value should be based upon sales between the manufacturer and the trading houses. In fact, one of the precedents relied upon by the court in *Getz* was the *Saunders* case, in which the Canadian manufacturer sold only to Canadian purchasers who sold to customers in the United States.

Nevertheless, it was held in *Saunders* that the sales by the manufacturer to the Canadian purchasers could be used to establish export value under the old law. The court stated, 42 CCPA at 60:

> Although it is clear that the merchandise was shipped by the manufacturer or distributor direct to the customers of Murphy and Tropical in the United States, or direct to Murphy itself in the United States, the majority opinion seemingly infers that there was some infirmity connected with the fact that each of the involved firms was a Canadian company. We know of no requirement in section 402(d) (now sec. 402a(d)) that the sales be made to purchasers located in the United States.

Similarly, there is no requirement in the definition of export value

under the new law that the sales be made to purchasers located in the United States.

b. Transaction value under the TAA.—The term "transaction value of imported merchandise," which is the preferred basis of appraisement under the TAA, is defined in section 402(b) as: " * * * the price actually paid or payable for the merchandise when sold for exportation to the United States, plus amounts * * * " for certain items not included in that price. It is significant that this definition and the definitions of export value under the old and new laws contain the identical language "for exportation to the United States." Thus, our previous analysis of the court cases construing this language under the old and new laws in connection with the facts of this case is equally applicable here. We should emphasize, however, that while judicial decisions construing provisions of the old and new laws are pertinent, they are in no way binding upon this agency when construing similar provisions under the TAA.

Holding.—On the basis of the information provided, it is our opinion that the sales between the tailors and distributors in Hong Kong of made-to-measure clothing are appropriate for establishing export value under the new law, provided the price to the distributors includes all the essential elements of value, including the costs incurred by the tailors in purchasing the required fabrics. As previously stated, this conclusion is predicated on the assumption that your office is satisfied that the tailors sell to all who wish to purchase such merchandise in the ordinary course of trade at the wholesale level and that the distributors pay uniform prices for the made-to-measure garments.

We are also of the opinion that under the specific circumstances of this case, sales between the tailors and distributors in Hong Kong may be used to establish the price actually paid or payable for the merchandise when sold for exportation to the United States under section 402(b) (TAA), provided the requirements set forth in that statutory provision for establishing transaction value are satisfied. This is true even if the distributors, rather that the tailors, purchase the required fabrics from the piece-goods houses. The "Statement of Administrative Action" relating to Customs valuation, submitted to and approved by Congress along with the Trade Agreements Act of 1979, provides on page 2 as follows:

> In some cases, the price actually paid or payable may represent an amount for assembly of merchandise in which the seller has no interest in the merchandise other than an assembler. In such cases the price actually paid or payable, adjusted by the addition of the value of the components and required adjustments, will form the basis for the transaction value.

Thus, under circumstances in which the distributors purchase the fabrics and are billed by the tailors only for the cut, make, and trim, the prices paid or payable by the distributors should be adjusted by the addition of the cost of the fabrics to arrive at transaction value.

As you know, to arrive at the transaction value of the imported merchandise, amounts for the five items identified in section 402(b)(1) (e.g. packing costs and selling commissions) shall be added to the price paid or payable to the extent that these amounts are not otherwise included in the price. As no information pertaining to these items has been provided in connection with this case, we are unable to make any judgment or recommendation regarding whether amounts for these items should be added to the price paid or payable by the distributors.

It should be noted that this decision is based upon and limited to the facts as presented in your internal advice request. By memorandum of October 8, 1980, the Director, Duty Assessment Division, headquarters, requested the Office of Investigations to initiate an inquiry to verify the description of the Hong Kong wearing apparel trade set forth in your request.

(C.S.D. 81-73)

Value: Final List—Roll Hard Candy Made With Magnesium Stearate, Flavoring, and Sorbitol

Date: October 20, 1980
File: CLA-2:RRUCV
065047 BS

Re Application for Further Review of Protest No. 1803-9-000031.

DISTRICT DIRECTOR OF CUSTOMS,
Tampa, Fla.

DEAR SIR: The issue in the above-captioned matter is whether the imported merchandise is on the Final List, T.D. 54521.

The merchandise is a roll hard candy that is made with magnesium stearate, flavoring, and sorbitol, which is the principal ingredient. While generically called candy, it lacks the candy's historical ingredient, sugar. Sorbitol has about 60 percent of the sweetness of sugar.

It appears from the record that the earliest date a sugar-free candy was produced in a foreign country was 1955. Accordingly, there were no importations of such merchandise during fiscal year 1954, the year used to determine values for articles that were subsequently placed on the Final List.

Our New York office is of the opinion that the merchandise should be included on the Final List under the category entitled "sugar, molas-

ses and manufactures of candy, sugar * * * ." It is that office's belief that the term "sugar," as used in this context, should be broadly construed to encompass artificial sweeteners such as sorbitol; that the Final List does not specify the type of sugar that must be used as a sweetener in the provision for candy, sugar and all confectionary; and that the term "all confectionary" is intended to be construed as a class of merchandise rather than as a specific term of commerce, as it was taken from paragraph 506, Tariff Act of 1930, which did not limit sugar to any specific type. Furthermore, they point out that the subject merchandise is not sold or marketed as a dietetic candy and is similar to confectionary imported prior to the promulgation of the Final List.

On the other hand, the protestant submits that sorbitol is not recognized as a sugar. The latter is a sucrose and a carbohydrate refined from sugarcane or sugar beets while the former is a polyol derived from sources such as cherries, pears, peaches, and corn. Protestant notes that the Food and Drug Administration permits the imported product to be labeled sugar-free. Furthermore, it is pointed out that the product is designed for consumers who must avoid sugar, and that the price (at the time of the submission) was 50 percent higher than the leading roll hard candy made with sugar.

The purpose of the Final List was to categorize individual articles which would, under the new Customs value law (at that time), experience a reduction in value of at least 5 percent. The concern for adequate protection against decreases in dutiable values was directed toward the effect on particular articles and not simply an average effect on a whole series of articles. *National Carloading Corp.* v. *United States*, 55 Cust. Ct. 723, A.R.D. 191 (1965), rev'd. on other grounds, *Id.* v. *Id.*, 53 CCPA 57, C.A.D. 877 (1966). An examination of legislative intent reflects that an article must have been in existence at the time of the designation of the term on the list, since it is presumed that each article on the list had come under the Secretary's study (Secretary of the Treasury) and there was no intent to include an item not in existence or not identified as the time of the designation of the term on the list. See *National Carloading, supra.*

The specific category in question which is at issue provides a superior heading for "sugar, molasses, and manufactures of", and an inferior heading of "candy, sugar, and all confectionary, valued at 6 cents or more per pound."

In *Estee Candy Co., Inc.* v. *United States*, 65 Cust. Ct. 702 (1970), R.D. 11719, the issue was whether dietetic wafers were on the Final List under the category of "Baked Articles—Biscuits, cake wafers, and similar baked articles * * * ." The wafers were sugar- and salt-free

and also contained sorbitol, and had not been imported in fiscal year 1954.

The court stated that the Final List related only to identifiable tangible merchandise concerning which a basis of comparison of values existed. It found that this particular type of wafer was not in existence in 1954, and therefore could not have been appraised. Therefore, it was not on the Final List.

In keeping with this rationale, the Customs Service, in C.S.D. 79–34, stated the following:

> It has been the Customs Service's position that the determination of whether an article is on the Final List is primarily a factual one, that is a determination of whether or not the article involved was physically considered by the Secretary of the Treasury when he made his decision that the value of the article would be reduced by 5 percent or more by the application to the new value statute.

A review of the background study for the subject category of the Final List reflects that all of the candy and confectionary under consideration were, needless to say, made with sugar. Since sugar-free candy and confectionary were not being imported at the time, such products could not have been the subject of any such study. In this regard, we note that our Technical Services Branch has orally confirmed protestant's distinction between sugar and sorbitol. Additionally, it is our view that the common meaning of sugar does not include other sweeteners such as sorbitol.

We are of the opinion that the holding in *Estee Candy*, *supra*, is controlling in this matter. The cases cannot be distinguished. In each case a specific product which might otherwise be lumped within the meaning of a broad category of other products was not in existence at the time the particular category was prepared.

Under these circumstances, we find that the subject merchandise is not on the Final List and therefore cannot be appraised under foreign value, section 402(a), Tariff Act of 1930, as amended.

Protestant claims that if section 402 of the act is found to be applicable, then U.S. value, section 402(c), is the proper basis of appraisement. Protestant is of the opinion that the merchandise is not freely sold or freely offered for sale for export to the United States and that accordingly, statutory export value is not applicable. On the other hand, protestant claims that the domestic sales meet the criteria under statutory United States value, i.e., that the merchandise is freely sold in the United States within the meaning of section 402(c).

The fact that the importer is a selected purchaser in this case and that the parties are related does not necessarily exclude the finding of statutory export value, if the price of the merchandise fairly reflects

the market value. The record evidence is insufficient to make a finding in this regard. Accordingly, the appraising officer is directed to make that determination based upon information he may have available or upon additional submissions made by the importer. If statutory export value is found to be inapplicable, then U.S. value must be examined in order to determine whether that basis of appraisement is applicable. Where United States value does not apply, then the final basis of appraisement, constructed value, must be used.

You are directed to appraise the merchandise consistent with the foregoing.

(C.S.D. 81-74)

Carrier Control: Whether Submersible Capsule Component, Other Components and Spare Parts, Classifiable as "Vessel" and "Vessel Equipment" as Defined in 19 U.S.C. 1401(a)

Date: October 21, 1980
File: VES-12-01-RRUCDC
104519 DHR

To: District Director of Customs, Seattle, Wash.
From: Director, Carriers, Drawback and Bonds Division.
Subject: Classification of submersible capsule component of underwater wellhead service system—I.A. No. 9-80.

This ruling is in response to your request for internal advice concerning the classification of a submersible capsule used as a component of an underwater service system designed to service wellheads located on the seabed.

Issues.—

1. Classification as a Vessel

Whether a foreign-built submersible capsule which is used as a component of an underwater service system designed to service wellheads located on the seabed, which cannot be used independently of the other system components located on a support vessel, and which arrives in the United States on board the support vessel, together with the other components of the underwater service system, is classifiable as a "vessel" and, therefore, not subject to the provisions of the Tariff Schedules of the United States, pursuant to General Headnote 5 (e) of the schedules.

2. Classification as Vessel Equipment

Assuming the capsule is classifiable as a "vessel", whether the other components of the service system and spare parts for the capsule and

other components, all of which are carried on board the support vessel, are classifiable as "vessel equipment" of the capsule.

Facts.—

Operation of the Capsule

An underwater service system designed to service wellheads on the seabed is carried on board a support vessel. The system, comprised of a submersible capsule and support equipment, is not a part of the support vessel, but may be transferred from one vessel to another. The system may not be used for the intended purpose without use of the support vessel as a base; that is, it may not be operated independently of the support vessel.

The submersible capsule, with capacity for a crew of four, is the major component of the service system. The capsule has the general configuration of a diving bell; the base of the capsule is designed to fit onto a wellhead on the seabed. The capsule, which may not be operated independently, is lowered into the water from the support vessel on a cable from a gantry frame (also a component of the service system) located on the support vessel and throughout its operation remains tethered to the gantry frame by the cable. The capsule also has an umbilical cable between it and the system components on the support vessel to provide various life support functions, such as fresh air, electrical power, telephone service, television, and instrumentation requirements.

As the capsule has a slight buoyancy, it is required to winch itself on a cable down to the wellhead for docking. Affixed to the wellhead is a cable which can be triggered electrically from the surface so that a float attached to the cable rises to the surface, identifying the location of the cable and the wellhead. The cable then is attached to a winch at the bottom of the capsule, and the capsule winches itself down to the wellhead. The capsule attaches itself to the wellhead so that personnel from the capsule may be transferred to the wellhead for servicing operations.

The petitioner contends that:

1. The capsule is a vessel, and
2. The other components of the service system and spare parts for the capsule and those other components are "vessel equipment" of the capsule.

The request for internal advice is focused on these two questions.

Classification of the Capsule

Upon entry of the support vessel at Blaine, Wash., the owner claimed that the capsule is a vessel and therefore not subject to the Tariff Schedules, pursuant to General Headnote 5(e). The owner also

best copy available

claimed that the related support equipment and spare parts for the capsule, which are carried not on the capsule but on board the support vessel, are classifiable as "vessel equipment" of the capsule. Customs classified the capsule in item 678.50 of the schedules as a "machine, n.s.p.f." Duty was deposited and Customs agreed to withhold liquidation pending final determination of the capsule's classification. The Duty Assessment Branch, New York Seaport, concurs in Blaine's classification.

Service System Operator's Argument

The reasons assigned by the owner for asserting the capsule is classifiable as a "vessel" are as follows:

1. As defined for Customs purposes (19 U.S.C. 1401(a)), the term "vessel" includes every description of watercraft or other contrivance used or capable of being used as a means of transportation on or in water (except aircraft). The sole purpose of the capsule is to act as a means of water transportation. Reference is made to C.S.D. 79–369 and C.D. 4814.

2. The American Bureau of Shipping has classified the capsule as a submersible vessel.

3. The U.S. Coast Guard has classified the capsule as a vessel.

4. The U.S. Coast Guard, which is the agency responsible for documenting vessels, has documented the capsule as a vessel.

Law and analysis.—

Submersible Capsule as a Vessel

1. Although the term "vessel" is defined for purposes of the Tariff Schedules as "* * * every description of watercraft or other contrivance used, or capable of being used, as a means of transportation in water * * *," " * * * not every watercraft meeting the bare terms of the definition is entitled to entry into the United States duty free." *The United States* v. *Seagull Marine*, C.A.D. 1251 (1980).

The U.S. Court of Customs and Patent Appeals has ruled that for a watercraft to come within the statutory definition of vessel, the service upon which the structure in question can engage must be a maritime service. "It must have some relation to commerce or navigation, or at least some connection with a vessel employed in trade. It must be engaged in or in some sense related to commerce and navigation * * *. The test is the actual status of the structure as being fairly engaged in or suitable for, commerce or navigation as a means of transportation on water." *Hitner Sons Co.* v. *U.S.*, 13 C.C.P.A. 216, 221 (1922).

Not every article which can move on or in water with persons or merchandise is considered a vessel. Although lack of self-propulsion, restricted mobility, or dependence upon outside life support and

communications systems by themselves may not necessarily prevent a craft from being considered a vessel, these factors, considered cumulatively, must be accorded great weight.

In court decisions ruling whether articles are vessels, articles which do not have the appearance of conventional vessels are sometimes held to be vessels. However, what the craft designated as vessels do have in common, even in cases where non-self-propelled, is an unrestricted mobility and a nondependence on an agency outside the vessel for the the very sustenance of life on board.

The capsule under consideration, as distinct from a free-swimming submersible, is lowered into the water on a cable which then acts as a tether between the capsule and other components of the service system located on the support vessel. The capsule has only vertical mobility, and that mobility is limited to the capability of its winch within the confines of the wellhead area. Its mobility also is restricted by the umbilical cable connecting the capsule to the other components of the service system, located on the support vessel, and without which the capsule could not be operated.

C.S.D. 79–369, cited by the owner, holds that a jackup-type mobile drilling rig is a vessel because it is a means of transportation on water and is also a self-contained unit with unlimited mobility of movement on water. The submersible under consideration, as stated previously, does not have unlimited mobility.

C.D. 4814, also cited by the owner, holds that pneumatic liferafts are vessels because when inflated, such craft are a means of transportation on water. Notwithstanding that these craft have unlimited mobility, are not dependent upon outside sources for life support, and are similar in concept to mobile drilling rigs, the decision of the Customs Court in C.D. 4814, which was based on *Thornley & Pitt* v. *United States*, C.D. 2325 (1962), limited by T.D. 55703, was reversed by the CCPA in *The United States* v. *Seagull Marine*, *supra*.

2. The American Bureau of Shipping was requested by the Navy and by industry to prepare standards for the design and construction of submersibles which took into account considerations of safety and reliability. The ABS classified the capsule as a "vessel" in order that safety standards applicable to vessels generally might be made applicable to the capsule. However, the ABS classification in this respect is not controlling on Customs classification for purposes of dutiability.

3. and 4. The Coast Guard advises in its letter of November 14, 1978, that the capsule is a vessel for the purposes of vessel documentation. This determination, however, does not address the issue of whether the capsule is a vessel for purposes of dutiability under the

Customs laws, and, in any event, would not be controlling in respect of dutiability.

Capsule Equipment and Spare Parts as Vessel Equipment

The petitioner affirms that neither the capsule, the other components of the service system, nor spare parts for either, are equipment of the support vessel. The only questions raised are whether the capsule is a vessel and whether the other components of the service system and spare parts are vessel equipment of the capsule. Because it is axiomatic that to be vessel equipment the articles in question must be equipment of the vessel to which they appertain (see p. 3 of the petitioner's letter of Dec. 3, 1979), and the petitioner's position is that the components and spare parts under discussion are equipment of the capsule and not of the support vessel, a finding that the capsule is not a vessel is dispositive of the question of whether the components and spare parts are vessel quipment of the capsule.

Holding.—

1. Classification as a Vessel

A submersible capsule which is the major component of an underwater service system designed to service wellheads located on the seabed, which is put into the water from a cable attached to a gantry frame, another component of the underwater service system which in its entirety (except for the capsule) is located on a support vessel, which remains tethered by cable to the components of the system on the support vessel while in operation, which is able to travel only vertically to the wellhead by means of a cable from the wellhead to a winch on the submersible, and which is dependent on a third umbilical cable for its life support functions, is not a vessel as that term is used in General Headnote 5(e), Tariff Schedules of the United States, or as defined in title 19, United States Code, section 1401(a), or title 1, United States Code, section 3. Accordingly, the capsule is classifiable in item 678.50, Tariff Schedules of the United States, as a "machine, n.s.p.f."

2. Classification as Vessel Equipment

Since the capsule is not a vessel, the other components of the system, including spare parts for those components and for the capsule, are not vessel equipment of the capsule and are properly classifiable under the appropriate provisions of the Tariff Schedules.

(C.S.D. 81-75)

Vessel Repair: Dutiability of the Cost of Welding Doubler Plates to the Deck of a Vessel

Date: October 21, 1980
File: VES-13-18-RRUCDC
104797 JL

This ruling concerns a petition for remission of vessel repair duties filed under section 4.14(k), Customs Regulations.

Issue.—Is the cost of welding doubler plates to the deck of a vessel, following repair of a crack, classified as part of the cost of repairs (dutiable under 19 U.S.C. 1466(a)) or as an alteration to the hull of the vessel (nondutiable)?

Facts.—The SL-7 class vessels operated by the owner have experienced cracking of the deck plates adjacent to the corners of the cargo hatches. The owner "electively decided to carry out a permanent modification by adding a face plate on the deck cracking area * * * ." The owner maintains that the work constitutes a nondutiable alteration to the hull of the vessel. The Regional Commissioner, citing headquarters ruling 102777, dated July 22, 1977, liquidated the item as a dutiable repair.

It appears, though this is not crucial to the case, that (company name) made a modification drawing to remedy the condition on December 4, 1975, and the American Bureau of Shipping (ABS) survey report of September 24, 1975, confirming the remedial work was done in Vancouver in April 1979, refers to the condition being noted in a prior ABS report of February 7, 1975.

Law and analysis.—The vessel repair statute, 19 U.S.C. 1466, imposes a 50-percent ad valorem duty on the costs of foreign repairs and equipment purchases to U.S.-flag vessels.

It is well settled that work accomplished on a U.S.-flag vessel which amounts to an alteration to the hull and fittings of the vessel is not classified as a dutiable repair under 19 U.S.C. 1466. *Admiral Oriental Line* v. *United States*, T.D. 43585 (1929); however, the discussion in T.D. 43585 also focused in on what we believe to be a very practical consideration when considering whether certain work on a vessel should be considered a repair or a modification to the vessel; the specific phraseology we refer to is: " * * * the partitions put up in the vessel were erected where nothing existed before." Looking at this in practical terms, it is apparent that where, e.g., a vessel's superstructure was modified (beyond a de minimis addition) there was clearly a ship modification, but that is not the case when the work was the mere addition of face plates. To hold otherwise and rule that each repair of a vessel defect, or each foreign repair to strengthen a part of a build-

ing, is not a dutiable repair, would place a premium on having all such work done in foreign yards, a result entirely foreign to the purpose of section 1466. Certainly, the welding of plates to a hull to repair, or prevent leakage by reinforcement of a part of the hull, or to a stack to repair an eroded plate, would constitute a repair.

In headquarters ruling 102777, the SL–7 class vessel (vessel name) had deck plating cracks grooved out and welded. Immediately following the repair, doubler plates were welded in the area of the cracks. It was held that the addition of the doubler plates was part of the repair of the cracks and thus dutiable under section 1466.

In this case it is our opinion that the type of work involved does not constitute a vessel modification but rather it is a dutiable repair of a part of the vessel.

Holding.—The welding of plates to the deck area of a vessel for the purpose of strengthening the partitions of the deck which have cracked is classifiable as a dutiable repair under 19 U.S.C. 1466.

Effect on other rulings.—None.

Recent Unpublished Customs Service Decisions

The following listing of recent administrative decisions issued by the Office of Regulations and Rulings, U.S. Customs Service, and not otherwise published, is published for the information of Customs officers and the importing community. Although the decisions are not of sufficient general interest to warrant publication as Treasury decisions, the listing describes the issues involved and is intended to aid Customs officers and concerned members of the public in identifying matters of interest which recently have been considered by the Office of Regulations and Rulings.

A copy of any decision included in this listing, identified by its date and file number, may be obtained in a form appropriate for public distribution upon written request to the Office of Regulations and Rulings, attention: Legal Reference Area, room 2404, U.S. Customs Service, 1301 Constitution Avenue NW., Washington, D.C. 20229. These copies will be made available at a cost to the requester of 10 cents per page. However, the Customs Service will waive this charge if the total number of pages co pied is 10 or less.

Decisions listed in earlier issues of the CUSTOMS BULLETIN, through December 8, 1980, are available in microfiche format at a cost of $27.15 (15 cents per sheet of fiche). It is anticipated that additions to the microfiche will be made quarterly and subscriptions are available. Requests for the microfiche now available and for subscriptions should be directed to the Legal Reference Area. Subscribers will automatically receive updates as they are issued and will be billed accordingly.

Dated: February 10, 1981.

B. JAMES FRITZ,
Director,
Regulations and Information Division.

Date of decision	File No.	Issue
1- 9-81	104440	Vessel repairs: Liquidation of certain repairs as dutiable pursuant to 19 U.S.C. 1466
12- 3-80	104782	Vessel repairs: Request for advice concerning prepaid service contracts for repair of American-flag vessels
1-29-81	104801	Vessel repairs: American vessel damaged by collision while tied up at pier

Date of decision	File No.	Issue
12–17–80	104846	Instruments of international traffic: Aluminum tote bins used for shipments of phosphorus pentasulfied
1–15–81	104949	Unlading: Whether empty containers may be entered at one port and unladed at another without violation of 19 U.S.C. 1584
12– 3–80	104955	Whether Alaskan king crab transported from Alaska to Vancouver on a noncoastwise vessel may be imported into the United States
1–12–81	104973	Vessel: Coastwise trade implications of the U.S. Navy using a foreign-built vessel as a training vessel
1–27–81	104988	Private yachts: Request for refund of duty paid on a yacht that was not sold in the United States as originally contemplated
1–27–81	105004	Whether a public vessel of the Canadian Department of Fisheries and Oceans may engage in scientific research in U.S. waters
12–8–80	712993	Liquidation: Customs procedure for extending or suspending liquidation
1–27–81	714058	Country-of-origin marking: Rough-mounted trumpets imported for processing into finished musical instruments
1–26–81	714740	Country-of-origin marking: Four-bladed folding knife
1–21–81	715698	Infringement of copyright: Video games suspected of infringement of copyright
1–21–81	800002	Classification: Toy human figures of racing drivers and workers (737.40)
1–15–81	061465	American selling price: Basis of valuation to certain hip boots produced in Korea (700.60)
12–1–80	061976	Classification: Guiderails, fishplates, bolts, and nuts (664.10, 646.54, 923.91)
1–23–81	061978	Classification: Automobile body skids (657.25)
1–23–81	061991	Classification: Women's raincoats (382.00)
1–15–81	063870	Classification: Tracing vellum and drafting mylar (253.30, 771.43, 774.55)
1– 1–81	063871	Classification: Antenna transformers (682.07)
12– 4–80	064144	Duty assessment: Road marking material suitable for reflective pavement markings (432.10)
12–10–80	064391	Amendment to ruling of 9–8–80 to hold that batteries soldered into calculators are separately classifiable
1–29–81	064586	Classification: Baseball batting glove (734.56)
1–15–81	064672	Classification: Paint containing alkyd resins (408.48, 474.35)
12–18–80	064704	Classification: Sheets of laminates (771.43, 770.05, 770.07, 774.55, 222.60, 245.30)
12–15–80	065038	Classification: Portable electric lamps and fluorescent tubes (683.70, 683.80)
1–16–81	065160	Classification: Children's wearing apparel sets (382.06, 382.33, 382.78, 382.04, 382.00)

Date of decision	File No.	Issue
12- 1-80	065167	Classification: Components used in the manufacture of a marine propulsion engine system (657.25)
1- 7-81	065366	Classification: Overlaid front yokes on men's western-style shirts: ornamentation (308.04)
1-19-81	065397	Classification: Blouses (382.00)
1-21-81	065413	American selling price: Basis of valuation to certain women's "Kung Fu" style closed toe and closed back shoe
12-18-80	065415	American selling price: Basis of valuation to certain women's closed toe, closed back, indoor slippers (700.60)
12-15-80	065419	Classification: Ornamented jacket (380.00, 380.04)
1-22-81	065423	Classification: Incredible Hulk figure (737.22)
1- 1-81	065437	American selling price: Men's nylon jogger shoe with suede leather trim (700.60)
12-15-80	065442	Classification: Cotton fabrics (321.40, 322.40)
12-16-80	065455	Classification: Shipping bags made from transparent plastic strips (385.53)
1-15-81	065530	American selling price: Basis of valuation to certain chest waders and hip waders
1-15-81	065531	American selling price: Basis of valuation to certain chest waders and hip waders
12- 4-80	065546	Classification: Thiocarbamates (425.36)
12-16-80	065609	Classification: Pencil case (706.60)
1-21-81	065703	Classification: Rice straw mats (222.57)
1-23-81	065748	Classification: American selling price determinations for domestically produced hip waders and chest waders
1-19-81	065867	Classification: High voltage power transmission cables (688.04)
1-29-81	066326	Classification: A peanut and honey natural snack bar (157.10)
1-22-81	066330	Classification: Equipment used in joining polyethylene gas pipe (678.50, 660.97, 684.50, 685.90, 682.60, 657.25, 706.24, 648.97, 710.80, 674.70, 651.27, 649.43)
12-19-80	066395	Classification: View light (Christmas light set) (688.10)
1-15-81	066428	American selling price: Basis of valuation to certain chest waders (700.60)
1-23-81	066475	Classification: Steel pony rods (681.39)
12-18-80	066583	Classification: Zories (thonged sandals) (700.54)
12-16-80	066650	Classification: Manmade fibers used in the manufacture of shoes (355.25)
12-17-80	066653	Classification: Labels sewn on back patch pocket: Ornamentation
1-26-81	066657	Classification: Women's knit underwear (378.35, 378.05)
12- 4-80	066663	Classification: Men's pants and men's woven vest (380.39, 380.36)
12- 4-80	066664	Classification: Contoured backrest of cane framed in natural hardwood (727.40)
12- 1-80	066849	Classification: Bathrug (360.81)

The following listing of recent administrative decisions issued by the Office of Regulations and Rulings, U.S. Customs Service, and not otherwise published, is published for the information of Customs officers and the importing community. Although the decisions are not of sufficient general interest to warrant publication as Treasury decisions, the listing describes the issues involved and is intended to aid Customs officers and concerned members of the public in identifying matters of interest which recently have been considered by the Office of Regulations and Rulings.

A copy of any decision included in this listing, identified by its date and file number, may be obtained in a form appropriate for public distribution upon written request to the Office of Regulations and Rulings, attention: Legal Reference Area, room 2404, U.S. Customs Service, 1301 Constitution Avenue NW., Washington, D.C. 20229. These copies will be made available at a cost to the requester of 10 cents per page. However, the Customs Service will waive this charge if the total number of pages copied is 10 or less.

Decisions listed in earlier issues of the CUSTOMS BULLETIN, through December 8, 1980, are available in microfiche format at a cost of $27.15 (15 cents per sheet of fiche). It is anticipated that additions to the microfiche will be made quarterly and subscriptions are available. Requests for the microfiche now available and for subscriptions should be directed to the Legal Reference Area. Subscribers will automatically receive updates as they are issued and will be billed accordingly.

Dated: February 25, 1981.

B. JAMES FRITZ,
Director,
Regulations and Information Division.

Date of decision	File No.	Issue
2- 8-81	104944	Vessels: Applicability of coastwise laws to, and dutiability of a foreign built, foreign-flag vessel imported into the Virgin Islands for time charter use
2- 5-81	105005	Instruments of international traffic. Cables laid under U.S. territorial waters
2-13-81	105017	Vessels: Vessels assembled in the United States of foreign built components are foreign built vessels
2- 5-81	105021 104955 104859	Vessels: Transportation of Alaskan king crab on a non-coastwise-qualified vessel for entry and processing in violation of 46 U.S.C. 883
2- 9-81	105026	Vessels: Use of foreign-flag vessels to store gas, oil at a point within U.S. territorial waters
2- 4-81	713581	Country-of-origin marking: Potted plant material
2- 5-81	061922	Classification: Die-cast metal vehicles (737.95)
1- 1-81	062847	Classification: Bindery machines (668.10)

Date of decision	File No.	Issue
12-31-80	064942	Classification: Machines for processing computer paper output (676.30)
12-18-80	065094	Classification: Textile reinforced asphalt roofing material (355.25)
5-14-80	065134	Classification: Chest waders (700.60)
12-12-80	065137	Classification: Women's blouses (382.04, 382.81)
2- 5-81	065141	Classification: Ladies beach sandals (700.60)
1- 7-81	065184	Classification: Needlepoint kits (310.10, 310.90, 310.91, 386.09, 389.62, 651.05, 737.90)
1-18-81	065333	Classification: ASP: tennis shoes with canvas uppers (700.60)
1- 1-81	065430	Classification: Travel suitcase (706.13, 706.24)
1-16-81	065431	Classification: Parachute canopy and adjustable slide (657.40, 694.70, 807.00, 853.10)
1- 7-81	065561	Classification: Wooden nested dolls (737.22)
1- 1-81	065565	Classification: Insulation (774.55)
1-12-81	065582	Classification: Oil well pumping units (660.97)
2- 4-81	065611	Classification: Bench-mounted uncorking machines (678.50)
1-16-81	065638	Classification: Handpump oiler (662.50)
1-22-81	066189	Classification: Filter elements (661.95)
1- 1-81	066484	Classification: Hunting gloves (735.07)
1-16 81	066526	Classification: Leather motorcycle golves (735.07)
2- 5-81	066535	Classification: Women's nylon suede cross-country shoes (700.60)
1-19-81	066628	Classification: Beachcomber sandal (700. 58, 700.60)
1- 1-81	066862	Classification: Battery-operated liquor dispenser (683.32, 737.95)
1-13-81	066892	Classification: Glass cleaning cloth (355.65)
1- 1-81	066923	Classification: Solar lighter (756.06)

Decisions of the United States Court of Customs and Patent Appeals

(C.A.D. 1257)

INTERNATIONAL SPRING MFG. CO. *v.* UNITED STATES, No. 80–37

(—— F. 2d ——)

1. CLASSIFICATION OF IMPORTS—LEAF SPRING ON NON-SELF-PROPELLED TRAILERS.

Court of International Trade decision sustaining classification of leaf springs suitable for use on non-self-propelled trailers as other springs under item 652.88 rather than springs suitable for motor vehicle suspension, under item 652.84, affirmed.

2. ID.

Non-self-propelled trailers are not motor vehicles within meaning of item 652.84.

U.S. Court of Customs and Patent Appeals, February 19, 1981

Appeal from U.S. Customs Court

[Affirmed.]

Doherty and *Melahn*, attorneys for appellant.

Alice Daniel, Assistant Attorney General, *David M. Cohen*, Director, *Joseph I. Liebman*, Attorney in Charge, *Robert E. White*, of counsel.

[Oral argument on February 2, 1981 by *William E. Melahn* for appellant and *Robert H. White* for appellee.]

Before MARKEY, Chief Judge, RICH, BALDWIN, MILLER, and NIES, Associate Judges.

NIES, Judge.

[1] This appeal is from the judgment of the U.S. Customs Court (hereinafter the U.S. Court of International Trade), 496 F. Supp. 279, 85 Cust. Ct. ——, C.D. 4862, sustaining the classification of leaf springs suitable for use on various kinds of non-self-propelled trailers as other springs under item 652.88 rather than as springs suitable for motor vehicle suspension under item 652.84.[1] We affirm.

[1] The relevant provisions of the TSUS read:

Schedule 6, Part 3, Subpart F—Miscellaneous Metal Products

Springs and leaves for springs, of base metal: [Claimed]		
652.84	Suitable for motor vehicle suspension	4% ad val.
*	* * * * * *	*
[Classified]		
652.88	Other	9.5% ad val.

OPINION

[2] We agree with the decision of the Court of International Trade that the non-self-propelled trailers for which the imported springs are suitable are not motor vehicles within the meaning of item 652.84. Accordingly, we affirm the judgment of the court and adopt the opinion below as our own.

United States Court of International Trade

One Federal Plaza
New York, N.Y. 10007

Chief Judge

Edward D. Re

Judges

Paul P. Rao
Morgan Ford
Scovel Richardson
Frederick Landis
James L. Watson
Herbert N. Maletz
Bernard Newman
Nils A. Boe

Senior Judge

Samuel M. Rosenstein

Clerk

Joseph E. Lombardi

Decisions of the United States Court of International Trade

Abstracts

Abstracted Reappraisement Decisions

DEPARTMENT OF THE TREASURY,
February 17, 1981.

The following abstracts of decisions of the U.S. Court of International Trade at New York are published for the information and guidance of officers of the Customs and others concerned. Although the decisions are not of sufficient general interest to print in full, the summary herein given will be of assistance to Customs officials in easily locating cases and tracing important facts.

WILLIAM T. ARCHEY,
Acting Commissioner of Customs.

DECISION NUMBER	JUDGE & DATE OF DECISION	PLAINTIFF	COURT NO.	BASIS OF VALUATION	HELD VALUE	BASIS	PORT OF ENTRY AND MERCHANDISE
R81/51	Re, C.J. February 11, 1981	Amerex Trading Corp.	77-9-03902, etc.	Export value	Appraised values shown on entry papers less additions included to reflect currency revaluation	C.B.S. Imports Corp. v. U.S. (C.D. 4739)	New York Merchandise encompassed by entries shown on schedule attached to decision and judgment
R81/52	Re, C.J. February 11, 1981	Amerex Trading Corp.	79-4-00606	Export value	Appraised values shown on entry papers less additions included to reflect currency revaluations	C.B.S. Imports Corp. v. U.S. (C.D. 4739)	New York Merchandise encompassed by entries shown on schedule attached to decision and judgment
R81/53	Re, C.J. February 11, 1981	Marubeni America Corp., d.b.a. Marubeni Iida (America)	74-4-01015	Export value	Unit values found by appraising Customs official, less ocean freight and marine insurance, without additions for currency fluctuation	C.B.S. Imports Corp. v. U.S. (C.D. 4739)	Los Angeles Various articles exported from Japan during 1971, 1972, 1973
R81/54	Re, C.J. February 11, 1981	Starlight Trading, Inc.	75-3-00640	Export value	Appraised values shown on entry papers less additions included to reflect currency revaluation	C.B.S. Imports Corp. v. U.S. (C.D. 4739)	New York; Los Angeles Merchandise covered by entries enumerated on schedule attached to decision and judgment

R.81/55	Watson, J. February 11, 1981	Ciba Chemical and Dye Corp.	73-10-02873	U.S. value	U.S. selling prices, less 1% cash discount as determined by Customs officer at time of appraisement; less amounts shown on column III of schedule of appraisements and claims, attached to decision and judgment, representing profit and general expenses usually made in United States on sales of dyestuffs of same class or kind; less costs of transportation and insurance from place of shipment to place of delivery in amounts determined by Customs officer at time of appraisement; divided by 1.40 or such other factor applied by Customs officer, to allow for Customs duties payable on imported dyestuffs	U.S. v. Geigy Chemical Corporation et al. (C.A.D. 1155)	New York Benzenoid dyestuffs

DECISION NUMBER	JUDGE & DATE OF DECISION	PLAINTIFF	COURT NO.	BASIS OF VALUATION	HELD VALUE	BASIS	PORT OF ENTRY AND MERCHANDISE
R81/66	Watson, J. February 12, 1981	Geigy Chemical Corporation	R65/18623	U.S. value	U.S. selling prices, less 1% cash discount as determined by Customs officer at time of appraisement; less 24.2% representing profit and general expenses usually made in United States on sales of dyestuffs of same class or kind; less costs of transportation and insurance from place of shipment to place of delivery in amounts determined by Customs officer at time of appraisement; divided by 1.40 or such other factor applied by Customs officer, to allow for Customs duties payable on imported dyestuffs	U.S. v. Geigy Chemical Corporation et al. (C.A.D. 1155)	New York Benzenoid dyestuffs

R81/67	Watson, J. February 12, 1981	Geigy Chemical Corporation	R55/18634, etc.	U.S. value	U.S. selling prices, less 1% cash discount as determined by Customs officer at time of appraisement; less 24.2% representing profit and general expenses usually made in United States on sales of dyestuffs of same class or kind; less costs of transportation and insurance from place of shipment to place of delivery in amounts determined by Customs officer at time of appraisement; divided by 1.40 or such other factor applied by Customs officers, to allow for Customs duties payable on imported dyestuffs	U.S. v. Geigy Chemical Corporation et al. (C.A.D. 1155)	New York Benzenoid dyestuffs

DECISION NUMBER	JUDGE & DATE OF DECISION	PLAINTIFF	COURT NO.	BASIS OF VALUATION	HELD VALUE	BASIS	PORT OF ENTRY AND MERCHANDISE
R81/56	Watson, J. February 12, 1981	Geigy Chemical Corporation	R66/18195	U.S. value	U.S. selling prices, less 1% cash discount as determined by Customs officer at time of appraisement; less 24.2% representing profit and general expenses usually made in United States on sales of dyestuffs of same class or kind; less costs of transportation and insurance from place of shipment to place of delivery in amounts determined by Customs officer at time of appraisements; divided by 1.40 or such other factor applied by Customs officer, to allow for Customs duties payable on imported dyestuffs	U.S. v. Geigy Chemical Corporation et al. (C.A.D. 1155)	New York Benzenoid dyestuffs

R81/59	Watson, J. February 12, 1981	Geigy Chemical Corporation	R69/5391	U.S. value	U.S. selling prices, less 1% cash discount as determined by Customs officer at time of appraisement; less 28.9% representing profit and general expenses usually made in United States on sales of dyestuffs of same class or kind, less costs of transportation and insurance from place of shipment to place of delivery in amounts determined by Customs officer at time of appraisement; divided by 1.40 or such other factor applied by Customs officer, to allow for Customs duties payable on imported dyestuffs	U.S. v. Geigy Chemical Corporation et al. (C.A.D. 1155)	New York Benzenoid dyestuffs

ERRATUM

In CUSTOMS BULLETIN No. 6, dated February 11, 1981, volume 15, page 58, Slip Op. No. 81–4, on the second line from the bottom, Rao, Judge: should be inserted before the word Defendant.

International Trade Commission Notices

Investigations by the U.S. International Trade Commission

DEPARTMENT OF THE TREASURY

The appended notices relating to investigations by the U.S. International Trade Commission are published for the information of Customs officers and others concerned.

R. E. CHASEN,
Commissioner of Customs.

731-TA-38 (Preliminary)

TRUCK TRAILER AXLE-AND-BRAKE ASSEMBLIES, AND PARTS THEREOF, FROM HUNGARY

Notice of Institution of Preliminary Antidumping Investigation and Scheduling of Conference

AGENCY: U.S. International Trade Commission.

ACTION: Institution of preliminary antidumping investigation to determine whether there is a reasonable indication that an industry in the United States is materially injured, or is threatened with material injury, or the establishment of an industry is materially retarded, by reason of imports from Hungary of truck trailer axle-and-brake assemblies, and parts thereof, provided for in items 692.32 and 692.60 of the Tariff Schedules of the United States, alleged to be sold at less than fair value.

EFFECTIVE DATE: February 19, 1981.

FOR FURTHER INFORMATION CONTACT: John MacHatton, supervisory investigator; 202-523-0439.

SUPPLEMENTARY INFORMATION:

BACKGROUND

This investigation is being instituted following receipt of a petition on February 12, 1981, filed by Rockwell International Corp., Pittsburgh, Pa., on behalf of the domestic industry producing truck trailer

axle-and-brake assemblies. The petition alleged sales at less than fair value of truck trailer axle-and-brake assemblies produced in Hungary.

AUTHORITY

Section 733(a) of the Tariff Act of 1930 (19 U.S.C. 1673(a)) requires the Commission to make a determination of whether there is a reasonable indication that an industry in the United States is materially injured, or is threatened with material injury, or the establishment of an industry in the United States is materially retarded, by reason of imports alleged to be, or likely to be, sold in the United States at less than fair value. Such a determination must be made within 45 days after the date on which a petition is filed under section 732(b) or on which notice of an investigation commenced under section 732(a) is received from the Department of Commerce. Accordingly, the Commission, on February 19, 1981, instituted preliminary antidumping investigation No. 731–TA–38. This investigation will be subject to the provisions of part 207 of the Commission's Rules of Practice and Procedure (19 CFR 207, 44 F.R. 76457) and, particularly, subpart B thereof.

WRITTEN SUBMISSIONS

Any person may submit to the Commission on or before March 9, 1981, a written statement of information pertinent to the subject matter of this investigation. A signed original and 19 copies of such statements must be submitted.

Any business information which a submitter desires the Commission to treat as confidential shall be submitted separately, and each sheet must be clearly marked at the top Confidential Business Data. Confidential submissions must conform with the requirements of section 201.6 of the Commission's Rules of Practice and Procedures (19 CFR 201.6). All written submissions, except for confidential business data, will be available for public inspection.

CONFERENCE

The Director of Operations of the Commission has scheduled a conference in connection with this investigation for 10 a.m., e.s.t., on March 5, 1981, at the U.S. International Trade Commission Building, 701 E Street NW., Washington, D.C. Persons wishing to participate in the conference should contact the supervisory investigator for the investigation, Mr. John MacHatton; 202–523–0439. It is anticipated that persons in support of the petition for antidumping duties and persons opposed to such petition will each be collectively allocated 1 hour within which to make an oral presentation at the conference. Further details concerning the conduct of the conference will be provided by the supervisory investigator.

INSPECTION OF PETITION

The petition filed in this case is available for public inspection at the Office of the Secretary, U.S. International Trade Commission.

Issued: February 19, 1981.

KENNETH R. MASON,
Secretary.

In the Matter of
CERTAIN SCREW JACKS AND COMPONENTS THEREOF, INCLUDING COLD-WORKED PINION GEARS } Investigation No. 337-TA-98

Order

Pursuant to my authority as Chief Administrative Law Judge of this Commission, I hereby designate Administrative Law Judge Janet D. Saxon as Presiding Officer in this investigation.

The Secretary shall serve a copy of this order upon all parties of record and shall publish it in the Federal Register.

Issued: February 17, 1981.

DONALD K. DUVALL,
Chief Administrative Law Judge.

In the Matter of
CERTAIN STEEL ROD TREATING APPARATUS AND COMPONENTS THEREOF } Investigation No. 337-TA-97

Notice

Notice is hereby given that the preliminary conference in this investigation has been postponed at the request of the parties to 10 a.m., Friday, February 27, 1981. The preliminary conference will be held at the previously noticed address of 1010 Wisconsin Avenue NW., Suite 201, Washington, D.C. 20007.

The Secretary shall serve a copy of this order upon all parties of record and shall publish it in the Federal Register.

Issued: February 17, 1981.

DONALD K. DUVALL, *Judge,*
Presiding Officer.

(332-123)

PROBABLE ECONOMIC EFFECT ON DOMESTIC INDUSTRIES OF THE DESIGNATION OF THE PEOPLE'S REPUBLIC OF CHINA AS A BENEFICIARY DEVELOPING COUNTRY FOR PURPOSES OF THE U.S. GENERALIZED SYSTEM OF PREFERENCES

AGENCY: U.S. International Trade Commission.

ACTION: The Commission has rescheduled the hearing dates for the above captioned investigation, No. 332-123. The hearing will now be held in the Commission Hearing Room, 701 E Street NW., Washington, D.C. 20436, beginning at 10 a.m., e.s.t., on April 22, 1981, and continued on April 23, 1981, as required. Requests to appear at the public hearing should be filed in writing with the Secretary, U.S. International Trade Commission, 701 E Street NW., Washington, D.C. 20436; not later than noon, April 16, 1981.

The hearing was originally scheduled to begin April 21, 1981. The Commission's initial notice concerning the investigation, including the scope, the hearing, and procedures for submitting information, was published in the Federal Register of January 22, 1981 (46 F.R. 7108).

Issued: February 13, 1981.

By order of the Commission.

KENNETH R. MASON,
Secretary.

Index

U.S. Customs Service

	T.D. No.
Treasury decisions:	
Customs Approved Public Gauger	81-36
Foreign Currencies:	
Daily certified rates; February 9-13, 1981	81-38
Rates which varied from quarterly rates; February 9-13, 1981	81-39
Synopses of drawback decisions	81-37
Components	81-37-A
Pumps, booms, components	81-37-B
Piece goods	81-37-C
Bicycle parts	81-37-D
Cellulose film	81-37-E
Ethyl parathion technical	81-37-F
Diesel engines	81-37-G
Diesel engines, off-road tires, axles, tire chains, etc	81-37-H
Semiconductor assemblies, unfinished	81-37-I
Lubricating oil concentrates	81-37-J
Circuitboards, electronic assemblies	81-37-K
Air receiver tanks	81-37-L
Gold chains and bracelets	81-37-M
Piece goods	81-37-N
Film, raw stock	81-37-O
Rayon, velvet and cotton fabrics	81-37-P
Diesel engines	81-37-Q
Ink, clay coated paper printing	81-37-R
Cotton sheeting	81-37-S
Nitrocellulose	81-37-T
Boiler tubes	81-37-U
PVC resin	81-37-V
Glass, stem	81-37-X
Diesel and gas engines	81-37-Y
Watch heads, movements, modules, cases, dials, bracelets and straps	81-37-Z

	C.A.D. No.
Decisions of the United States Court of Customs and Patent Appeals:	
International Spring Mfg. Co. v. United States	1257

C.S.D. No.

Customs Service decisions:
Carrier control:
Canadian vessel conducting fisheries research in U.S. territorial waters 81-59
Use of American-built fishing vessel previously under foreign documentation in territorial waters and on high seas 81-61
Use of foreign storage tanker permanently positioned on high seas 81-68
Whether submersible capsule component, other components and spare parts, classifiable as vessel and vessel equipment as defined in 19 U.S.C. 1401(a) 81-74
Classification:
Applicability of item 807.00, TSUS, to component articles of U.S. origin in which holes are punched in a foreign plant 81-52
Schematics and drawings to accompany metalized Mylar computer tapes 81-53
Ceramic statues 81-54
Applicability of item 801.00, TSUS, to molds for toys imported, exported, then reimported into the United States 81-55
Figures representing beings from other planets 81-58
Rhodite 50; glass-polishing compound 81 69
Drawback: Filling, sewing, and labeling of bags as a manufacture or production under 19 U.S.C. 1313(a) 81-65
Export value: Dutiability of sales from manufacturers to distributors 81-72
Foreign-trade zones:
Use of first-in, first-out (FIFO) accounting method for fungible merchandise 81-62
Maintaining zone status of products derived from combining privileged domestic and nonprivileged foreign crude 81-67
Customs control over merchandise not properly admitted 81-70
General order warehouses: Notification of parties prior to sale of general order merchandise; order of preference 81-57
In-bond merchandise in-transit through the United States Reasonable availability of bonded common carriers; 19 U.S.C. 1553 81-60
Reliquidation: Failure of broker to amend immediate delivery permit; clerical error, 19 U.S.C. 1520(c)(1) 81-56
Removal of merchandise from a foreign-trade zone: Whether removal may be by TIB entry 81-71
TIB: Fattening of livestock as an alteration under item 864.05, TSUS 81-66
Transaction value:
Status of free quota price required by foreign government 81-63
Whether certain service costs and general equipment costs are assists; reporting of nondutiable costs 81-64
Value: Final list-roll hard candy made with Mangesium strarate, flavoring, and sorbitol 81-73
Vessel repair: Dutiability of the cost of welding doubler plates to the deck of a vessel 81-75

DEPARTMENT OF THE TREASURY
U.S. CUSTOMS SERVICE
WASHINGTON, D.C. 20229

OFFICIAL BUSINESS
PENALTY FOR PRIVATE USE, $300

POSTAGE AND FEES PAID
DEPARTMENT OF THE TREASURY (CUSTOMS)
(TREAS. 552)

U.S. GOVERNMENT PRINTING OFFICE : 1981

15/11

NEWARK PUBL'C LIBRARY

APR 1 1981

Customs Bulletin

Regulations, Rulings, Decisions, and Notices concerning Customs and related matters

and Decisions

of the United States Court of Customs and Patent Appeals and the United States Court of International Trade

Vol. 15 MARCH 18, 1981 No. 11

This issue contains

T.D. 81–40 through 81–44
Slip Op. 81–15
Reap. Abstracts R81/60 through R81/77
Appeal to United States Court of Customs and Patent Appeals
International Trade Commission Notices

THE DEPARTMENT OF THE TREASURY
U.S. Customs Service

T1.11/3:

NOTICE

The abstracts, rulings, and notices which are issued weekly by the U.S. Customs Service are subject to correction for typographical or other printing errors. Users may notify the U.S. Customs Service, Logistics Management Division, Washington, D.C. 20229, of any such errors in order that corrections may be made before the bound volumes are published.

For sale by the Superintendent of Documents, U.S. Government Printing Office, Washington, D.C. 20402. Price: $2.25 (single copy domestic); $2.85 (single copy foreign). Subscription price: $85.00 a year domestic; $106.25 a year foreign.

U.S. Customs Service

Treasury Decisions

(T.D. 81–40)

Synopses of Drawback Decisions

The following are synopses of drawback rates issued September 19, 1980, to November 17, 1980, inclusive, pursuant to sections 22.1 through 22.5, inclusive, Customs Regulations.

In the synopses below are listed for each drawback rate approved under 19 U.S.C. 1313(a), the name of the company, the specified articles on which drawback is authorized, the merchandise which will be used to manufacture or produce these articles, the factories where the work will be accomplished, the date the statement was signed, the basis for determining payment, the Regional Commissioner who issued the rate, and the date on which it was signed.

(DRA–1–09)

Dated: February 20, 1981.

GEORGE C. STEUART,
(For Marilyn G. Morrison, Director,
Carriers, Drawback and Bonds Division).

(A) Company: ADM Milling Co.
Articles: Wheat protein concentrate soy blend.
Merchandise: Imported "Hi Soy" full fat soy flour.
Factory: North Kansas City, Mo.
Statement signed: August 19, 1980.
Basis of claim: Used in.
Rate issued by Regional Commissioner of Customs: Chicago, October 8, 1980.

(B) Company: ATCO International.
Articles: Prefab housing.
Merchandise: Imported plywood siding, steel I-beams, floor covering, slide windows.
Factory: Waco, Tex.

Statement signed: October 29, 1980.
Basis of claim: Appearing in.
Rate issued by Regional Commissioner of Customs: Houston, November 6, 1980.

(C) Company: Al Acquaire Shirt Co.
Articles: Men's shirts.
Merchandise: Imported cotton fabric.
Factory: Paterson, N.J.
Statement signed: August 4, 1980.
Basis of claim: Used in.
Rate issued by Regional Commissioner of Customs: New York, November 4, 1980.

(D) Company: Advanced Micro Devices, Inc.
Articles: Integrated circuits and semiconductor devices.
Merchandise: Imported partially fabricated integrated circuits and semiconductor devices.
Factories: Sunnyvale, Calif.; Austin, Tex.
Statement signed: July 24, 1980.
Basis of claim: Appearing in.
Rate issued by Regional Commissioner of Customs: San Francisco, October 16, 1980.

(E) Company: Alkota Manufacturing, Inc.
Articles: High pressure steam cleaning machines.
Merchandise: Imported plunger pumps.
Factory: Alcester, S. Dak.
Statement signed: September 9, 1980.
Basis of claim: Appearing in.
Rate issued by Regional Commissioner of Customs: San Francisco, October 20, 1980.

(F) Company: Borne Chemical Co., Inc.
Articles: Finished marine lubricating oils.
Merchandise: Imported lubricating oil concentrates.
Factory: Elizabeth, N.J.
Statement signed: September 19, 1980.
Basis of claim: Used in.
Rate issued by Regional Commissioner of Customs: New Orleans, October 28, 1980.

(G) Company: Boston Acoustics.
Articles: Loudspeakers.
Merchandise: Imported tweeters, midrange, speaker cabinets.
Factory: East Boston, Mass.

Statement signed: September 15, 1980.
Basis of claim: Appearing in.
Rate issued by Regional Commissioner of Customs: Boston, October 9, 1980.

(H) Company: Carolina Chemicals, Inc.
Articles: Agricultural insecticides.
Merchandise: Imported dialifor.
Factory: West Columbia, S.C.
Statement signed: October 17, 1980.
Basis of claim: Used in.
Rate issued by Regional Commissioner of Customs: Baltimore, October 31, 1980.

(I) Company: Carpenter Technology Corp.
Articles: Seamless stainless steel cladding tube and zircaloy-4 fuel element channels.
Merchandise: Imported stainless steel bars and zircaloy-4 channel blanks.
Factory: El Cajon, Calif.
Statement signed: May 16, 1980.
Basis of claim: Used in, less valuable waste.
Rate issued by Regional Commissioner of Customs: Los Angeles, September 19, 1980.
Revokes: T.D. 80–204–E.

(J) Company: Cooper Energy Services.
Articles: En-Tronic control panels for gas compressors.
Merchandise: Imported racks, boards, control cable, nuts, mounting plates, speed controls; cards (matrix, input, output, display, diode, vibration modules, V/V converter, Rtd V converter, monitor, module scanner); annunciator (card point, card master, hex inverter); lens blanks, capacitors, bulbs, connectors, screws, conductors.
Factory: Mount Vernon, Ohio.
Statement signed: September 3, 1980.
Basis of claim: Used in.
Rate issued by Regional Commissioner of Customs: New York, October 22, 1980.

(K) Company: The Dextel Corp., Hysol Division.
Articles: Epoxy molding compound.
Merchandise: Imported synthetic resins.
Factory: Olean, N.Y.
Statement signed: September 19, 1980.

Basis of claim: Appearing in.
Rate issued by Regional Commissioner of Customs: Boston, October 9, 1980.

(L) Company: Dibrell Brothers, Inc.
Articles: Stemmed tobacco, product scrap, stems and stem scrap.
Merchandise: Imported leaf, leaves or scrap tobacco.
Factory: Danville, Va.
Statement signed: September 25, 1980.
Basis of claim: Used in, with distribution to the products obtained in accordance with their relative value at the time of separation.
Rate issued by Regional Commissioner of Customs: New York, October 16, 1980.

(M) Company: E. I. du Pont de Nemours & Co.
Articles: Sensitized photographic film and paper.
Merchandise: Imported gelatin.
Factories: Parlin and Rochester, N.J.; Brevard, N.C.
Statement signed: September 25, 1980.
Basis of claim: Appearing in.
Rate issued by Regional Commissioner of Customs: Baltimore, October 31, 1980.

(N) Company: ILI Corp.
Articles: Engine generator sets.
Merchandise: Imported diesel engines, generators, cowl silencers.
Factory: Bellevue, Wash.
Statement signed: September 9, 1980.
Basis of claim: Used in.
Rate issued by Regional Commissioner of Customs: San Francisco, October 20, 1980.
Revokes: T.D. 79–129–M.

(O) Company: J. & L. Tank, Inc.
Articles: Mobil cement bulkers—3 hopper.
Merchandise: Imported diesel engine and drum blowers.
Factory: Saginaw, Tex.
Statement signed: September 19, 1980.
Basis of claim: Appearing in.
Rate issued by Regional Commissioner of Customs: Houston, October 10, 1980.

(P) Company: Jeep Corp.
Articles: Automobiles and trucks.

Merchandise: Imported audio equipment and windshield wiper motors.
Factory: Toledo, Ohio.
Statement signed: October 13, 1980.
Basis of claim: Appearing in.
Rate issued by Regional Commissioners of Customs: Chicago, October 24, 1980.

(Q) Company: Matsushita Industrial Co.
Articles: Color television chassis, color television sets, and projection television.
Merchandise: Imported electronic and electrical parts and assemblies, cabinets, and miscellaneous parts.
Factory: Franklin Park, Ill.
Statement signed: September 10, 1980.
Basis of claim: Used in.
Rate issued by Regional Commissioner of Customs: Chicago, October 8, 1980.

(R) Company: Minn-Dak Seeds, Inc.
Articles: Cleaned and graded canary seed, mustard seed, and rapeseed.
Merchandise: Imported canary seed, mustard seed, and rapeseed.
Factory: Donaldson, Minn.; Drayton, N. Dak.
Statement signed: October 1, 1980.
Basis of claim: Appearing in.
Rate issued by Regional Commissioner of Customs: Chicago, October 28, 1980.

(S) Company: Minn-Dak Seeds, Ltd.
Articles: Cleaned and graded canary seed, mustard seed, and rapeseed.
Merchandise: Imported canary seed, mustard seed, and rapeseed.
Factory: Grand Forks, N. Dak.
Statement signed: October 1, 1980.
Basis of claim: Appearing in.
Rate issued by Regional Commissioner of Customs: Chicago, October 27, 1980.

(T) Company: Olivetti Corporation of America.
Articles: Electronic typewriters.
Merchandise: Imported typewriter parts.
Factory: Harrisburg, Pa.
Statement signed: December 18, 1979.
Basis of claim: Appearing in.
Rate issued by Regional Commissioner of Customs: Baltimore, October 10, 1980.

(U) Company: Positronic Industries.
Articles: Electronic connector assemblies.
Merchandise: Imported electronic connector components.
Factory: Rogersville, Mo.
Statement signed: October 21, 1980.
Basis of claim: Used in.
Rate issued by Regional Commissioner of Customs: Chicago, November 3, 1980.

(V) Company: Production Steel Inc.
Articles: Steel sheets, strips, and blanks cut to size.
Merchandise: Imported hot rolled steel sheet, cold rolled steel sheet, galvanized steel sheet and zincrometal, all in coil form.
Factories: Nashville and Knoxville Tenn.
Statement signed: October 10, 1980.
Basis of claim: Appearing in.
Rate issued by Regional Commissioner of Customs: New York, October 31, 1980.

(W) Company: Qume Corp.
Articles: Character printers, data character terminals, and motor/encoder assembly carriages.
Merchandise: Imported Yaskawa DC motors (61.6 type TO6M–OU12).
Factory: San Jose, Calif.
Statement signed: September 24, 1980.
Basis of claim: Appearing in.
Rate issued by Regional Commissioner of Customs: San Francisco, October 8, 1980.

(X) Company: RCA Corp.
Articles: Partially-finished tone-arm styluses.
Merchandise: Imported unfinished tone-arm styluses
Factory: Indianapolis, Ind.
Statement signed: September 17, 1980.
Basis of claim: Appearing in.
Rate issued by Regional Commissioner of Customs: Chicago, October 8, 1980.

(Y) Company: Samsonite Corp.
Articles: Attachés.
Merchandise: Imported attaché portfolios.
Factory: Denver, Colo.
Statement signed: October 21, 1980.
Basis of claim: Used in.
Rate issued by Regional Commissioner of Customs: Houston, October 24, 1980.

(Z) Company: Steves Sash & Door Co.
Articles: Wood doors.
Merchandise: Imported door skins.
Factories: San Antonio, Tex.; Lebanon, Tenn.
Statement signed: October 31, 1980.
Basis of claim: Used in.
Rate issued by Regional Commissioner of Customs: San Francisco, November 17, 1980

(T.D. 81-41)

Bonds

Approval and discontinuance of carriers bonds, Customs form 3587

Bonds of carriers for the transportation of bonded merchandise have been approved or discontinued as shown below. The symbol "D" indicates that the bond previously outstanding has been discontinued on the month, day, and year represented by the figures which follow. "PB" refers to a previous bond, dated as represented by figures in parentheses immediately following, which has been discontinued. If the previous bond was in the name of a different company or if the surety was different, the information is shown in a footnote at the end of the list.

Dated: February 27, 1981.

Name of principal and surety	Date of bond	Date of approval	Filed with district director/area director/amount
Air-Way Delivery Service, Inc., 3119 Jetero Blvd., Houston, TX; motor carrier; Aetna Ins. Co. D 1/22/81	Feb. 18, 1975	Feb. 28, 1975	Houston, TX $25,000
Alamo Express, Inc., 6013 Rittiman Plaza, San Antonio, TX; motor carrier; National Surety Corp. (PB 9/9/79) D 1/16/81[1]	Jan. 1, 1981	Jan. 16, 1981	Laredo, TX $25,000
Aqua Gulf Corp., 63-69 Hook Rd., Bayonne, NJ; motor carrier; Old Republic Ins. Co.	Dec. 29, 1980	Jan. 30, 1981	Newark, NJ $50,000
Arbet Truck Lines, Inc., 222 E. 135th Place, Chicago, IL; motor carrier; Aetna Ins. Co. D 1/7/81	Dec. 10, 1974	Dec. 26, 1974	Chicago, IL $50,000
B & W Cartage Co., 2932 W. 79th St., Chicago, IL; motor carrier; Hartford Accident & Indemnity Co.	Sept. 10, 1980	Jan. 5, 1981	Detroit, MI $50,000
Biscay Foreign Trade Warehouse, Inc., 216 N.E. 11th St., Miami, FL; motor carrier; St. Paul Fire & Marine Ins. Co.	July 1, 1980	Jan. 20, 1981	Miami, FL $50,000

See footnote at end of table.

Name of principal and surety	Date of bond	Date of approval	Filed with district director/area director/amount H
Bradley's Express, Inc., 2985 Berlin Trunpike, Newington, CT, motor carrier; American Motorist Ins. Co. D 1/29/81	Nov. 22, 1976	Nov. 22, 1976	New York Seaport $25,000
Bravo Transport, 6440 Hillandale Rd., Lithonia, GA; motor carrier; Washington Int'l Ins. Co.	Jan. 8, 1981	Jan. 9, 1981	New Orleans, LA $25,000
Butler-Jones Air Freight Inc., P.O. Box 1964, Salisbury, MD; motor carrier; Fidelity & Deposit Co. D 11/20/80	Dec. 18, 1979	Mar. 7, 1980	Baltimore, MD $25,000
Carolina Cartage Co., Inc., P.O. Box 1075, Greenville, SC; motor carrier; St. Paul Fire & Marine Ins. Co.	Nov. 18, 1980	Jan. 20, 1981	Charleston, SC $25,000
Central Express, Inc., Corpus Christi, TX; motor carrier; U.S. Fidelity & Guaranty Co. D 3/2/81	Feb. 21, 1968	Mar. 7, 1968	Galveston, TX $25,000
William M. Gibbons, Trustee of the Property of the Chicago Rock Island & Pacific Railroad Co., 332 S. Mi. Ave., Chicago, IL; rail carrier; Ins. Co. of North America D 1/7/81	Apr. 30, 1979	May 2, 1979	Chicago, IL $50,000
Crown Motor Lines, Inc., 2225 Broadway Ave., Jacksonville, FL; motor carrier; The Aetna Casualty & Surety Co. (PB 10/20/77 D 1/20/81	Oct. 20, 1980	Jan. 20, 1981	Tampa, FL $25,000
Ronald DeBoer, Rt. 1, P.O. Box 82, Milladore, WI; motor carrier; State Surety Co.	Dec. 12, 1980	Jan. 12, 1981	Milwaukee, WI $25,000
Electric Transport, Inc., P.O. Box 528, Eden, NC; motor carrier; Aetna Casualty & Surety Co.	Dec. 3, 1980	Jan. 26, 1981	Wilmington, NC $25,000
Holland Southwest, Inc., P.O. Box 1026, Flagstaff, AZ; motor carrier; St. Paul Fire & Marine Ins. Co. D 1/23/81	Feb. 27, 1980	May 5, 1980	Laredo, TX $25,000
Kipling Weldon Castleberry d.b.a. KASKO, 3310 Bobbie Lane, Garland, TX; motor carrier; St. Paul Fire & Marine Ins. Co. D 1/7/81	Sept. 18, 1980	Oct. 2, 1980	Dallas/Fort Worth, TX $25,000
Midwestern Distribution, Inc., P.O. Box 189, Fort Scott, KS; motor carrier; Western Surety Co.	Nov. 24, 1980	Jan. 22, 1981	St. Louis, MO $50,000
Remington Freight Lines, Inc., Box 315 U.S. 24 West, Remington, IN; motor carrier; The Aetna Casualty & Surety Co.	Feb. 4, 1981	Feb. 13, 1981	Cleveland, OH $50,000
Seatrain Lines Inc., and its wholly owned sub. Seatrain Gitmo, Inc., Port Seatrain, Weehawken, NJ; rail & water carrier; St. Paul Fire & Marine Ins. Co. D 1/19/81	Jan. 15, 1979	Jan. 15, 1979	New York Seaport, NY $100,000
Smith & Solomon Trucking Co. P.O. Box 2015, Howe Lane, New Brunswick, NJ; motor carrier; Western Surety Co. (PB 1/7/65) D 12/24/80[2]	Dec. 24, 1980	Dec. 24, 1980	New York Seaport $25,000

See footnote at end of table.

Name of principal and surety	Date of bond	Date of approval	Filed with district director/area director/amount
Super Speed Delivery & Messenger Service, Inc., 100 W. 43rd St., N.Y., NY; motor carrier; Washington International Ins. Co.	Jan. 26, 1981	Jan. 26, 1981	New York Seaport $25,000
Totem Ocean Trailer Express, Inc., P.O. Box 24908, Seattle, WA; motor carrier; Federal Ins. Co. (PB 4/1/76) D 1/7/81	Dec. 1, 1980	Jan. 7, 1981	Seattle, WA $50,000
Transportation Service, Inc., Box 918, 6025 Metcalf Lane, Shawnee Mission, KS; motor carrier; Ins. Co. of North America D 11/6/74	Sept. 15, 1973	Dec. 3, 1973	Laredo, TX $25,000
Whitfield Tank Lines, Inc., P.O. Box 7676, Phoenix, AZ; motor carrier; Peerless Ins. Co.	Jan. 15, 1981	Feb. 2, 1981	Nogales, AZ $25,000

[1] Surety is United States Fidelity & Guaranty Co.
[2] Surety is Peerless Ins. Co.

BON-3-03

MARILYN G. MORRISON,
Director,
Carriers, Drawback and Bonds Division.

(T.D. 81-42)

Notice of Proper Format for Bond for Public Gaugers

The purpose of this notice is to inform the public of the format of the bond to be filed by public gaugers who perform gauging of merchandise imported in bulk, as provided for in section 151.43, Customs Regulations (19 CFR 151.43). After July 1, 1981, Customs officers will not accept bonds from public gaugers unless they substantially comply with the format set out below.

Public gaugers are employed to measure the amount of merchandise imported in bulk and certify the accuracy of the amount the importer claims to be entering. Section 151.43 requires in part that, before acceptance by Customs of reports from a public gauger, the gauger shall file a bond in the amount of $10,000 to insure that the gauging will conform to approved standards and procedures.

A format for a "Bond for Public Gaugers" was published as an attachment to headquarters Circular BON-3-R:CD:D, dated July 10, 1975. Because headquarters notices were temporary in nature and because headquarters notices are no longer issued under the Customs Issuance System, Customs officers and interested members of the importing public have had difficulty in obtaining copies of the bond

format. Accordingly, the bond format has been reviewed and brought up to date, and is reproduced below.

The bond format has been redrafted to read more clearly. However, no change of substance has been made.

In a separate but related occurrence, T.D. 80–142, published in the Federal Register on May 30, 1980 (45 F.R. 36376), amended the Customs Regulations pertaining to the use of public gaugers in monitoring imports of petroleum and petroleum products.

TEXT OF BOND

The text of the new "Bond for Public Gaugers" is as follows:

DEPARTMENT OF THE TREASURY,
U.S. CUSTOMS SERVICE.

Bond for Public Gauger

Performing gauging under standards and procedures required by the U.S. Customs Service

Under this bond _____, of _____, as principal, and _____, of _____, as surety, agree to be bound to the United States of America in the sum of _____ dollars; for the payment of which we bind ourselves, our heirs, executors, administrators, successors, and assigns, jointly and severally. The principal and surety acknowledge that the principal wants the U.S. Customs Service to accept the principal's quantity reports of imported merchandise.

The principal and surety believe that the standards and procedures of gauging used by the principal are acceptable to the U.S. Customs Service.

Therefore this bond is conditioned on the satisfactory performance of the principal to gauge quantities of imported merchandise and to submit to the appropriate Customs officer any required report, proof, or abstract. If the principal gauges imported merchandise under the standards and procedures established by the Customs Regulations and properly submits every report, proof, and abstract required by law or regulation, the obligation under this bond is satisfied.

If the principal defaults by: (1) A failure to gauge in accordance with any required standard or procedure, or (2) by a failure to submit properly any required report, proof, or abstract, the principal and surety agree to pay liquidated damages under this bond. The principal and surety understand that the District Director of Customs at the district where the default occurred shall assess the liquidated damages under this bond in the amount of $25 or an amount equal to the value of the imported merchandise involved in the default, whichever

is greater, up to the sum of this bond. The principal and surety understand and agree that the District Director determines the value of the imported merchandise involved in any default under this bond and that the decision of the District Director is binding on all parties to this bond.

We, the obligors, for ourselves, our heirs, executors, administrators, successors, and assigns agree that on a breach of any condition of this bond, the United States may pursue its remedies against the principal or surety independently, or against both jointly, and the surety waives any right or privilege it may have of requiring, on notice, or otherwise, that the United States first commence action, intervene in any action of any nature whatsoever already commenced, or otherwise exhaust its remedies against the principal.

Witness our hands and seals this ____ day of _____, 19__.
Signed, sealed, and delivered in the presence of:

_____ (Name)	_____ (Address)		
_____ (Name)	_____ (Address)	_____ (Principal)	(Seal)
_____ (Name)	_____ (Address)		
_____ (Name)	_____ (Address)		
_____ (Name)	_____ (Address)	_____ (Surety)	(Seal)
_____ (Name)	_____ (Address)		

The use of a "Bond for Public Gaugers" substantially in accordance with the format reproduced above shall be required on or after July 1, 1981. Bonds prepared in accordance with the previous format will be accepted until that date.

Dated: March 2, 1981.

HARVEY B. FOX
(For Director, Office of
Regulations and Rulings).

(T.D. 81-43)

Foreign Currencies—Variances From Quarterly Rate

The following rates of exchange are based upon rates certified to the Secretary of the Treasury by the Federal Reserve Bank of New York, pursuant to section 522(c), Tariff Act of 1930, as amended (31 U.S.C. 372(c)), and reflect variances of 5 per centum or more from the quarterly rate published in T.D. 80-249 for the following countries. Therefore, as to entries covering merchandise exported on the dates listed, whenever it is necessary for Customs purposes to convert such cur-

rency into currency of the United States, conversion shall be at the following rates.

Austria schilling:	
February 16, 1981	Holiday
February 17, 1981	$0. 064329
February 18, 1981	. 065104
February 19, 1981	. 065854
February 20, 1981	. 067385
Belgium franc:	
February 16, 1981	Holiday
February 17, 1981	$0. 028289
February 18, 1981	. 028409
February 19, 1981	. 029002
February 20, 1981	. 029412
Denmark krone:	
February 16, 1981	Holiday
February 17, 1981	$0. 148093
February 18, 1981	. 149087
February 19, 1981	. 151826
February 20, 1981	. 154083
Finland markka:	
February 16, 1981	Holiday
February 17, 1981	$0. 242014
February 18, 1981	. 243843
February 19, 1981	. 245700
February 20, 1981	Quarterly
France franc:	
February 16, 1981	Holiday
February 17, 1981	$0. 196541
February 18, 1981	. 196850
February 19, 1981	. 200803
February 20, 1981	. 203666
Germany deutsche mark:	
February 16, 1981	Holiday
February 17, 1981	$0. 455373
February 18, 1981	. 457143
February 19, 1981	. 469043
February 20, 1981	. 477099
Ireland pound:	
February 16, 1981	Holiday
February 17, 1981	$1. 6830
February 18, 1981	1. 7030
February 19, 1981	1. 7250
February 20, 1981	1. 7675

Italy lira:	
February 16, 1981	Holiday
February 17, 1981	$0.000958
February 18, 1981	.000960
February 19, 1981	.000980
February 20, 1981	.000992
Netherlands guilder:	
February 16, 1981	Holiday
February 17, 1981	$0.418760
February 18, 1981	.419815
February 19, 1981	.429369
February 20, 1981	.437637
Portugal escudo:	
February 16, 1981	Holiday
February 17, 1981	$0.017483
February 18, 1981	.017575
February 19, 1981	.017606
February 20, 1981	.017762
Spain peseta:	
February 16, 1981	Holiday
February 17, 1981	$0.011370
February 18, 1981	.011414
February 19, 1981	.011368
February 20, 1981	.011786
Sri Lanka rupee:	
February 16–20, 1981	$0.055991
Sweden krona:	
February 16, 1981	Holiday
February 17, 1981	$0.214247
February 18, 1981	.214707
February 19–20, 1981	Quarterly
Switzerland franc:	
February 16, 1981	Holiday
February 17, 1981	$0.501128
February 18, 1981	.503018
February 19, 1981	.519481
February 20, 1981	.530504

Date: February 20, 1981.

GWENN KLEIN KIRSCHNER,
Acting Chief.

(T.D. 81-44)

Foreign Currencies—Daily Rates for Countries Not on Quarterly List

Rates of exchange based on rates certified to the Secretary of the Treasury by the Federal Reserve Bank of New York for the Brazil cruzeiro, People's Republic of China yuan, Hong Kong dollar, Iran rial, Philippines peso, Singapore dollar, Thailand baht (tical), and Venezuela bolivar

The Federal Reserve Bank of New York, pursuant to section 522(c), Tariff Act of 1930, as amended (31 U.S.C. 372(c)), has certified buying rates for the dates and foreign currencies shown below. The rates of exchange, based on these buying rates, are published for the information and use of Customs officers and others concerned pursuant to part 1590, subpart C, Customs Regulations (19 CFR 159, subpart C).

Brazil cruzeiro:	
February 16, 1981	Holiday
February 17–20, 1981	$0.0141
People's Republic of China yuan:	
February 16, 1981	Holiday
February 17, 1981	$0.603173
February 18–19, 1981	.613572
February 20, 1981	.624181
Hong Kong dollar:	
February 16, 1981	Holiday
February 17, 1981	$0.187564
February 18, 1981	.187899
February 19, 1981	.188768
February 20, 1981	.189394
Iran rial:	
February 16–20, 1981	Not Available
Philippines peso:	
February 16, 1981	Holiday
February 17–20, 1981	$0.1305
Singapore dollar:	
February 16, 1981	Holiday
February 17, 1981	$0.476985
February 18, 1981	.476872
February 19, 1981	.477783
February 20, 1981	.479616
Thailand baht (tical):	
February 16, 1981	Holiday
February 17–20, 1981	$0.0484

Venezuela bolivar:

February 16, 1981	Holiday
February 17–20, 1981	$0.2329

(LIQ–03–01 O:C:E)

Date: February 20, 1981.

GWENN KLEIN KIRSCHNER,
Acting Chief.

338-578 O - 81 - 3

United States Court of International Trade

One Federal Plaza

New York, N.Y. 10007

Chief Judge

Edward D. Re

Judges

Paul P. Rao
Morgan Ford
Scovel Richardson
Fredrick Landis
James L. Watson
Herbert N. Maletz
Bernard Newman
Nils A. Boe

Senior Judge

Samuel M. Rosenstein

Clerk

Joseph E. Lombardi

DECISION OF THE UNITED STATES COURT OF INTERNATIONAL TRADE

(Slip Op. 81–15)

THE BUDD COMPANY, RAILWAY DIVISION, PLAINTIFF, *v.* THE UNITED STATES, DEFENDANT, NISSHO-IWAI AMERICAN CORPORATION AND KAWASAKI HEAVY INDUSTRIES, LTD., INTERVENORS, PARTIES-IN-INTEREST AND BREDA COSTRUZIONI FERROVIARIE, S.p.A., INTERVENOR, PARTY-IN-INTEREST

Court No. 80–3–00505

Opinion and Order

[Motion for rehearing and, alternatively, a request for immediate appeal denied.]

(Dated February 20, 1981)

Barnes, Richardson & Colburn (*Andrew P. Vance* and *Raymond F. Sullivan, Jr.* at the oral argument and on the briefs) for the plaintiff.

Thomas S. Martin, Acting Assistant Attorney General; *David M. Cohen*, Director, International Trade Field Office, Commercial Litigation Branch (*Francis J. Sailer* at the oral argument and on the briefs), for the defendant.

Arent, Fox, Kintner, Plotkin & Kahn (*Stephen L. Gibson* and *Evan R. Berlack* at the oral argument and on the briefs) for Nissho-Iwai American Corporation and Kawasaki Heavy Industries, Ltd., intervenors parties-in-interest.

Bosco & Curry (*Joseph A. Bosco* at the oral argument) for Breda Costruzioni Ferroviarie, S.p.A., intervenor party-in-interest.

BOE, Judge: The defendant, United States, has filed its motion for a rehearing of the order of this court on the cross-motions for summary judgment of the respective parties hereto made and entered on December 29, 1980 (Slip Op. 80–15) or, alternatively, for modification of this court's remand order under date of December 29, 1980, supra, to include a statement that a controlling question of law is involved as to which there is substantial ground for differences of opinion and that an immediate appeal from the court's order of remand may materially advance the ultimate determination of this litigation.

The court having considered the memorandum briefs submitted and pursuant to the request for oral argument made by the defendant, the United States, and supported by the intervenors, having heard the arguments of respective counsel has concluded and determined:

1. No controlling question of law nor argument has been presented in connection with the motion for rehearing which has not been previously advanced by the defendant and the intervenors in support of their respective cross-motions for summary judgment.

2. No controlling question of law as to which there is a substantial ground for differences of opinion exists. The court recognizes the disagreement on the part of the defendant and the intervenors with respect to its interpretation of the extent of the alleged burden of proof falling upon the plaintiff in connection with the preliminary determination by the International Trade Commission with respect to a reasonable indication of injury in the within proceedings. However, the gravamen of this court's decision lies in its order of remand and request to the International Trade Commission to supplement its findings of fact adopted in connection with its administrative determination in the above matter. In the judgment of the court a remand was required in order to discern a rational basis upon which the findings of the Commission were adopted.

In view of the fact that neither the findings of fact nor conclusions indicated whether the Commission had considered information relating to the importation of components and parts, included in the administrative record as well as such other information as would have

been available at the time of the administrative investigation, the court has requested the Commission to consider such information and, if warranted, to supplement its findings and conclusions accordingly. Indeed, the matter of burden of proof, upon which the defendant and the intervenors predicate their alternative request for an immediate appeal, cannot be said to constitute herein a controlling question of law. Nor in our opinion would an appeal from this court's prior opinion and order under date of December 29, 1980, supra, materially advance the ultimate determination of this litigation, now therefore, it is hereby ORDERED

1. That the motion for rehearing of the defendant and the intervenors be and is hereby denied.

2. It is further ORDERED that defendant's and the intervenors' alternative request to proceed by way of an immediate appeal be and is hereby denied, and

3. It is further ORDERED that the prior order of this court under date of January 14, 1981, staying the remand of the above-entitled action to the U.S. International Trade Commission pending consideration of a motion for rehearing be and is hereby vacated, and

4. It is further ORDERED that within a period of 30 days from and after the date of entry of this order the International Trade Commission shall supplement its present findings of fact by the adoption of such additional findings and resulting conclusions of law as may be warranted in conformity with the prior order of remand of this court under date of December 29, 1980.

Decisions of the United States Court of International Trade

Abstracts

Abstracted Reappraisement Decisions

DEPARTMENT OF THE TREASURY, *January 19, 1981.*

The following abstracts of decisions of the United States Court of International Trade at New York are published for the information and guidance of officers of the customs and others concerned. Although the decisions are not of sufficient general interest to print in full, the summary herein given will be of assistance to customs officials in easily locating cases and tracing important facts.

WILLIAM T. ARCHEY,
Acting Commissioner of Customs.

DECISION NUMBER	JUDGE & DATE OF DECISION	PLAINTIFF	COURT NO.	BASIS OF VALUATION	HELD VALUE	BASIS	PORT OF ENTRY AND MERCHANDISE
R81/60	Watson, J. February 17, 1981	Ciba Chemical and Dye Company	R66/16987	United States value	U.S. selling prices, less 1% cash discount as determined by Customs officer at time of appraisement; less 23.5% representing profit and general expenses usually made in United States on sales of dyestuffs of same class or kind; less costs of transportation and insurance from place of shipment to place of delivery in amounts determined by Customs officer at time of appraisement; divided by 1.40 or such other factor applied by Customs officer, to allow for Customs duties payable on imported dyestuffs	U.S. v. Geigy Chemical Corporation et al. (C.A.D. 1155)	New York Benzanoid dyestuffs

R81/61	Watson, J. February 17, 1981	Ciba Chemical & Dye Corp.	73-5-01173	United States value	U.S. selling prices, less 1% cash discount as determined by Customs officer at time of appraisement; less amounts shown on column III of schedule of appraisement, and claims, attached to decision and judgment, representing profit and general expenses usually made in United States on sales of dyestuffs of same class or kind; less costs of transportation and insurance from place of shipment to place of delivery in amounts determined by Customs officer at time of appraisement; divided by 1.40 or such other factor applied by Customs officer, to allow for Customs duties payable on imported dyestuffs	U.S. v. Geigy Chemical Corporation et al. (C.A.D. 1155).	New York Benzenoid dyestuffs

DECISION NUMBER	JUDGE & DATE OF DECISION	PLAINTIFF	COURT NO.	BASIS OF VALUATION	HELD VALUE	BASIS	PORT OF ENTRY AND MERCHANDISE
R81/62	Watson, J. February 17, 1981	Geigy Chemical Corporation	R66/20381	United States value	U.S. selling prices, less 1% cash discount as determined by Customs officer at time of appraisement; less 24.2% representing profit and general expenses usually made in the United States on sales of dyestuffs of same class or kind; less costs of transportation and insurance from place of shipment to place of delivery in amounts determined by Customs officer at time of appraisement; divided by 1.40 or such other factor applied by Customs officer, to allow for Customs duties payable on imported dyestuffs	U.S. v. Geigy Chemical Corporation et al. (C.A.D. 1155)	New York Benzenoid dyestuffs

R51/63	Watson, J. February 17, 1981	Geigy Chemical Corporation	R66/22296	United States value	U.S. selling prices, less 1% cash discount as determined by Customs officer at time of appraisement; less 25.7% representing profit and general expenses usually made in the United States on sales of dyestuffs of same class or kind; less costs of transportation and insurance from place of shipment to place of delivery in amounts determined by Customs officer at time of appraisement; divided by 1.40 or such other factor applied by Customs officer, to allow for Customs duties payable on imported dyestuffs	U.S. v. Geigy Chemical Corporation, et al. (C.A.D. 1155)	New York Benzenoid dyestuffs

DECISION NUMBER	JUDGE & DATE OF DECISION	PLAINTIFF	COURT NO.	BASIS OF VALUATION	HELD VALUE	BASIS	PORT OF ENTRY AND MERCHANDISE
R81/64	Watson, J. February 17, 1981	Geigy Chemical Corporation	R64/22300	United States value	U.S. selling prices, less 1% cash discount as determined by Customs officer at time of appraisement; less 24.2% representing profit and general expenses usually made in the United States on sales of dyestuffs of same class or kind; less costs of transportation and insurance from place of shipment to place of delivery in amounts determined by Customs officer at time of appraisement; divided by 1.40 or such other factor applied by Customs officer, to allow for Customs duties payable on imported dyestuffs	U.S. v. Geigy Chemical Corporation et al. (C.A.D. 1155)	New York Benzenoid dyestuffs

R81/65	Watson, J. February 17, 1981	Geigy Chemical Corporation	R66/25875	United States value	U.S. selling prices, less 1% cash discount as determined by Customs officer at time of appraisement; less 24.2% representing profit and general expenses usually made in the United States on sales of dyestuffs of same class or kind; less costs of transportation and insurance from place of shipment to place of delivery in amounts determined by Customs officer at time of appraisement; divided by 1.40 or such other factor applied by Customs officer, to allow for Customs duties payable on imported dyestuffs	U.S. v. Geigy Chemical Corporation et al. (C.A.D. 1155)	New York Benzenoid dyestuffs

DECISION NUMBER	JUDGE & DATE OF DECISION	PLAINTIFF	COURT NO.	BASIS OF VALUATION	HELD VALUE	BASIS	PORT OF ENTRY AND MERCHANDISE
R81/66	Watson, J. February 17, 1981	Geigy Chemical Corporation	R70/1624	United States value	U.S. selling prices, less 1% cash discount as determined by Customs officer at time of appraisement; less 28.9% representing profit and general expenses usually made in the United States on sales of dyestuffs of same class or kind; less costs of transportation and insurance from place of shipment to place of delivery in amounts determined by Customs officer at time of appraisement; divided by 1.40 or such other factor applied by Customs officer, to allow for Customs duties payable on imported dyestuffs	U.S. v. Geigy Chemical Corporation et al. (C.A.D. 1155)	New York Benzenoid dyestuffs

R81/67	Watson, J. February 17, 1981	Intracolor Corporation	73-9-02673	United States value	U.S. selling prices, less 1% cash discount as determined by Customs officer at time of appraisement; less 29.2% representing profit and general expenses usually made in the United States on sales of dyestuffs of same class or kind; less costs of transportation and insurance from place of shipment to place of delivery in amounts determined by Customs officer at time of appraisement; divided by 1.40 or such other factor applied by Customs officer, to allow for Customs duties payable on imported dyestuffs	U.S. v. Geigy Chemical Corporation et al. (C.A.D. 1155)	New York Benzenoid dyestuffs

DECISION NUMBER	JUDGE & DATE OF DECISION	PLAINTIFF	COURT NO.	BASIS OF VALUATION	HELD VALUE	BASIS	PORT OF ENTRY AND MERCHANDISE
R81/68	Watson, J. February 18, 1981	Ciba Chemical & Dye Corp.	73-02-00380	United States value	U.S. selling prices, less 1% cash discount as determined by Customs officer at time of appraisement; less 28.9% representing profit and general expenses usually made in the United States on sales of dyestuffs of same class or kind; less costs of transportation and insurance from place of shipment to place of delivery in amounts determined by Customs officer at time of appraisement; divided by 1.40 or such other factor applied by Customs officer, to allow for Customs duties payable on imported dyestuffs	U.S. v. Geigy Chemical Corporation et al. (C.A.D. 1155)	New York Benzenoid dyestuffs

82/60	Watson, J. February 18, 1981	Ciba Co., Inc.	73-9-02674	United States value	U.S. selling prices, less 1% cash discount as determined by Customs officer at time of appraisement; less 28.9% representing profit and general expenses usually made in the United States on sales of dyestuffs of same class or kind; less costs of transportation and insurance from place of shipment to place of delivery in amounts determined by Customs officer at time of appraisement; divided by 1.40 or such other factor applied by Customs officer, to allow for Customs duties payable on imported dyestuffs	U.S. v. Geigy Chemical Corporation et al. (C.A.D. 1185)	New York Benzenoid dyestuffs

DECISION NUMBER	JUDGE & DATE OF DECISION	PLAINTIFF	COURT NO.	BASIS OF VALUATION	HELD VALUE	BASIS	PORT OF ENTRY AND MERCHANDISE
R81/70	Watson, J. February 18, 1981	Geigy Chemical Corporation	R70/1596	United States value	U.S. selling prices, less 1% cash discount as determined by Customs officer at time of appraisement; less 28.9% representing profit and general expenses usually made in the United States on sales of dyestuffs of same class or kind; less costs of transportation and insurance from place of shipment to place of delivery in amounts determined by Customs officer at time of appraisement; divided by 1.40 or such other factor applied by Customs officer, to allow for Customs duties payable on imported dyestuffs	U.S. v. Geigy Chemical Corporation et al. (C.A.D. 1155)	New York Benzenoid dyestuffs

R81/71	Watson, J. February 18, 1981	Ciba Chemical and Dye Company	R66/17041	United States value	U.S. selling prices, less 1% cash discount as determined by Customs officer at time of appraisement; less 25.5% representing profit and general expenses usually made in the United States on sales of dyestuffs of same class or kind; less costs of transportation and insurance from place of shipment to place of delivery in amounts determined by Customs officer at time of appraisement; divided by 1.40 or such other factor applied by Customs officer, to allow for Customs duties payable on imported dyestuffs	U.S. v. Geigy Chemical Corporation et al. (C.A.D. 1155)	New York Benzenoid dyestuffs

DECISION NUMBER	JUDGE & DATE OF DECISION	PLAINTIFF	COURT NO.	BASIS OF VALUATION	HELD VALUE	BASIS	PORT OF ENTRY AND MERCHANDISE
R81/72	Watson, J. February 19, 1981	Ciba Chemical and Dye Company	R66/19706	United States value	U.S. selling prices, less 1% cash discount as determined by Customs officer at time of appraisement; less 25.3% representing profit and general expenses usually made in the United States on sales of dyestuffs of same class or kind; less costs of transportation and insurance from place of shipment to place of delivery in amounts determined by Customs officer at time of appraisement; divided by 1.40 or such other factor applied by Customs officer, to allow for Customs duties payable on imported dyestuffs	U.S. v. Geigy Chemical Corporation et al. (C.A.D. 1155)	New York Benzenoid dyestuffs

R81/73	Watson, J. February 19, 1981	Ciba Chemical and Dye Company	R67/1562	United States value	U.S. selling prices, less 1% cash discount as determined by Customs officer at time of appraisement; less 25.7% representing profit and general expenses usually made in the United States on sales of dyestuffs of same class or kind; less costs of transportation and insurance from place of shipment to place of delivery in amounts determined by Customs officer at time of appraisement; divided by 1.40 or such other factor applied by Customs officer, to allow for Customs duties payable on imported dyestuffs	U.S. v. Geigy Chemical Corporation et al. (C.A.D. 1155)	New York Benzenoid dyestuffs

DECISION NUMBER	JUDGE & DATE OF DECISION	PLAINTIFF	COURT NO.	BASIS OF VALUATION	HELD VALUE	BASIS	PORT OF ENTRY AND MERCHANDISE
R81/74	Watson, J. February 19, 1981	Ciba Chemical and Dye Company	R67/15256	United States value	U.S. selling prices, less 1% cash discount as determined by Customs officer at time of appraisement; less 28.3% representing profit and general expenses usually made in the United States on sales of dyestuffs of same class or kind; less costs of transportation and insurance from place of shipment to place of delivery in amounts determined by Customs officer at time of appraisement, divided by 1.40 or such other factor applied by Customs officer, to allow for Customs duties payable on imported dyestuffs	U.S. v. Geigy Chemical Corporation et al. (C.A.D. 1155)	New York Benzenoid dyestuffs

R81/75	Watson, J. February 19, 1981	Geigy Chemical Corporation	R67/5357	United States value	U.S. selling prices, less 1% cash discount as determined by Customs officer at time of appraisement; less 28.3% representing profit and general expenses usually made in the United States on sales of dyestuffs of same class or kind; less costs of transportation and insurance from place of shipment to place of delivery in amounts determined by Customs officer at time of appraisement; divided by 1.40 or such other factor applied by Customs officer, to allow for Customs duties payable on imported dyestuffs	U.S. v. Geigy Chemical Corporation et al. (C.A.D. 1155)	New York Benzenoid dyestuffs

DECISION NUMBER	JUDGE & DATE OF DECISION	PLAINTIFF	COURT NO.	BASIS OF VALUATION	HELD VALUE	BASIS	PORT OF ENTRY AND MERCHANDISE
R81/76	Watson, J. February 19, 1981	Geigy Chemical Corporation	R67/14040	United States value	U.S. selling prices, less 1% cash discount as determined by Customs officer at time of appraisement; less 38.7% representing profit and general expenses usually made in the United States on sales of dyestuffs of same class or kind; less costs of transportation and insurance from place of shipment to place of delivery in amounts determined by Customs officer at time of appraisement, divided by 1.40 or such other factor applied by Customs officer, to allow for Customs duties payable on imported dyestuffs	U.S. v. Geigy Chemical Corporation et al. (C.A.D. 1155)	New York Benzenoid dyestuffs

R81/77	Watson, J. Februar; 19, 1981	Geigy Chemical Corporation	R68/799	United States value	U.S. selling prices, less 1% cash discount as determined by Customs officer at time of appraisement; less 38.7% representing profit and general expenses usually made in the United States on sales of dyestuffs of same class or kind; less costs of transportation and insurance from place of shipment to place of delivery in amounts determined by Customs officer at time of appraisement; divided by 1.40 or such other factor applied by Customs officer, to allow for Customs duties payable on imported dyestuffs	U.S. v. Geigy Chemical Corporation et al. (C.A.D. 1155)	New York Benzenoid dyestuffs

Appeal to United States Court of Customs and Patent Appeals

APPEAL 81–10.—Mount Washington Tanker, Co., A Subsidiary of Victory Carriers, Inc. *v.* The United States—SHIP REPAIRS—REPAIRS ON HIGH SEAS—DUTY ON COST OF FOREIGN REPAIRS—REMISSION OF DUTY—SUMMARY JUDGMENT.—Appeal from Slip Op. 80–8.

In this case, plaintiff-appellant seeks remission of duties assessed on repairs to its vessel, the T/S *Mount Washington*, a vessel documented under the laws of the United States. The vessel was engaged in transporting oil between various Pacific ports. The repairs, which consisted of overhauling the main generator, were not occasioned by stress of weather or other casualty at sea. In making the repairs, plaintiff-appellant hired a Swedish corporation who were flown from Sweden to the Philippines to join the vessel. These repairmen were on the T/S *Mount Washington* for about 1½ months, during most of which time the ship was on the high seas, except for brief periods when the ship put into the Ports of Subic Bay, Singapore, and Bahrein. The Swedish employees also performed repairs while the ship was at these ports. Upon completion of the work, the Swedish employees disembarked at the Port of Manila and were flown to Sweden. Upon the ship's return to the U.S. Port of Honolulu, the Customs Service assessed duty on the expenses of the repairs pursuant to 19 U.S.C. subsection 1466(a). Under that section, a duty of 50 percent is assessed on "the expense of repairs made in a foreign country upon a vessel documented under the laws of the United States to engage in foreign trade or coasting trade." In computing the duties, Customs included the cost of repairs performed in port, the cost of work performed at sea, and compensation paid to the repairmen for the time spent traveling between Sweden and the T/S *Mount Washington*.

Plaintiff-appellant claims that none of the repairs fall within the meaning of 19 U.S.C. subsection 1466(a); that any duty assessed should be limited to the cost of repairs actually performed while the ship was at port; that even if both the repairs performed at sea and in port are to be included in computing the dutiable expense, the travel compensation of the repair should not be included; that the U.S. Court of International Trade erred in denying plaintiff-appellant's

motion for summary judgment in part, and further erred in granting defendant-appellee's cross-motion for summary judgment in part. Plaintiff-appellant seeks review pursuant to the provisions of sections 1541(a), 2601(a), and 2601(b), of title 28, United States Code, and to that end requests the court to issue such orders and grant such relief as the statutes provide and to the court shall seem just.

International Trade Commission Notices

Investigations by the U.S. International Trade Commission

DEPARTMENT OF THE TREASURY, March 5, 1981.

The appended notices relating to investigations by the U.S. International Trade Commission are published for the information of Customs officers and others concerned.

R. E. CHASEN,
Commissioner of Customs.

In the Matter of CERTAIN INCLINED-FIELD ACCELERATION TUBES	Investigation No. 337–TA–67

Commission Order

INTRODUCTION

The Commission has carefully considered complainant High Voltage Engineering Corp.'s petition of January 13, 1981, for reconsideration of its determination. On February 18, 1981, the Commission voted to deny the request because it did not comply with the Commission rule requiring that any petition for reconsideration "be confined to new questions raised by the determination * * * upon which the petitioner had no opportunity to submit arguments." 19 CFR 210.56.

DISCUSSION

The petition raised four questions: (1) The intent of Congress in enacting the National Science Foundation Act of 1950, 42 U.S.C. 1861–1884; (2) the relative performance of spiral and other inclined-field acceleration tubes; and(3) complainant's ability and willingness to furnish spiral-field acceleration tubes; and (4) complainant's willingness to license users of imported spiral-field tubes under U.S. Letters Patent 3,308,323.

At the oral argument on November 25, 1980, there was a lengthy discussion of the role of the National Science Foundation in sponsoring nuclear-structure research and the effect that that sponsorship

would have on the Commission's determination. Transcript at 128–30, 160–61, 175–79. There was ample opportunity for the parties to supplement that discussion with a consideration of the National Science Foundation Act of 1950 in posthearing submissions.

Moreover, complainant misunderstands the way in which the act figured in the Commission's determination. The Commission opinion, "Certain Inclined-Field Acceleration Tubes," Investigation No. 337–TA–67, USITC publication No. 1119 (1980), cited the National Science Foundation Act as evidence that Congress considers basic scientific research to be important to the public health and welfare, not, as complainant alleged, as authority for overriding a patent owner's rights. The authority for overriding a patent owner's rights is subsection 337(d) of the Tariff Act of 1930, 19 U.S.C. 1337(d). As the petition pointed out, the National Science Foundation Act expressly does not authorize the Foundation to enter into contracts inconsistent with patent law. 42 U.S.C. 1871. The Commission is not convinced, however, that that provision must be read together with section 337. Furthermore, section 337 is to operate "in addition to any other provisions of law." 19 U.S.C. 1337(a).

As to the second issue, the petition raised no new question. The relative performance of the complainant's and respondent Dowlish Developments' tubes was addressed in public-interest submissions by users of both tubes, including two submissions supporting complainant's side of the case that were admitted to the record well after the deadline for submissions. Counsel for complainant was questioned by the Commission on the issue at oral argument.

Third, complainant's willingness to produce and furnish spiral-field acceleration tubes was raised by the Los Alamos Scientific Laboratory's submission of October 24, 1980, which was served on complainant. Complainant has had ample opportunity to address the issue and did so at oral argument, as was acknowledged in the Commission's opinion. USITC publication No. 1119 at 27.

Finally, complainant's willingness to license use of infringing articles was not material to the Commission's determination nor is it a new issue in the case. Complainant's petition points out that the issue was specifically raised by a Commissioner at oral argument and addressed by counsel for complainant. Petition at 19–20; transcript at 140–41. Parties were also afforded the opportunity to supplement oral argument with posthearing submissions.

ORDER

Accordingly, it is hereby ordered that—

1. Complainant's petition for reconsideration, motion docket No. 67–30 (Jan. 15, 1981), is denied;

2. The Secretary shall serve this order upon each party of

record in this investigation, and upon the U.S. Department of Health and Human Services, the U.S. Department of Justice, the Federal Trade Commission, and the U.S. Customs Service; and

3. The Secretary shall publish this order in the Federal Register;

By order of the Commission.

Issued: February 23, 1981.

KENNETH R. MASON,
Secretary.

In the Matter of CERTAIN AIRTIGHT CAST-IRON STOVES	Investigation No. 337–TA–69

Notice of Modification of Orders

AGENCY: U.S. International Trade Commission.

ACTION: Modification of cease and desist orders and exclusion order.

SUMMARY: On February 20, 1981, the Commission modified the exclusion order and cease and desist orders issued in this investigation after reconsidering those orders in light of the violations found to exist.

The Commission's action and order in this matter is available for public inspection in the Office of the Secretary, U.S. International Trade Commission, 701 E Street NW., Washington, D.C. 20436; telephone 202–523–0161.

FOR FURTHER INFORMATION CONTACT: Jeffrey Neeley, Esq., Office of the General Counsel, U.S. International Trade Commission, 701 E Street NW., Washington, D.C. 20436; telephone 202–523–0359.

By order of the Commission.

Issued: February 20, 1981.

KENNETH R. MASON,
Secretary.

Index

U.S. Customs Service

	T.D. No.
Treasury decisions:	
Carrier bond	81-41
Foreign currencies:	
Daily certified rates; February 16-20, 1981	81-43
Rates which varied from quarterly rate; February 16-20, 1981	81-44
Notice of proper format for bond for public gaugers	81-42
Synopses of drawback decisions	81-40
Soy flour, Hi Soy	81-40-A
Plywood siding, steel I-beams, floor covering, slide windows	81-40-B
Fabric, cotton	81-40-C
Integrated circuits and semiconductor devices	81-40-D
Pumps, plunger	81-40-E
Lubrication oil concentrates	81-40-F
Tweeters, midrange, speaker cabinets	81-40-G
Dialifor	81-40-H
Steel bars and zircaloy-4 channel blanks, stainless	81-40-I
Racks, boards, control cable etc.	81-40-J
Resins, synthetic	81-40-K
Tobacco, leaf, leaves or scrap	81-40-L
Gelatin	81-40-M
Engines, generators, cowl silencers	81-40-N
Engines and drum blowers	81-40-O
Audio equipment and windshield wiper motors	81-40-P
Electronic and electrical parts and assemblies, cabinets and misc. parts	81-40-Q
Seed, canary, mustard, and rapeseed	81-40-R
Seed, canary, mustard, and rapeseed	81-40-S
Typewriter parts	81-40-T
Electronic connector components	81-40-U
Steel sheet, hot rolled, and other steels in coil form	81-40-V
Motors, Yaskawa DC	81-40-W
Styluses, tone-arm	81-40-X
Attaché portfolio	81-40-Y
Door shins	81-40-Z

U.S. GOVERNMENT PRINTING OFFICE : 1981 O - 338-578

DEPARTMENT OF THE TREASURY
U.S. CUSTOMS SERVICE
WASHINGTON, D.C. 20229

OFFICIAL BUSINESS
PENALTY FOR PRIVATE USE, $300

POSTAGE AND FEES PAID
DEPARTMENT OF THE TREASURY (CUSTOMS)
(TREAS. 552)

U.S. MAIL

U.S. GOVERNMENT PRINTING OFFICE : 1981

15/12

Customs Bulletin

Regulations, Rulings, Decisions, and Notices concerning Customs and related matters

and Decisions

of the United States Court of Customs and Patent Appeals and the United States Court of International Trade

Vol. 15 MARCH 25, 1981 No. 12

NEWARK PUBLIC LIBRARY

APR 8 1981

U. S. GOVT. PUBS.
DEPOSITORY 376

This issue contains

T.D. 81–45 through 81–51
C.A.D. 1258
Slip Op. 81–16 through 81–20
Protest Abstracts P81/23 through P81/24
Reap. Abstracts R81/78
International Trade Commission Notices

THE DEPARTMENT OF THE TREASURY
U.S. Customs Service

T 1.11/3:

NOTICE

The abstracts, rulings, and notices which are issued weekly by the U.S. Customs Service are subject to correction for typographical or other printing errors. Users may notify the U.S. Customs Service, Logistics Management Division, Washington, D.C. 20229, of any such errors in order that corrections may be made before the bound volumes are published.

For sale by the Superintendent of Documents, U.S. Government Printing Office, Washington, D.C. 20402. Price: $2.25 (single copy domestic); $2.85 (single copy foreign). Subscription price: $85.00 a year domestic; $106.25 a year foreign.

U.S. Customs Service

Treasury Decisions

(T.D. 81–45)

Synopses of Drawback Decisions

The following are synopses of drawback rates issued April 23, 1980, to February 20, 1981, inclusive, pursuant to sections 22.1 through 22.5, inclusive, Customs Regulations.

In the synopses below are listed for each drawback rate approved under 19 U.S.C. 1313 (a) and (b), the name of the company, the specified articles on which drawback is authorized, the merchandise which will be used to manufacture or produce these articles, the factories where the work will be accomplished, the date the statement was signed, the basis for determining payment, the Regional Commissioner to whom the rate was forwarded, and the date on which it was forwarded.

Dated: March 4, 1981.

MARILYN G. MORRISON,
Director,
Carriers, Drawback and Bonds Division.

(A) Company: Allied Products Corp.
Section 1313(a) articles: Automobile and truck parts; agricultural implements, grain bins, and various other articles and parts thereof.
Section 1313(a) merchandise: Fasteners, castings, parts, and various other merchandise.
Section 1313(b) articles: Automobile and truck parts; agricultural implements, grain bins, and various other articles and parts thereof.
Section 1313(b) merchandise: Steel, various forms; rods, steel; wire; zincrometal; steel and aluminum tubing; aluminum; zinc; galvanized wire rope and cable; nickel powder; ferrous fasteners; numerous parts.
Factories: Various factories as listed in manufacturer's statement.
Statement signed: January 12, 1980.
Basis of claim: Used in, less valuable waste; and appearing in.

Rate forwarded to Regional Commissioner of Customs: New York, November 10, 1980.

(B) Company: American Motors Corp.
Section 1313(a) articles: Four-wheel-drive motor vehicles; parts, subassemblies, and assemblies thereof.
Section 1313(a) merchandise: Four-wheel-drive system componentry, subassemblies, assemblies and parts for four-wheel-drive motor vehicles.
Section 1313(b) articles: Four-wheel-drive motor vehicles; parts, subassemblies, and assemblies thereof.
Section 1313(b) merchandise: Four-wheel-drive system componentry, subassemblies, assemblies and parts for four-wheel-drive motor vehicles.
Factory: Kenosha, Wis.
Statement signed: June 19, 1980.
Basis of claim: Appearing in.
Rate forwarded to Regional Commissioner of Customs: Chicago, October 6, 1980.

(C) Company: Atari, Inc.
Section 1313(a) articles: Electronic video driving game (type F–1); consumer television games (home use).
Section 1313(a) merchandise: Electronic video driving game kit (type F–1); switchboard assemblies.
Section 1313(b) articles: Electronic coin-operated video games (arcade type); electronic coin-operated pinball games; consumer television games (home use).
Section 1313(b) merchandise: Television monitors; harnesses (wire assemblies); coindoor mechanisms; switchboard assemblies; radio frequency modules; semiconductor printed circuit boards, and satellite components.
Factories: Sunnyvale, Calif. (5).
Statement signed: September 7, 1979.
Basis of claim: Used in.
Rate forwarded to Regional Commissioner of Customs; San Francisco, August 25, 1980.

(D) Company: Boldemann Chocolate Co., Inc. (Division of Blommer Chocolate Co.)
Section 1313(a) articles: Milk chocolate coating.
Section 1313(a) merchandise: Chocolate crumbs.
Section 1313(b) articles: Milk chocolate coating; milk chocolate pokies; milk chocolate peanut pokies.
Section 1313(b) merchandise: Hard refined sugar.

Factory: Union City, Calif.
Statement signed: April 16, 1980.
Basis of claim: Used in.
Rate forwarded to Regional Commissioner of Customs: San Francisco, June 16, 1980.

(E) Company: Bose Corp.
Section 1313(a) articles: High fidelity loudspeaker systems, components, and accessories.
Section 1313(a) merchandise: Forged back plates; capstans; amplifier cases; receivers; turntables.
Section 1313(b) articles: High fidelity loudspeaker systems, components, and accessories.
Section 1313(b) merchandise: High fidelity loudspeaker parts.
Factories: Framingham, Mass. Toa Baja and Cidra, P.R.
Statement signed: October 6, 1980.
Basis of claim: Appearing in.
Rate issued by Regional Commissioner of Customs in accordance with section 22.4(o)(2): Boston, October 9, 1980.
Revokes: Unpublished headquarter's authorization letter dated September 25, 1980.

(F) Company: Carboline Co.
Section 1313(a) articles: Various chemical resistant coatings.
Section 1313(a) merchandise: Diglycidal ether Bisphenol F resins; ethyl silicate.
Section 1313(b) articles: Various chemical resistant coatings.
Section 1313(b) merchandise: Diglycidal ether Bisphenol F resins; ethyl silicate.
Factories: Xenia, Ohio; Lake Charles, La.; Hayward, Calif.
Statement signed: May 22, 1980.
Basis of claim: Used in.
Rate forwarded to Regional Commissioner of Customs: San Francisco, August 25, 1980.
Revokes: T.D. 79–84–D.

(G) Company: Fisons Inc.
Section 1313(a) articles: Ficam W (an insecticide).
Section 1313(a) merchandise: Arkopon T; Dyapol PT; Neosyl.
Section 1313(b) articles: Bendiocarb Technical; Ficam W (insecticides).
Section 1313(b) merchandise: Pyrogallol (designated); Pyrogallic acid (domestic); dimethoxypropane.
Factory: North Muskegon, Mich.
Statement signed: July 10, 1980.

Basis of claim: Used in.
Rate forwarded to Regional Commissioner of Customs: Boston, October 31, 1980.

(H) Company: G. F. Business Equipment, Inc.
Section 1313(a) articles: Chairs.
Section 1313(a) merchandise: Wooden seat bottoms and backs.
Section 1313(b) articles: Office furniture, accessories and parts thereof; agricultural and/or industrial tractor cabs.
Section 1313(b) merchandise: Hot rolled, cold rolled, and galvanized steel sheet, strips, and blanks.
Factories: Youngstown, Ohio; Sturgis, Mich.; Rochester, Minn.; Forest City, N.C.; Gallatin, Tenn.
Statement signed: May 30, 1980.
Basis of claim: Appearing in.
Rate forwarded to Regional Commissioner of Customs: New York, October 14, 1980.

(I) Company: Glen Raven Mills, Inc.
Section 1313(a) articles: 100 percent cotton finished army duck fabric.
Section 1313(a) merchandise: Greige piece goods.
Section 1313(b) articles: 100 percent cotton finished army duck fabric.
Section 1313(b) merchandise: Greige piece goods.
Factory: Glen Raven, N.C.
Statement signed: September 26, 1980.
Basis of claim: Appearing in.
Rate forwarded to Regional Commissioner of Customs: Miami, November 21, 1980.

(J) Company: Intel Corp.
Section 1313(a) articles: Integrated circuits in die and wafer form, partially fabricated; finished integrated circuits and semiconductor devices; finished systems and related equipment.
Section 1313(a) merchandise: High purity silicon wafers; packages (bases and window frames); frames; lids; integrated circuits and semiconductor devices, finished and unfinished.
Section 1313(b) articles: Integrated circuits in die and wafer form, partially fabricated; finished integrated circuits and semiconductor devices; finished systems; and related equipment.
Section 1313(b) merchandise: High purity silicon wafers; packages (bases and window frames); frames; lids; integrated circuits; and semiconductor devices; finished and unfinished.
Factories: Santa Clara (3), Sunnyvale, Mountain View, Santa Cruz, Livermore, Calif.; Aloha, Orego.; Chandler and Phoenix, Ariz.
Statement signed: February 6, 1980.

Basis of claim: Appearing in.
Rate forwarded to Regional Commissioner of Customs: San Francisco, May 28, 1980.

(K) Company: Interstab Chemicals Inc.
Section 1313(a) articles: Lead octoate.
Section 1313(a) merchandise: Iso nonanoic acid.
Section 1313(b) articles: Various chemical compounds, mixtures and blends.
Section 1313(b) merchandise: 2 ethyl hexoic acid; oleic acid; cadmium oxide; zinc oxide; dibutyltin oxide; barium hydroxide monohydrate; triphenyl phosphite; isooctyl thioglycolate; phenyl diisodecyl phosephite; epoxidized soybean oil; tributyltin oxide; diphenyl isooctyl phosphite.
Factory: New Brunswick, N.J.
Statement signed: December 6, 1979.
Basis of claim: Used in.
Rate forwarded to Regional Commissioner of Customs: New York, August 12, 1980.

(L) Company: J. I. Case Co., Drott Division.
Section 1313(a) articles: Traveling cranes, excavators, tree harvesters and handlers, industrial material handling machines, and parts thereof.
Section 1313(a) merchandise: Steel blanks and plate; castings; forgings; and numerous other parts identified by part number.
Section 1313(b) articles: Traveling cranes, excavators, tree harvesters and handlers, industrial material handling machines, and parts thereof.
Section 1313(b) merchandise: Steel plate and blanks; castings; forgings; and numerous other parts identified by part number.
Factory: Schofield, Wis.
Statement signed: May 21, 1980.
Basis of claim: Appearing in.
Rate forwarded to Regional Commissioner of Customs: New York, August 14, 1980.
Revokes: T.D. 72-282-E and unpublished amendment of June 25, 1975.

(M) Company: Labelon Corp.
Section 1313(a) articles: Projection transparencies.
Section 1313(a) merchandise: Polyester film.
Section 1313(b) articles: Projection transparencies.
Section 1313(b) merchandise: Polyester film.
Factory: Canandaigua, N.Y.

Statement signed: August 20, 1979.
Basis of claim: Used in.
Rate forwarded to Regional Commissioner of Customs: Boston, August 25, 1980.

(N) Company: Eli Lilly and Co.
Section 1313(a) articles: Vincristine sulfate in intermediate, bulk, and finished product formulations.
Section 1313(a) merchandise: Vincristine sulfate.
Section 1313(b) articles: Vincristine sulfate in intermediate, bulk and finished product formulations.
Section 1313(b) merchandise: Vincristine sulfate.
Factory: Indianapolis, Ind.
Statement signed: October 27, 1980.
Basis of claim: Used in.
Rate forwarded to Regional Commissioner of Customs: Chicago, February 20, 1981.
Revokes: T.D. 72–282–K.

(C) Company: Eli Lilly & Co.
Section 1313(a) articles: Flurandrenolide tape bulk; cream 9 Cordran; cream 11 Cordran; cream 12 Cordran; M–128 Cordran lotion; M–170 Cordran tape; ointment 79 Cordran; ointment 85 Cordran; ointment 86 Cordran; SM 170 bulk drenison tape.
Section 1313(a) merchandise: Flurandrenolide.
Section 1313(b) articles: Flurandrenolide tape bulk; cream 9 Cordran; cream 11 Cordran; cream 12 Cordran; M–128 Cordran lotion; M–170 Cordran tape; ointment 79 Cordran; ointment 85 Cordran; ointment 86 Cordran; SM 170 bulk drenison tape.
Section 1313(b) merchandise: Flurandrenolide.
Factories: Indianapolis, Ind.; Cottage Grove and St. Paul, Minn. Brookings, S.D.
State signed: June 4, 1980.
Basis of claim: Appearing in.
Rate forwarded to Regional Commissioner of Customs: Chicago, November 24, 1980.

(P) Company: The Lubrizol Corp.
Section 1313(a) articles: Basic calcium sulfonate; sulfonic acid; finished lubricant additives.
Section 1313(a) merchandise: Polyalkylbenzene.
Section 1313(b) articles: Basic calcium sulfonate; sulfonic acid; finished lubricant additives.
Section 1313(b) merchandise: Polyalkylbenzene; basic calcium sulfonate.

Factories: Painesville, Ohio; Deer Park and Pasadena, Tex.
Statement signed: June 13, 1980.
Basis of claim: Used in.
Rate forwarded to Regional Commissioner of Customs: Chicago, August 4, 1980.

(Q) Company: NAPP Systems (U.S.A.) Inc.
Section 1313(a) articles: Letterpress printing plates.
Section 1313(a) merchandise: Rosebengal; Kosin-GS; polyethylene glycol dimethacrylate; polyvinyl alcohol gohsenol.
Section 1313(b) articles: Letterpress printing plates.
Section 1313(b) merchandise: Electrolytic tin coil; aluminum coil, litho grade; 2-6-D1-tert-butyl-4 methylphenol; benzoin isopropyl ether; methylen BIS acrylamide; 2-hydroxyethyl methacrylate; polyvinyl alcohol (two types).
Factory: San Marcos, Calif.
Statement signed: March 6, 1980.
Basis of claim: Used in as to chemicals; used in, less valuable waste as to metals.
Rate forwarded to Regional Commissioner of Customs: San Francisco, November 6, 1980.

(R) Company: North East Shipping Corp.
Section 1313(a) articles: Electrolytic tinplate secondary and galvanized steel, slit and cut to size.
Section 1313(a) merchandise: Electrolytic tinplate secondary and galvanized steel in coils and sheets.
Section 1313(b) articles: Electrolytic tinplate secondary and galvanized steel, slit and cut to size.
Section 1313(b) merchandise: Electrolytic tinplate secondary and galvanized steel in coils and sheets.
Factories: Cucamonga and Alameda, Calif.; South Kearny, N.J.
Statement signed: March 5, 1980.
Basis of claim: Appearing in.
Rate forwarded to Regional Commissioner of Customs: San Francisco, October 8, 1980.

(S) Company: Otis Engineering Corp.
Section 1313(a) articles: Oilfield equipment and accessories.
Section 1313(a) merchandise: Hot and cold rolled plate, bar, tubing and angles; and monel bars.
Section 1313(b) articles: Oilfield equipment and accessories.
Section 1313(b) merchandise: Hot and cold rolled plate, bar, tubing and angles; and monel bars.
Factories: Carrollton, Graham, and Cisco, Tex.

Statement signed: August 18, 1980.
Basis of claim: Appearing in.
Rate forwarded to Regional Commissioner of Customs: Houston, August 25, 1980.

(T) Company: Pinole Point Steel Co.
Section 1313(a) articles: Galvanized steel in sheet or coil form.
Section 1313(a) merchandise: Cold rolled hard coiled sheet steel and high grade zinc with controlled lead.
Section 1313(b) articles: Galvanized steel in sheet or coil form.
Section 1313(b) merchandise: Cold rolled hard coiled sheet steel and high grade zinc with controlled lead.
Factory: Richmond, Calif.
Statement signed: October 25, 1979.
Basis of claim: Appearing in.
Rate forwarded to Regional Commissioner of Customs: San Francisco, October 14, 1980.

(U) Company: Simplex Wire & Cable Co.
Section 1313(a) articles: Submarine telephone cable.
Section 1313(a) merchandise: Galvanized steel armoring wire; bright steel strand wire.
Section 1313(b) articles: Submarine telephone cable.
Section 1313(b) merchandise: Galvanized steel armoring wire; high tensile bright steel stranded wire.
Factory: Newington, N.H.
Statement signed: November 20, 1980.
Basis of claim: Used in.
Rate forwarded to Regional Commissioner of Customs: Boston, February 3, 1981.

(V) Company: Toledo Pickling & Steel Service, Inc.
Section 1313(a) articles: Hot rolled, cold rolled, or galvanized steel, pickled, coated, and cut to specified sizes.
Section 1313(a) merchandise: Hot rolled, cold rolled, and galvanized steel sheet in coils.
Section 1313(b) articles: Hot rolled, cold rolled, or galvanized steel; pickled, coated, and cut to specified sizes.
Section 1313(b) merchandise: Hot rolled, cold rolled, and galvanized steel sheet in coils.
Factory: Toledo, Ohio.
Statement signed: July 9, 1980.
Basis of claim: Appearing in.
Rate forwarded to Regional Commissioners of Customs: New York and Chicago, November 19, 1980.
Revokes: T.D. 80–111–W.

(W) Company: Toshiba America, Inc., Manufacturing Division.
Section 1313(a) articles: Televisions, stereos, microwave ovens, copiers, refrigerators, calculators, other electronic articles.
Section 1313(a) merchandise: Magnatron tubes, television picture tubes, and various electronic parts and assemblies.
Section 1313(b) articles: Televisions, stereos, microwave ovens, copiers, refrigerators, calculators, other electronic articles.
Section 1313(b) merchandise: Magnatron tubes, television picture tubes, and various electronic parts and assemblies.
Factory: Lebanon, Tenn.
Statement signed: October 1, 1980.
Basis of claim: Used in.
Rate forwarded to Regional Commissioner of Customs: New York, January 13, 1981.

(X) Company: Waltham Watch Co.
Section 1313(a) articles: Various watches and watch heads.
Section 1313(a) merchandise: Various watch movements, cases, heads, and bracelets.
Section 1313(b) articles: Various watches and watch heads.
Section 1313(b) merchandise: Various watch movements, cases, heads, and bracelets.
Factories: Chicago, Ill.; Bridgeport, Conn.; Miami, Fla.
Statement signed: April 14, 1980.
Basis of claim: Appearing in.
Rate issued by Regional Commissioner of Customs in accordance with section 22.4(o)(2): Chicago, April 23, 1980.
Revokes: T.D. 80–94–X.

(Y) Company: Westinghouse Electric Corp.
Section 1313(a) articles: Combustion gas turbines assemblies.
Section 1313(a) merchandise: Blade ring casting (base and cover); exhaust cylinder (base and cover); blade ring/turbine cylinder (base and cover); outer inlet casings (base and cover); inner inlet casings (base and cover) (all foregoing rough machined); struts, inlet casing castings; compressor-combustor cylinders (base and cover) fabrications.
Section 1313(b) articles: Combustion gas turbines assemblies.
Section 1313(b) merchandise: Semifinished gas turbine components.
Factory: Philadelphia, Pa.
Statement signed: July 23, 1979.
Basis of claim: Used in, less valuable waste.
Rate forwarded to Regional Commissioner of Customs: New York, July 17, 1980.
Revokes: T.D. 79–84–X.

(Z) Company: Weyerhaeuser Co.
Section 1313(a) articles: Kraft linerboard.
Section 1313(a) merchandise: Retamyl; Retamyl MP.
Section 1313(b) articles: Kraft linerboard.
Section 1313(b) merchandise: Posamyl-E; Posamyl E–7; Posamyl-C.
Factory: Springfield, Oreg.
Statement signed: August 15, 1980.
Basis of claim: Used in.
Rate forwarded to Regional Commissioner of Customs: San Francisco, October 6, 1980.

(T.D. 81–46)

Bonds

Approval of carrier's bond, customs form 3587; amendment to T.D. 80–242

T.D. 80–242 relating to the temporary approval of the carrier's bond of the following principal is hereby amended as necessary to show that such bond has been permanently approved as noted below.

Dated: March 5, 1981.

Principal:

	Effective date of permanent authority
Norwood Transport, Inc., division of Nettleton Enterprises Co., Inc.	Jan. 7, 1981.

MARILYN G. MORRISON,
Director,
Carriers, Drawback and Bonds Division.

(T.D. 81–47)

Bonds

Approval and discontinuance of carrier's bonds, Customs form 3587

Bonds of carriers for the transportation of bonded merchandise have been approved or discontinued as shown below. The symbol "D" indicates that the bond previously outstanding has been discontinued on the month, day, and year represented by the figures which follow. "PB" refers to a previous bond, dated as represented by figures in parentheses immediately following, which has been discontinued. If the previous bond was in the name of a different company or if the surety was different, the information is shown in a footnote at the end of the list.

Dated: March 6, 1981.

Name of principal and surety	Date of bond	Date of approval	Filed with district director/area director/amount
Advance Air Freight, Inc., P.O. Box 2291, Nashville, TN; freight forwarder; Fireman's Fund Ins. Co.	Feb. 2, 1981	Feb. 9, 1981	New Orleans, LA; $50,000
B & P Motor Express Co., 825 W. Federal St., Youngstown, OH; motor carrier; Commercial Union Ins. Co.	Feb. 10, 1981	Feb. 12, 1981	Baltimore, MD; $25,000
Compania Poncena de Transporte, Inc., P.O. Box 135, Mercedita, PR; motor carrier; New Hampshire Ins. Co.	Oct. 24, 1980	Nov. 20, 1980	San Juan, PR; $25,000
Courier-Newsom Express, Inc., 2505 National Rd., P.O. Box 509, Columbus, IN; motor carrier; St. Paul Fire & Marine Ins. Co. D 2/4/81	Mar. 1, 1969	June 2, 1969	Cleveland, OH; $30,000
D & S Freight Service, Inc., 524 C St., Boston, MA; motor carrier; Federal Ins. Co. D 10/21/80	June 24, 1972	June 24, 1972	Boston, MA; $50,000
Daily Express, Inc., 1076 Harrisburg Pike, Carlisle, PA; motor carrier; Washington International Ins. Co.[1] (PB 4/20/77) D 2/5/81	Jan. 22, 1981	Feb. 5, 1981	Baltimore, MD; $50,000
GSC Transport, Inc., 160 National Road, Edison, NJ; motor carrier; Investors Ins. Co. of America	Feb. 5, 1981	Feb. 11, 1981	Newark, NJ; $50,000
Indianhead Truck Line, Inc., 1947 W. County Road C, St. Paul, MN; motor carrier; Ins. Co. of North America (PB 10/4/78) D 12/16/80 [2]	Oct. 4, 1980	Dec. 17, 1980	Minneapolis, MN; $35,000
Inland Express, Inc., P.O. Box 73, Marlboro, MA; motor carrier; Hartford Accident & Indemnity Co. D 11/16/80	Sept. 13, 1967	Nov. 1, 1967	Boston, MA; $50,000
Los Angeles-Yuma Freight Lines, Inc., P.O. Box 4460, Yuma, AZ; motor carrier; Peerless Ins. Co. (PB 1/17/73) D 2/11/81 [3]	Jan. 15, 1981	Feb. 11, 1981	Nogales, AZ; $25,000
B. J. McAdams, Inc., Rt. 6, Box 15, North Little Rock, AR; motor carrier; Reliance Ins. Co. D 3/17/81	Nov. 21, 1978	Nov. 30, 1978	Nogales, AZ; $25,000
McLaurin Trucking Co., P.O. Box 26506, Charlotte, NC; motor carrier; U.S. Fidelity & Guaranty Co.	Feb. 3, 1981	Feb. 19, 1981	Wilmington, NC; $25,000
Maislin Transport, Ltd., Maislin Transport of Delaware, Inc., and Port Express Int'l. Inc., 530 Totem Rd., Bensalem Twp., Bucks County, PA; motor carrier; The Aetna Casualty & Surety Co. (PB 10/25/79) D 2/20/81 [4]	Dec. 17, 1980	Feb. 21, 1981	Phila, PA; $150,000
Mattan Transport, Inc., 363 Arvin Ave., Stoney Creek, Ontario, Canada; motor carrier; Old Republic Ins. Co.	Feb. 6, 1981	Feb. 9, 1981	Detroit, MI; $50,000
Neptune World Wide Moving, Inc., 55 Weyman Ave., New Rochelle, NY; motor carrier; Ins. Co. of North America	Jan. 5, 1981	Feb. 9, 1981	New York Seaport; $50,000

See footnotes at end of table.

338-579 O - 81 - 2

Name of principal and surety	Date of bond	Date of approval	Filed with district director/area director/amount
Pan American Van Lines, Inc., 18420 S. Santa Fe Avenue, Long Beach, CA; motor carrier; The Continental Ins. Co. (PB 1/5/77) D 1/19/81 [6]	Jan. 5, 1981	Jan. 20, 1981	Los Angeles, CA; $50,000
Port Express Int'l Inc. (See Maislin Transport, Ltd.)			
Regency Motor Freight Inc., 26600 Van Born Rd., Dearborn Heights, MI; motor carrier; Continental Casualty Co. D 2/10/81	Feb. 14, 1980	May 9, 1980	Milwaukee, WI; $25,000
Reliable Transport (U.S.) Ltd., 64 Mackinaw St., Buffalo, NY; motor carrier; The Continental Ins. Co. D 2/6/81	Feb. 6, 1980	Mar. 28, 1980	Buffalo, NY; $25,000
Reliance Motor Express, Inc., 28 Fitchburg St., Somerville, MA; motor carrier; Liberty Mutual Ins. Co. (PB 9/5/79) D 2/2/81 [6]	Nov. 25, 1980	Feb. 2, 1981	Boston, MA; $50,000
Smith Transport (International) Ltd., 150 Commissioners St., Toronto 249, Ontario, Canada; motor carrier; United States Fidelity & Guaranty Co. D 2/17/81	Sept. 7, 1972	Sept. 26, 1972	Detroit, MI; $50,000
Floyd Smith Jr. Trucking, Inc., P.O. Box 816, Meridian, Idaho; motor carrier; Mid-Century Ins. Co. D 2/2/81	Aug. 17, 1979	Oct. 17, 1979	Great Falls, MT; $25,000
West Coast Truck Lines, Inc., 85647 Highway 99 South, Eugene, OR; motor carrier; Fireman's Fund Ins. Co. (PB 3/11/74) D 2/17/81 [7]	Feb. 2, 1981	Feb. 17, 1981	Portland, OR; $25,000

[1] Surety is Protective Ins. Co.
[2] Surety is Great American Ins. Co.
[3] Surety is Transport Indemnity Co.
[4] Surety is Globe Indemnity Co.
[5] Surety is Peerless Ins. Co.
[6] Surety is The Hanover Ins. Co.
[7] Surety is Oregon Automobile Ins. Co.

(BON–3–03)

GEORGE C. STEUART
(For Marilyn G. Morrison, Director,
Carriers, Drawback and Bonds Division).

(T.D. 81–48)

Notice of Recordation of Trade Name American Machine & Tool Co., Inc.

On November 13, 1980, there was published in the Federal Register (45 F.R. 75046) a notice of application for the recordation under sec-

tion 42 of the act of July 5, 1946, as amended (15 U.S.C. 1124), of the trade name American Machine & Tool Co., Inc. The notice advised that prior to final action on the application, filed pursuant to section 133.12, Customs Regulations (19 CFR 133.12), consideration would be given to relevant data, views, or arguments submitted in opposition to the recordation and received not later than 30 days from the date of publication of the notice. No responses were received in opposition to the application.

The name American Machine & Tool Co., Inc. is hereby recorded as the trade name of American Machine & Tool Co., Inc., a corporation organized under the laws of the State of Pennsylvania, located at Fourth Avenue and Spring Street, Royersford, Pa. 19468, when applied to power tools, manufactured in the United States.

Dated: March 9, 1981.

A. L. PIAZZA
(For Salvatore E. Caramagno, Acting Director,
Entry Procedures and Penalties Division).

(T.D. 81–49)

Bonds

Approval to use authorized facsimile signatures and seals; T.D. 79–241 amended

The use of facsimile signatures and seals by the following corporate surety has been approved effective March 10, 1981. The corporate surety has provided the Customs Service with a copy of each signature that is to be used, a copy of the corporate seal, and a certified copy of the corporate resolution agreeing to be bound by the facsimile signatures and seal. This approval is without prejudice to the surety's right to affix signatures and seals manually.

Peerless Insurance Co., Keene, N.H., authorized facsimile signatures on file for:

Charles J. Scibetti, attorney-in-fact, witness.
Theresa Scibetti,[1] attorney-in-fact, witness.
Joan Zagami,[1] attorney-in-fact, witness.

MARILYN G. MORRISON,
Director,
Carriers, Drawback and Bonds Division.

---

[1] Approval as attorney-in-fact conditional upon filing of corporate surety power of attorney, CF 5297, issued by Peerless Insurance Co.

(T.D. 81-50)

Foreign Currencies—Daily Rates for Countries Not on Quarterly List

Rates of exchange based on rates certified to the Secretary of the Treasury by the Federal Reserve Bank of New York for the Brazil cruzeiro, Peoples' Republic of China yuan, Hong Kong dollar, Iran rial, Philippines peso, Singapore dollar, Thailand baht (tical), and Venezuela bolivar

The Federal Reserve Bank of New York, pursuant to section 522(c), Tariff Act of 1930, as amended (31 U.S.C. 372(c)), has certified buying rates for the dates and foreign currencies shown below. The rates of exchange, based on these buying rates, are published for the information and use of Customs officers and others concerned pursuant to part 159, subpart C, Customs Regulations (19 CFR 159, subpart C).

Brazil cruzeiro:	
February 23–27, 1981	$0.0139
People's Republic of China yuan:	
February 23, 1981	$0.628575
February 24, 1981	.621157
February 25, 1981	.623636
February 26–27, 1981	.618085
Hong Kong dollar:	
February 23, 1981	$0.189233
February 24–25, 1981	.189072
February 26, 1981	.188555
February 27, 1981	.199402
Iran rial:	
February 23–27, 1981	Not available
Philippines peso:	
February 23–27, 1981	$0.1305
Singapore dollar:	
February 23, 1981	$0.478011
February 24, 1981	.476872
February 25, 1981	.476531
February 26, 1981	.477099
February 27, 1981	.475511
Thailand baht (tical):	
February 23–26, 1981	$0.0484
February 27, 1981	.0485
Venezuela bolivar:	
February 23–27, 1981	$0.2329

(LIQ-03-01 O:C:E)

Dated: February 27, 1981.

GWENN KLEIN KIRSCHNER,
Acting Chief.

(T.D. 81-51)

Foreign Currencies—Variances From Quarterly Rate

The following rates of exchange are based upon rates certified to the Secretary of the Treasury by the Federal Reserve Bank of New York, pursuant to Section 522(c), Tariff Act of 1930, as amended (31 U.S.C. 372(c)), and reflect variances of 5 per centum or more from the quarterly rate published in T.D. 81-13 for the following countries. Therefore, as to entries covering merchandise exported on the dates listed, whenever it is necessary for Customs purposes to convert such currency into currency of the United States, conversion shall be at the following rates.

Austria schilling:	
February 23, 1981	$0.067092
February 24, 1981	.067047
February 25, 1981	.067069
February 26, 1981	.066622
February 27, 1981	.066225
Belgium franc:	
February 23, 1981	$0.029197
February 24, 1981	.029112
February 25, 1981	.029095
February 26, 1981	.028860
February 27, 1981	.028694
Denmark krone:	
February 23, 1981	$0.152964
February 24, 1981	.152555
February 25, 1981	.151745
February 26, 1981	.150943
February 27, 1981	.150376
Finland markka:	
February 24, 1981	$0.246305
February 25-26, 1981	Quarterly
February 27, 1981	.245098
France franc:	
February 23, 1981	$0.203046
February 24, 1981	.201309
February 25, 1981	.201776
February 26, 1981	.200763
February 27, 1981	.199402
Germany deutsche mark:	
February 23, 1981	$0.473485
February 24, 1981	.472590
February 25, 1981	.474608
February 26, 1981	.472590
February 27, 1981	.469263

India rupee:	
February 24, 1981	$0.1203
February 25, 1981	.1200
February 26, 1981	.1202
February 27, 1981	.1200
Ireland pound:	
February 23, 1981	$1.7480
February 24, 1981	1.7380
February 25, 1981	1.7375
February 26, 1981	1.7350
February 27, 1981	1.7150
Italy lira:	
February 23, 1981	$0.000987
February 24, 1981	.000983
February 25, 1981	.000984
February 26, 1981	.000978
February 27, 1981	.000975
Netherlands guilder:	
February 23, 1981	$0.432620
February 24, 1981	.428266
February 25, 1981	.429738
February 26, 1981	.426894
February 27, 1981	.425170
Portugal escudo:	
February 23, 1981	$0.017746
February 24, 1981	Quarterly
February 25, 1981	.017778
February 26, 1981	.017590
February 27, 1981	.017452
Spain peseta:	
February 23, 1981	$0.011689
February 24, 1981	.011662
February 25, 1981	.011635
February 26, 1981	.011553
February 27, 1981	.011514
Sri Lanka rupee:	
February 23–26, 1981	$0.055991
February 27, 1981	.055710
Sweden krone:	
February 27, 1981	$0.215517
Switzerland franc:	
February 23, 1981	$0.525624
February 24, 1981	.521105
February 25, 1981	.521785
February 26, 1981	.513347
February 27, 1981	.509684

United Kingdom pound:	
February 23, 1981	$2.2440
February 24, 1981	2.2330
February 25, 1981	2.2280
February 26, 1981	2.2265
February 27, 1981	2.2040

(LIQ-03-01 O:C:C)

Dated: February 27, 1981.

GWENN KLEIN KIRSCHNER,
Acting Chief.

Decisions of the United States Court of Customs and Patent Appeals

(C.A.D. 1258)

THE UNITED STATES *v.* SANYO ELECTRIC INC., No. 80–34

1. CLASSIFICATION OF IMPORTS—ELECTRICAL ARTICLES

Judgment of the U.S. Court of International Trade that the imported power failure lights were incorrectly classified as "flashlights" and should be classified as "[e]lectrical articles * * * not specifically provided for" is affirmed.

U.S. Court of Customs and Patent Appeals, March 5, 1981

Appeal from U.S. Customs Court, C.A.D. No. 1258

[Affirmed.]

Alice Daniel, Assistant Attorney General, *David M. Cohen*, Director, *Joseph I. Liebman*, Attorney in Charge, *Susan Handler-Menahem*, of counsel, for appellant. *Peter Jay Baskin, Gail T. Cumins*, attorneys for appellee.

[Oral argument on February 2, 1981 by Susan Handler-Menahem for appellant and Peter Jay Baskin for appellee.]

Before MARKEY, *Chief Judge*, RICH, BALDWIN, MILLER, and NIES, *Associate Judges*.

BALDWIN, Judge.

This is an appeal from the judgment of the U.S. Customs Court (now the U.S. Court of International Trade), 83 Cust. Ct. ——, C.D. 4855, 496 F. Supp. 1311 (1980), sustaining the appellee's claim that the imported merchandise in issue, known as a power failure light, was improperly classified as a flashlight under item 683.70 of the Tariff Schedules of the United States (TSUS) and was correctly

classifiable as electrical articles, not specifically provided for, under item 688.40.[1] We affirm.

OPINION

[1] We agree with the holding of the Court of International Trade that the imported power failure lights were incorrectly classified as "flashlights" and should be classified as "[e]lectrical articles * * * not specifically provided for." Accordingly, we affirm the judgment of the court and adopt the court's opinion as our own.

---

[1] The relevant TSUS provisions are as follows:

	[Classified under:]	
	Portable electric lamps with self-contained electrical source, and parts thereof:	
683.70	Flashlights and parts thereof	35% ad val.
	[Claimed under:]	
688.40	Electrical articles, and electrical parts of articles, not specifically provided for	5.5% ad val.

United States Court of International Trade

One Federal Plaza
New York, N.Y. 10007

Chief Judge

Edward D. Re

Judges

Paul P. Rao
Morgan Ford
Scovel Richardson
Fredrick Landis
James L. Watson
Herbert N. Maletz
Bernard Newman
Nils A. Boe

Senior Judge

Samuel M. Rosenstein

Clerk

Joseph E. Lombardi

Decision of the United States Court of International Trade

(Slip Op. 81–16)

MIRACLE EXCLUSIVES, INC., PLAINTIFF *v.* UNITED STATES, DEFENDANT

Court No. 75–12–03317

Germination Trays—Horticultural Implements

Certain germination tray sets used to sprout seeds in water and consisting of three trays, syphon caps, a catch basin, and a lid, composed of plastic, were classified for duty purposes under item 772.15, TSUS, held, said merchandise to be entitled to entry free of duty under item 666.00, TSUS, as horticultural implements.

In addition to the testimony relating to sole and, therefore, chief use of the imported merchandise as sprouting trays, it is well established that a sample is a potent witness on the question of chief use and may permit a finding of primary or chief use when in harmony with other evidence of record. *Oxford International Corp.* v. *United States*, 70 Cust. Ct. 217, C.D. 4433 (1973); *Wilson's Customs Clearance, Inc.* v. *United States*, 59 Cust. Ct. 36, C.D. 3061 (1967); *Fred Bronner Corp.* v. *United States*, 57 Cust. Ct. 428, C.D. 2832 (1966).

Where the classified provision encompasses more than one category of merchandise and no specific classification is set forth, no presumption of correctness attaches.

Item 666.00, TSUS, has been determined to be a chief use provision. Accordingly, defendant's alternative claim of actual use in accordance with General Interpretative Rule 10(e)(ii) is not applicable.

The provision for horticultural implements first appeared in the Tariff Schedules of the United States and was, according to the "Tariff Classification Study," included to correct past confusion and anomalous results.

[Judgment for plaintiff.]

(Decided February 24, 1981)

Freeman, Meade, Wasserman & Schneider (*Kenneth N. Wolf* at the trial; *Louis Schneider* and *Angela Pitsaris* with him on the briefs) for the plaintiff.

Thomas S. Martin, Acting Assistant Attorney General, *Joseph I. Liebman*, Attorney in Charge, International Trade Field Office, Commercial Litigation Branch (*Susan Handler-Menahem* at the trial and on the brief), for the defendant.

FORD, Judge:

This action involves the proper classification for duty purposes of certain germination trays known as Biosnacky or Biosta sprouters, which are manufactured in Switzerland and Canada. It is not disputed by counsel for the respective parties that the imported merchandise is used with water for the purpose of sprouting seeds, which are subsequently eaten.

The merchandise was classified under item 772.15, TSUS, and assessed with duty at 11.5 per centum ad valorem or 8.5 per centum ad valorem, depending upon the date of entry. The statutory language covering the classification is as follows:

> Articles chiefly used for preparing, serving, or storing food or beverages, or food or beverage ingredients; and household articles not specially provided for; all the foregoing of rubber or plastics:
>
> * * * * * * *

772.15 Other..... * * *

Plaintiff claims the importations are entitled to entry free of duty under item 666.00, TSUS, which, together with the pertinent headnote, provides as follows:

Schedule 6, part 4, subpart C:

Subpart C headnote:

1. The provisions of item 666.00 for "agricultural and horticultural implements not specially provided for" do not apply to any of the articles provided for in schedule 6, part 2, part 3 (subparts A through F, inclusive), part 5 (except item 688.40), or part 6, or to any of the articles specially provided for elsewhere in the tariff schedules, but interchangeable agricultural and horticultural implements are classifiable in item 666.00 even if mounted at the time of importation on a tractor provided for in part 6B of this schedule.

666.00 * * * agricultural and horticultural implements not specially provided for, * * *.

The record consists of the testimony of two witnesses called on behalf of plaintiff and eight exhibits (exhibit 3 having been withdrawn), as well as the official papers which were received in evidence without being marked.

Mr. Ernest Brunswick, president of plaintiff corporation, testified that he is familiar with both the Biosnacky and Biosta sprouters, having bought and sold them. Both items are identical except for the name and color. Exhibit 1 was offered and received in evidence as representative of the Biosnacky merchandise, and exhibit 2 is representative of the Biosta merchandise. Each exhibit, composed of plastic, consists of the three sprouting trays, a catch basin, a lid, three syphon caps, and instructions.

Mr. Brunswick testified that exhibit 3 consisted of a sprouter containing 3- or 4-day-old sprouts. Exhibit 3 was subsequently withdrawn and replaced with photographs, which were received as exhibits 4 and 5. The top two layers of exhibit 3 are alfalfa and the bottom is a salad mixture consisting of adzuki beans, soy beans, etc. The witness explained the use of the sprouters as follows:

Question. How did the sprouts get there?

Answer. Well, this explains the usage of the product. You put a teaspoon or so, a thin layer of seeds into each tray. You can use the same seed or three different kinds. You fill the top tray with water, and by means of the syphon action of these little red caps, the water will syphon slowly from one tray to another and finally collect in the bottom. Just sufficient water will be retained in these ridges to keep enough—just enough moisture and not too much for the seeds to grow in. The small seeds you will water again on the fourth day. The large seeds you

> can water every day. As soon as the water collects in the bottom tray, you discard it. The cover there is to keep the moisture in. The air vents on each side is so it won't mold, gets ventilation. And, in about 5 days, 5 to 6 days, it goes up to the top. [R. 15–16].

Exhibits 6, 7, and 8 consist of advertisements placed by plaintiff in various magazines. The witness testified that he sold the sprouters nationwide to consumers, distributors, retailers, seed houses, and universities. Mr. Brunswick traveled throughout the country attending both national and regional shows of the health food industry showing a growing sprouter and distributing posters and leaflets. He never attended shows directed to farmers. The witness testified the imported sprouters involve soilless growth of seeds by the addition of tap water with no addition of nutrients or fertilizer as is set forth in the definition of hydroponics. Tap water should be used in the sprouter since it contains nutrients, whereas distilled water has the minerals removed. Mr. Brunswick was of the opinion that less than 10 percent of his sales were to universities and 20 percent of his sales were to seed companies. The predominant use is in the home. Mr. Brunswick knows of no other use for the sprouters other than to sprout seeds in water as set forth in the instructions.

Mr. Marvin Olinsky, a horticulturist presently employed by Premiere Brands, Inc., was next called on behalf of plaintiff. Mr. Olinsky, prior to his present employment, was assistant director for horticulture and the first curator/director of the new conservatory at the New York Botanical Gardens. Prior to this employment, he was county agent for Rutgers University and Cornell University. Mr. Olinksy has a degree in horticulture from Delaware Valley College and a masters degree from Lehigh University. He has written professional articles in the field of agriculture and horticulture and currently writes a weekly column. Mr. Olinsky was one of several authors for the American Garden Book and served as a consultant to Time-Life Books. In addition, the witness has lectured in the field of agriculture and horticulture and has appeared on television and radio. Exhibit 9 is a résumé of the background of Mr. Olinsky.

According to the witness, horticulture is one part of the science of agriculture, and germination or sprouting is an agricultural or horticultural pursuit.

Mr. Olinsky then testified that a seed is a byproduct of the union of the pollen representing the sperm and an ovule. The endosperm which surrounds the embryo within the seed serves as a source of food. Germination results when the seed coat absorbs water and softens and permits the embryo to expand from the bottom as a primary root and from the top as a plant. The witness testified that ordinary tap water can be utilized to germinate a seed, but that controlled amounts of water are of primary concern.

338-579 O - 81 - 3

The witness stated that hydroponics is the growing of plant material in a water nutrient solution void of organic matter and soil, and that in his opinion hydroponics is both an agricultural and horticultural pursuit. Mr. Olinsky testified that he personally used the Biosnacky or Biosta germination trays for the purpose of sprouting the alfalfa seeds which he ate for breakfast that morning. The sprouted seeds were eaten whole and raw. The witness testified that he followed the instructions contained in the imported merchandise, placing seeds in the trays and adding water. Within approximately 5 days he had sprouts for his salad. In his opinion the germination process he observed in the Biosnacky was a hydroponic process.

On cross-examination Mr. Olinsky testified that in the course of his training and work he became familiar with hydroponics used commercially around the country. The witness stated that in the commercial use of hydroponics the use of nutrients and some manner of support for the plant is of great importance. In the opinion of the witness, hydroponically grown fruits and vegetables would amount to less than 10 percent of the production.

The undisputed evidence of record establishes that, at or about the time of importation, the imported merchandise was solely used as a sprouter for the germination of seeds in a soilless medium. Whether this constitutes hydroponics is one of the points of contention between the parties. Counsel for defendant has quoted a number of definitions which provide for the growing of plants with "liquid nutrient solutions" [1] or "in a solution containing certain necessary mineral salts or rooted in a sand medium".[2] While these definitions might be applicable to the commercial production of plants by hydroponics, the testimony of the botanist witness, Olinsky, makes it evident that such nutrient solutions are not necessary for sprouting seeds. The fact of the matter is that exhibit 3 (which was withdrawn and substituted with photographs received as exhibits 4 and 5) was presented to the court as an established fact, that seeds could be sprouted in the imported merchandise in tap water. No additional nutrient solution or support medium was used. This is a perfect example of the principle of law, utilized in this field of jurisprudence, that a sample often speaks for itself.

In addition to the testimony relating to sole and, therefore, chief use of the imported merchandise as sprouting trays, it is well established that a sample is a potent witness on the question of chief use and may permit a finding of primary or chief use when in harmony with other evidence of record. *Oxford International Corp.* v. *United States*,

[1] A Dictionary of Agricultural and Allied Terminology (1962).
[2] Van Nostrand's Scientific Encyclopedia (1968), p. 875.

best copy available

70 Cust. Ct. 217, C.D. 4433 (1973); *Wilson's Customs Clearance, Inc.* v. *United States*, 59 Cust. Ct. 36, C.D. 3061 (1967); *Fred Bronner Corp.* v. *United States*, 57 Cust. Ct. 428, C.D. 2832 (1966). The court is of the opinion that the chief use of the class or kind of article involved is for the cultivation of edible sprouts from seeds in a soilless medium.

Plaintiff in its reply brief presented the question of the applicability of the presumption of correctness in view of defendant's reliance on the entire provision of 772.15, supra. Defendant contends the merchandise falls within the common meaning of several portions of 772.15, supra, and, therefore, the presumption of correctness should attach to the classification under the entire provision of 772.15, supra. When merchandise is classified under one portion of a tariff provision and the Government alternatively claims for classification under another portion of the same tariff provision, the courts have held the presumption of correctness does not attach to the distinctly different article of merchandise covered by the alternative claim. *See United States* v. *White Sulphur Springs Co.*, 21 CCPA 203, T.D. 46728; *Broadway-Hale Stores, Inc.* v. *United States*, 63 Cust. Ct. 194, C.D. 3896 (1969).

In a classification such as in the case at bar, wherein the classified provision encompasses more than one category of merchandise and no specific classification is set forth, no presumption of correctness attaches. In *International Seaway Trading Corp.* v. *United States*, 81 Cust. Ct. 92, C.D. 4773, 464 F. Supp. 380 (1978), the court made the following comment:

> If defendant contends that the presumption attaches to the alternative categories of rubber and plastics, then the presumption of correctness attaches to neither of those categories. *United States* v. *White Sulphur Springs Co.*, 21 CCPA 203, T.D. 46728 (1933); *Arthur J. Humphreys* v. *United States*, 66 Cust. Ct. 24, C.D. 4163 (1971); *Domestic Marble & Stone Co.* v. *United States*, 64 Cust. Ct. 360, C.D. 4003 (1970); *Broadway-Hale Stores, Inc.* v. *United States*, 63 Cust. Ct. 194, C.D. 3896 (1969); *Gallagher & Ascher Co.* v. *United States*, 39 Cust. Ct. 1, C.D. 1892 (1957); *S.S. Kresge Co.* v. *United States*, 25 Cust. Ct. 89, C.D. 1269 1950); *Sterling Button Co.* v. *United States*, 4 Cust. Ct. 213, C.D. 324 (1940). Under these decisions, it is clear that defendant cannot contend that its classification is based upon the conclusion that merchandise fell within more than one category of merchandise even if the separate categories fall within the same paragraph or item number. The failure to apprise the importer under which category the merchandise was classified, if the admissions have not already done so, will result in the presumption of correctness attaching to none of those categories. [Pp. 104–105.]

Accordingly, no presumption of correctness attaches to the classification in the instant case. Item 666.00, supra, has been held to be a chief use provision. *Border Brokerage Company, Inc.* v. *United States*,

65 Cust. Ct. 277, C.D. 4089, 343 F. Supp. 1396 (1970), aff'd, 59 CCPA 151, C.A.D. 1058, 461 F. 2d 1383 (1972). General Interpretative Rule 10(e)(i) sets forth guidance for the determination of chief use. Defendant, in its brief, urges alternatively that if item 666.00, supra, was determined to be an actual use provision, then plaintiff has failed to comply with General Interpretative Rule 10(e)(ii). As indicated, supra, item 666.00 has heretofore been held to be a chief use provision and the court adheres to such finding.

The court notes that headnote 1, subpart c, part 4 of schedule 6 states "[t]he provisions of item 666.00 for 'agricultural and horticultural implements not specially provided for' do not apply * * * to any of the articles specially provided for elsewhere in the tariff schedules * * *." Plaintiff has established to the satisfaction of the court that the imported merchandise is not provided for in item 772.15, supra, under which Customs classified the merchandise. Additionally it is noted in the "Summaries of Trade and Tariff Information," schedule 7, volume 7 (1968) that it does not appear to cover merchandise of the class or kind involved. At pages 68–69 the following summation is made:

> As is shown in table 3, somewhat more than 80 percent of the value of the imports under consideration has been made up of a miscellaneous group of rubber and plastics housewares (TSUS item 772.15). Some of the more important of these articles known to have been imported in 1966 were: Bathmats, mattress and pillow covers, tumblers, planters, garment bags, flower pots, drinking cups, lampshades, towel racks, and salad bowl sets. Although some of the imports are novelties or unique items, most of them are similar to, and compete directly with, articles of domestic origin.

The array of cases holding an agricultural implement to be one used in the production of food from the soil or the raising of domestic animals for food and raiment, *United States* v. *Boker & Co.*, 6 Ct. Cust. Appls. 243, T.D. 35472; *United States* v. *Tower*, 6 Ct. Cust. Appls. 562, T.D. 36199, is so numerous additional citations are not necessary. In addition the court has held that only such implements as are used by farmers on farms for the production of food and raiment and not those utilized in marketing are entitled to free entry under such provision. *Staalkat of America, Inc.* v. *United States*, 59 Cust. Ct. 241, C.D. 3130, 273 F. Supp. 417 (1967), aff'd, 56 CCPA 86, C.A.D. 959, 417 F. 2d 789 (1969); *Sortex Co. of North America* v. *United States*, 56 CCPA 41, C.A.D. 951, 410 F. 2d 443 (1969).

The provision for horticultural implements first appeared in the Tariff Schedules of the United States and was, according to the "Tariff Classification Study," included to correct past confusion and anomalous results. It is axiomatic that a tariff term is to be

considered in accordance with its common meaning. *Ozen Sound Devices* v. *United States*, 67 CCPA ——, C.A.D. 1246, 620 F. 2d 880 (1980). To ascertain the common meaning of a term in trade and commerce, the court may consult dictionaries and other lexicographic material. *Schott Optical Glass, Inc.* v. *United States*, 67 CCPA ——, C.A.D. 1239, 612 F. 2d 1283 (1979). The term horticulture is defined as follows:

> *Horticulture* n. * * * the cultivation of an orchard, garden, or nursery on a small or large scale: the science and art of growing fruits, vegetables, flowers, or ornamental plants—compare Floriculture, Olericulture, Pomology. ["Webster's Third New International Dictionary."]
>
> *Horticulture* n. 1 The cultivation of a garden, or the mode of cultivation employed in a garden. 2 That department of the science of agriculture which relates to the cultivation of gardens or orchards, including the growing of vegetables, fruits, flowers, and ornamental shrubs and trees. See synonyms under Agriculture. ["Funk & Wagnalls Standard Dictionary."]

The sprouting of seeds in the imported trays falls within the common meaning of the term horticulture.

In *United States* v. *S. S. Perry*, 25 CCPA 282, T.D. 49395 (1938), certain celluloid poultry leg bands, which were used for identification purposes, were held to be implements. The court therein held that the term implement should be given a broad meaning and is not limited to or synonymous with a tool or utensil. In *Border Brokerage*, *supra*, the court held that certain plastic planting bullets, used for propagating trees, both of the crop type and of the ornamental type, were agricultural implements. The court therein, in reviewing the changes made from the Tariff Act of 1930 to the TSUS in 1962, noted the elimination of the distinction between agricultural and horticultural purposes.

Under the foregoing it is apparent the sprouting trays involved are horticultural implements entitled to entry free of duty under item 666.00, TSUS, as claimed.

Judgment will be entered accordingly.

(Slip Op. 81–17)

ELIZABETH RIVER TERMINALS, INC., PLAINTIFF *v.* UNITED STATES, DEFENDANT

Court No. 75–10–02534

Ship Repairs

A barge purchased by the plaintiff for use as a crane platform was towed to Canada for repairs. Upon return to the United States

it was assessed with ship repair duties under section 466(a), Tariff Act of 1930, as amended (19 U.S.C. 1466(a)). The barge was held to be a vessel and not entitled to the limited exemption from assessment of duties in section 1466(e).

FOREIGN REPAIRS TO U.S. VESSEL

The cost of repairs made in a foreign port to the barge, *Cambria*, was assessed by Customs officials at the rate of 50 per centum ad valorem under 19 U.S.C. 1466(a). Under that provision repair duties are levied upon all vessels documented under the laws of the United States to engage in foreign or coasting trade, unless exempt by 19 U.S.C. 1466(e).

VESSELS—DEFINED UNDER CUSTOMS LAWS

In determining whether watercraft are vessels, the test includes whether they are instrumentalities of commerce as opposed to *articles* of commerce. *United States* v. *Seagull Marine*, 67 CCPA——, C.A.D. 1251, —— F. 2d —— (1980).

CUSTOMS DUTIES—STATUTORY CONSTRUCTION—LEGISLATIVE INTENT

19 U.S.C. 1466(a) provides for assessment of duties on ship repairs made in a foreign country. 19 U.S.C. 1466(e), added January 5, 1971, provides for a limited exemption from such assessment under certain conditions. In determining whether the cost of repairs statute applies to barges, the legislative history of 19 U.S.C. 1466 (a) and (e) indicates that Congress intended repairs on barges undertaken in a foreign country to fall within section 1466(a) unless the conditions set out in section 1466(e) are met.

[Judgment for defendant.]

(Decided February 26, 1981)

Vandeventer, Black, Meredith & Martin (*G. W. Birkhead* at the trial and on the briefs) for the plaintiff.

Thomas S. Martin, Acting Assistant Attorney General; *Joseph I. Liebman*, Attorney in Charge, International Trade Field Office, Commercial Litigation Branch (*Madeline B. Kuflik* at the trial and on the brief), for the defendant.

RE, Chief Judge:

In this action, plaintiff sues to recover duties assessed on the cost of repairs made in a foreign country to its barge, the *Cambria*. The repairs, on which duties were assessed and which plaintiff seeks to have refunded, were made in Montreal, Quebec, Canada, in 1973.

Plaintiff, Elizabeth River Terminals, Inc., operates a dry bulk cargo facility. In its operation, plaintiff loads and unloads deepwater vessels, stores dry bulk materials and handles scrap metal for export.

The *Cambria* was purchased by the plaintiff on July 9, 1973, for use as a crane platform moored at its place of business in Norfolk, Va. Earlier, the *Cambria* was a self-propelled Great Lakes ore carrier. In 1968, it was dropped from classification as an ore carrier, and the

engines were deactivated. From 1968 until its purchase by plaintiff, the *Cambria* was moored to the shore in Milwaukee, Wis., and was used for loading, unloading, and holding scrap.

After the plaintiff purchased the *Cambria*, it was towed from Milwaukee to Montreal for the purpose of making certain repairs. Some of the repairs were necessary for the sea portion of the tow, whereas others were made for its use in Norfolk, Va. In order to permit the voyage from Montreal to Norfolk, Va. the *Cambria* was registered by the U.S. Coast Guard. The *Cambria* was readmeasured as a barge, and certificates of registry and inspection were issued by the U.S. Coast Guard. The certificate of inspection prohibited the carrying of cargo.

After the repairs were made in Montreal, the *Cambria* was towed to Norfolk, Va., where, pursuant to section 466(a) of the Tariff Act of 1930, as amended (19 U.S.C. 1466(a)), duties were assessed on the cost of the foreign repairs. Section 466(a) of the statute provides for a duty of 50 per centum to be assessed on the cost of repairs made in a foreign port on a vessel documented under the laws of the United States to engage, or intended to be employed, in foreign or coasting trade. Subsection (d) of section 466 (formerly subsection (b) and redesignated (d) by Public Law 95–410 (1978)), not in issue in this case, provides for a remission of duties for certain "necessary repairs," i.e., repairs "compelled, by stress of weather or other casualty." *See Suwannee Steamship Co.* v. *United States*, 79 Cust. Ct. 19, C.D. 4708, 435 F. Supp. 389 (1977). On January 5, 1971, subsection (e) (formerly subsection (c) and redesignated (e) by Public Law 95–410 (1978)) was added which provides for an exemption from duties for "any vessel designed and used primarily for purposes *other than* transporting passengers or property in the foreign or coasting trade" if certain specific criteria are met. [Italic added.]

Plaintiff does not dispute the amount of the duties assessed, but contends that, under this court's holding in *Corpus Co.* v. *United States*, 69 Cust. Ct. 170, 176, C.D. 4390, 350 F. Supp. 1397, 1402 (1972), appeald ismissed, 60 CCPA 185 (1973), "[w]here a vessel does not engage in trade, is not intended to engage in trade, and indeed is physically incapable of engaging in trade, its repairs are not dutiable under section 466."

Although a certificate of registry was issued, plaintiff nevertheless asserts that the *Cambria* was not used in the foreign or coastingtrade, and was not intended for such use. Hence, it contends that the duties imposed by section 466(a) of the Tariff Act of 1930, as amended, do not apply. It adds that since the *Cambria* was used as a shore facility affixed to the pier in Milwaukee, and was intended to be affixed to the pier in Norfolk, clearly, it should be controlled by the decision in the *Corpus* case which dealt with vessels engaged exclusively in ocean-

ographic research. Plaintiff states that "the *Cambria* not only passes the *Corpus* test, but goes further [as] [t]he *Cambria* was arguably not even a vessel, but a floating platform or derelict." Plaintiff claims that, as a crane platform, the *Cambria* is not dutiable under section 466 which is intended to include only documented vessels.

The defendant disagrees, and maintains that the duties were properly assessed upon the repairs performed in Montreal on a vessel documented under the laws of the United States. First, defendant maintains that the congressional intent underlying section 466 is to assist and protect American shipyards and labor from the competition of foreign shipyards and that this is a longstanding policy with national defense implications. Second, defendant contends that with the addition of subsection (e) to section 466 in 1971, Congress made it clear that "any vessel designed and used primarily for purposes other than transporting passengers or property in the foreign or coasting trade," is subject to duties for foreign repairs unless the specific statutory criteria for exemption are met. Third, defendant contends that at the time the foreign repairs were performed upon the *Cambria*, it was a vessel documented under the laws of the United States to engage in foreign or coasting trade. It also contends that the fact documentation was required to transport the *Cambria* to Montreal for the purpose of repairs does not exempt the *Cambria* from the provisions of section 466(a). Defendant maintains that the action by the plaintiff, in transporting the barge to a foreign port for repairs to be performed in a foreign shipyard with foreign labor and materials, is equivalent to an intent to engage in foreign trade within the meaning of section 466(a) (19 U.S.C. 1466(a)). Finally, defendant stresses that the *Corpus* decision interpreted and applied section 466 of the Tariff Act of 1930 as it read prior to the 1971 amendment and the addition of subsection (e).

At the outset, plaintiff's claim depends upon whether the *Cambria* is a vessel within the intendment of 19 U.S.C. 1466(a), and therefore subject to the customs duties for foreign repairs. Plaintiff indicates that if the *Cambria* is not a vessel, it would not be subject to the imposition of duties, and plaintiff would be entitled to judgment in its favor.

The statutory definition of vessel, in the Tariff Act of 1930, as amended, is found in 19 U.S.C. 1401, which provides that:

> (a) The word "vessel" includes every description of water craft or other contrivance used, or capable of being used, as a means of transportation in water, but does not include aircraft.

It is also pertinent that the heading of section 3 of 1 U.S.C. (Rules of Construction) states the following:

> "Vessel" as including all means of water transportation.

These provisions expressly state that "vessel" encompasses "every description of water craft or other contrivance *used, or capable of being used*, as a means of transportation in water," "including *all* means of water transportation." [Italic added.] Numerous cases have interpreted the meaning of the word "vessel." See *The Conqueror*, 166 U.S. 110, 17 S. Ct. 510 (1897); *United States* v. *Seagull Marine*, 67 CCPA ——, C.A.D. 1251, —— F.2d —— (1980). See also *Hitner Sons Co.* v. *United States*, 13 Ct. Cust. Appls. 216, T.D. 41175 (1925). *Cf. United States* v. *Bethlehem Steel Co.*, 53 CCPA 142, C.A.D. 891 (1966) (midbodies), *cert denied*, 386 U.S 912 (1967); *Todd Shipyards Corp.* v. *United States*, 63 Cust. Ct. 165, C.D. 3891 (1969) (midbodies).

An examination of some early cases reveals that a barge without power of self-propulsion was held to be a vessel, and therefore subject to the navigation laws. *Disbrow* v. *The Walsh Bros.*, 36 F. 607 (S.D.N.Y. 1888). A similar holding is found in *The Old Natchez*, 9 F. 478 (C.C.S.D. Miss. 1881), in which an old dismantled hull of a river steamboat, being refitted for use as a wharf boat in loading passengers and merchandise, was held to be a vessel.

In *Hitner Sons Co.* v. *United States*, 13 Ct. Cust. Appls. 216, T.D. 41175 (1925), a former Canadian armored cruiser was classified as manufactures of metal, and although originally designed and intended for use as a means of transportation in water, its substantial structural alteration rendered the design useless as a means of transportation in water. Hence it was held not to be a vessel.

In the present case, the evidence offered by the plaintiff is that the *Cambria* had originally been used as an ore carrier and later as a barge used as a crane platform. It had undergone no major structural alterations as had the cruiser before the courtin the *Hitner* case. Although there was testimony to the effect that the *Cambria* had been permanently moored at a scrap terminal, prior to plaintiff's purchase, the record leaves no doubt that it is a barge capable of being towed from its moorings in Milwaukee without any difficulty. The voyages undertaken clearly refute plaintiff's assertion of a permanent mooring. Regardless of any permanent mooring, the *Cambria* is a barge capable of being used as a means of transportation, and its therefore a vessel within the meaning of the pertinent provisions of law.

The authorities teach that the term "vessel" includes all types of watercraft or contrivance that can be used as a means of transportation in water. The test is not merely size and structure, or self-propulsion, but rather capability and design to serve as a means of transportation in water. *In United States* v. *Seagull Marine*, 67 CCPA——, C.A.D. 1251, —— F. 2d —— (1980), which dealt with the duty-free treatment

accorded vessels by the tariff laws, the Court of Customs and Patent Appeals recently expressed the following:

> As seen in 1. U.S.C. 3, supra, the definition of the term "vessel" is quite broad. However, judicial precedent has limited the definition of "vessel" for tariff purposes and has established that not every watercraft meeting the bare terms of the definition is entitled to entry into the United States duty free. In particular, the scope of the term "vessel" has been narrowed to limit duty-free treatment to watercraft that are *instrumentalities* of commerce as opposed to *articles* of commerce. [Citations omitted.] [Italic in original.]

From the broad language of the pertinent statutes and the authorities examined, it is the determination of the court that the *Cambria*, when it entered into the Port of Norfolk, was a vessel within the meaning of the foreign repairs statute, 19 U.S.C. 1466. It was documented under the laws of the United States, and was capable to being used as a means of transportation in water. Under the reasoning of the *Seagull Marine* case, it was an instrumentality of commerce rather than an article of commerce. There is no question that it had been designed and intended for use as a means of transportation in water. Furthermore, there is no evidence that it had undergone any major structural alterations to change this primary purpose or capability.

It is also pertinent that the Customs Regulations, contained in 19 C.F.R. 4.0 preceding the provisions pertaining to "Arrival and Entry of Vessels," read in part as follows:

> (a) The word "vessel" includes every description of watercraft or other contrivance used or capable of bing used as a means of transportation on water, but does not include aircraft. (19 U.S.C. 1401.)
>
> (b) The term "vessel of the United States" means any vessel documented under the laws of the United States.
>
> (c) The term "documented" means registered, enrolled and licensed, or licensed by the U.S. Coast Guard.

Having concluded that the *Cambria* is a documented vessel within the intendment of 19 U.S.C. 1466(a), the question presented is whether the repairs made on the *Cambria* in Montreal were properly subject to assessment of duties under the terms of the statute at the time that the repairs were made in 1973. The court has concluded that they were, and that the *Cambria* did not qualify for the exemption provided for in subsection (e).

In pertinent part, 19 U.S.C. 1466(a) reads as follows:

> § 1466. Equipment and repairs of vessels.
>
> (a) Vessels subject to duty; penalties.
>
> The equipments, or any part thereof, including boats, purchased for, or the repair parts or materials to be used, or the *expenses of repairs made in a foreign country upon a vessel documented under the laws of the United States* to engage in the foreign

> or coasting trade, or a vessel intended to be employed in such trade, shall, on the first arrival of such vessel in any port of the United States, be liable to entry and the payment of an ad valorem duty of 50 per centum on the cost thereof in such foreign country; * * *. (Italic added.)

Subsection (e) added on January 5, 1971, provides:

> (e) Vessels used primarily for purposes other than transporting passengers or property in the foreign or coasting trade.
>
> In the case of *any vessel designed and used primarily for purposes other than transporting passengers or property in the foreign or coasting trade* which arrives in a port of the United States 2 years or more after its last departure from a port of the United States, the duties imposed by this section shall apply only with respect to (1) fish nets and netting, and (2) other equipments, and parts thereof, and repair parts and materials purchased, or repairs made, during the first 6 months after the last departure of such vessel from a port of the United States. (Italic added.)

In summary, plaintiff invokes the doctrine of stare decisis, and contends that *Corpus Co.* v. *United States*, 69 Cust. Ct. 170, C.D. 4390, 350 F. Supp. 1397 (1972), is authority for the proposition that the *Cambria* is not subject to the assessment of duties pursuant to 19 U.S.C. 1466(a).

The issue, as presented in the *Corpus* case, was whether foreign repairs on oceanographic research vessels documented to engage in foreign trade, but not capable of engaging in foreign trade, were properly subject to assessment of duties under the terms of section 466 of the Tariff Act of 1930, in effect prior to January 5, 1971. In *Corpus* the court decided that "[w]here a vessel does not engage in trade, is not intended to engage in trade, and indeed is physically incapable of engaging in trade, its repairs are not dutiable under section 466." 69 Cust. Ct. at 176.

In *Corpus*, the foreign repairs were made during the period of 1966–1969, and the court expressly stated that duties had been imposed under section 466 of the Tariff Act of 1930 "in effect prior to January 5, 1971." Id. at 171. Clearly, therefore, as indicated by the defendant, the decision in *Corpus* was in interpretation and application of the language of section 466 before the 1971 amendment. In *Corpus*, the court examined prior decisions, and concluded that the pertinent cases closely scrutinized the actual and intended use of the vessel in derermining whether the cost of foreign repairs was dutiable under the statute prior to the 1971 amendment. Consequently, it cannot be asserted that *Corpus* is dispositive of the present case which involves foreign repairs made on the *Cambria* in 1973 after the enactment of subsection (e) to section 466 in 1971.

In the present case, the question presented centers on the interpretation and application of section 466 subsequent to the 1971

amendment by the addition of subsection (e) to the statute. Since the operative facts in *Corpus* occurred prior to the date of enactment of subsection (e) of the statute, and the meaning or effect of that subsection was not before the court, its holding is not stare decisis in the case at bar. *See Cohens* v. *Virginia*, 19 U.S. (6 Wheat.) 120, 179 (1821). As expressly stated in *Corpus*, and as indicated by defendant, the court interpreted and applied the ship repair statute as it existed prior to the addition of subsection (e). In the present case, the court must interpret and apply section 466 of the statute with the 1971 addition of subsection (e).

It cannot be denied that the court must interpret a statute in a manner that will carry out or effectuate the congressional intent. *United States* v. *Gulf Oil Corp.*, 47 CCPA 32, 35, C.A.D. 725 (1959). In ascertaining congressional intent, the court may refer to the legislative history of a statutory enactment, and need not limit its inquiry to a mere reading of the words of the statute. *United States* v. *American Trucking Ass'ns*, 310 U.S. 534, 543–544, 60 S. Ct. 1059, 1063–1064 (1940). *See Train* v. *Colorado*, 426 U.S. 1, 9–10, 96 S. Ct. 1938, 1942 (1976). Clearly statutes are to be read in pari materia, and all subsections must be read in order to glean the legislative intent and animating purpose.

Subsection (a) of 19 U.S.C. 1466 provides for the assessment of duties upon repairs made in foreign ports to vessels documented under the laws of the United States to engage, or intended to be employed, in the foreign or coasting trade. Subsection (e) provides, in material part, that for vessels designed and primarily used for purposes other than transporting passengers or property in the foreign or coasting trade, the duties imposed by section 1466(a) shall only apply to certain materials and repairs made within 6 months after departure from the United States, and when the vessels have not been in a U.S. port for 2 years or more. It is clear that subsection(a) provides for the assessment of duties, and subsection (e) provides for a limited exemption from the assessment under certain specific conditions.

The enactment of subsection (e) in 1971 was intended to relieve certain vessels from the duties imposed in subsection (a). The legislative history of the 1971 enactment (Public Law 91–654 (1971)) states the following:

> EXPLANATION OF COMMITTEE AMENDMENT
>
> Present law requires the imposition of a 50-percent duty on the value of repairs made on, and equipment purchased for, U.S. vessels engaged in foreign trade, when such repairs or equipment were made or purchased in a foreign country. The House bill would have exempted shrimp vessels from this duty.

The committee agrees with the House as to the desirability of this exemption but feels it *should be limited* to those instances where the vessel is abroad for extended periods of time and is not in need of repairs when it departs from this country.

In addition, the committee agrees with a recommendation of the Treasury Department that the relief from tariffs provided by this bill should be extended to noncargo carrying "special purpose" vessels.

* * * * * * *

This amendment is intended to relieve from a 50-percent ad valorem tax on the value of repairs made, and equipment purchased, in foreign countries, those American shrimp and other vessels which must be away from U.S. ports for extended periods of time and which during the course of that time must make normal repairs if they are to remain competitive with their foreign counterparts. The amendment would not adversely affect American shipyards or American labor since *these vessels would have to be in foreign or international waters for 2 years or more in order to be relieved from payment of the duty*, and could not in any event be repaired in U.S. shipyards during their voyages. Besides shrimp boats, the amendment would apply only to "special service vessels," such as *barges*, oil drilling vessels, oceanographic vessels, which, like shrimp boats, in the course of their operations, cannot return to U.S. ports to secure the necessary repairs, without great inconvenience. (Italic added.)

S. Rept. No. 91-1474, 91st Cong., 2d Sess., reprinted in [1970] U.S. Code Cong. & Ad. News 5910-5911.

From the statutory language, as well as the legislative history, it is plain that Congress intended to exempt from duties only those foreign repairs made on special service vessels, such as barges, which meet the conditions set forth in 19 U.S.C. 1466(e). Clearly, Congress entertained no doubt that barges are vessels within the meaning of the statute. Indeed, in the "Explanation of Committee Amendment," barges are expressly mentioned as illustrations or examples of special service vessels.

In providing for the exemption, Congress manifested its understanding and intent that the special service vessels were subject to the duties imposed by section 1466(a); otherwise, there would have been no reason to amend section 466 of the Tariff Act of 1930 by including the exemption found in the present subsection (e).

The legislative history makes it clear that section 1466(e) was intended to relieve certain vessels from the duties imposed by section 1466(a), and that the newly granted relief was conditioned upon the prescribed prerequisites; i.e., that the repairs were made after the first 6 months of a vessel's voyage in foreign or international waters, and that the vessel's voyage in those waters last at least 2 years without the vessel returning to a U.S. port.

The *Cambria* was an ore and steel carrier which was later used as a

barge upon which cranes were mounted. There is no doubt that the *Cambria* is a barge, and that it does not meet the specific conditions required by section 1466(e) for exemption from the foreign repair duties. Although it is used for purposes other than transporting passengers or property, it is nonetheless a special service vessel used as an instrumentality of commerce within the intendment of the statute. The functions of the *Cambria* were directly and solely related to the foreign and coasting trade. It served the operations of the plaintiff by the use of its cranes to load and unload cargo from deepwater vessels, and by the storing of dry bulk material and scrap for export.

It cannot be questioned that by virtue of its certificate of registry the *Cambria* was a vessel documented under the laws of the United States to engage in the foreign or coasting trade. As a seagoing barge, it was issued a certificate of registry and was required to be inspected by the Coast Guard. It is also significant that as a documented vessel it enjoyed the protection of the laws of the United States.

To accept plaintiff's interpretation of section 1466 would mean that, in 1971, by enacting subsection (e), Congress enacted a subsection which, for special service vessels, either repeated or contradicted subsection (a) since, according to plaintiff's reading of the statute, special service vessels like the *Cambria* were not and are not subject to the duties provided for in subsection (a). Such a meaning would do violence to the basic principle of statutory interpretation and application that a court should give effect to all provisions of a statute. It cannot adopt a meaning which would render a section or subdivision of a statute a mere redundancy. See *Jarecki* v. *G. D. Searle & Co.*, 367 U.S. 303, 307–308, 81 S. Ct. 1579, 1582 (1961). Moreover, as stated by the U.S. Court of Customs and Patent Appeals, in construing different parts of a tariff act which appear to be in conflict it is the court's function to harmonize them so as to give each of them meaning, and achieve a result which was reasonably within the legislature's contemplation. *Beaver Products Co., Inc.* v. *United States*, 17 CCPA 434, T.D. 43878 (1930); accord, *United States* v. *Corning Glass Works*, 66 CCPA 25, C.A.D. 1216, 586 F. 2d 822 (1978); see also *Weinberger* v. *Hynson, Westcott & Dunning*, 412 U.S. 609, 631, 93 S. Ct. 2469, 2484 (1973). By interpreting 19 U.S.C. 1466 (a) and (e) so that special service vessels are subject to the duties provided for in subsection (a) unless they meet the specific conditions set forth in subsection (e), the court is implementing the stated congressional intent, and also avoids any conflict between the two subsections of the statute.

It is argued that the interpretation suggested by defendant, and accepted by the court, imposes an unnecessary hardship upon certain vessels. The question, however, is one of legislative policy. It is

within the prerogative of the Congress to determine whether vessels are to be subject to the imposition of foreign repair duties, and under what circumstances those duties are not to be imposed or remitted. See *Erie Navigation Co.* v. *United States*, 83 Cust. Ct. 47, C.D. 4820, 475 F. Supp. 160 (1979).

The legislative history of 1466 (a) and (e) indicates clearly that Congress intended the exemption from duties contained in subsection (e) to be limited, and that Congress intended and understood that barges were subject to the imposition of duties prescribed by subsection (a) as modified or limited by the specific provisions of subsection (e). On the evidence presented the *Cambria* did not qualify for the exemption provided for in 19 U.S.C. 1466(e) from the assessment of the duties imposed pursuant to the provisions of 19 U.S.C. 1466(a).

In view of the foregoing, it is the determination of the court that the *Cambria* was properly subject to duties for vessel repairs made in a foreign country pursuant to 19 U.S.C. 1466(a). Since the duties at issue were properly assessed, plaintiff's action for their recovery must fail.

Judgment will issue accordingly.

(Slip Op. 81–18)

THE BUDD COMPANY, RAILWAY DIVISION, PLAINTIFF *v.* THE UNITED STATES, DEFENDANT; NISSHO-IWAI AMERICAN CORPORATION AND KAWASAKI HEAVY INDUSTRIES, LTD., INTERVENORS, PARTIES-IN-INTEREST AND BREDA COSTRUZIONI FERROVIARIE, S.P.A., INTERVENOR, PARTY-IN-INTEREST

Court No. 80–3–00505

Opinion and Order

[Application of plaintiff for preliminary injunction, denied.]

(Dated February 26, 1981)

Barnes, Richardson & Colburn (*Andrew P. Vance* and *Raymond F. Sullivan, Jr.* at the oral argument and on the briefs) for the plaintiff.

Thomas S. Martin, Acting Assistant Attorney General; *David M. Cohen*, Director, International Trade Field Office, Commercial Litigation Branch (*Francis J. Sailer* at the oral argument and on the briefs), for the defendant.

Arent, Fox, Kintner, Plotkin & Kahn (*Stephen L. Gibson* and *Evan R. Berlack* at the oral argument and on the briefs) for Nissho-Iwai American Corporation and Kawasaki Heavy Industries, Ltd., intervenors, parties-in-interest.

Bosco & Curry (*Joseph A. Bosco* at the oral argument) for Breda Costruzioni Ferroviarie, S.p.A., intervenor, party-in-interest.

BOE, Judge:

Plaintiff has filed its application for preliminary injunction seeking to enjoin the defendants herein, their officers, agents, servants, and employees, and specifically the U.S. Customs Service and the employees thereof, from liquidating any and all entries or withdrawals from warehouse for consumption of parts and components of rail passenger cars imported from Japan and Italy pursuant to the contracts which are the subject of the preliminary determination by the International Trade Commission, presently under review, during the pendency of the litigation in this court and its appellate tribunals.

In requesting this provisional relief, the plaintiff predicates its right thereto under 28 U.S.C. 2643(c)(1) as enacted by the Customs Courts Act of 1980, providing:

> (c)(1) Except as provided in paragraphs (2), (3), and (4) of this subsection, the Court of International Trade may, in addition to the orders specified in subsections (a) and (b) of this section, order any other form of relief that is appropriate in a civil action, including, but not limited to, declaratory judgments, orders of remand, injunctions, and writs of mandamus and prohibition.

The defendant and the intervenors herein contest plaintiff's application asserting: (1) That the requested injunctive relief is precluded by the statutory provisions governing liquidation of entries, and the suspension thereof, pending litigation, contained in 19 U.S.C. 1516a, as amended by the Trade Agreements Act of 1979; (2) that the suspension of liquidation at this time would be contrary to the antidumping statutes and to the obligations of the United States under the International Antidumping Code; (3) the requisite criteria for preliminary injunctive relief herein has not been demonstrated by the plaintiff.

This court cannot agree that, with respect to the instant proceedings and the application for injunctive relief herein, the provisions of 19 U.S.C. 1516a are exclusive or that the same limit the circumstances under which liquidation may be suspended only to an affirmative preliminary determination by the administering authority as provided by 19 U.S.C. 1673b(d)(1). It is indeed recognized that by the enactment of the Trade Agreements Act of 1979, Congress endeavored to provide a pattern and schedule in antidumping proceedings to permit the orderly determinations of material injury by the International Trade Commission as well as the determination of the existence of less than fair value sales by the administering authority. It is likewise recognized that injunctive relief was for the first time provided for therein with specificity both as to the appropriate occasion for the granting of such relief as well as the criteria requisite therefor.

However, the statutory provisions of 28 U.S.C. 2643(c)(1), as enacted by the Customs Courts Act of 1980, when read in context with 19 U.S.C. 1516a, as enacted by the Trade Agreements Act of 1979, can only serve to emphasize the congressional intent to confer upon the U.S. Court of International Trade remedial powers, coextensive with the powers of the U.S. District Courts and, accordingly, to grant to the Court of International Trade expanded injunctive power and authority, appropriate in a civil action. In short, if extraordinary circumstances so warrant, the equitable power granted by the provisions of section 2643(c)(1) may be exercised by this court in order to secure the relief which may be necessary and proper, notwithstanding the fact that more restrictive provisions originally may have been provided in prior statutory enactments.

The defendant and the intervenors have cited the case of *Haarman & Reimer Corporation* v. *United States*, 1 CIT ——, Slip Op. 81–13 (Feb. 3, 1981), as supportive of their contention that the provisions of 19 U.S.C. 1516a are exclusive and thereby restrict the exercise of the injunctive powers granted to the Court of International Trade by 28 U.S.C. 2643(c)(1).

The decision of this court in *Haarman & Reimer, supra*, is deemed inapplicable to the instant proceeding. In that decision this court concluded that 28 U.S.C. 1581(i), under which statute the plaintiff therein sought to predicate its action for judicial review of a preliminary negative determination by the administering authority that critical circumstances did not exist, conferred a residual grant of jurisdictional authority only and was not intended by the Congress to create a new cause of action. See H. Rept. No. 96–1235, 96th Cong., 1st sess. 47. This court further concluded therein that the legislative history with respect to section 1581(i) explicitly and clearly confirmed the congressional intent to designate 19 U.S.C. 1516a as the exclusive statutory authority for the judicial review of the antidumping proceeding in question. See H. Rept. No. 96–1235, supra at 48. In view of the unlikelihood of the plaintiff prevailing on the merits, this court, accordingly, denied the plaintiff's accompanying application for a preliminary injunction.

In the instant proceeding, on the other hand, the plaintiff, having instituted in this court its action for judicial review of a preliminary negative determination by the International Trade Commission with respect to material injury or a threat thereof pursuant to 19 U.S.C. 1516a, now has requested this court to exercise the plenary power and authority granted to it by 28 U.S.C. 2643(c)(1) to provide provisional relief in the form of a preliminary injunction. This equitable power so conferred upon the U.S. Court of International Trade necessarily must be distinguished from the residual grant of jurisdictional

authority provided by 28 U.S.C. 1581(i), which was the subject of consideration by this court in the *Haarman & Reimer* decision, *supra.* Again, the House Report to the Customs Courts Act of 1980, supra, explicitly enunciates the congressional intent in the enactment of section 2643 and subsection (c)(1) thereof:

> Subsection (c)(1) is a *general grant of authority for the Court of International Trade to order any form of relief that it deems appropriate under the circumstances.* It is the committee's intent that this authorization be deemed to grant the Court of International Trade remedial powers coextensive with those of a Federal district court. This provision makes it clear that the court may issue declaratory judgments, writs of prohibition and mandamus, orders of remand, and preliminary or permanent injunctive relief, except as provided in paragraphs (2), (3), and (4) of this subsection.
>
> In the Trade Agreements Act of 1979, Congress, for the first time, authorized the Customs Court, renamed by this bill the Court of International Trade, to issue injunctive relief in limited circumstances. Subsection (c)(1) *expands the circumstances under which the court may* order injunctive relief. When a party requests the court to grant injunctive relief, the court is to be guided by the same factors utilized by a Federal district court when it considers a request for a preliminary or permanent injunction. [Italic supplied.] At 61.

In the opinion of this court, therefore, the application of the plaintiff for injunctive relief in the instant proceeding pursuant to the provisions of 28 U.S.C. 2643(c)(1) is properly before this court and within its power and authority to consider. Accordingly, the sole question remaining to be resolved herein is whether the plaintiff has sustained its burden of establishing the criteria requisite to the granting of its requested injunctive relief.

One of the most important factors to be considered in determining whether a preliminary injunction may be warranted is the significance of the threat of irreparable injury to plaintiff if the injunction is not granted.

The standard of irreparable injury is not restricted alone to proceedings seeking injunctive relief. It is a well-established principle that without a clear showing of irreparable injury failure to exhaust administrative remedies will serve as a bar to judicial intervention in the administrative process. *Renegotiation Board* v. *Bannercraft Clothing Co.*, 415 U.S. 1, 24 (1974).

It appears that the plaintiff predicates the cause of its alleged irreparable injury upon the delay occasioned by the defendant resulting in a protracted judicial review proceeding. This court is in agreement that the time which has elapsed since the submission of plaintiff's original petition to the Secretary of the Treasury in October 1979 requesting an investigation of less than fair value sales thwarts the

intent of Congress to provide a speedy review of administrative determinations. More than 1 year has elapsed since the preliminary negative determination of the International Trade Commission was made on February 11, 1980. All of the litigants herein may be said to share in the ensuing delay. Needlessly, the parties have permitted themselves to become encumbered in a procedure on review, ill designed to afford the expeditious presentation of the issues to this court.

To predicate a claim for irreparable injury occasioned by a delay in the review process, which well could have been foreseeable, controlled or prevented, cannot be deemed an injury of the character sufficient to justify the exercise of the extraordinary provisional authority of this court.

The nature and extent of irreparable injury requisite to injunctive relief has been aptly delineated in Wright and Miller, "Federal Practice and Procedure; Civil" section 2948, at 436–38:

> There must be a likelihood that irreparable harm will occur. Speculative injury is not sufficient; there must be more than an unfounded fear on the part of the applicant. Thus, a preliminary injunction will not be issued simply to prevent the possibility of some remote future injury. A presently existing actual threat must be shown. However, the injury need not have been inflicted when application is made or be certain to occur; a strong threat of irreparable injury before trial is an adequate basis. A long delay by plaintiff after learning of the threatened harm may be taken as an indication that the harm would not be serious enough to justify a preliminary injunction.

Nor has the plaintiff presented to this court any showing with respect to the extent of the actual irreparable injury to which it may be subjected, if the injunctive relief requested is not granted. Other than a reference made during oral argument as to the delivery dates of imported parts and components contemplated in the three contracts in question, no showing has been made whether any parts in fact have been imported, the extent of such importations or the actual effect and injury caused thereby to the plaintiff.

The plaintiff contends that it is not his burden to bring forward such evidence in that the pertinent information would be solely within the custody and control of the defendant and the intervenors. This court, however, is not convinced that such an abdication of responsiblity by the plaintiff, as the moving party, can be accepted in light of the extensive discovery procedures available in this court. See McCormick on Evidence 787, at note 19.

A showing of injury, a requisite for the granting of injunctive relief, is also the subject of a determination concerning which the International Trade Commission is charged by statute to consider in its preliminary determination. The preliminary negative determination

with respect to material injury, previously made by the Commission, has neither been affirmed, rejected, modified nor altered in any form by this court upon its review thereof. The order of this court under date of December 29, 1980, remanding the administrative proceedings to the Commission for further consideration of certain information, particularly contained in the administrative record, calls upon that administrative body to amplify its findings of fact so as to enable this court to more fully understand upon review the reasons and the rational basis upon which the Commission's determination was made. Whether the imported parts in question may represent sales at less than fair value, in like manner, is a determination concerning which the administering authority is charged to consider in its subsequent preliminary determination.

Accordingly, in the absence of an actual and specific showing of the irreparable damage and harm either presently affecting or threatening to affect the plaintiff, its present application for injunctive relief, in the opinion of this court, should properly be denied, and the administrative process relating to the determination of the criteria, which the plaintiff has been unable to factually demonstrate in its present application, be allowed to continue without delay or interruption by judicial intervention.

Now therefore, it is hereby

ORDERED that the application of the plaintiff for a preliminary injunction in the above-entitled action be and is hereby denied.

(Slip Op. 81–19)

ZENITH RADIO CORPORATION, PLAINTIFF, *v.* UNITED STATES, DEFENDANT

Court No. 80–5–00861

On Plaintiff's Motion for Partial Summary Judgment and Defendant's Cross-Motion for Summary Judgment

[Plaintiff's motion denied and defendant's motion granted in part and denied in part.]

(Decided February 27, 1981)

Frederick L. Ikenson and *Philip J. Curtis* for the plaintiff.

Thomas S. Martin, Acting Assistant Attorney General (*David M. Cohen*, Director, Commerical Litigation Branch, on the briefs), for the defendant.

MALETZ, Judge:

Plaintiff, a domestic manufacturer of television sets, brought this action challenging as unlawful certain settlement agreements into

which the United States had entered on April 28, 1980, with various importers of television sets from Japan. As a first cause of action, the complaint alleges that the settlement was not authorized by statute. Alternatively, as a second cause of action, the complaint alleges that even assuming the existence of statutory authority for the settlement, the Government officials who recommended and determined that the claims should be settled acted arbitrarily, capriciously, in bad faith and unlawfully. It is undisputed that by virtue of 28 U.S.C. 1581(i)--which was provided for by the Customs Courts Act of 1980 (94 Stat. 1727)—this court has jurisdiction to entertain the action.

Plaintiff has moved for partial summary judgment on its first cause of action and defendant has cross-moved for summary judgment on the entire case.[1]

The background facts are as follows: On March 10, 1971, the Secretary of the Treasury issued a finding of dumping of television sets from Japan, thereby making such sets subject to antidumping duties.[2] T.D. 71–76, 36 F.R. 4597 (1971). From the date of this finding through 1979, most of these duties were not collected. On March 28, 1980, the Secretary of Commerce[3] announced an administrative review of the dumping finding (45 F.R. 20511), as required by section 751 of the Tariff Act of 1930, as added by the Trade Agreements Act of 1979 (19 U.S.C. 1675).[4] On April 28, 1980, prior to the completion of this administrative review, the Secretary of Commerce settled all claims for antidumping duties arising from entries of the sets from July 1, 1973, to March 31, 1979. Plaintiff then filed this action challenging the lawfulness of this settlement.

Against this background, we consider plaintiff's motion for partial summary judgment on its first cause of action.[5] Specifically, plaintiff contends that the settlement is not authorized by section 617 of the

---

[1] Plaintiff's motion for partial summary judgment was originally filed as a cross-motion to defendant's motion to dismiss for lack of jurisdiction, and defendant's cross-motion for summary judgment was originally filed as a cross-cross-motion. Since defendant's motion to dismiss was rendered moot by the passage of the Customs Courts Act of 1980, the present motions are referred to as "plaintiff's motion for partial summary judgment" and "defendant's cross-motion for summary judgment."

[2] The Secretary of the Treasury's dumping finding was made pursuant to sec. 201(a) of the Antidumping Act of 1921, as amended (19 U.S.C. 160(a)), an enactment which was repealed by the Trade Agreements Act of 1979, Public Law 96-39, title I, section 106(a), 93 Stat. 193. However, pursuant to sec. 106(a) of the Trade Agreements Act of 1979, this dumping finding remained in effect.

[3] The Secretary of the Treasury's responsibility to administer antidumping matters has been transferred to the Secretary of Commerce by Reorganization Plan No. 3 of 1979, sec. 5(a) (1) (C), 44 F.R. 69273 (1979).

[4] Sec. 751 requires the Secretary to conduct a periodic review and determination of antidumping duties.

[5] Previously, this court concluded "that plaintiff has made out a substantial case on the merits on its alternative second cause of action * * *" and issued a preliminary injunction restraining the implementation of the settlement agreement. *Zenith Radio Corporation* v. *United States*, 1 CIT——, Slip Op. 80-10, p. 7 (Dec. 9, 1980). The court's memorandum and order specifically noted, however, that the decision to issue the preliminary injunction was made "without reference to plaintiff's first cause of action * * *." Ibid.

Tariff Act of 1930, as amended (19 U.S.C. 1617) and is therefore ultra vires, illegal and void. Section 617 reads as follows:

> Upon a report by a customs officer, U.S. attorney, or any special attorney, having charge of *any claim arising under the customs laws*, showing the facts upon which such claim is based, the probabilities of a recovery and the terms upon which the same may be compromised, the Secretary of the Treasury is authorized to compromise such claim, if such action shall be recommended by the General Counsel for the Department of the Treasury. [Italic added.][6]

According to plaintiff, section 617 only authorizes the settlement of liquidated cliams for antidumping duties.[7] In this connection, plaintiff observes—correctly—that the legislative history of section 617 is essentially silent. However, in support of its position that section 617 authorizes only the settlement of liquidated claims for duties, plaintiff relies heavily upon the history of Rev. Stat. 3469 which was repealed in 1978. See 92 Stat. 2679.

Rev. Stat. 3469 at the time relevant here read as follows:

> Upon a report by a district attorney, or any special attorney or agent having charge of *any claim in favor of the United States* showing in detail the condition of such claim, and the terms upon which the same may be compromised, and recommending that it be compromised upon the terms so offered, and upon the recommendation of the solicitor of the Treasury, the Secretary of the Treasury is authorized to compromise such claim accordingly. * * * [Italic added.]

Based on the similarity of language between the two provisions, plaintiff argues that section 3469 was the precursor of section 617 and therefore that the case law and administrative construction of section 3469 apply for the most part to section 617.

As for case law, plaintiff relies on *United States* v. *George*, 25 F. Cas. 1277 (C.C.S.D.N.Y. 1869) which, it says supports its position that section 617 authorizes only the settlement of liquidated claims. In *George*, certain informers claimed entitlement to a portion of sums that were paid to the Government under a compromise agreement. The informers contended that the sums constituted fines or penalties in which they had a right to share. The Government on the other hand argued that since the funds were paid by way of compromise under section 10 of the Act of March 3, 1863, 12 Stat. 740—which was a virtually identical predecessor provision to section 3469—such funds were duties and that the informers therefore were not entitled

---

[6] The Secretary of the Treasury's function under sec. 617 have been transferred to the Secretary of Commerce, insofar as those functions relate to the settlement of claims for antidumping duties. Reorganization Plan No. 3 of 1979, supra, section 5(a)(1)(G).

[7] Liquidation is the final computation of duties accruing on an entry. See 19 CFR 159.1. Most of the entries which are the subject of the disputed settlement are unliquidated.

to a share thereof. The court rejected the Government's argument and held: (1) That the compromise had no legal effect on the character of the funds and (2) that a portion of the funds constituted fines or penalties in which the informers were entitled to share. Plaintiff emphasizes that the court in *George* added that section 10 "might well be held to confer no power in regard to claims not in suit." 25 F. Cas. at 1279. But this statement was simply dictum which can scarcely be regarded as dispositive of the issue here.

As for administrative construction, plaintiff relies upon various opinions of the Attorney General construing section 10 and its successor section 3469 in which the Attorney General concluded that those provisions were enacted for the benefit of the U.S. revenue and (1) Did not permit the Secretary of the Treasury to exercise indirectly powers which Congress specifically conferred on other agencies; (2) did not authorize the settlement of claims for real property; (3) did not permit hardship to the debtor to be taken into consideration by the Secretary; and (4) did not include the Comptroller of the Treasury as an agent. However, these opinions of the Attorney General have no relevance here.

Equally without merit is plaintiff's assertion in its opening brief that the legislative history of section 3469 shows that that section only authorized the settlement of claims for uncollected judgments. The fact of the matter is that section 3469 is not so limited as plaintiff itself concedes in its reply brief.

Nor is there any legislative history indicating that Congress intended that section 617 be construed in light of the history of section 3469. Section 617 was originally enacted in 1922 (42 Stat. 987) and provided specifically for the settlement of claims arising under the customs laws. Significantly, when section 617 was adopted, section 3469 was neither repealed nor modified and thus continued to provide authority for the settlement of claims other than those arising under the customs laws.

The important point is that the language of section 617 differs in several significant respects from the language of section 3469. For example, section 617 is applicable to "any claim arising under the customs laws," whereas section 3469 pertains to "any claim in favor of the United States." Thus the inescapable conclusion is that in enacting section 617, Congress intended to provide a mechanism for the settlement of claims arising under the customs laws which would be different from the mechanism provided by section 3469. This consideration militates against construing section 617 in accordance with the history of section 3469. For "'[w]here * * * words of a later statute differ from those of a previous one on the same or a related subject, the legislature must have intended them to have a different

meaning." *Klein* v. *Republic Steel Corp.*, 435 F. 2d 762, 765–766 (3d Cir. 1970). See also, e.g., *United States* v. *Crocker-Anglo National Bank*, 277 F. Supp. 133, 155 (N.D. Cal. 1967); *Sol Kahaner & Bro.* v. *United States*, 71 Cust. Ct. 97, 102, C.D. 4480, 372 F. Supp. 1393, 1398 (1973), aff'd, 62 CCPA 35, C.A.D. 1141, 509 F. 2d 1186 (1975).

What is more, the language of section 617 is clear and the court is therefore dutybound to interpret the section in accordance with its plain meaning. See, e.g., *Trans Alaska Pipeline Rate Cases*, 436 U.S. 631, 643 (1978). It is quite true that statutory clarity does not bar a court's consideration of legislative history. See, e.g., *Train* v. *Colorado Pub. Int. Research Group*, 426 U.S. 1, 10 (1976); *Hunt* v. *Nuclear Regulatory Commission*, 611 F. 2d 332, 336 (10th Cir. 1979), cert. denied, 445 U.S. 906 (1980). Nonetheless, the plain language of a statute must prevail in the absence of legislative history clearly indicating that the congressional intent differed from that manifested by the language used. See *United States* v. *Oregon*, 366 U.S. 643, 648 (1961), reh. denied, 368 U.S. 870 (1961); *United States* v. *United States Steel Corp.*, 482 F. 2d 439, 444 (7th Cir. 1973), cert. denied, 414 U.S. 909 (1973). Measured by this standard, absent here is any legislative history indicating that Congress intended section 617 to be given a meaning other than one based on its plain language.

Regarding the plain language, plaintiff argues that the word "claim" as used in section 617 means only claims for liquidated duties, i.e., claims for a sum certain. However, it is axiomatic that a claim by the United States for the appropriate duties arises upon the entry of a shipment of merchandise into the customs territory of the United States. Indeed, imported merchandise may not be released to an importer unless estimated duties or a bond for duties is deposited at the time of entry. 19 U.S.C. 1505.

It is true that the amount of the claim for duties may be uncertain until liquidation occurs. Nevertheless, the claim for duties exists and an importer obtains possession of goods which he imports subject to the claim of the United States.

Here, the importers of television sets covered by the dumping finding obtained the goods but only subject to the claim of the United States for the duties to be ultimately assessed upon liquidation. Thus, the United States possessed a claim against the importers even though the exact amount of the claim had not been fixed through the process of liquidation.[8]

---

[8] In its ordinary meaning, the word "claim" is a broad comprehensive word including within its scope "a calling * * * for something due." Webster's Third New International Dictionary of the English Language (1968). A "claim" has been defined for purposes of the Federal Rules of Civil Procedure as "the aggregate of operative facts which give rise to a right enforceable in the courts." *Original Ballet Russe* v. *Ballet Theatre*, 133 F. 2d 187, 189 (2d Cir. 1943). The fact that the exact amount of the claim is not fixed until liquidation is irrelevant to the question of whether a "claim" exists prior to that date.

Alternatively, plaintiff argues that if section 617 is construed as authorizing the settlement of claims prior to the completion of the administrative review required by section 751 of the Tariff Act of 1930, as added by the Trade Agreements Act of 1979 (19 U.S.C. 1675), Congress' purpose in passing the Trade Agreements Act, i.e., the speedy and efficient collection of antidumping duties, would be frustrated. While plaintiff cites no portion of the Trade Agreements Act or its legislative history explicitly stating that it was Congress' intent to limit the scope of section 617, it argues that the passage of that Act impliedly limited the scope of that section.

This court should of course construe section 617 so as to give effect to the section as a whole. *Weinberger* v. *Hynson, Westcott & Dunning*, 412 U.S. 609, 633 (1973); *Certified Color Mfrs. Ass'n* v. *Mathews*, 543 F. 2d 284, 296 (D.C. Cir. 1976). Moreover, it is presumed that in enacting section 751 Congress was aware of its prior enactment of section 617. See, e.g., *Cannon* v. *University of Chicago*, 441 U.S. 677, 696–697 (1979); *In re Vinarsky*, 287 F. Supp. 446, 449 (N.D.N.Y. 1968). And it is also presumed that Congress intended both statutes to be interpreted as fully effective. See, e.g., *Morton* v. *Mancari*, 417 U.S. 535, 551 (1974).

Obviously, these presumptions are not irrebuttable. Nevertheless, repeal of a statute by implication is not favored. *FAA Administrator* v. *Robertson*, 422 U.S. 255, 265 (1975). Further, this court should avoid an interpretation of section 617 rendering it only partially effective. *Certified Color Mfrs. Ass'n* v. *Mathews*, *supra*, 543 F. 2d at 296. Thus sections 617 and 751 are each to be regarded as effective unless there is clear indication that Congress intended otherwise. *FAA Administrator* v. *Robertson*, *supra*, 422 U.S. at 266. Section 751 should therefore not be read to create an implied exception to, or limitation of, section 617 in the absence of a demonstrated repugnancy between the two provisions. *Morton* v. *Mancari*, *supra*, 417 U.S. at 551.

No such repugnancy exists here since the two provisions reflect different congressional concerns and apply to different functions of the Secretary. The purpose of section 617 is to provide the Secretary with the authority to settle claims for duties and to outline the procedures to be followed and the factors to be weighed in the course of determining whether a given claim for duties should be settled.

The purpose of section 751 is entirely different.[9] That section

[9] The relevant portions of sec. 751 (19 U.S.C. 1675) read as follows:

(a) *Periodic review of amount of duty.*—

(1) *In general.*—At least once during each 12-month period beginning on the anniversary of the date of publication * * * an antidumping duty order under this title or a finding under the Antidumping Act, 1921, * * * the administering authority (i.e., the Secretary of Commerce), after publication of notice of such review in the Federal Register, shall—

* * * * * * *

(B) review, and determine (in accordance with par. (2)), the amount of any antidumping duty, * * *

* * * * * * *

provides in part that where there has been a finding of dumping, the Secretary shall review and determine the amount of antidumping duty to be assessed by determining the difference between the foreign market value and United States price of the imported merchandise. Upon the request of an interested party, the Secretary must hold a hearing regarding his review and determination of antidumping duties. These procedures are designed to facilitate the speedy assessment of antidumping duties and to provide designated parties a greater role in these determinations. See H. Rept. No. 96–317, 96th Cong., 1st sess. 72 (1979); S. Rept. No. 96–249, 96th Cong., 1st sess. 80–81 (1979). It is to be added that these determinations are subject to judicial review under section 516A of the Tariff Act of 1930, as amended (19 U.S.C. 1516a).

There is no conflict between the procedures required by section 751 and those required by section 617. Under section 617 before the Secretary may settle a claim, he must receive a report from the Government official having charge of the claim showing "the facts upon which [the] claim is based, the probabilities of a recovery and the terms upon which the [claim] may be compromised * * *." Upon receipt of this report, and upon the recommendation of the General Counsel of the Department of Commerce that the claim be compromised, the Secretary may settle the claim. Any person adversely affected by the decision to settle may then seek judicial review of the Secretary's action. Considering that judicial review is thus available and that settlement may expedite the collection of antidumping duties, these procedures do not frustrate the congressional purpose underlying section 751.

In sum, sections 617 and 751 are separate and distinct statutes. Nothing in the terms or the legislative history of section 751 in any way refers or relates to, much less derogates from, the Secretary's authority under section 617. Clearly, had Congress intended that the authority contained in section 617 be modified in any way by the Trade Agreements Act of 1979, it would have so stated. Given these facts, the court cannot agree with plaintiff's contention to the effect

---

and shall publish the results of such review, together with notice of any * * * estimated duty to be deposited * * * in the Federal Register

(2) *Determination of antidumping duties.*—For the purpose of par. (1)(B), the administering authority shall determine—

(A) the foreign market value and U.S. price of each entry of merchandise subject to the antidumping duty order and included within that determination, and

(B) the amount, if any, by which the foreign market value of each such entry exceeds the U.S. price of the entry.

The administering authority, without revealing confidential information, shall publish notice of the results of the determination of antidumping duties in the Federal Register, and that determination shall be the basis for the assessment of antidumping duties on entries of the merchandise included within the determination and for deposits of estimated duties.

* * * * * * *

(d) *Hearings.*—Whenever the administering authority or the Commission conducts a review under this section it shall, upon the request of any interested party, hold a hearing in accordance with sec. 774(b) in connection with that review.

that Congress impliedly limited the scope of section 617 when it enacted section 751 into law.

In view of the foregoing, plaintiff's motion for partial summary judgment on its first cause of action is denied; defendant's cross-motion for summary judgment is granted as to plaintiff's first cause of action and denied without prejudice as to plaintiff's second cause of action for the reasons stated in this court's memorandum and order of December 9, 1980. See note 5, supra.

(Slip Op. 81–20)

INTER PACIFIC CORPORATION, PLAINTIFF *v.* UNITED STATES OF AMERICA; THE SECRETARY OF THE TREASURY; THE COMMISSIONER OF CUSTOMS, U.S. CUSTOMS SERVICE; REGIONAL COMMISSIONER OF CUSTOMS, U.S. CUSTOMS SERVICE, REGION VI; DISTRICT DIRECTOR OF CUSTOMS, U.S. CUSTOMS SERVICE, HOUSTON, TEXAS, AND SANTINI BROTHERS, INC., DEFENDANTS

Court No. 81–2–00206

Temporary Restraining Order and Order to Show Cause Why a Preliminary Injunction Should Not Issue

MALETZ, Judge:

Upon reading and filing the verified complaint herein together with Motion for Temporary Restraining Order and Preliminary Injunction against the defendants, for the purpose of restraining them from making further charges to the plaintiff and immediately enjoining them from continuing to refuse to release the plaintiff's merchandise from their custody; together with plaintiff's written and oral statements and affidavit in support thereof the court finds that in order to preserve the status quo of the parties the court should exercise its equitable powers.

This order is entered to avoid injury to plaintiff in the form of charges for storage incurred after the institution of this proceeding. Payment of such charges could cause irreparable harm to plaintiff who has submitted, by sworn statement, an inability to pay the amounts defendant state are required to be deposited for release of the subject merchandise and amounts that could otherwise accrue subsequent to the date of this order. A certificate of notice has been filed by plaintiff stating that constructive notice was given to defendant Santini Brothers of the plaintiff's intention to file this action and request a temporary restraining order. Actual notice has been had on the United States. A brief informal conference with counsel for

plaintiff and counsel for defendant United States has been held in the court's chambers this date. This order shall issue without additional prior notice to the parties to establish the status quo pending further proceedings. It appearing to the court that the record supports the plaintiff's request for a temporary restraining order it is therefore,

Ordered:

1. That the defendants named in this action and each of them are hereby temporarily restrained from accruing further charges against the plaintiff for the storage of the merchandise in this action pending a hearing on the plaintiff's motion for a preliminary injunction, and;

2. A certified copy of this order, together with a copy of the summons, verified complaint and other pleadings be supplied forthwith to the U.S. marshal for the earliest possible service on the defendants, for such services not later than 5 p.m. on the 4th day of March 1981, and;

3. The defendants will appear before the Honorable Morgan Ford, Judge of the U.S. Court of International Trade, on March 5, 1981, at 10:30 a.m., or as soon thereafter as counsel may be heard in the U.S. Court of International Trade, One Federal Plaza, New York, N.Y. 10007, and show cause why the aforesaid preliminary injunction should not issue.

Decisions of the United States Court of International Trade

Abstracts

Abstracted Protest Decisions

DEPARTMENT OF THE TREASURY, *March 2, 1981.*

The following abstracts of decisions of the United States Court of International Trade at New York are published for the information and guidance of officers of the customs and others concerned. Although the decisions are not of sufficient general interest to print in full, the summary herein given will be of assistance to customs officials in easily locating cases and tracing important facts.

WILLIAM T. ARCHEY,
Acting Commissioner of Customs.

DECISION NUMBER	JUDGE & DATE OF DECISION	PLAINTIFF	COURT NO.	ASSESSED	HELD	BASIS	PORT OF ENTRY AND MERCHANDISE
				Par. or Item No. and Rate	Par. or Item No. and Rate		
P81/23	Richardson, J. February 25, 1981	Alltransport, Inc.	78-8-01542	Item 708.89 22.5%	Item 708.80 15%	Wild Heerbrugg Instruments, Inc. v. U.S. (C.D. 4767)	New York Phototubes
P81/24	Boe, J. February 25, 1981	Kyocera International, Inc.	77-12-04806	Item 720.65 $0.37 per substrate (group A items) Item 720.44 25% (group B items)	Item 535.14 15% (group A items) Item 685.90 8.5% (group B items)	Texas Instruments, Inc. v. U.S. (C.D.'s 4810, 4811)	San Francisco Blank ceramic substrates (group A items); metalized ceramic substrates adapted to receive light emitting diodes (LED's) but not adapted to receive an integrated circuit chip (group B items), set forth in schedule attached to decision and judgment

Decision of the United States Court of International Trade

Abstracts

Abstracted Reappraisement Decision

DECISION NUMBER	JUDGE & DATE OF DECISION	PLAINTIFF	COURT NO.	BASIS OF VALUATION	HELD VALUE	BASIS	PORT OF ENTRY AND MERCHANDISE
R81/78	Re, C.J. February 25, 1981	Asea Inc.	76-2-00516	Export value	Equal to invoiced unit prices, net packed, as set forth in entries and invoices	C.B.S. Imports Corp. v. U.S. (C.D. 4739)	New Orleans Electrical equipment and apparatus

Judgment of the U. S. Court of International Trade in Appealed Cases

FEBRUARY 23, 1981

APPEAL 80–27.—Norman G. Jensen, Inc., a/c Calhoun's Collectors Society, Inc. v. United States.—STAFFA STAMPS—ARTICLES OF GOLD—POSTAGE STAMPS—PRINTED MATTER—PRESSURE SENSITIVE FLAT STRIPS OR FORMS—GOLD LEAF, MOUNTED—TSUS.—C.D. 4846 affirmed November 6, 1980 (C.A.D. 1255).

International Trade Commission Notices

Investigations by the U.S. International Trade Commission

DEPARTMENT OF THE TREASURY

The appended notices relating to investigations by the U.S. International Trade Commission are published for the information of Customs officers and others concerned.

R. E. CHASEN,
Commissioner of Customs.

(19 CFR Part 207) Investigation No. 751–TA–3

POTASSIUM CHLORIDE FROM CANADA

Notice of Denial of Petition To Expand the Scope of the Investigation

AGENCY: U.S. International Trade Commission.

ACTION: Denial of petition to expand scope of investigation No. 751–TA–3 on potassium chloride from Canada.

SUMMARY: This action notifies all interested persons of the denial of a petition filed on behalf of PPG Industries Canada Ltd., Kalium Division (PPG), requesting the Commission to expand the scope of investigation No. 751–TA–3 to include all exporters of potassium chloride from Canada currently covered by T.D. 69–265, the dumping finding at issue in this case. (T D. 69–265 was originally published at 34 F.R. 19904 (Dec. 19, 1969).) The scope of the Commission review investigation of potassium chloride covers all Canadian producers of potassium chloride that have not previously been excluded from the scope of the order. It is the understanding of the Commission, at this time, that Texasgulf, Inc., is the only Canadian producer so situated.

U.S. Borax & Chemical Co. was exempted from the original finding when published in 1969; it was never covered by the order. The following companies—AMAX Potash, Ltd.; Brockville Chemical Industries,

Ltd.; Central Canada Potash Co., Ltd.; Cominco, Ltd.; CF Industries, Inc.; Duval Corp. of Canada; Hudson Bay Mining & Smelting Co., Ltd.; International Minerals & Chemicals Corp.; PPG Industries Canada Ltd., Kalium Division; Potash Co. of America; Potash Co. of Canada; Potash Co. of Saskatchewan; and Swift Canadian Co., Ltd.—were originally covered by the order; however, they have subsequently been excluded from the scope of the order by the Department of the Treasury (the administering authority of the dumping statute prior to the passage of the Trade Agreements Act of 1979).

To qualify for an exclusion, the administering authority requires that a company demonstrate that any sales at less than fair value have been terminated for a substantial period of time, and that the company provide the administering authority with assurances that future sales will not be at less than fair value. 19 CFR 153.44.

PPG's petition was based entirely on the assumption that the companies excluded from the purview of T.D. 69–265 after providing the administering authority with assurances remain, nonetheless, subject to the order. PPG posited that the exclusion with assurances from the order was not a revocation of the T.D. 69–265; rather, it was a conditional revocation of a portion of the antidumping order, or a conditional exclusion from the order.

According to information received by the Commission staff from the U.S. Department of Commerce (the administering authority since the passage of the Trade Agreements Act of 1979), this premise is not correct. Commerce informed the Commission staff that it considers the exclusion of a company from an antidumping order, based on the absence of LTFV sales and pricing assurances, to be a revocation of the order as to that company, i.e., a partial revocation of the order. The absence of LTFV sales and the assurances are preconditions for qualification for a revocation, and no more. Commerce does not distinguish between an exclusion with assurances and a revocation.

In light of the information provided by Commerce to the Commission, the arguments and concerns expressed in PPG's petition become moot. Accordingly, the Commission denied PPG's request expand the scope of investigation No. 751–TA–3 on potassium chloride from Canada.

FOR FURTHER INFORMATION CONTACT: Jane Albrecht, Esq., U.S. International Trade Commission, 701 E Street NW., Washington, D.C. 20436; telephone 202–523–1627.

By order of the Commission.

Issued: March 3, 1981.

KENNETH R. MASON,
Secretary.

In the Matter of CERTAIN SHELL BRIM HATS	Investigation No. 337–TA–86

Notice of Commission Request for Comments Concerning Consent Order Agreement

AGENCY: U.S. International Trade Commission.

ACTION: Request for public comment on proposed consent order agreement.

SUMMARY: Commission acceptance of the consent order agreement that appears in full below would result in termination of this investigation. This notice request comments on the agreement within 30 days.

DATES: Comments will be considered if received within 30 days of this notice. Comments should conform with Commission rule 201.8 (19 CFR 201.8) and should be addressed to Kenneth R. Mason, Secretary, U.S. International Trade Commission, 701 E Street NW., Washington, D.C. 20436.

FOR FURTHER INFORMATION CONTACT: Jeffrey S. Neeley, Esq., Office of the General Counsel, U.S. International Trade Commission, 701 E Street NW., Washington, D.C. 20436; telephone 202–523–0359.

SUPPLEMENTARY INFORMATION: In connection with the Commission's investigation under section 337 of the Tariff Act of 1930 (19 U.S.C. 1337) of alleged unfair methods of competition and unfair acts in the importation or sale of certain shell brim hats in the United States, the complainant and the Commission investigative attorney on January 22, 1981, moved to terminate this investigation on the basis of a consent order agreement (Motion No. 86–3). On February 4, 1981, the administrative law judge to which the case was assigned issued his recommendation that the Commission accept the consent order agreement and terminate the investigation. The consent order agreement printed below contains certain technical amendments that have not been reviewed by the ALJ.

The full text of the consent order agreement appears below:

CONSENT ORDER AGREEMENT

I. RECITALS

Zwicker Knitting Mills (complainant) filed a complaint (the complaint) on May 4, 1980, with the U.S. International Trade Commission (Commission) under section 337 of the Tariff Act of 1930 (19 U.S.C. 1337) (sec. 337).

The Commission, having determined that it has jurisdiction over the subject matter alleged in the complaint and that the complaint states a cause of action under section 337, instituted investigation No. 337–TA–86, on June 20, 1980, and published a Notice of Investigation (45 F.R. 42894, June 25, 1980) to that effect.

The subject matter of this investigation is the alleged importation and sale by Aris-Isotoner Gloves, Inc., and Aris (Philippines), Inc. (collectively respondents) of certain shell brim hats alleged to infringe the claims of U.S. Letters Patent 3,898,699 ('699 patent) owned by complainant, with the alleged effect or tendency to destroy or substantially injure an industry efficiently and economically operated in the United States.

Complainant and respondents desire to resolve the issues involved in the investigation before the ruling by the Commission on any findings of fact or conclusions of law and before the hearing or adjudication of any issue of fact or law related thereto.

M. Brooke Murdock is the Commission investigative attorney for the U.S. International Trade Commission appointed in the Notice of Investigation and represents the Commission as a party to this investigation.

II. AGREEMENT

Now therefore in consideration of the foregoing, complainant, respondents, and the Commission investigative attorney, subject to approval by the Commission, agree to entry by the Commission of the following order.

It is hereby ordered that:

1. *Jurisdiction.*—The Commission has, and respondents concede that the Commission has jurisdiction of the subject matter of investigation and jurisdiction over respondents for purposes of issuing and enforcing this Consent Order.

2. *Settlement purposes only.*—This consent order is for settlement purposes only and does not constitute a determination by the Commission or an admission by respondents that section 337 has been violated as alleged in the complaint or Notice of Investigation, that there has been an infringement of U.S. Patent No. 3,898,699, owned by the complainant, or that said patent is valid in law.

3. *Applicability.*—This consent order shall apply to respondents, singly and jointly, and to their respective officers, directors, employees, successors or assigns.

4. *Conduct prohibited.*—The respondents agree not to import or cause to be imported the shell brim hat product of the type which has been offered for sale and/or sold by the respondent as shown in exhibit 6 attached to the complaint as filed.

5. *Service of consent order.*—Respondents shall serve, within 30 days after the effective date of this consent order, a copy of this consent order upon each of its officers and directors.

6. *Modification.*—Any of the parties to this consent order may apply to the Commission at any time for such futher orders and directions as may be necessary or appropriate for the construction or carrying out of this consent order, for the amendment or modification of any of the provisions hereof, or for the enforcement or compliance herewith.

7. *Violations.*—Any violation of this consent order may result in proceedings before the Commission to determine what, if any, action should be taken with respect to such violation including, an exclusion order, cease and desist order and possible fines.

If the Commission receives written notice that respondent is not complying with the consent order the Commission reserves the right to require the respondents to provide documents including, but not limited to, invoices, books and records, as requested by the Commission which relate to compliance or lack of compliance with this order as applies to the importation of the subject hats.

8. *Waiver.*—The parties waive (1) further procedural requirements including the requirement that the Commission make a determination under section 337, (2) judicial review of this consent order, such waiver not to include any final order made by the Commission as to compliance as referred to in section 7, (3) any requirement that the Commission decision contain findings of fact and conclusions of law, and (4) any other challenge or contest to the validity of this consent order, such waiver not to include any final order made by the Commission as to compliance referred to in section 7.

9. *Termination.*—This investigation is hereby terminated.

COMMENTS REQUESTED: In light of the Commission's duty to consider the public interest in its investigation, the Commission requests written comments from persons concerning the effect of the termination of this investigation based upon the consent order agreement upon: (1) The public health and welfare, (2) competitive conditions in the U.S. economy, (3) the production of like or directly competitive articles in the United States, and (4) U.S. consumers. These written comments must be filed with the Secretary to the Commission no later than 30 days after publication of this notice in the Federal Register. The Commission will consider requests for oral argument or oral presentation on this matter if such requests are received in the Office of the Secretary not later than 15 days after publication of this notice in the Federal Register. Any person desiring to submit a document (or portion thereof) to the Commission in con-

fidence must request in camera treatment. Such request should be directed to the Secretary and must include a full statement of the reasons why the Commission should grant such treatment. The Commission will either accept such submission in confidence or return it. All nonconfidential written submissions will be open to public inspection at the Secretary's office.

By order of the Commission.

Issued: March 2, 1981.

KENNETH R. MASON,
Secretary.

Investigation No. 731–TA–39 (Preliminary)

TUBELESS-TIRE VALVES FROM THE FEDERAL REPUBLIC OF GERMANY

Notice of Institution of Preliminary Antidumping Investigation and Scheduling of Conference

AGENCY: U.S. International Trade Commission.

ACTION: Institution of preliminary antidumping investigation to determine whether there is a reasonable indication that an industry in the United States is materially injured, or is threatened with material injury, or the establishment of an industry is materially retarded, by reason of imports from the Federal Republic of Germany of tubeless-tire valves allegedly sold or likely to be sold at less than fair value. For the purposes of this investigation, the term "tubeless-tire valve" means any tubeless-tire valve suitable for use with passenger automobile and light truck wheels,[1] provided for in item 692.32 of the Tariff Schedules of the United States.

EFFECTIVE DATE: February 24, 1981.

FOR FURTHER INFORMATION CONTACT: John MacHatton, Supervisory Investigator; 202–523–0439.

SUPPLEMENTARY INFORMATION:

BACKGROUND

This investigation is being instituted following receipt of a petition on February 24, 1981, filed by Nylo-Flex Manufacturing Co., Inc., Mobile, Ala. The petition requested the imposition of additional duties in an amount equal to the amount by which the foreign market value exceeds the U.S. price of tubeless-tire valves imported from the Federal Republic of Germany.

---

[1] Light trucks are defined, for purposes of this investigation, as trucks having a gross vehicle weight (GVW) of 10,000 pounds or less.

AUTHORITY

Section 733(a) of the Tariff Act of 1930 (19 U.S.C. 1673b(a)) requires the Commission to make a determination of whether there is a reasonable indication that an industry in the United States in materially injured, or is threatened with material injury, or the establishment of an industry in the United States is materially retarded, by reason of imports of the merchandise which is the subject of the investigation by the administering authority. Such a determination must be made within 45 days after the date on which a petition is filed under section 732(b) or on which notice is received from the Department of Commerce of an investigation commenced under section 732(a). Accordingly, the Commission, on March 3, 1981, instituted preliminary antidumping investigation No. 731–TA–39. This investigation will be subject to the provisions of part 207 of the Commission's Rules of Practice and Procedure (19 CFR 207, 44 F.R. 76457) and particularly subpart B thereof.

WRITTEN SUBMISSIONS

Any person may submit a written statement of information pertinent to the subject matter of this investigation to the Commission on or before March 23, 1981. A signed original and 19 copies of such statements must be submitted.

Any business information which a submitter desires the Commission to treat as confidential shall be submitted separately and each sheet must be clearly marked at the top Confidential Business Data. Confidential submissions must conform with the requirements of section 201.6 of the Commission's Rules of Practice and Procedure (19 CFR 201.6). All written submissions, except for confidential business data, will be available for public inspection.

CONFERENCE

The Director of Operations of the Commission has scheduled a conference in connection with this investigation for 10 a.m., e.s.t., on March 17, 1981, at the U.S. International Trade Commission Building, 701 E Street NW., Washington, D.C. Parties wishing to participate in the conference should contact the supervisory investigator for the investigation, Mr. John MacHatton; 202–523–0439. It is anticipated that parties in support of the petition for antidumping duties and parties opposed to such petition will each be collectively allocated one hour within which to make an oral presentation at the conference. Further details concerning the conduct of the conference will be provided by the supervisory investigator.

INSPECTION OF PETITION

The petition filed in this case is available for public inspection at the Office of the Secretary, U.S. International Trade Commission.

By order of the Commission.

Issued: March 4, 1981.

KENNETH R. MASON,
Secretary.

In the Matter of CERTAIN SLIDE FASTNER STRINGERS AND MACHINES AND COMPONENTS THEREOF FOR PRODUCING SUCH SLIDE FASTNER STRINGERS	Investigation No. 337–TA–85

Notice of Termination of Investigation

AGENCY: U.S. International Trade Commission.

ACTION: Termination of investigation.

SUMMARY: Having reviewed the record of the investigation and the recommendation of the presiding officer, the Commission has voted to grant Motion Docket No. 85–7 and has ordered the termination of investigation No. 337–TA–85, "Certain Slide Fastener Stringers and Machines and Components Thereof for Producing Such Slide Fastener Stringers," as to all issues and all respondents.

PETITIONS FOR RECONSIDERATION: Any party wishing to petition for reconsideration of the Commission's action must do so within 14 days after service of the Commission's action and order. Such petitions must be in conformity with section 210.56 of the Commission's Rules of Practice and Procedure (19 CFR 210.56).

SUPPLEMENTAL INFORMATION: This investigation was instituted on June 13, 1980 (45 F.R. 40242), following receipt of a complaint filed on behalf of Talon Division of Textron, Inc., a manufacturer of slide fastener stringers and machines and components thereof for producing such slide fastener stringers. The complaint alleged the violation of section 337 of the Tariff Act of 1930 with respect to the importation into the United States and sale of certain slide fastener stringers which were alleged to infringe claim 1 of U.S. Letters Patent 3,143,779, and of certain machines and components thereof for producing such slide fastener stringers which were alleged to infringe claim 5 of U.S. Letters Patent 3,123,103. Named as respondents were Yoshida Kogyo K.K. and Y.K.K. (USA), Inc.

The complaint, inter alia, requested that the Commission issue an order excluding the subject goods from importation into the United States during the pendency of the investigation. On August 21, 1980, the Commission voted to deny such temporary relief. In light of this vote and the impending expiration dates of the patents in issue, the parties concluded that the public interest could not be served by further pursuit of this investigation. Therefore, on December 5, 1980, they moved to terminate this investigation (Motion Docket No. 85–7). The presiding officer has recommended that the motion be granted and that the investigation be terminated.

ADDITIONAL INFORMATION: The Commission's action and order, and all other public documents on the record of this investigation are available for public inspection during official business hours (8:45 a.m. to 5:15 p.m.) at the Office of the Secretary, U.S. International Trade Commission, 701 E Street NW., room 156, Washington, D.C. 20436; telephone 202–523–0161.

FOR FURTHER INFORMATION CONTACT: Scott Daniels, Esq., Office of the General Counsel, U.S. International Trade Commission, 701 E Street NW., room 226, Washington, D.C. 20436; telephone 202–523–0480.

By order of the Commission.

Issued: March 3, 1981.

KENNETH R. MASON,
Secretary.

In the Matter of	Investigation No.
CERTAIN MULTICELLULAR PLASTIC FILM	337–TA–54A

Commission Action and Order

BACKGROUND

The U.S. International Trade Commission conducted investigation No. 337–TA–54A, pursuant to section 337 of the Tariff Act of 1930 (19 U.S.C. 1337), to determine whether the process used by Huang Well Industrial Co., Ltd., of Taipei, Taiwan, to manufacture multicellular plastic film abroad would, if practiced in the United States, infringe claims 1 or 2 of U.S. Letters Patent 3,416,984.

ACTION

Having reviewed the record in this matter, the Commission on February 27, 1981, determined that the Huang Well process, if

practiced in the United States, would not infringe claims 1 or 2 of U.S. Letters Patent 3,416,984.

ORDER

Accordingly, it is hereby ordered that—

1. Investigation No. 337–TA–54A is terminated as to all issues and all parties based on the Commission's determination that the process used by Huang Well Industrial Co., Ltd., to manufacture multicellular plastic film would, if practiced in the United States, not infringe claim 1 or 2 of U.S. Letters Patent 3,416,984; and

2. This action and order be published in the Federal Register and served, on each party of record in this investigation and upon the U.S. Department of Health and Human Services, U.S. Department of Justice, the Federal Trade Commission, and the U.S. Customs Service.

By order of the Commission.

Issued: March 3, 1981.

KENNETH R. MASON,
Secretary.

In the Matter of CERTAIN COIN-OPERATED AUDIO-VISUAL GAMES AND COMPONENTS THEREOF	Investigation No. 337–TA–87

Notice of Termination of Universal Co., LTD., Universal U.S.A., Inc., and Sunrise New Sound, Inc., as Respondents

AGENCY: U.S. International Trade Commission.

ACTION: Termination of Universal Co., Ltd., Universal U.S.A., Inc., and Sunrise New Sound. Inc., as party respondents in the above-captioned investigation.

SUMMARY: Having determined that this matter is properly before the Commission and having reviewed the record in this investigation, including the recommendation of the presiding officer, the joint motion to terminate (Motion No. 87–15), and papers in support thereof, the Commission on March 3, 1981, granted a motion to terminate Universal Co., Ltd., Universal U.S.A., Inc., and Sunrise New Sound, Inc., as party respondents in investigation No. 337–TA–87.

SUPPLEMENTARY INFORMATION: This investigation is being conducted under the authority of section 337 of the Tariff Act of 1930 (19 U.S.C. 1337) and concerns alleged unfair trade practices in the

importation into and sale in the United States of certain coin-operated audio-visual games and components thereof. The complainant, Midway Manufacturing Co., and respondents, Universal Co., Ltd., Universal U.S.A., Inc., and Sunrise New Sound, Inc., jointly moved to terminate the investigation as to the above-named respondents on the basis of a license agreement entered into on October 10, 1980. The presiding officer certified the motion to the Commission on November 24, 1980, with her recommendation that it be granted. The Commission then published for comment in the Federal Register notice of the motion to terminate and a nonconfidential version of the settlement agreement forming the basis therefore.

Any party wishing to petition for reconsideration of the Commission's action must do so within 14 days of service of the Commission's action and order. Such petitions must be in accord with Commission rule 210.56 (19 C.F.R. 210.56).

Copies of the Commission's action and order in this matter and any other public documents in this investigation are available to the public during official working hours (8:45 a.m. to 5:15 p.m.) in the Office of the Secretary, U.S. International Trade Commission, 701 E Street NW., Washington, D.C. 20436; telephone 202–523–0161.

FOR FURTHER INFORMATION CONTACT: Clarease E. Mitchell, Esq., Office of the General Counsel. U.S. International Trade Commission, 701 E Street NW., Washington, D.C. 20436; telephone 202–523–0148.

By order of the Commission.

Issued: March 5, 1981.

KENNETH R. MASON,
Secretary.

Investigation No. 22–43

CERTAIN TOBACCO

AGENCY: U.S. International Trade Commission.

ACTION: Institution of an investigation under section 22(a) of the Agricultural Adjustment Act (7 U.S.C. 624(a)) to determine whether tobacco, currently provided for in items 170.3210, 170.3500, 170.6040, and 170.8045 of the Tariff Schedules of the United States Annotated (TSUSA), is being or is practically certain to be imported into the United States under such conditions and in such quantities as to render or tend to render ineffective, or materially interfere with, the tobacco program of the Department of Agriculture, or to reduce substantially the amount of any product being processed in the United States from such domestic tobacco.

EFFECTIVE DATE: March 5, 1981.

FOR FURTHER INFORMATION CONTACT: Mr. William Lipovsky; 202–724–0097.

SUPPLEMENTARY INFORMATION:

BACKGROUND

The current investigation (No. 22–43) is being instituted following receipt of a letter dated January 18, 1981, from the President requesting that the Commission make an investigation under section 22 of the Agricultural Adjustment Act to determine whether the above-described tobacco is being, or is practically certain to be, imported under such conditions and in such quantities as to render or tend to render ineffective, or materially interfere with, the tobacco program of the Department of Agriculture, or to reduce substantially the amount of any product being processed in the United States from such domestic tobacco, and to report its findings and recommendations to the President at the earliest practicable date.

PREHEARING PROCEDURES

To facilitate the hearing process, it is requested that persons wishing to appear at the hearing submit prehearing briefs enumerating and discussing the issues which they wish to raise at the hearing. Nineteen copies of such prehearing briefs should be submitted to the Secretary to the Commission no later than the close of business on May 5, 1981. Copies of any prehearing briefs submitted will be available for public inspection in the Office of the Secretary. While submission of prehearing briefs does not prohibit submission of prepared statements in accordance with section 201.12(d) of the Commission's Rules of Practice and Procedure (19 CFR 201.12(d)), it is unnecessary to submit such a statement if a prehearing brief is submitted instead. Oral presentations should, to the extent possible, be limited to issues raised in the prehearing briefs.

A prehearing conference will be held on Thursday, April 23, 1981, at 9 a.m., e.s.t., in room 117 of the U.S. International Trade Commission Building.

Persons not represented by counsel or public officials who have relevant matters to present may give testimony without regard to the suggested prehearing procedures outlined above.

PUBLIC HEARING

The Commission will hold a public hearing in connection with this investigation beginning at 10 a.m., e.d.t., on May 11, 1981, in the

Hearing Room of the U.S. International Trade Commission Building, 701 E Street NW., Washington, D.C. Requests to appear at the hearing should be filed in writing with the Secretary to the Commission not later than the close of business (5:15 p.m., e.s.t.) on April 22, 1981. For further information concerning the conduct of the investigation, hearing procedures, and rules of general application, consult the Commission's Rules of Practice and Procedure, part 204 (19 CFR 204) and part 201 (19 CFR 201).

WRITTEN SUBMISSIONS

In addition to or in lieu of an appearance at the hearing, interested persons may submit to the Commission a written statement of information pertinent to the subject matter of this investigation. Written statements should be addressed to the Secretary to the Commission, 701 E Street NW., Washington, D.C. 20436, and must be received not later than May 18, 1981. All written submissions, except for confidential business data, will be available for public inspection.

Any business information which a submitter desires the Commission to treat as confidential must be submitted separately, and each sheet must be clearly marked at the top Confidential Business Data. Confidential submissions must conform with the requirements of section 201.6 of the Commission's Rules of Practice and Procedure (19 CFR 201.6). All written submissions, except for confidential business data, will be available for public inspection.

By order of the Commission.

Issued: March 5, 1981.

KENNETH R. MASON,
Secretary.

U.S. GOVERNMENT PRINTING OFFICE : 1981 O - 338-579

Index

U.S. Customs Service

Treasury decisions:

	T.D. No.
Bonds: Approval To Use Authorized Facsimile Signatures and Seals; T.D. 79-241 Amended	81-49
Carriers Bond	81-46
Carriers Bond	81-47
Foreign Currencies:	
Daily certified rates; February 23-27, 1981	81-50
Variances from quarterly rate; February 23-27, 1981	81-51
Recordation of Trade Name—American Machine & Tool Co. Inc	81-48
Synopses of drawback decisions	81-45
Steel in various forms; zincrometal	81-45-A
Four-wheel-drive system componentry	81-45-B
Television monitors; harnesses; switchboard assemblies etc	81-45-C
Sugar, hard refined	81-45-D
Loudspeaker parts, high fidelity	81-45-E
Diglycidal either bisphenol F resins; ethyl silicate 81 45 F Pyrogallol; Pyrogallic acid	81-45-G
Steel sheet, strips and blanks (hot and cold rolled and galvanized)	81-45-H
Piece goods, greige	81-45-I
Silicon wafers; packages; frames; lids; semi-conductor devices	81-45-J
Oleic acid, cadmium oxide; various other chemicals	81-45-K
Steel plate and blanks; castings; forgings	81-45-L
Polyester film	81-45-M
Flurandrenolide	81-45-O
Polyalkylbenzene; basic calcium sulfonate	81-45-P
Tin coil, electrolytic	81-45-Q
Tinplate, electrolytic and galvanized steel in coils and sheets	81-45-R
Plate, bar, tubing and angles, hot and cold rooled	81-45-S
Steel, galvanized in sheet and coil	81-45-T
Steel armoring wire; galvanized	81-45-U
Steel, hot and cold rolled; galvanized	81-45-V
Magnatron tubes, television picture tubes, and electronic parts and assemblies	81-45-W
Watch movements, cases, heads, and bracelets	81-45-X
Combustion gas turbines assemblies	81-45-Y
Kraft linerboard	81-45-Z

Decisions of the United States Court of Customs and Patent Appeals:	C.A.D. No.
The United States v. Sanyo Electric Inc	1258

DEPARTMENT OF THE TREASURY
U.S. CUSTOMS SERVICE
WASHINGTON, D.C. 20229

OFFICIAL BUSINESS
PENALTY FOR PRIVATE USE, $300

POSTAGE AND FEES PAID
DEPARTMENT OF THE TREASURY (CUSTOMS)
(TREAS. 552)

15/13

Customs Bulletin

Regulations, Rulings, Decisions, and Notices concerning Customs and related matters

and Decisions

of the United States Court of Customs and Patent Appeals and the United States Court of International Trade

NEWARK PUBLIC LIBRARY

APR 10 1981

U. S. GOVT. PUBS.
DEPOSITORY 376

Vol. 15 APRIL 1, 1981 No. 13

This issue contains

T.D. 81–52 through 81–57
General Notice
C.A.D. 1259 and 1260
C.A. 79–35 and 80–4
Slip. Op. 81–21
Protest Abstracts P81/25
Reap. Abstracts R81/79 through R81/87
International Trade Commission Notices

THE DEPARTMENT OF THE TREASURY
U.S. Customs Service

T1.11/3:

NOTICE

The abstracts, rulings, and notices which are issued weekly by the U.S. Customs Service are subject to correction for typographical or other printing errors. Users may notify the U.S. Customs Service, Logistics Management Division, Washington, D.C. 20229, of any such errors in order that corrections may be made before the bound volumes are published.

For sale by the Superintendent of Documents, U.S. Government Printing Office, Washington, D.C. 20402. Price: $2.25 (single copy domestic); $2.85 (single copy foreign). Subscription price: $85.00 a year domestic; $106.25 a year foreign.

U.S. Customs Service

Treasury Decisions

(T.D. 81-52)

Bonds

Approval of a carrier's bond, Customs form 3587

A bond of a carrier for the transportation of bonded merchandise has been approved as shown below. The approval of the bond is temporary until July 3, 1981.

Dated: March 12, 1981.

Name of principal and surety	Date of bond	Date of approval	Filed with district director/area director/amount
Montreal Container Terminals Inc., and C.V.S. Leasing Ltd., 6364 Notre Dame, E., Mont., PQ, Canada; motor carrier; Continental Ins. Co.	Oct. 8, 1980	Feb. 10, 1981	Ogdensburg, NY; $50,000

(BON-3-03)

MARILYN G. MORRISON,
Director,
Carriers, Drawback and Bonds Division.

(T.D. 81-53)

Synopses of Drawback Decisions

The following are synopses of drawback rates issued October 6, 1980, to November 17, 1980, inclusive, pursuant to sections 22.1 through 22.5, inclusive, Customs Regulations.

In the synopses below are listed for each drawback rate approved under 19 U.S.C. 1313(b), the name of the company, the specified articles on which drawback is authorized, the merchandise which will be used to manufacture or produce these articles, the factories where the work will be accomplished, the date the statement was signed, the

basis for determining payment, the Regional Commissioner to whom the ratewas forwarded, and the date on which it was forwarded.

(DRA-1-09)

Dated:March 11, 1981.

MARILYN G. MORRISON,
Director,
Carriers, Drawback and Bonds Division.

(A) Company: Apple Computer, Inc.
Articles: Personal minicomputers; memery boards; add-on memory.
Merchandise: Metal oxide silicon (MOS) dynamic random access memory (RAM) integrated circuits by memory capacity 4K, 8K, 16K, 32K, 64K.
Factories: Cupertino, Sunnyvale, and San Jose, Calif.; Carrollton, Tex.
Statement signed: June 24, 1980.
Basis of claim: Appearing in.
Rate forwarded to Regional Commissioner of Customs: San Francisco, October 31, 1980.

(B) Company: BASF Wyandotte Corp.
Articles: Pharmaceutical grade vitamin E acetate oil; feed grade vitamin E acetate oil; and feed grade powder (vitamin E).
Merchandise: Isophytol and trimethylhydroquinone.
Factory: Wyandotte, Mich.
Statement signed: August 22, 1980.
Basis of claim: Used in, with distribution to the products obtained in accordance with their relative value at the time of separation.
Rate forwarded to Regional Commissioner of Customs: New York, October 28, 1980.

(C) Company: Beecham Inc.
Articles: Disodium carbenicillin sterile bulk and blend; finished goods (injectables).
Merchandise: Phenyl malonic acid.
Factory: Piscataway, N.J.
Statement signed: November 19, 1979.
Basis of claim: Used in as to disodium carbenicillin sterile bulk and blend; Appearing in as to injectables.
Rate forwarded to Regional Commissioner of Customs: New York, October 6, 1980.

(D) Company: Carrier Corp.
Articles: Various refrigeration systems; air-conditioners; heat pumps; furnaces; and other various products.

Merchandise: Steel plate, sheet, and strip; turbines, aluminum tubing, sheet, and plate, discs, strip, foil; unalloyed aluminum ingot; electric motors; copper tubing and cathodes; steel casting and forgings; bearings; capacitors.
Factories: Various factories as listed in manufacturer's statement.
Statement signed: August 26, 1980.
Basis of claim: Appearing in.
Rate forwarded to Regional Commissioner of Customs: Boston, November 14, 1980.
Revokes: T.D. 78–254–D and T.D. 78–397–F.

(E) Company: Citrex, Inc.
Articles: Frozen concentrated orange juice; reconstituted orange juice; and frozen concentrated citrus drink base.
Merchandise: Concentrated orange juice for manufacturing.
Factory: San Antonio, Tex.
Statement signed: May 12, 1980.
Basis of claim: Appearing in.
Rate forwarded to Regional Commissioner of Customs: Houston, October 30, 1980.

(F) Company: Citro Florida, Inc.
Articles: Frozen concentrated orange juice; reconstituted orange juice; and frozen concentrated citrus drink base.
Merchandise: Concentrated orange juice for manufacturing.
Factories: San Antonio, Tex.; Lakeland, Fla.
Statement signed: May 12, 1980.
Basis of claim: Appearing in.
Rate forwarded to Regional Commissioners of Customs: Houston and Miami, October 30, 1980.

(G) Company: Consolidated Aluminum Co.
Articles: Photoengraving sheets, mill finish.
Merchandise: Unalloyed, primary magnesium ingots.
Factory: Madison, Ill.
Statement signed: November 1, 1979.
Basis of claim: Appearing in.
Rate forwarded to Regional Commissioners of Customs: Chicago and New Orleans, October 31, 1980.

(H) Company: B. C. Cook & Sons Enterprises, Inc.
Articles: Frozen concentrated orange juice; reconstituted orange juice; and frozen concentrated citrus drink base.
Merchandise: Concentrated orange juice for manufacturing.

Factory: Lakeland, Fla.
Statement signed: February 26, 1980.
Basis of claim: Appearing in.
Rate forwarded to Regional Commissioner of Customs: Miami, October 30, 1980.

(I) Company: Cook's Processing, Inc.
Articles: Frozen concentrated orange juice; reconstituted orange juice; and frozen concentrated citrus drink base.
Merchandise: Concentrated orange juice for manufacturing.
Factory: Lakeland, Fla.
Statement signed: February 26, 1980.
Basis of claim: Appearing in.
Rate forwarded to Regional Commissioner of Customs: Miami, October 30, 1980.

(J) Company: Crystal Technology, Inc.
Articles: Crystal wafers.
Merchandise: Niobium pentoxide (columbium pentoxide).
Factory: Palo Alto, Calif.
Statement signed: May 23, 1980.
Basis of claim: Used in.
Rate forwarded to Regional Commissioner of Customs: San Francisco, October 31, 1980.

(K) Company: The Donovan Wire & Iron Co.
Articles: Steel stampings and steel tubing.
Merchandise: Hot rolled steel sheets in coil; hot rolled steel bands; cold rolled steel sheets in coil; galvanized steel coils.
Factories: Toledo, Perrysburg, and Fayette, Ohio; Clinton, Iowa.
Statement signed: October 23, 1980.
Basis of claim: Used in, less valuable waste.
Rate issued by Regional Commissioner of Customs in accordance with section 22.4(o)(2): Chicago, November 17, 1980.
Revokes: T.D. 80–245–E.

(L) Company: Eli Lilly and Co.
Articles: Cefaclor monohydrate in bulk; product formulations of Ceclor.
Merchandise: D-alpha phenylglycine levorotatory; dimethyl formamide; triethylamine; semicarbazide hydrochloride; methyl acetoacetate; penicillin V potassium intermediate; cefaclor intermediate; P-nitrobenzyl bromide.
Factories: Lafayette, Clinton and Indianapolis, Ind.

Statement signed: February 19, 1980.
Basis of claim: Used in.
Rate forwarded to Regional Commissioner of Customs: Chicago, October 21, 1980.

(M) Company: Fedders Automotive Components Co., a division of Fedders Corp.
Articles: Automobile radiators, car heaters, and various other products.
Merchandise: Brass strip, copper strip.
Factory: Buffalo, N.Y.
Statement signed: July 25, 1980.
Basis of claim: Appearing in.
Rate forwarded to Regional Commissioner of Customs: New York, October 31, 1980.

(N) Company: Ford Motor Co.
Articles: Automobiles and trucks.
Merchandise: Automobile and truck radios.
Factories: Various factories as listed in manufacturer's statement.
Statement signed: August 1, 1980.
Basis of claim: Appearing in.
Rate forwarded to Regional Commissioner of Customs: Chicago, November 17, 1980.

(O) Company: Ingersoll Products Corp.
Articles: Steel discs.
Merchandise: Hot rolled steel coil.
Factory: Chicago, Ill.
Statement signed: October 20, 1980.
Basis of claim: Used in, less valuable waste.
Rate issued by Regional Commissioner of Customs in accordance with section 22.4(o)(2): Chicago, November 14, 1980.
Revokes: T.D. 78–397–C to cover successorship from Borg Warner Corp., Ingersoll Products Division.

(P) Company: Magnetic Peripherals Inc.
Articles: Phoenix cartridge module drive.
Merchandise: Memory spindle for computer system.
Factories: Oklahoma City, Okla. (4)
Statement signed: October 7, 1980.
Basis of claim: Appearing in.
Rate forwarded to Regional Commissioner of Customs: Chicago, October 31, 1980.

(Q) Company: Monsanto Co.
Articles: Santoflex® products.

Merchandise: 4-nitrodiphenylamine.
Factory: Sauget, Ill.
Statement signed: September 2, 1980.
Basis of claim: Used in.
Rate forwarded to Regional Commissioners of Customs: Chicago and New York, October 14, 1980.

(R) Company: Mostek Corp.
Articles: Finished semiconductor devices.
Merchandise: Unfinished semiconductor assemblies.
Factories: Carrollton, Tex.; Colorado Springs, Colo.
Statement signed: June 18, 1980.
Basis of claim: Appearing in.
Rate forwarded to Regional Commissioner of Customs: San Francisco, October 14, 1980.

(S) Company: Mostek Corp.
Articles: Semiconductor device, 32K access memory.
Merchandise: Semiconductor device, 16K access memory; 18 lead substrates.
Factories: Colorado Springs, Colo.; Carrollton, Tex.
Statement signed: June 18, 1980.
Basis of claim: Appearing in.
Rate forwarded to Regional Commissioners of Customs: San Francisco and Houston, October 14, 1980.

(T) Company: Motorola, Inc.
Articles: Completed semiconductor devices.
Merchandise: Incomplete semiconductor devices.
Factories: Phoenix and Mesa, Ariz.; Austin, Tex.
Statement signed: April 10, 1980.
Basis of claim: Appearing in.
Rate forwarded to Regional Commissioners of Customs: Los Angeles and Chicago, October 14, 1980.
Revokes: T.D. 72–44–D.

(U) Company: NL Rig Equipment, Inc., a division of NL Industries, Inc.
Articles: Blowout preventers.
Merchandise: Steel castings; steel doors; ram block assemblies.
Factory: Brea, Calif.
Statement signed: March 31, 1980.
Basis of claim: Appearing in.

Rate forwarded to Regional Commissioner of Customs: Los Angeles, November 19, 1980.

(V) Company: T. H. Richards Processing Co.
Articles: Canned fruits and vegetables, fruit cocktail, fruit salads, and fruit and vegetable nectars.
Merchandise: Liquid refined sugar and hard refined sugar.
Factory: Sacramento, Calif.
Statement signed: May 9, 1980.
Basis of claim: Used in.
Rate forwarded to Regional Commissioner of Customs: San Francisco, October 6, 1980.

(W) Company: Rohm & Haas Texas Inc.
Articles: Higher methacrylates; oil additives (pour point depressants); oil additives (VI improvers).
Merchandise: Cetyl eicosyl (C16/C20) alcohol (Alfol).
Factory: Deer Park, Tex.
Statement signed: April 24, 1980.
Basis of claim: Used in.
Rate forwarded to Regional Commissioner of Customs: Baltimore, November 12, 1980.

(X) Company: Rohm & Haas Texas Inc.
Articles: Oil additives (VI improvers).
Merchandise: Isobutyl methacrylate.
Factory: Deer Park, Tex.
Statement signed: March 25, 1980.
Basis of claim: Used in.
Rate forwarded to Regional Commissioner of Customs: Baltimore, November 17, 1980.
Revokes: Section No. 46–TX, T.D. 78–227–W.

(Y) Company: Sun Crush International, Inc.
Articles: Frozen concentrated orange juice; reconstituted orange juice; and frozen concentrated citrus drink base.
Merchandise: Concentrated orange juice for manufacturing.
Factory: Lakeland, Fla.
Statement signed: February 26, 1980.
Basis of claim: Appearing in.
Rate forwarded to Regional Commissioner of Customs: Miami, October 30, 1980.

(Z) Company: Union Carbide Corp.
Articles: Ammonium paratungstate.

Merchandise: Tungsten concentrates; calcium tungstate; tungsten scrap.
Factory: Bishop, Calif.
Statement signed: January 9, 1980.
Basis of claim: Appearing in.
Rate forwarded to Regional Commissioner of Customs: New York, October 21, 1980.

Continental Oil Company operating under T.D. 67–14(1) as amended by T.C. 71–44(3) and T.D. 71–201(1) has changed its name to Conoco, Inc.

(T.D. 81–54)

Customhouse Broker License—Revocation

Revocation of Customhouse Broker's License 3605

Notice is hereby given that the Acting Assistant Secretary of the Treasury, on February 3, 1981, pursuant to section 641, Tariff Act of 1930, as amended (19 U.S.C. 1641), and part 111 of the Customs Regulations, as amended (19 CFR part 111), revoked the individual customhouse broker's license No. 3605 issued to James A Barnhart, Los Angeles, Calif., on July 1, 1964, for the Customs District of Los Angeles, Calif. The decision is effective as of February 3, 1981.

March 6, 1981.

WILLIAM T. ARCHEY,
Acting Commissioner of Customs.

(T.D. 81–55)

Bonds

Approval of carrier's bond, Customs form 3587; amendment of T.D. 80–273

T.D. 80–273 relating to the temporary approval of the carrier's bond of the following principal is hereby amended as necessary to show that such bond has been permanently approved as noted below.

Dated: March 17, 1981.

	Effective date of permanent authority
Principal: Equipment Supplies, Inc	Feb. 24, 1981

MARILYN G. MORRISON,
Director,
Carriers, Drawback and Bonds Division.

(T.D. 81-56)

Foreign Currencies—Daily Rates For Countries not on Quarterly List

Rates of exchange based on rates certified to the Secretary of the Treasury by the Federal Reserve Bank of New York for the Brazil cruzeiro, People's Republic of China yuan, Hong Kong dollar, Iran rial, Philippines peso, Singapore dollar, Thailand baht (tical), and Venezuela bolivar

The Federal Reserve Bank of New York, pursuant to section 522(c), Tariff Act of 1930, as amended (31 U.S.C. 372(c)), has certified buying rates for the dates and foreign currencies shown below. The rates of exchange, based on these buying rates, are published for the information and use of Customs officers and others concerned pursuant to part 159, subpart C, Customs Regulations (19 CFR 159, subpart C).

Brazil cruzeiro:	
March 2-6, 1981	$0.0139
People's Republic of China yuan:	
March 2, 1981	$0.613761
March 3, 1981	.607681
March 4, 1981	.610724
March 5-6, 1981	.607681
Hong Kong dollar:	
March 2, 1981	$0.186359
March 3, 1981	.186185
March 4, 1981	.186846
March 5-6, 1981	.186498
Iran rial:	
March 2-6, 1981	Not available
Philippines peso:	
March 2-6, 1981	$0.1305
Singapore dollar:	
March 2, 1981	$0.474383
March 3, 1981	.473934
March 4, 1981	.474721
March 5, 1981	.473821
March 6, 1981	.474158
Thailand baht (tical):	
March 2-3, 1981	$0.0485
March 4-5, 1981	.0488
Venezuela bolivar:	
March 2-6, 1981	$0.2329

(LIQ-03-01 O:C:E)

Dated: March 6, 1981.

GWENN KLEIN KIRSCHNER,
Acting Chief,
Customs Information Exchange.

(T.D. 81-57)

Foreign Currency—Variances From Quarterly Rate

The following rates of exchange are based upon rates certified to the Secretary of the Treasury by the Federal Reserve Bank of New York, pursuant to section 522(C), Tariff Act of 1930, as amended (31 U.S.C. 372(c)), and reflect variances of 5 per centum or more from the quarterly rate published in T.D. 81-13 for the following countries. Therefore, as to entries covering merchandise exported on the dates listed, whenever it is necessary for Customs purposes to convert such currency into currency of the United States, conversion shall be at the following rates.

Austria schilling:	
March 2, 1981	$0. 065617
March 3, 1981	.065147
March 4, 1981	.066622
March 5-6, 1981	.065833
Belgium franc:	
March 2, 1981	$0. 028385
March 3, 1981	.028249
March 4-6, 1981	.028571
Denmark krone:	
March 2, 1981	$0. 148500
March 3, 1981	.147406
March 4, 1981	.149701
March 5, 1981	.148810
March 6, 1981	.149254
Finland markka:	
March 2, 1981	$0. 242542
March 3, 1981	.241692
March 4, 1981	.245549
March 5, 1981	.244678
March 6, 1981	.242895
France franc:	
March 2, 1981	$0. 197219
March 3, 1981	.197922
March 4, 1981	.198807
March 5, 1981	.198728
March 6, 1981	.199045
Germany deutsche mark:	
March 2, 1981	$0. 464684
March 3, 1981	.464576
March 4, 1981	.467727
March 5, 1981	.467617
March 6, 1981	.468165

India rupee:	
March 2, 1981	$0. 1200
March 3–6, 1981	Quarterly
Ireland pound:	
March 2, 1981	$1. 6990
March 3, 1981	1. 6980
March 4, 1981	1. 7120
March 5, 1981	1. 7110
March 6, 1981	1. 7100
Italy lira:	
March 2, 1981	$0. 000964
March 3, 1981	. 000959
March 4, 1981	. 000971
March 5, 1981	. 000970
March 6, 1981	. 000968
Netherlands guilder:	
March 2–3, 1981	$0. 420610
March 4, 1981	. 423370
March 5, 1981	. 422833
March 6, 1981	. 423370
Norway krone:	
March 2, 1981	$0. 182732
March 3, 1981	. 182582
March 4–6, 1981	Quarterly
Portugal escudo:	
March 2, 1981	$0. 017391
March 3, 1981	. 017271
March 4, 1981	. 017590
March 5, 1981	. 017528
March 6, 1981	. 017473
Republic of South Africa rand:	
March 2, 1981	$1. 2655
March 3, 1981	1. 2730
March 4, 1981	1. 2735
March 5, 1981	1. 2715
March 6, 1981	1. 2635
Spain peseta:	
March 2, 1981	$0. 011414
March 3, 1981	. 011319
March 4, 1981	. 011581
March 5, 1981	. 011468
March 6, 1981	. 011442
Sri Lanka rupee:	
March 2–3, 1981	$0. 055710
March 4–6, 1981	. 055991

338-817 O - 81 - 2

Sweden krona:	
March 2, 1981	$0.213995
March 3, 1981	.213675
March 4, 1981	.215750
March 5, 1981	.215100
March 6, 1981	.214592
Switzerland franc:	
March 2, 1981	$0.504414
March 3, 1981	.507357
March 4, 1981	.513479
March 5, 1981	.514139
March 6, 1981	.510856
United Kingdom pound:	
March 2, 1981	$2.1805
March 3, 1981	2.2050
March 4, 1981	2.1980
March 5, 1981	2.2040
March 6, 1981	2.1925

(LIQ-03-01 O:C:E)

Dated: March 6, 1981.

GWENN KLEIN KIRSCHNER,
Acting Chief,
Customs Information Exchange.

U.S. Customs Service

General Notice

(19 CFR Part 101)

General Provisions

Proposed change in the field organization of the Customs Service
Appeal from U.S. Customs Court, C.A.D. 1259

AGENCY: U.S. Customs Service, Department of the Treasury.

ACTION: Proposed rule.

SUMMARY: This notice proposes to change the field organization of the Customs Service by establishing a new port of entry at Austin, Tex., in the Dallas/Fort Worth, Tex., Customs district (region VI). The proposed change would enable Customs to keep pace with the significant increase in Customs-related activities which has occurred in central Texas during the past decade.

DATES: Comments must be received on or before 30 days from the date of publication in the Federal Register.

ADDRESS: Comments (preferably in triplicate) may be addressed to the Commissioner of Customs, Attention: Regulations and Information Division, U.S. Customs Service, 1301 Constitution Avenue NW., Washington, D.C. 20229.

FOR FURTHER INFORMATION CONTACT: Richard C. Coleman, Office of Inspection, U.S. Customs Service, 1301 Constitution Avenue NW., Washington, D.C. 20229; 202-566-8157.

SUPPLEMENTARY INFORMATION:

BACKGROUND

Austin, the State capital of Texas, rapidly is becoming the center of international trade in central Texas. During the last decade, the area attracted many new manufacturing companies, including major electronics firms, high technology businesses, and other leading corporations producing a variety of products for distribution in markets in Europe, the Middle East, and Central and South America. In the last 5 years, the volume of merchandise imported into Austin quadrupled; the volume of merchandise exported more than tripled.

Presently, however, approximately 42 percent of imported merchandise destined for Austin is entered through the Customs port of entry at Houston, Tex., 162 miles away. Another 20 percent is entered through the Customs port of entry at San Antonio, Tex., 77 miles away. Transporting merchandise from these locations to Austin substantially increases distribution and transportation costs and delays delivery of the merchandise to its ultimate destination.

Establishing a Customs port of entry at Austin would: (1) Reduce distribution and transportation costs and reduce the traveltime for imported goods destined for Austin; (2) provide the basis for initiating scheduled international flights between Austin and foreign cities; and (3) enable Customs to obtain more efficient use of its personnel, facilities, and resources in the Austin area.

Accordingly, to keep pace with the expanding needs of Customs-related activities in central Texas and to provide better service to carriers, importers, and the public, Customs proposes to establish a new port of entry at Austin, Tex., in the Dallas/Fort Worth, Tex., Customs district (region VI). The geographical boundaries of the port would consist of all of the territory within the corporate boundaries of the city of Austin, Tex.

To accommodate the new Austin, Tex., port of entry in the Dallas/Fort Worth, Tex., Customs district, the Dallas/Fort Worth district limits also would be revised to include the State of Oklahoma, and those parts of the State of Texas lying north of latitude 32° north, and within the area north of latitude 30° north, west of 97° west longitude and east of 99° west longitude.

COMMENTS

Before adopting this proposal, consideration will be given to any written comments timely submitted to the Commissioner of Customs. Comments submitted will be available for public inspection in accordance with section 103.8(b), Customs Regulations (19 CFR 103.8(b), on regular business days between the hours of 9 a.m. to 4:30 p.m. at the Regulations and Information Division, room 2426, Headquarters, U.S. Customs Service, 1301 Constitution Avenue, Washington, D.C. 20229.

REGULATION DETERMINED TO BE NONSIGNIFICANT

In a directive published in the Federal Register on November 8, 1978 (43 FR 52120), implementing Executive Order 12044, Improving Government Regulations, the Treasury Department stated that it considers each regulation or amendment to an existing regulation published in the Federal Register and codified in the Code of Federal

Regulations to be significant. However, regulations which are non-substantive, essentially procedural, do not materially change existing or establish new policy, and do not impose substantial additional requirements or costs on, or substantially alter the legal rights or obligations of, those affected, may, with secretarial approval, be determined not to be significant. Accordingly, it has been determined that this proposed amendment does not meet the Treasury Department criteria in the directive for significant regulations.

INAPPLICABILITY OF REGULATORY FLEXIBILITY ACT

This document is not subject to the provisions of sections 603 and 604 of title 5, United States Code (as added by sec. 3 of Public Law 96–354, the Regulatory Flexibility Act), because it is not likely to have a significant economic impact upon a substantial number of small entities.

Customs routinely establishes, expands, and eliminates Customs ports of entry throughout the United States to accommodate the volume of Customs-related activity in various parts of the country. Although this proposal may have a limited effect upon some small entities in central Texas, it is not expected to be significant because the establishment of Customs ports of entry in other locations has not had a significant economic impact upon a substantial number of small entities to the extent contemplated by the Regulatory Flexibility Act.

AUTHORITY

This change is proposed under the authority vested in the President by section 1 of the act of August 1, 1914, 38 Stat. 623, as amended (19 U.S.C. 2), and delegated to the Secretary of the Treasury by Executive Order No. 10289, September 17, 1951 (3C CFR 1949–1953 Comp., ch. II), and pursuant to authority provided by Treasury Department Order No. 101–5 (46 FR 9336).

DRAFTING INFORMATION

The principal author of this document was Lawrence P. Dunham, Regulations and Information Division, Office of Regulations and Rulings, U.S. Customs Service. However, personnel from other Customs offices participated in its development.

Dated: March 3, 1981.

JOHN P. SIMPSON
Acting Assistant Secretary of the Treasury.

Decisions of the United States Court of Customs and Patent Appeals

(C.A.D. 1259)

THE UNITED STATES, APPELLANT *v.* DAVID E. PORTER, APPELLEE, NO. 80–32 (—— F. 2d ——)

1. CLASSIFICATION—RAPID TRANSIT SEATS.

Customs Court (now the Court of International Trade) decision sustaining importer's claim to classification of rapid transit seats as parts of rail vehicles under item 690.40 (TSUS) is affirmed.

2. TSUS—"PARTS" PROVISION.

Although a "parts" provision of the tariff schedules does not prevail over a specific provision for that part, it does prevail over a provision for articles, not specially provided for.

3. ID.—BASKET PROVISION.

The U.S. Tariff Commission has specifically declared that item 727.55 (TSUS) is a basket provision and the lower court characterized that item as a residual provision because of the presence of the n.s.p.f. clause in the superior heading.

4. COURT OF INTERNATIONAL TRADE—RULES—AMENDMENT OF JUDGMENT.

Rule 12.2(b) of the Court of International Trade makes clear that a judgment may, in the court's discretion, be amended to achieve a just result.

5. ID.—TIMELINESS—FEDERAL RULES OF CIVIL PROCEDURE.

Rule 12.2(b) is silent respecting the timeliness of motions thereunder; however, guidance in the resolution of the timeliness question is provided by FRCP 60(b) which is substantially similar.

6. ID.—MOTIONS TO AMEND JUDGMENT—1-YEAR LIMITATION.

In view of the 1-year limitation on similar motions to amend a judgment under FRCP 60(b), the passage of 46 days in filing a motion under rule 12.2(b) is not an unreasonable delay.

U.S. Court of Customs and Patent Appeals, March 12, 1981

Appeal from U.S. Customs Court, C.A.D. 1259

[Affirmed.]

Alice Daniel, Assistant Attorney General, *David M. Cohen*, Director, *Joseph I. Liebman*, attorney in charge, *Madeline B. Kuflik*, of counsel, for appellant.

Barry E. Cohen, attorney for appellee.

[Oral argument on February 2, 1981, by Madeline B. Kuflik for appellant and Barry E. Cohen for appellee.]

Before MARKEY, *Chief Judge*, RICH, BALDWIN, MILLER, and NIES, *Associate Judges*.

MARKEY, Chief Judge.

[1] The Government appeals from the judgment and order of the U.S. Customs Court (now the Court of International Trade),[1] sustaining David E. Porter's (Porter's) classification protest relating to imported rapid transit seats. Judge Landis held proper a classification under item 690.40 (TSUS), parts of rail vehicles or cars, disapproving the classification under item 727.55 (TSUS), furniture and parts thereof not specially provided for (n.s.p.f.). We affirm.

BACKGROUND

Passenger seats designed to be permanently bolted to the walls of rail vehicles were imported from Brazil exclusively to equip the San Francisco Bay Area Rapid Transit (BART) rail vehicles. Porter protested classification under item 727.55[2] and advanced a claim under item 690.40.[3] The United States concedes that the BART seats are parts of rail vehicles or cars, but argues that the furniture classification is the more specific and therefore controlling. Judge Landis, having found that both provisions described the merchandise, held the parts classification under item 690.40 preemptive of the residual classification under item 727.55 as a matter of law and entered summary judgment for Porter.

(The term "foregoing articles" refers to "self-propelled rail vehicles designed to carry passengers or articles" and "railroad and railway rolling stock; passenger, baggage, mail freight and other cars, not self-propelled.")

---

[1] Reported at 82 Cust. Ct. 259, C.D. 4808, 475 F. Supp. 688 (1979); an order amending the judgment is reported at 84 Cust. Ct. ——, C.D. 4857 (1980).

[2] Schedule 7, Part 4—Specified Products; Furniture, and Parts Thereof, Not Specially Provided For:

727.55	Other	10% ad val.

[3] Schedule 6, Part 6, Subpart A—Metal and Metal Products Transportation Equipment; Rail Locomotives and Rolling Stock

Parts of the Foregoing Articles

* * * * * * *

Other

* * * * * * *

690.40	Other	5.5% ad val

Forty-six days after judgment, Porter moved under Customs Court Rule 12.2 for an order amending that judgment, which was limited to transverse transit seats, to include window and longitudinal seats under the same classification alleging that his motion inadvertently failed to include window and longitudinal seats. The motion to amend being denied, Porter appealed to this court.

Finding no "substantive distinction with regard to classification of a transverse seat versus a longitudinal or window seat," this court remanded for reconsideration of the motion. Judge Landis adhered to his previous denial of the motion, but amended the judgment sua sponte to include longitudinal and window seats under item 690.40.[4] The Government has appealed the grant of summary judgment and the order amending that judgment.

ISSUES

The issue is whether error occurred in (1) holding the merchandise properly classified under item 690.40, and (2) amending the judgment to include longitudinal and window seats.

OPINION

(1) Classification

The Government argues that: (1) Headnote 1 (727.55 TSUS) evidences a specific legislative intent to include rapid transit seats within the furniture classification; and (2) if reference to Customs Service Rules of Construction were necessary to determine classification, item 727.55 (TSUS) more specifically describes the transit seats than item 690.40 (TSUS).

Porter maintains that the rapid transit seats in issue are not in the first instance classifiable under item 727.55, although if dual classification is possible, Porter contends that the "parts" provision of 690.40 is more specific and therefore prevails.

Interpretative headnote 1 (727.55 TSUS) provides in relevant part:

> For the purposes of this subpart, the term "furniture" includes movable articles of utility, designed to be placed on the floor or ground, and *used to equip* dwellings, offices, restaurants, libraries, schools, churches, hospitals, or other establishments, aircraft, vessels, *vehicles, or other means of transport*, gardens, patios, parks, or similar outdoor places, even though such articles are designed to be screwed, bolted, or otherwise fixed in place on the floor or ground; and kitchen cabinets and similar cupboards, *seats* and beds, and sectional bookcases and similar sectional furniture, *even though designed to be fixed to the wall* or to stand one on the other. * * * [Italics is ours.]

---

[4] Upon remand, the parties were requested to submit memoranda on the differences in the characteristics of transverse seats and window or longitudinal seats. The parties agreed that there are none for classification purposes.

The Government cites *Parts Manufacturing Associates, Inc.* v. *U.S.*, 73 Cust. Ct. 42, C.D. 4552, 377 F. Supp. 1356 (1974), for the proposition that item 727.55 is a specific provision for furniture and parts thereof. In *Parts Manufacturing* the Customs Court held that floor-mounted aircraft seats were properly classifiable as furniture under item 727.55, rather than parts of aircraft under item 694.60. Because the Customs Court did not consider the n.s.p.f. qualification of item 727.55 (TSUS) in reaching its ruling, Porter suggests that decision was plainly erroneous.

We do not consider *Parts Manufacturing* controlling. That case is distinguishable in that seats affixed to the floor of aircraft are specifically covered by the headnote whereas the headnote clause relating to seats affixed to walls makes no mention of vehicles. There has been no showing of any specific congressional intent to include rail vehicles or railcars under the headnote definition.

In *Albert E. Price, Inc.* v. *United States*, 60 CCPA 127, 129, C.A.D. 1095, 476 F. 2d 1354, 1356 (1973), this court discussed the relevant headnote and approvingly quoted the Customs Court opinion below [5] as follows:

> * * * [T]he headnote discussion of furniture was, on its face, intended to certify the inclusion of furniture which was permanently fastened to the premises, either on the floor *or on the walls, as opposed to furniture which was movable at will.* [Italic added.]

Other cases which concerned the scope of the headnote defining furniture are consistent with the discussion in *Price*.[6] Items determined to be beyond the scope of headnote 1 include wine racks and bars,[7] rattan chairs [8] (suspended either from the ceiling or a post extending from the wall), and motorized wheelchairs.[9] That the BART seats are designed to be fixed to a wall does not alone render the exclusion of those items from classification as furniture inconsistent with classification of the BART seats under item 727.55.

Because the Government acknowledges that the BART seats are parts of rail vehicles or cars, and are therefore within the purview of item 690.40, the appropriate analysis is directed at determination of whether item 727.55 or 690.40 shall prevail.

---

[5] *Albert E. Price, Inc.*, v. *United States*, 68 Cust. 50, C.A.D. 4334 (1972).

[6] *Arthur J. Humphreys, Packard-Bell Electronics* v. *United States*, 59 Cust. Ct. 231, C.D. 3128, 272 F. Supp. 951 (1967), aff'd, 56 CCPA 67, C.A.D. 956, 407 F. 2d 417 (1969); *Sankyodai Corp.* v. *United States*, 62 Cust. Ct. 630, C.D. 3837 (1969).

[7] *Karoware, Inc.* v. *United States*, 77 Cust. Ct. 112, C.D. 4681, 427 F. Supp. 402 (1976), aff'd, 65 CCPA 1, C.A.D. 1197, 564 F. 2d 77 (1977). Ability of wine racks and bars to be placed on the floor or hung from a wall does not satisfy the requirement that the articles be designed to be placed on the floor or fixed to the wall.

[8] *Morris Friedman* v. *United States*, 69 Cust. Ct. 184, C.D 4392, 351 F. Supp. 611 (1972). Hanging chairs were not designed to be placed on the floor or ground or to be fixed to the wall.

[9] *Abbey Rents* v. *United States*, 79 Cust. Ct. 103, C.D. 4720, 442 F. Supp. 540 (1977), aff'd, 66 CCPA 2, C.A.D. 1213, 585 F. 2d 501 (1978). In *Abbey* this court noted that no evidence presented established use of a motorized wheelchair solely as an article of furniture to the exclusion of its primary mobility function.

The statutory presumption of correctness to which classification by the Customs Service is entitled, 28 U.S.C. 2635(a), is balanced by General Interpretative Rule 10(c):

> [A]n imported article which is described in two or more provisions of the schedules is classifiable in the provision which most specifically describes it. * * *

Reviewing the status of the BART seats as parts of rail vehicles, the trial court found:

> The nature, function, and purpose of these BART seats conclusively show that they are parts of the rail vehicle. The seats are specifically designed for the BART cars and are incapable of being used for any other purpose. The seats cannot even be used as seats independent of the BART car. Once installed, the seats become an integral part of the vehicle. Finally, BART is incapable of functioning as intended without the seats.[10]

The nature, function, and purpose of the seats argue for their classification under 690.40 as parts of rail vehicles.

The trial court held that the n.s.p.f. clause in the superior heading of item 727.55 renders that item a basket provision which, as a matter of law, is inferior to the parts provision (690.40). The Government contests the significance of the n.s.p.f. clause and contends that item 727.55 is a specific provision for rapid transit seats, which is generalized by the n.s.p.f. clause only with respect to the specific materials of construction. That argument fails to recognize that the n.s.p.f. clause is found in the superior heading which precedes item 727.55 and numerous other classification items in the same furniture subpart. Item 727.55 is then further generalized by the absence of any limitation relating to materials.

[2] Further guidance in determining which of the competing tariff provisions must prevail is provided by General Interpretative Rule 10(ij), which states that "a provision for parts of an article covers a product solely or chiefly used as a part of such article, but does not prevail over a specific provision for such part."

An important and well-established corollary to rule 10(ij) is that a provision for parts is more specific than a provision for article, not specially provided for, and therefore prevails over such a basket category. "Tariff Classification Study," seventh supplemental report at 99 (U.S. Tariff Commission, 1963); *J. E. Bernard and Co., Inc.* v. *United States*, 62 Cust. Ct. 536, C.D. 3822, 299 F. Supp. 1129 (1969), aff'd, 58 CCPA 91, C.A.D. 1009 (1971).

[3] The U.S. Tariff Commission has specifically declared that "Item 727.55 is a basket provision to cover all furinture of other

---

[10] The quotation of the nature, function, and purpose of the merchandise was in reference to *Mattel Inc.* v. *United States*, 61 Cust. Ct. 75, C.D. 3531, 287 F. Supp. 999 (1968), which enunciated those considerations in determining whether an item is part of an article for tariff purposes.

materials," [11] and the Customs Court has characterized item 727.55 as a residual provision because of the presence of the n.s.p.f. clause in the superior heading. *Sankyodai* v. *United States*, *supra*; *Arthur J. Humphreys, Packard-Bell Electronics* v. *United States*, *supra*.

In *Sankyodai* the Customs Court was faced with a situation analogous to the present case. The merchandise in question was wooden seats imported for use in connection with certain domestically manufactured boats. After considering the significance of the same furniture headnote which precedes item 727.35, the court held that the seats were properly classified as parts of yachts or pleasure boats rather than as furniture of wood, not especially provided for. The Customs Court reasoned that since the merchandise could be classified under a specific tariff provision for parts of yachts or pleasure boats, classification under a residual provision was preempted as a matter of law. 62 Cust. Ct. at 633.

We find no reason to depart from the rationale of *Sankyodai* as applied by the court below. Accordingly, we affirm the grant of summary judgment to Porter, classifying the BART seats as parts of rail vehicles or cars under item 690.40 (TSUS).

(*2*) *Amendment of judgment*

Rule 12.2(b) of the Court of International Trade provides:

> *Amendment of judgments*
>
> (b) Mistakes; Inadvertence; Excusable Neglect: On motion and upon such terms as are just, the court may relieve a party or his legal representative from a final judgment, order, or proceeding for mistake, inadvertence, surprise, or excusable neglect.

[4] Rule 12.2(b) makes clear that a judgment may, in the court's discretion, be amended to achieve a just result.

The Government maintains that such discretion should be confined by the 30-day time limit of 28 U.S.C. 2639.[12] That statute deals with retrials and rehearings, and no basis is seen for equating a motion thereunder with a motion to amend like that here involved.

[5] Rule 12.2(b) is silent respecting the timeliness of a motion thereunder and the question has not previously been addressed. The first sentence of Federal Rules of Civil Procedure (FRCP) 60(b),[13]

---

[11] "Tariff Classification Study," schedule 7, p. 243 (1960).

[12] 28 U.S.C. 2639 provides:

Retrial or rehearing

The judge who has rendered a judgment or order may, upon motion of a party or upon his own motion, grant a retrial or a rehearing, as the case may be. A party's motion must be made or the judge's action on his own motion must be taken, not later than 30 days after entry of the judgment or order.

[13] FRCP 60(b), from which rule 12.2(b) was derived, provides, in pertinent part:

RULE 60. RELIEF FROM JUDGMENT OR ORDER

(b) Mistakes; Inadvertence; Excusable Neglect; Newly Discovered Evidence; Fraud, etc. On motion and upon such term. as are just, the court may relieve a party of his legal representative from a final judgment, order, or proceeding for the following reasons: (1) Mistake, inadvertence, surprise, or excusable neglect; (2) newly discovered evidence which by due diligence could not have been discovered in time to move for a new trial under rule 59(b); (3) fraud * * *. The motion shall be made within a reasonable time, and for reasons (1), (2), and (3) not more than 1 year after the judgment, order, or proceeding was entered or taken.

being substantially similar, provides guidance in the resolution of the timeliness question, although the rules are expressly applicable only to the U.S. district courts. *Matter of N.C. Trading*, 586 F. 2d 221, 231 (CCPA 1978).

Motions under FRCP 60(b), when based on mistake, inadvertence, or excusable neglect, must be made within a reasonable time, and in any case not more than 1 year after the judgment order or proceeding was entered or taken.

[6] In view of the 1-year limitation on similar motions to amend a judgment under FRCP 60(b), we do not consider unreasonable the passage of 46 days in filing a motion to amend under CIT rule 12.2. Moreover, the Government has demonstrated no actual prejudice resulting from the motion's filing 16 days after the 30-day period it views as permissible.

We therefore find no abuse of discretion in the trial court's grant of relief under rule 12.2, amending the judgment to include all items encompassed in Porter's original protest, where those added items are admittedly indistinguishable for classification purposes.

Accordingly, the judgment and subsequent order amending that judgment are affirmed.

(C.A.D. 1260)

THE FERRISWHEEL, APPELLANT *v.* THE UNITED STATES, APPELLEE,
No. 80–28

(—— F. 2d ——)

1. CLASSIFICATION—SCOTTISH HIGHLAND DRESS.

Court of International Trade judgment sustaining classification of articles of Scottish Highland dress as ornamented wearing apparel is affirmed in part, reversed in part.

2. ID.—ORNAMENTED GARMENTS.

Premise that garments having clearly ornamental features are classifiable as "not ornamented" because ornamentation is necessary to make garments authentic type is rejected.

3. ID.—ARGYLL AND SHERIFFMUIR JACKETS.

Argyll and Sheriffmuir jackets are ornamented by braiding work on sleeves and pocket flaps.

4. ID.—FUNCTIONAL FEATURES.

Functional features do not lose their functionality because they may not actually be used by most wearers.

5. ID.—EPAULETS

Epaulets on Argyll and Sheriffmuir jackets are not retained primarily for decorative reasons, since there are times when utility of epaulets is essential.

6. ID.—FRINGE ON KILTS—ORNAMENTATION.

Presence of fringe on kilts, would not per se render imported garment "ornamented".

7. ID.—FUNCTIONALITY.

Where amount of self-fringe on kilts is minimal and used where a hem is required, fringe is primarily functional and only incidentally decorative.

U.S. Court of Customs and Patent Appeals, March 12, 1981, Appeal from U.S. Customs Court C.A.D. 1260

[Modified.]

Joseph S. Kaplan, Lance E. Tunick, Thomas G. Ferris, Esq., pro se, for appellant.

Alice Daniel, Assistant Attorney General, *David M. Cohen*, Director, *Joseph I. Liebman*, Attorney in charge, *Sidney N. Weiss*, of counsel, for appellee.

Oral argument on December 1, 1980 by *Joseph S. Kaplan* for appellant and *Sidney N. Weiss* for appellee.]

Before MARKEY, *Chief Judge*, RICH, BALDWIN, MILLER, and NIES, *Associate Judges*.

NIES, Judge.

[1] This appeal is from the judgment of the U.S. Customs Court (now the U.S. Court of International Trade), 84 Cust. Ct. ——, C.D. 4844, 489 F. Supp. 263 (1980), as amended by order dated July 28, 1980, sustaining the classification of articles of Scottish Highland dress as ornamented wearing apparel. We affirm in part and reserve in part.

THE IMPORTED MERCHANDISE

The merchandise in question consists of two men's kilts made of wool, one man's Sheriffmuir jacket made of cotton, and one man's Argyll jacket made of wool, imported by appellant from Scotland in 1975 and 1976.

STATUTORY PROVISIONS

The kilts and the Argyll jackets were classified by the Customs Service officials under item 380.02 of the Tariff Schedules of the United States (TSUS), as modified by T.D. 68–9, as men's wearing apparel, ornamented, of wool. The Sheriffmuir jacket was classified under TSUS item 380.00, as modified by T.D. 68–9, as men's wearing apparel, ornamented, of cotton.

Appellant contends that none of the imported merchandise is ornamented, and that the kilts and Argyll jacket should properly be classified under TSUS item 380.66, and the Sheriffmuir jacket under TSUS

item 380.12, as modified by T.D. 68–9. The relevant tariff provisions read as follows:

Classified under:		
Schedule 3, part 6, subpart F.		
Men's or boys' lace or net wearing apparel, whether or not ornamented, and other men's or boys' wearing apparel, ornamented:		
380.00	Of cotton	35% ad val.
380.02	Of wool	42.5% ad val.
Claimed under:		
Schedule 3, part 6, subpart F:		
Other men's or boy's wearing apparel, not ornamented:		
	Of cotton:	
	* * * * * * *	
380.12	Valued over $4 each	8% ad val.
	* * * * * * *	
	Of wool:	
	* * * * * * *	
380.66	Valued over $4 per pound	37.5¢ per lb.+ 21% ad val.

Schedule 3, headnote 3 reads in pertinent part:

> 3. For the purposes of tariff schedules—
>
> (a) the term "*ornamented*," as used with reference to textile fabrics and other articles of textile materials, means fabrics and other articles of textile materials which are ornamented with—
>
> * * * * * * * *
>
> (iii) lace, netting, braid, fringe, edging, tucking, or trimming, or textile fabric;
>
> * * * * * * * *
>
> (b) ornamentation of the types or methods covered hereby consists of ornamenting work done to a pre-existing textile fabric, whether the ornamentation was applied to such fabric—
>
> (i) when it was in the piece,
>
> (ii) after it has been made or cut to a size for particular furnishing, wearing apparel, or other article, or
>
> (iii) after it had actually been incorporated into another article,
>
> and if such textile fabric remains visible, at least in significant part, after ornamentation: *Provided*, That lace, netting, braid, fringe, edging, tucking, trimming or ornament shall not be required to have had a separate existence from the fabric or other article on which it appears in order to constitute ornamentation for the purposes of this headnote; * * *.

The classification by the Customs Service arises from the presence on the jackets of braid sewn on the cuffs and pocket flaps and also from the presence of epaulets, on one jacket of cloth and on the other of braid. The kilts have the familiar self-fringed edge on the apron.

Appellant argues that the fringe and epaulets are functional features in the sense of being utilitarian and that the braid is used to simulate buttonholes which are functional features. Further, these features should be deemed functional since they are necessary to give the garments authenticity.

The Court of International Trade upheld the classification, finding the fringe and epaulets to be only incidentally functional and the braid to be without any function. The court concluded:

> In substance, plaintiff urges the court to hold that garments, having clearly ornamental features which may be traditional, are classifiable as not ornamented because the ornamentation is necessary to make the garment authentic. The court has found no statutory or decisional authority for such a holding. Traditional features, such as the fringe, braid and epaulets, are retained when no longer functional because they enhance the aesthetic appeal and beauty of the garment. When features, whether or not traditional, are added to a garment primarily for purposes of decoration and ornamentation, the garment is ornamented within the meaning of the tariff schedules.

OPINION

[2]We agree with the rejection by the court below of the premise that garments having clearly ornamental features are classifiable as not ornamented because the ornamentation is necessary to make the garments authentic. Appellant has cited nothing in the statute or in precedent supporting its position, and we do not find its arguments compelling. Thus, we begin from the point that authentic Highland dress must be judged by the same standards as other articles of wearing apparel.

The Argyll and Sheriffmuir jackets

[3] We agree with the court below that the jackets are ornamented by braid on the sleeves and on the pocket flaps. The braiding is clearly "ornamental work done to a preexisting fabric" (schedule 3, headnote 3(b)) and, admittedly, performs no function. Moreover, although some of the braid is located where buttonholes would be located, the extent of the braid negates an assertion that the braid simulates buttonholes. To a large extent, the braid is purely decorative.

In view of our conclusion that the jackets are ornamented by the braiding on the sleeves and pocket flaps, it would ordinarily be un-

necessary to decide whether the jackets are further ornamented by epaulets. However, since the Customs Service has announced that it is reconsidering its classification of other garments in light of the court's ruling on this point,[1] we will address this issue.

The court below concluded that the epaulets on the jackets which were originally functional were infrequently used for their intended purpose and, therefore, the eqaulets were primarily retained for decorative effect. We disagree. Functional features do not lose their functionality because they may not actually be used by most wearers. If this were the test, the functionality of features on garments could only be determined after their sale to the public.

The record establishes that the epaulets on jackets of the types here imported were affixed for functional purposes. The left epaulet is designed to be used to fasten a plaid [2] to the shoulder. The right epaulet is intended to hold a sword belt. An epaulet may also be useful to hold a bonnet. Such uses need not occur every time such a jacket is worn. A belt does not lose its essentially [4] functional character by being left unfastened. It is functional capability, together with the appropriateness of that function to the garment, which determines whether or not it is functional. There is credible undisputed testimony here that both [5] epaulets continue to serve their intended purposes, at least when the jackets are worn on ceremonial occasions. These facts are sufficient to negate that the epaulets are retained primarily for decorative reasons, since there are times when the utility of the epaulets is essential.[3]

The kilts

We agree with appellant that the fringe on the subject kilts is primarily functional. Thus the garments are not ornamented.

There is no dispute that the lapped edge of the apron of the kilt requires some type of finishing to prevent it from unravelling. From our examination of the garment, it is apparent that this edge would be likely to wear more quickly than other exposed edges and is subject to particular stress from the straps and buckles which are affixed to hold the front apron in place. Appellee, having conceded that some reinforcement is required to finish the edge along the front lap, argues that a row of stitching along this length performs adequately.

---

[1] 45 Fed. Reg. 54,085 (1980).

[2] A plaid is a rectangular length of tartan, worn on the left shoulder.

[3] At oral argument appellant admitted that Argyll and Sheriffmuir jackets have always been classified as ornamented for tariff purposes and that by classifying the entries presently before this court as ornamented, the Customs Service did not change its classification practices with respect to such garments. Accordingly, appellant's due process argument is without merit. Also, its allegation that the Customs Service did not comply with 19 U.S.C. 1315(d), relating to procedures for establishing a higher rate of duty by administrative ruling, is without foundation in the record and was not raised below. We will not consider this allegation raised for the first time on appeal. *International Seaway Trading Corp* v. *United States*, 61 CCPA 20, 24-25, 488 F. 2d 544, 547 (1973).

The testimony of Mr. Ferris, who is the president of appellant, is persuasive that the addition of two pieces of fabric to the edge of the apron is to thicken and protect the edge of the kilt from wear. Appellee offered no evidence to the contrary and it is, in any event, self-evident from the style of the garment. Appellee argues, in effect, that the extra reinforcement is unnecessary. Were we to accept the Government's position, it would not matter, logically, whether the material added were fringed or not. The addition of any material along the vertical edge of the top apron would be ornamentation since stitching alone could perform the function. The test, however, is not whether the added fabric is necessary, but whether it is primarily functional. *Endicott Johnson Corp.* v. *United States*, 617 F. 2d 278 (CCPA 1980).

The conclusion that adding fabric at the apron edge is functional does not, however, resolve the issue of the fringe. The further testimony of Mr. Ferris is that after the extra fabric is affixed to the apron, that fabric is fringed by removing a few threads. Is the resultant fringe primarily ornamental or functional?

The trial court correctly noted that **[6]** the presence of fringe would not per se render an imported garment ornamented despite the language of schedule 3, headnote 3. We start with a presumption that visible fringe is to some extent ornamental. We also recognize that fraying the edge of a fabric to create a self-fringe can be a functional alternative to hemming a cut edge, thereby eliminating the inherent bulkiness of a hem. The fringe in issue functions in such manner. Without the fringe, the cut edges of the added fabric would have to be hemmed in order to prevent uncontrolled fraying. We conclude, therefore, that the fringe here is functional in addition to being decorative.

In deciding which is its primary purpose, the controlling consideration then becomes the actual appearance of the fringe. On the kilts here in question it is only by close examination that one would be aware of the presence of fringe. The fringe on one of the added pieces is approximately one-eighth inch wide and on the other less than one-quarter inch. The pattern of the fringe matches that in the fabric of the kilt. The decorative effect is thus minimal, and we conclude that functionality is its primary purpose. We cannot distinguish the use of fringe here from the use of a decorative but primarily functional edging on sweaters found to be nonornamental in *Blairmoor Knitwear Corp.* v. *United States*, 60 Cust. Ct. 388, 284 F. Supp. 315 (1968), or the decorative but primarily functional extra stitching on shoe uppers in *Endicott Johnson, supra.*

To reiterate, we do not hold that self-fringing a raw edge in place of hemming makes the fringe primarily functional. Fringe can be so

created that it would be primarily decorative, for example, because of its length or because it is tied into a pattern. [7] Here, the amount of fringe created is minimal (in this case, the fringe is no more than the width of the smallest hem which it would be possible to make), and it is used where a hem would be required. We conclude that this fringe is primarily functional and only incidentally decorative.[4]

CONCLUSION

The judgment of the court below upholding classification of appellant's imported Argyll and Sheriffmuir jackets under items 380.02 and 380.00, TSUS, respectively, is affirmed. The judgment upholding classification of the imported kilts under item 380.02, TSUS, is reversed. The subject kilts are classifiable under item 380.66, TSUS.

(C.A. 79–35 and 80–4)

SEALED AIR CORPORATION, APPELLANT *v.* U.S. INTERNATIONAL TRADE COMMISSION, POLYBUBBLE, INC., TONG SEAE INDUSTRIAL CO., LTD., APPELLEES, APPEAL NO. 79–35

UNIPAK (H.K) LTD., APPELLANT, *v.* U.S. INTERNATIONAL TRADE COMMISSION. SEALED AIR CORPORATION, APPELLEES, APPEAL NO. 80–4

(——F..2d——)

1. SEC. 337, TARIFF ACT OF 1930, AS AMENDED. MULTICELLULAR PLASTIC FILM.

The determination of the U.S. International Trade Commission that there exists a violation of 19 U.S.C. 1337 because of importation into the United States of certain multicellular plastic film is affirmed.

2. FINDING OF EQUIVALENCE.

A finding of equivalence is one of fact made against the context of the patent, the prior art and the particular circumstances of the case which finding will not be disturbed unless contrary to the weight of the evidence.

3. ID.

Equivalence is established by showing the claimed method in all substantial aspects has been followed, not by showing accomplishment of the same result.

---

[4] Appellee argues that Mr. Banks, an expert witness for appellant, admitted that on kilt-like skirts for women, similar to the imported kilts in appearance, the fringe constituted ornamentation. We do not place that interpretation on Mr. Banks' testimony. The thrust of Mr. Banks' testimony, as well as that of Mr. Ferris, was that women's kilt-style skirts were not traditional. Therefore, the argument could not be made that the fringe should be considered an inherent part of a standard authentic garment. Since we reject that argument as to men's kilts as well, this testimony with respect to women's kilts is irrelevant.

4. Personal Jurisdiction—Exclusion Order Against Goods, Not Parties.

An exclusion order operates against goods not parties and is not contingent upon a determination of personal jurisdiction over Unipak, a foreign manufacturer.

5. Remedies for Domestic Industries Against Unfair Foreign Competition.

The Tariff Act of 1930 and its predecessor, the Tariff Act of 1922 were intended to provide an adequate remedy for domestic industries against unfair methods of competition and unfair acts instigated by foreign concerns operating beyond the personal jurisdiction of domestic courts.

6. Exclusion of Products—Notice to Foreign Manufacturer.

The ITC, upon investigation and determination of a violation of 19 U.S.C. 1337, could exclude the products sold by a domestic owner/importer/consignee, under its subject matter jurisdiction, whether or not it named the foreign manufacturer as a respondent or gave notice to that foreign manufacturer.

7. Correctness of Decision of ITC.

The decision of the ITC must be affirmed where the result is correct, notwithstanding its reliance on a wrong ground or a wrong reason.

8. ITC Procedures—Determination of Section 337 Violation.

The ITC must follow established procedures in making a determination that a violation of 19 U.S.C. 1337 has occurred and may exclude a product only after completion of such procedures.

9. Id.

Congress has authorized the ITC the right to summon witnesses, to take testimony, to require the production of documents and other evidence and to adopt such reasonable procedures, rules, and regulations as it deems necessary to carry out its functions and duties.

10. Id. Refusal of Respondent to Cooperate.

Where the subject patent claims relate to a process, the practice of which is not discernible from an examination of the product, the refusal of the respondent to cooperate cannot prevent the ITC from reaching a determination.

11. Id.

Where a respondent refuses to provide indispensable evidence of noninfringement the ITC can apply the provisions of rule 210.21.

12. Finding of Violation Under Section 337 on Exclusion of Products.

Upon a determination of violation of 19 U.S.C. 1337, the ITC may exclude all such products from entering the United States contingent upon a petition for an ITC proceeding to determine whether entry should be allowed.

13. ITC Expertise in Evaluation of Likelihood of Injury to American Business.

In view of the ITC's expertise in evaluating the likelihood of injury to American business, and absent a showing of protectable rights, it is not the function of a court to substitute a different remedy of its own design or substitute its view of the public interest.

U.S. Court of Customs and Patent Appeals, March 12, 1981

Appeal from International Trade Commission

ITC Investigation No. 337 TA 54

[Affirmed.]

In 79-35 and 80-4: *Lawrence I. Lerner, Harvey Kaye* for Sealed Air. *Glen R. Grunewald* for Tong Seae. *N. Tim Yaworski* and *Michael H. Stein* for I.T.C.

In 80-4 only: *Peter W. Gowdey, Michael L. Keller, W. S. Graham Welton*, pro se, for UNIPAK.

[Oral argument on October 6, 1980, by *Sydney David* for appellant, *Glen R. Grunewald* for Tong Seae & Polybubble, *N. Tim Yaworski* for ITC in 79-35. *Peter W. Gowdey* for appellant, *N. Tim Yaworski* for ITC, *Sydney David* for Sealed Air in 80-4.]

Before Markey, *Chief Judge*, Rich, Baldwin, Miller, and Nies, *Associate Judges*.

Markey, Chief Judge.

[1] This is a consolidated appeal from the June 29, 1979, determination of the U.S. International Trade Commission (ITC) terminating investigation No. 337-TA-54, "Certain Multicellular Plastic Film" (film). All respondents save one were found in violation of section 337 of the Tariff Act of 1930, as amended by the Trade Act of 1974, by reason of the importation of the film into, or its sale in, the United States. We affirm.

BACKGROUND

On May 12, 1978, Sealed Air Corp. (Sealed Air) filed a complaint with the ITC, alleging violations of section 337 of the Tariff Act of 1930, as amended (19 U.S.C. 1337), by the importation into the United States, or subsequent sale, of film manufactured in a foreign country by processes that allegedly infringed method claims 1 and 2 of U.S. Letters Patent 3,416,984 ('984).

After a January 1979 evidentiary hearing, a Commission Administrative Law Judge (ALJ) concluded that the claims were invalid under 35 U.S.C. 103 and recommended that no violation of 19 U.S.C. 1337 be found. The ALJ determined that the ITC had jurisdiction over all respondents.

Manufacturers named and served were: Tong Seae Industrial Co., Ltd. (Tong Seae) of Taiwan; Conform Plastics Ltd. (Conform) of New Zealand; and Unipak (H.K.) Ltd. (Unipak) of Hong Kong.

Importers named and served were Polybubble, Inc. (Polybubble) and Peter Darlington, d.b.a. Solar Pool Covers (Darlington).

Unipak neither answered the complaint nor participated in discovery. Conform filed a response but did not participate in discovery or in the hearing. Darlington participated in discovery but not in the hearing. Neither Conform nor Darlington is represented in this appeal.

A June 26, 1978, mailing of the complaint and other papers by the ITC to Unipak resulted in a return receipt stamped July 6, 1978. Unipak admittedly received Sealed Air's request for discovery and declined to participate. Four shipments of film into the United States were made by Unipak, with Polybubble as the importer.

On December 7, 1978, upon motion by Sealed Air, the ALJ issued order No. 6, finding Unipak in default and ruling that "without further notice to Unipak, the facts may be found to be as alleged in the complaint and notice of investigation."

The Commission: (1) Reversed the ruling of invalidity; (2) found Tong Seae's process noninfringing; and (3) sustained the finding of jurisdiction with respect to Unipak. Conform and Unipak were found to have infringed claims 1 and 2 of the '984 patent. All respondents except Tong Seae were held in violation of 19 U.S.C. 1337.

Polybubble, as an importer of Unipak's products, and Tong Seae challenge the ruling that the '984 patent is valid. Sealed Air challenges the determination of noninfringement by Tong Seae. Unipak challenges the determination that it is subject to the jurisdiction of the ITC.[1]

ISSUES

(1) Would the subject matter of claims 1 and 2 of the '984 patent have been obvious to one of ordinary skill in the art at the time the invention was made?

(2) Was the determination that Tong Seae's extrusion process does not infringe claims 1 and 2 of the '984 patent erroneous?

(3) Did the ITC have jurisdiction to exclude Unipak's product?

(1) Validity of Claims 1 and 2

(a) The invention

The '984 patent discloses and claims a process for manufacturing film. Two sheets of polyethylene are so heated, shaped, and bonded together as to form numerous airtight cells. The resulting cushioning and insulating properties make the product useful as packaging material and as covers for swimming pools.

[1] The finding of infringement by Conform is not challenged on this appeal. Unipak's brief argues noninfringement, but that issue is not before us. The standing of the parties to present arguments on the validity of the '984 patent is fully described in this court's review of Sealed Air's motion to dismiss and strike portions of a separate appeal, reported as *Tong Seae Industrial Co., Ltd., et al. v. USITC, et al.*,— CCPA —, decided Jan. 7, 1980. Upon stipulation of the parties, that appeal was dismissed in favor of the present appeal.

In the '984 process, two sheets of film are separately heated. One sheet (the embossed film) is heated to a low temperature sufficient to render it deformable by vacuum drawing into the cavities of an embossing roller to form numerous discrete embossments. The second sheet (the laminating film) is heated to about the fusion temperature with at least one surface above the fusion temperature, and then applied to the now embossed surface of the embossed film while the latter is still on the embossing roller. During their mating, transfer of heat from the laminating film to the embossed film seals the two films to form a product having numerous airtight cells.

Unlike prior art techniques, the '984 process employs a cooler embossed film and a hotter laminating film. It had previously been thought that effective sealing required the mating surfaces of both films to be at or above the fusion temperature [2] at the kiss point, where the embossed film contacted the laminating film. The problem was that when the embossed film was heated to fusion temperature, it became so soft and weak that individual embossments often ruptured when subjected to vacuum during their formation. The solution to that problem disclosed in the '984 patent is to so increase the temperature of the contact surface of the laminating film as to allow a reduced temperature of the contact surface of the embossed film, thus permitting vacuum embossment without rupture, and to transfer the excess heat from the laminating film to the embossed film at the kiss point, thus equalizing the temperatures of both films at or above the fusion temperature and producing an effective heat seal between them.

Claims 1 and 2 of the '984 patent read:

> 1. The method of making cellular material comprising the steps of embossing a first heated sheet of plastic material having thermoplastic properties, said sheet having been heated on one side to about its fusion temperature, said embossments extending from the other side of said sheet, reducing the temperature on the other side of said sheet below the embossing temperature immediately after embossment thereof, heating a second sheet of plastic having thermoplastic properties to about the fusion temperature with at least one surface above the fusion temperature, feeding said one side of said second sheet into contact with said one side of said embossed sheet while above the fusion temperature to seal the embossments therein, said one surface of said second sheet transferring heat to said one side of said first sheet to equalize the temperatures of the meeting surfaces of said sheets at a temperature at least equal to the fusion temperature.
>
> 2. The method of making a cellular material according to claim 1 including the steps of cooling the other side of said first sheet immediately upon embossment thereof and then cooling said sheets to permanently seal them one to the other.

---

[2] That temperature at which the mating surfaces of two films so melt together that there is no distinguishable interface between them.

(b) Validity

Analysis of validity under 35 U.S.C. 103 requires determination of the scope and content of the prior art, ascertainment of differences between the prior art and the invention claimed, and resolution of the level of ordinary skill in the art. *Graham* v. *John Deere Co.*, 383 U.S. 1, 17 (1966).

The principal prior art reference is U.S. Patent No. 3,142,599 (Chavannes I) assigned to Sealed Air.[3] Chavannes I discloses a process of embossing a heated film and applying a heated laminating film to the embossments, and, as in the '984 patent, employs low-density polyethylene films having a narrow temperature band in which embossing may be performed. The minimum embossing temperature [4] and the melting temperature [5] are separated, dependent on the characteristics of the film selected, by as little as 10° to 20°. The embossing temperature is between 218° and 226° F. and the melting temperature is between 225° and 230° F.[6] The fusion temperature is between 214° and 222° F.

Chavannes I teaches that both films should be so heated that their mating surfaces will be at fusion temperature at the kiss point. Both films were processed in Chavannes I at a temperature considered very close to their upper limits, and the embossed film remained susceptible to ruptured embossments. Though the surface of the embossed film in contact with Chavannes' cool embossing roller lost heat, Chavannes taught maintenance of its opposite or "mating" surface at the fusion temperature or greater. The film being relatively thin (1–5 mils), each of its surfaces is affected by temperature changes on the opposite surface. Extreme care was necessary with the Chavannes I process in attempting to minimize the tearing effect of embossment by keeping one surface of the embossed film as cool as possible, while simultaneously, and directly contra the teachings of the '984 patent, maintaining the opposite mating surface at fusion temperature.

Though claim 1 of the '984 patent speaks of initially heating the mating surface of the embossed film to about its fusion temperature, the cooling step of that claim reduces that temperature below the fusion level; next, at the kiss point, the surface of the embossed sheet is brought up to fusion temperature. Nothing in Chavannes I discloses or suggests the steps of the asserted claims in which the mating

---

[3] Chavannes is coinventor with Fielding on the '984 patent and on U.S. Patent No. 3,208,898 (Chavannes II), both assigned to Sealed Air. Chavannes and Fielding are cofounders of Sealed Air Corp., of which Fielding is a director. Fielding testified before the ALJ on the making of the invention, the prior art, and commercial success.

[4] That temperature at which the film to be embossed is sufficiently soft to be readily deformed by application of vacuum and keep its deformed shape upon cooling.

[5] That temperature at which the stretched film loses its dimensional stability.

[6] Sealed Air says in a reply brief that the embossing temperatures may be substantially higher than the 218°–226° F. range. That statement conflicts with the asserted advantage in a low embossing temperature and with Fielding's testimony that the same film in the process of Chavannes I "just self-destructs" when heated above the melting temperature.

surface of the embossed film is cooled and sealing is accomplished through heat transfer from the laminating layer.[7]

Chavannes and Fielding obtained a patent (Chavannes II) on "Apparatus for Embossing and Laminating Material," [8] relating to fabrication of film. Chavannes II discloses a cooling means within the embossing roller to cool and thus strengthen the embossments as they are formed. Insulating means on the roller are also disclosed, however, to shield the mating surface of the film from the effect of the cooling means, so that the mating surface may be maintained, as in Chavannes I, at fusion temperature. While Chavannes II teaches means to lower the temperature of one surface of the embossed film, its teaching of means to maintain a high temperature of the mating surface is contrary to the process steps of the asserted claims by which the latter temperature is reduced below fusion temperature.

Chavannes II also discloses a three-film lamination in which a third layer is heated to near its melting point and placed over the salient portions of sealed cells, to transfer sufficient heat from the third layer to form a firm joinder.

Sealed Air says: (1) Chavannes II discloses only a tack seal,[9] not the complete hermetic seal of the '984 patent; (2) Chavannes II is not a valid reference because it issued to the same inventors after the filing date of the application on which the '984 patent issued; and (3) there is no evidence that the three-layer heat transfer embodiment was used or known by others before the filing date of the '984 patent.

Tong Seae and Polybubble point to Fielding's testimony to support their contention that the three-layer heat transfer embodiment was known in the art. Fielding, however, testified that that embodiment produced a peelable tacking seal. Thus the only evidence of record supports Sealed Air's position on the nature of the Chavannes II seal. Though Fielding referred to his experience, nothing of record indicates the nature of that experience, or whether it involved actual use of the three-layer embodiment, or whether it occurred before or after the filing date of the '984 patent. Consequently, respondents have not sustained their burden of proof, having failed to demonstrate that the teachings of Chavannes II were known to others before the filing date of the '984 patent. 35 U.S.C. 102(a). Hence, Chavannes II has not been shown to be a valid reference.

The scope and content of the prior art contain nothing to suggest the differences disclosed in the claimed invention, and the level of skill reflected in the record did not rise to a point at which it can be

---

[7] The Commission held that British Patent No. 908,579 to Bingham duplicates the disclosure of Chavannes I. The Bingham patent is not discussed by the parties on this appeal.

[8] U.S. Patent No. 3,208,898, filed Mar. 9, 1960, issued Sept. 28, 1965, assigned to Sealed Air Corp.

[9] A tack seal has been described as a seal which could easily peel apart due to failure to completely bring the interface of the films to the fusion temperature.

said that the process of claims 1 and 2 as a whole would have been obvious to one skilled in the art at the time the invention was made. No reference discloses or suggests the steps of lowering the temperature of an embossed film sheet, increasing the temperature of a laminating film sheet, and transferring heat between their mating surfaces to hermetically bond them. Accordingly, we affirm the determination of the ITC that claims 1 and 2 of the '984 patent are valid.

(2) *Infringement*

In the Tong Seae process, polyethylene is heated to about 540° F. and extruded as a hot liquid directly onto an embossing roller. The embossing roller is extensively cooled by refrigerated air and water. A fine mesh screen underlies each roller cavity to prevent molten polyethylene from being drawn through the cavity by the applied vacuum and is also chilled by refrigerated air and water. The extruded liquid film, upon contacting the roller surface, inner cavity walls, and mesh screens, is cooled to solidification. The laminating film is also extruded as a hot (about 540° F.) liquid and brought into contact with the embossed film after the embossments are formed. The two films, while still on the embossing roller, then pass through a pool of chilled water to solidify the seal between them.

Sealed Air's expert witness, Buckley, having viewed the Tong Seae process and taken temperature readings, said that the temperature of the embossed film fell well below the fusion temperature after embossment. Because a bond was formed between the two films, says Buckley, heat transfer from the laminating film must have occurred.

It is undisputed that the Tong Seae process does not literally infringe claims 1 and 2 of the '984 patent. Those claims specify the heating of preformed plastic sheets. The Tong Seae process forms the film product from molten plastic extruded directly onto an embossing roller. Sealed Air therefore relies on the doctrine of equivalents. Claim limitations to heating the embossed sheet and one side of the laminating sheet to about the fusion temperature are to be viewed, says Sealed Air, as energy efficient steps in a reheating process, and should not be rigidly read as critical temperature controls. Also, says Sealed Air, the recited temperature limitations merely relate to the best mode of carrying out the broad inventive concept of lowering the embossed film temperature to prevent rupturing, and holding the laminating film sufficiently above fusion temperature to bring the mating surfaces to at least the fusion temperature.

[2] Equivalence is determined against the context of the patent, the prior art and the particular circumstances of the case. *Graver Tank &*

Mfg. Co., Inc. v. *Linde Air Products*, 339 U.S. 605 (1950), 7 Deller's Walker on Patents section 546 (2d ed. 1972). A finding of equivalence or nonequivalence is one of fact. *Parmelee Pharmaceutical Co.* v. *Zink*, 285 F. 2d 465, 128 USPQ 271 (CA8 1961). That finding will not be disturbed unless clearly contrary to the weight of the evidence. *Solder Removal Co.* v. *ITC*, 582 F. 2d 628, 199 USPQ 129 (CCPA 1978).

For an accused process to infringe under the doctrine of equivalents, it must employ substantially the same means, to achieve substantially the same results, in substantially the same way, as the patented process. *Graver Tank & Mfg. Co., Inc.* v. *Linde Air Products, supra*, at 608. The Commission concluded, and we agree, that present here are substantially the same means (thermoplastic material, vacuum embossing, and heat), and substantially the same result (the manufacture of the film without rupture of cells), but absent is the achievement of that result in substantially the same way. Unlike the Tong Seae process, the patented process depends for success upon careful control of film temperature before and during embossment and lamination.

Fielding's testimony that laminating film would self destruct if heated above melting temperature undercuts Sealed Air's position that a process employing molten laminating film at hundreds of degrees above melting temperature represents an equivalent of its process employing preformed sheets heated below melting temperature. Moreover, Tong Seae's process step of rapidly cooling down from hundreds of degrees is distinct from the very narrow range operation of the '984 process. Further, it is incongruous for Sealed Air to argue that its process is not dependent on close control of temperatures in light the of the '984 disclosure treating sides of a very thin sheet at different temperatures within very narrow ranges.

The ITC noted portions of the '984 specification, attorney's comments during prosecution of the '984 patent, and testimony of Fielding' all describing the necessity of bringing the two sides of two films, or portions thereof, to a specific temperature or temperature range at various points in the '984 process. Referring to the language of the claims, the ITC concluded that the Tong Seae extrusion process neither depends upon the temperature control technique of, nor operates in substantially the same way as, the patented process.

Sealed Air, in its brief says ITC relied on portions of the record that relate more to the state of the art prior to introduction of the '984 process, which, says Sealed Air, reduced dependency upon rigid temperature control by eliminating the requirement of the Chavannes I process that the mating surface of the embossed film be maintained at or above fusion temperature. The '984 process is, however, depend-

ent upon maintaining prefabricated sheets within a narrow temperature range. Moreover, the thermal characteristics of the polyethylene material dictate that film be cool enough to enable reliable embossment; that mating surfaces be at fusion temperature to effect sealing, and those parameters are fixed whether the process be one of reheating or extrusion. Sealed Air's patent claims 1 and 2 cannot be read to encompass all embossing and sealing processes operating within those inherent temperature confines.

A pioneer invention, performing a function never before performed, is entitled to liberal application of the doctrine of equivalents. *Morley Machine Co.* v. *Lancaster*, 129 U.S. 263 (1889); *Parmelee Pharmaceutical Co.* v. *Zink*, *supra*. The '984 patent, however, discloses a process earlier performed, that is, the production of multicellular film by heating, vacuum embossing, and sealing. Sealed Air is entitled to protection of its claimed improvement of the process, but others are entitled to practice variations of the old process, so long as those variations differ from and do not include that of the '984 patent. *Universal Oil Products Co.* v. *Globe Oil & Refining Co.*, 322 U.S. 471 (1944); see *Coleco Industries, Inc.* v. *I.T.C.*, 65 CCPA 105, 573 F. 2d 1247, 197 USPQ 472 (CCPA 1978).

[3] Nor is equivalence established by showing accomplishment of the same result. The test is whether the claimed method in all substantial aspects has been followed. *U.S. Rubber Co.* v. *General Tire and Rubber Co.*, 128 F. 2d 104, 53 USPQ 444 (CA6 1942). Sealed Air has not met that test.

Sealed Air's contention that claims 1 and 2 merely set forth the best mode, and should be interpreted to encompass processes employing the inventive concept of heat transfer between film mating surfaces, is without merit. It is axiomatic that the claims measure the invention,[10] and courts may neither add to nor detract from a claim. *Cimiotti Unhairing Co.* v. *American Fur Refining Co.*, 198 U.S. 399 (1905); *Ohio Citizens Trust Co.* v. *Lear Jet Corp.*, 403 F. 2d 956, 160 USPQ 11 (CA10 1968). Sealed Air's attempt to substitute an inventive concept for the invention set forth in the claims is tantamount to claiming infringement based on a function or result; abstractions cannot be patented. *Westinghouse* v. *Boyden Power Brake Co.*, 170 U.S. 537 (1898); *Nelson* v. *Batson*, 322 F. 2d 132, 138 USPQ 552 (CA9 1963).

We reaffirm the determination of the ITC that claims 1 and 2 of the '984 patent are not infringed by the Tong Seae process.

---

[10] Sealed Air's reliance upon *Smith* v. *Snow*, 294 U.S. 1 (1934), is misplaced. In *Smith*, the Supreme Court stated:

> We may take it that, as the Statute requires, the *specifications* just detailed show a way of using the inventor's method, and that he conceived that particular way described was the best one. But he is not confined to that particular mode of use since the *claims* of that patent, not its specifications, measure the invention. [Italic ours.]

(3) Jurisdiction

Unipak having failed to respond to the complaint, and having refused to participate in discovery, the ITC entered an order excluding the relevant products of Unipak from entry into this country. Unipak has appealed, asserting that it was given inadequate notice of the investigation and had insufficient contacts with the United States to support the jurisdiction of the ITC. That assertion is based on an incorrect view of the nature of ITC's jurisdiction.

The order was not entered against Unipak personally. The sole effect upon Unipak is that the relevant product cannot be imported into the United States until it is established that it has not been made by the patented process. The order is directed against, and only against, certain "multicellular plastic material manufactured abroad in accordance with the process disclosed by [4] claims 1 and 2 of U.S. Letters Patent 3,416,984."[11] An exclusion order operates against goods, not parties. Accordingly, that order was not contingent upon a determination of personal or in personam jurisdiction over a foreign manufacturer. [5] The Tariff Act of 1930 (Act) and its predecessor, the Tariff Act of 1922, were intended to provide an adequate remedy for domestic industries against unfair methods of competition and unfair acts instigated by foreign concerns operating beyond the in personam jurisdiction of domestic courts. See, *In re Orion Co.*, 22 CCPA 149, 163, 71 F. 2d 458, 467, 21 USPQ 563, 571 (1934). Authority to provide such remedy is grounded in Congress plenary constitutional power to regulate foreign commerce, a portion of which power Congress delegated to the ITC under 19 U.S.C. 1337.[12] That Congress has wide discretion concerning procedures for barring imports has been judicially confirmed in numerous cases.[13]

The ALJ and the ITC found that the ITC had in personam jurisdiction over Unipak. That finding was unnecessary, although there is evidence to support such a finding. The subject matter jurisdiction of the ITC over "the importation of articles into the United States", section 1337(a), and its authority to exclude "the articles concerned", section 1337(d), are fully adequate. Similarly, the sale in the United States of a foreign manufacturer's articles, by the owner, importer, or consignee of those articles is clearly within the subject matter

[11] Presumably, the ITC meant to refer to the process encompassed by, or set forth in, or defined by claims 1 and 2, the function of claims being to define the metes and bounds of the claimed invention. Disclosure is the function of the entire specification.

[12] U.S. Constitution, article 1, sec. 8, clause 3; see *In re Chain Door Locks*, 191 USPQ 272, 279, ITC investigation No. 337-TA-5 (1976).

[13] See, for example, *Superman v. Forbragd*, 267 F. Supp. 817 (N.D. Cal. 1967), aff'd 405 F. 2d 1189 (C.A. 9, 1968), which upheld the discretion given to the Secretary of Health, Education, and Welfare under the Food, Drug, and Cosmetic Act, 21 U.S.C. 331(a) to bar adulterated foods without a formal hearing; see also, *The Board of Trustees of the University of Illinois v. United States*, 20 CCPA 134, T.D. 45778 (1932), aff'd, 289 U.S. 48 (1933).

jurisdiction of the ITC under section 1337(a). [6] Hence the ITC, upon investigation and determination of a violation, could exclude products sold by a domestic owner/importer/consignee, under its subject matter jurisdiction, whether or not it named the foreign manufacturer as a respondent or gave notice to that foreign manufacturer.

When the imported product is alleged to infringe patent claims drawn to a product, the truth of that allegation can be tested by comparison of the product with the claims. When, as here, the imported product is alleged to have been made by a process that infringes patent claims drawn to a process of making the product, determination of the literal truth of that allegation requires comparison of the process employed by the foreign manufacturer with the claims. Thus, in the former instance a product found to be itself an infringement, and all products identical to it, may be excluded, without regard to which foreign manufacturer was exporting it to the United States, and without regard to how it was made. Apparently recognizing that, in the instance of a process claim, the personal involvement of the manufacturer and the process it employed is determinative; that is, that the same product might be made by several manufacturers employing different processes, Sealed Air named Unipak in the complaint as a respondent, and ITC sent Unipak a copy of the complaint, a notice of its investigation, a copy of its rules of practice, and other papers. Thereafter, the ITC determined that in personam jurisdiction over Unipak was required to support its order excluding Unipak's products.

[7] The ITC's mistaken belief that it required in personam jurisdiction was not determinative of the result, and its decision must be affirmed where the result is correct, notwithstanding its reliance on a wrong ground or a wrong reason. *SEC* v. *Chenery Corp.*, 318 US 80, 88 (1942).

In *In re Orion Co., supra*, this court noted the broad mandate of Congress to regulate acts of importation stating:

> So long as such regulation was within constitutional limitations, as we have seen it was, the wisdom of the methods provided by the Congress is a political, not a judicial, question. The importer has no right to complain as to the operation of the machinery, for the act of importation, even to our citizens, is not a vested right, but an act of grace. *Buttfield* v. *Stranahan*, 192 US 470 (1904).

Because the act does not require personal or in personam jurisdiction over a foreign manufacturer before its goods may be excluded from entry into this country, Unipak's allegations of inadequate notice and insufficient contacts are irrelevant, and its principal argument, directed solely at a jurisdictional question, must fail.

[8] Though its subject matter jurisdiction is sufficient, the ITC is a creature of statute. Hence it must follow established procedures in making a determination that a violation of the act has occurred, and may exclude a product only after completion of such procedures.

[9] To enable it to carry out its duties in connection with investigations authorized by law, ITC was granted the right to summon witnesses, to take testimony, and to require the production of documents and other evidence pertaining to a pending investigation.[14] In addition, Congress authorized the ITC to adopt such reasonable procedures, rules, and regulations as it deems necessary to carry out its functions and duties.[15]

Accordingly the ITC has duly promulgated rules of practice. Rule 210.21 requires each respondent to affirmatively respond to each allegation in the complaint, and to set forth a concise statement of the facts constituting each ground of defense within 20 days from the date of service of the complaint and notice of investigation.[16] More particularly, rule 210.21(b)(1) provides that where it is asserted in defense that an article imported or sold by a respondent is not covered by, or produced under, a process covered by the claims of a U.S. patent involved, a showing of such noncoverage for each involved claim in each U.S. patent in question shall be made by appropriate allegations.[17]

Rule 210.21(d) addresses the consequences of the failure of a respondent to comply with rule 210.21:

> (d) Default. Failure of a respondent to file a response within the time provided for in subsection (a) of this section may be deemed to constitute a waiver of its right to appear and contest the allegations of the complaint and of the notice of investigations, and to authorize the presiding officer, without further notice to that respondent, to find the facts to be alleged in the complaint and notice of investigation and to enter a recommended determination (or a determination if the Commission is the presiding officer) containing such findings.

Unipak does not contest the validity of the quoted rule provision on "Default".[18] It merely argues that petitioner offered no evidence during the investigation to establish a violation of 19 U.S.C. 1337.

---

[14] 19 U.S.C. 1333.

[15] 19 U.S.C. 1335. The stringent congressional requirement that ITC complete action on each complaint within 1 year, 19 U.S.C. 1337(b)(1), makes the authority to design and adopt procedures even more critical to the ITC than might be true in agencies upon which no such deadline is imposed.

[16] 19 CFR 210.21.

[17] 19 CFR 210.21(b)(1).

[18] 19 CFR 210.21(d). By failing to participate, Unipak forfeited its right to generate a factual record. Yet ITC must continue its investigation. Sec. 1337(b). Sealed Air introduced evidence of infringement. Unipak introduced no evidence. Under those circumstances, Sealed Air prevails, and the default in 19 CFR 210.21(d) is not a default judgment based on in personam jurisdiction. It is but a necessary procedural outcome when a respondent elects not to participate in an ITC investigation.

[10] As above indicated, where, as here, the subject patent claims relate to a process and the practice of that process is not discernible from an examination of the product, cooperation of the respondent is necessary if the ITC is to carry out, in a normal manner, its mandate to investigate. ITC's obligation to conduct an investigation and to reach a determination, however, does not and cannot depend upon cooperation from named respondents. There must be, and there are, consequences attendant upon a respondent's refusal to respond.

The record establishes that Unipak denied the ITC its cooperation. Indeed, Unipak arrogantly and intransigently refused to participate in the proceeding from which it now appeals.

Unipak's response to Sealed Air's request for interrogatories was a letter dismissing the interrogatories as "needlessly long, detailed and in many cases irrelevant," and announcing that such request "should be passed to the Hong Kong courts before requiring a Hong Kong corporation to respond." Unipak expressly refused to provide any evidence of its manufacturing process in writing. It limited its cooperation to an offer to testify before the ITC at a time and date mutually convenient, *Provided*, That subject matter it may consider confidential would not be disclosed to Sealed Air or to the respondents, and *Provided further*, That it be guaranteed the total expenses it would incur in sending representatives to appear before the ITC. Unipak concluded by reserving to itself its right to continue exportation of its products into the United States.

In view of Unipak's failure to respond to the complaint and notice of investigation, coupled with its failure to participate in discovery, the ITC was fully justified in discharging, in the only way it could, its obligation to issue a determination on whether importation and sale of Unipak's product was in violation of 19 U.S.C. 1337. The alternative would have been to allow Unipak to frustrate the ITC's investigation, while it continued to ship its products into the United States to the injury of efficiently operated domestic industries. **[11]** If the ITC were precluded from applying its default rule, when confronted with a foreign manufacturer's adamant refusal to participate, and refusal to provide indispensable evidence of noninfringement, the ITC's determination would be postponed indefinitely and the ITC would be deprived of the means to perform its functions under the statute, clearly frustrating the intent of Congress. This court can see no basis for placing that lethal weapon in the hands of foreign manufacturers.

Contrary to Unipak's contentions, the record establishes, prima facie, that the process employed by Unipak infringes the patented process. The allegations in the complaint concerning Unipak's process,

standing naked of answer by Unipak,[19] in whose control the evidence of its process resides, are sufficient in themselves. 19 CFR 210.21(d). In addition, the ALJ heard direct testimony of Sealed Air's expert, Fielding, based on his first-hand observations of Unipak's machinery and process.

Fielding described the embossing roller used in Unipak's machine, the nature of the cooling system as described to him by Unipak personnel, and the relative location of machinery parts, including the dies and the embossing cylinder. Fielding concluded, and explained his conclusion, that Unipak employed the heat transfer process claimed in the Sealed Air patent. He went on to estimate the capacity of the Unipak machinery.

Fielding might or might not have withstood rigorous cross-examination. That question is not answerable because Unipak and Polybubble, its importer, chose to forego their opportunity to cross-examine the witness or to otherwise test the credibility of the witness during the proceeding below. They cannot now do so before this court. Nor will this court evaluate the testimony or the evidence, or substitute its evaluation for that of the ITC, under such circumstances. Accordingly, we hold the ITC's determination fully supported by the record before it.

Having determined the existence of a violation of the law, that is, of unfair methods of competition or unfair acts in the importation of certain multicellular film products into the United States, having the effect or tendency to destroy or substantially injure an efficient and economically operated domestic industry, the ITC was faced with two alternatives.

[12] The ITC could exclude all such products from entering the United States contingent upon Unipak's or other foreign manufacturer's or the importer's petition for an ITC proceeding to determine whether entry should be allowed.[20] That remedy risked unfairness to a foreign manufacturer entitled to entry; for example, one whose process might be found noninfringing, the unfairness being denial of importation for the period necessary to make that finding.

Alternatively, the ITC could allow Unipak and other foreign manufacturers to continue to ship, and importers continue to import, all such products into the United States until Sealed Air could file

---

[19] Nor did the answer filed by Polybubble respond to the allegation that Unipak's products were produced by the patented process.

[20] The opinion (not the order) of ITC entitles Unipak to petition for further proceedings if it should change its process. Unipak, apparently now willing to appear before the ITC, makes much of the word "changed" saying its existing process has never infringed and that it could not truthfully show that the process had changed. Because its present process is in effect presumed to be one covered by claims 1 and 2 of the patent, a showing that its process is not now so covered would reflect a change from that presumed process, even though, as Unipak asserts, its earlier process was not so covered and it did not actually change that darlier process.

another complaint against Unipak and new complaints against each other such foreign manufacturer or importer, the ITC could institute investigations in each case, and violations could be found. That alternative risked unfairness to American industry injured by importation during the period necessary to reach those determinations.[21]

The ITC chose to resolve the issue in favor of American business. In paragraph 3 of its determination, ITC referred to its consideration of the effect of its order upon the public health and welfare, competitive conditions in the United States economy, the production of like or directly competitive articles in the United States, and the interests of U.S. consumers. In sum, ITC determined whether the public interest lies in excluding or not excluding the goods involved. There has been no showing that the present ITC order is in any way inconsistent with its mandate. **[13]** In view of the ITC's expertise in evaluating the likelihood of injury to American business, and absent a showing of loss of protectable rights, it is not the function of a court to substitute a different remedy of its own design for that chosen by the ITC, or to substitute its view of the public interest for that of the TIC.[22]

The ITC's determination and order are affirmed.

NIES, J., with whom BALDWIN, J. joins, concurring with respect to Appeal No. 79–35 and dissenting with respect to Appeal No. 80–4.

By affirming that the Tong Seae process would not, if practiced in the United States, infringe U.S. Patent No. 3,416,984 owned by the complainant Sealed Air, this court has no alternative but to vacate the order below and remand for the ITC's determination of violation of 19 U.S.C. 1337 based on the evidence with respect to the processes of others. An exclusion order must be supported by factual findings based on reliable, probative, and substantial evidence (5 U.S.C. 556(d)) which establish the material facts required under 19 U.S.C. 1337 for issuance of the order. In this case, the order is unsupported by the ITC's analysis and reliance on any evidence. In violation of the directive of the Supreme Court, every precedent as to the scope of appellate review, and without a glance at the Administrative Procedure Act, the majority substitutes its own findings to uphold the order. I respectfully dissent.

The ITC based its determination that there was a violation of 19 U.S.C. 1337 (and 1337a) in the importation of Unipak's products on

---

[21] During the course of such investigations, ITC could allow such products of Unipak and other foreign manufacturers to be imported under bond (19 U.S.C. 1337(e)). The record does not reflect any effort by petitioner for further ITC proceedings or for entry under bond.

[22] Nothing in the ITC order precludes a challenge to validity of the patent or the assertion of any other defense in further proceedings. The reference to change of Unipak's process in ITC's opinion, see n. 19, may or may not presage denial of other defenses to Unipak in a further proceeding. Until such time as Unipak has requested such a proceeding and has been denied a defense, the question of the ITC's authority to limit defenses in such a proceeding is not before us.

findings that it had in personam jurisdiction over Unipak, a company located in the British Crown Colony of Hong Kong, which was sent a notice of investigation and complaint by mail, and that Unipak defaulted by failing to answer the complaint and refused to participate in discovery. Unipak challenges the determination of violation based on these findings.

The majority holds in personam jurisdiction over Unipak is unnecessary for the issuance of an exclusion order against its products. Disregarding the ITC's findings, the majority makes its own by relying ambiguously on Unipak's default, Unipak's arrogance and intransigence, and interjecting its own review of the evidence concerning the Unipak process to show a prima facie case of infringement.[1] *SEC* v. *Chenery Corp.*, 318 U.S. 80 (1943), relied upon by the majority, prohibits rather than endorses the substitution of the court's findings to sustain the order below.

Unipak's default and intransigence

On June 26, 1978, the ITC instituted an investigation relating to multicellular plastic film used for swimming pool covers based on a complaint filed by Sealed Air, a U.S. corporation, on May 12, 1978, which named two domestic importers (Darlington and Polybubble) and three foreign manufacturers, Tong Seae (Taiwan), Conform (New Zealand), and Unipak (Hong Kong) as respondents. On June 29, 1978, the ITC sent notices of investigation with copies of the subject complaint to all named respondents. Answers were filed by all except Unipak. A receipt initialled by some unknown recipient was returned to the ITC, which indicates acceptance of the mailing to Unipak, on July 6, 1978. Unipak denies that it received these documents and alleges that the correspondence was misaddressed.

In any event, Unipak acknowledges receiving interrogatories from counsel for Sealed Air shortly thereafter and a copy of Sealed Air's "Discovery Statement."

On August 3, 1978, Unipak responded to Sealed Air with copies to all other named respondents and to appropriate persons in the ITC and other Government agencies. Unipak acknowledged receiving Sealed Air's interrogatories but denied receiving the complaint from the ITC. It questioned the authority of the ITC outside the United States. It advised that requests concerning the investigation must be processed through the Hong Kong courts. It objected to the interrogatories as needlessly long, detailed and in many cases irrelevant and refused to disclose confidential information in writing. It offered to give testimony to the ITC provided certain matters were treated

[1] Technically, the use of the process could infringe only if practiced in the United States. For convenience, the term infringement is used in this opinion in the broader sense to include practice abroad.

confidentially and its expenses were guaranteed. It denied the allegations of the complaint totally, and reserved its right to continue exportation of products to the U.S.A. Unipak further advised that Polybubble (a named respondent/importer) was under the duty to defend Unipak against all claims arising out of the importation of Unipak's products into the United States.

Sealed Air's counsel did not reply to this letter. However, on August 31, 1978, the attorney for the ITC undertook to do so, enclosing the complaint and a copy of the ITC rules. He advised that there were no motions regarding discovery; that Sealed Air had stated its intentions were to inspect the facilities of the foreign respondents in order to determine whether or not there was infringement of the subject patent and proposed to use an independent technical expert, qualified under a protective order in effect, to analyze technical confidential data.

He further advised that "there is presently pending a motion for default against your firm dated August 14, 1978, pursuant to rule 210.21(d) for failure to file a response to the complaint." [2]

On October 15, 1978, Unipak acknowledged receipt (on Oct. 12, 1978) of the August 31 letter from ITC's counsel, as well as receipt in the interim of the first mailing. Unipak continued to protest the jurisdiction of the ITC and the charge that it used the Sealed Air process in its three layer film, objected to any finding that it was in default, and again offered to cooperate in the investigation through the Hong Kong courts or before the ITC if its expenses were paid.[3]

On December 7, 1978, the administrative law judge (ALJ) made the following findings:

> Motion No. 54–4S granted to the extent that the following findings are made:
>
> 1. The Commission has jurisdiction over Unipak.
>
> 2. Unipak has failed to file a response to the complaint within the time provided for in rule 21(a) of the Commission's rules, and is therefore found to be in default under rule 21(d). Unipak's failure to file a response is deemed to constitute a waiver of its right to appear and contest the allegations of the complaint and of the notice of investigation. Without further notice to Unipak, the facts may be found to be as alleged in the complaint and notice of investigation, and a recommended determination may be made containing such findings.
>
> Further findings and a recommended decision will be reserved, so that the findings relating to Unipak will not be inconsistent with the evidentiary record made in this case.

---

[2] Although complainant's motion for default is dated Aug. 14, 1978, it bears a filing date stamp of Sept. 7, 1978.

[3] 19 CFR 201.5 provides for payment of the same fees as paid to witnesses in the courts of the United States.

The ultimate findings by the ALJ were that the subject patent was invalid and there was, accordingly, no violation in the importation of multicellular plastic film into the United States, but that if the patent were valid, Unipak and another foreign manufacturer, Conform, would be in violation of 19 U.S.C. 1337 by default.

The Commission on June 29, 1979, reached a contrary conclusion as to the validity of the patent. After review of an extensive record developed by Sealed Air and Tong Seae, the Commission then determined that the extrusion process practiced by Tong Seae for making multicellular plastic film did not infringe the process covered by claims 1 and 2 of Sealed Air's patent which utilizes sheets of plastic as the starting material. Having found U.S. Patent 3,416,984 valid but not infringed by the Tong Seae process, the Commission relied upon the nonparticipation by Unipak and Conform for its exclusion order, making the following findings:

> Specifically we find that (1) claims 1 and 2 of the '984 patent have not been shown to be invalid, (2) the processes used by respondents Conform and Unipak to manufacture multicellular plastic film abroad would, if practiced in the United States, infringe claims 1 and 2 of the '984 patent, (3) the process used by respondent Tong Seae to manufacture multicellular plastic film abroad would not, if practiced in the United States, infringe claims 1 and 2 of the '984 patent, and (4) the unauthorized importation into and subsequent sale in the United States by respondents Polybubble and Peter Darlington of multicellular plastic film manufactured abroad by Conform and Unipak has the tendency to injure substantially an efficiently and economically operated domestic industry. [Footnote omitted.]

These findings are explained in the opinion as follows:

4. The Conform and Unipak processes infringe

The ALJ recommended that the processes employed by Conform and Unipak in manufacturing multicellular plastic film be found to infringe claims 1 and 2 of the '984 patent. We concur.

Neither Conform nor Unipak participated in discovery. Conform was subject to evidentiary sanctions. With respect to Conform, the ALJ ruled that an inference was to be drawn that the testimony, documents, or other evidence sought from that firm by complainant would be adverse to Conform. With respect to Unipak, the ALJ ordered that without further notice to that firm, the facts could be found to be as alleged in the complaint and the notice of investigation. In view of these firms' refusal to participate in discovery and the ALJ's finding that the Commission has jurisdiction over them, we agree with the ALJ that, on the record of this investigation, the processes used by Conform and

Unipak in manufacturing multicellular plastic film infringe the '984 patent.

I can see no other conclusion than that the findings of the ALJ and the ITC rest solely on the basis of an erroneous interpretation of the law, without any evaluation of the evidence.

The majority characterizes Unipak's conduct as arrogant and intransigent. I find the objections of Unipak entirely in order. Only the most formalistic tribunal would not deem Unipak's initial letter sufficient to avoid a default. Even though insufficient as a complete answer, it raised a jurisdictional defense which fairness required be ruled upon, with additional time being given for answer thereafter. Moreover, in view of our treaty obligations with Hong Kong,[4] the holding of in personam jurisdiction would have required taking into account the time periods and service requirements under the treaty, before default sanctions can be imposed.

Finally, the answer filed by Unipak's importer, the person who was actually found in violation of the statute, could also have been deemed an adequate answer with respect to Unipak products since, as the majority points out, the order operates against products, not persons. This court has previously held that a named respondent who is not an owner, importer, or consignee and whose interests are represented by another party to the proceeding, may be excluded involuntarily from participation in an ITC investigation even though it may be adversely affected by the order. Such person is not a necessary party. *Import Motors Ltd.* v. *U.S. International Trade Commission*, C3 CCPA 57, 530 F. 2d 940, 188 USPQ 491 (1976). No attack has been made on the answer of the importer of Unipak's products, and no finding was made that Unipak is an importer, owner, or consignee. Further, the Commission was fully advised of the relationship between Polybubble and Unipak. With respect to Unipak's products, therefore, unless the proceeding is in personam, as the ITC held, an answer as to Unipak's products has been made.[5]

The reliance by the Commission (but not the ALJ)and the majority on Unipak's alleged refusal to participate in discovery is to me anomalous. Without knowledge as to what was asked in the interrogatories, what facts are being inferred? Even with respect to this misconduct, Unipak did not fail to respond but rather objected to the interrogatories, the most standard response. Further, no evi-

[4] Hague Convention on the Service Abroad of Judicial and Extrajudicial Documents, 20 UST 361.

[5] The majority interjects its view that the importer's answer may be treated as insufficient, in order to justify disregarding its effect in this proceeding, notwithstanding that the pleadings therein parallel those in the Tong Sese answer. Further, the majority's view that the pleadings in the complaint concerning Unipak's process are in themselves sufficient to make out a prima facie case ignores that the pleadings are wholly conclusory, not factual. The allegations of the complaint are that all commercially feasible processes for making multicellular plastic film infringe Sealed Air's patent, a position rejected by this court in the companion appeal.

dentiary sanctions flow automatically from an objection or even from completely ignoring a set of interrogatories. Were that the case, trial court dockets would be relatively clear. It is incumbent upon the proponent under the ITC rules to seek an order compelling discovery.[6] Only if that is granted and ignored may the ALJ choose among the various sanctions which it is authorized to impose. None was asked for here, and none issued.

The majority views Unipak's actions as frustrating the ITC and sees no reason to place this lethal weapon in the hands of a foreign manufacturer. I cannot find the smoking gun. The lack of cooperation of a named respondent does not render the complainant nor the ITC impotent. Nor does it relieve the ITC from the requirements of the Administrative Procedures Act (APA), 5 U.S.C. 556(d), that an order must be supported by reliable, probative, and substantial evidence.[7] Evidence could have been sought from Unipak as a third party witness by deposition or letters rogatory.[8] I do not find it places too great a burden on a complainant to have to obtain evidence in order to be entitled to the sweeping relief afforded by an exclusion order. The rights being enforced here are essentially private rights. If the complaint shows that the matter is of sufficient public interest, the ITC can assist by obtaining evidence on its own.

It is apparent from the ITC's above-quoted letter to Unipak that the complainant was fully prepared to proceed with obtaining evidence in Hong Kong. The ALJ's holding of in personam jurisdiction and infringement by default early in the proceedings made that unnecessary. This ruling, subsequently adopted by the Commission, was determinative of the outcome. The majority's statement that it was not is contradicted not only by the record but also by its own opinion.

The majority does not answer the issue raised by this appeal, namely, whether the ITC has in personam jurisdiction over Unipak, ruling instead that that determination is irrelevant. I agree that in personam jurisdiction is irrelevant to the power of the ITC to issue exclusion orders affecting Unipak's products, but it is not irrelevant to the findings which were advanced to support the order in this case. It is critical. In my view the ITC's interpretation of its authority is clearly in error and the majority's sanction of the result of the proceedings below violates fundamental precepts of administrative law.

The ITC's investigative authority

The ITC, like any other administrative agency or board, is entirely the creature of statute. *Civil Aeronautics Board* v. *Delta Air Lines*,

---

[6] 19 CFR 210.36.

[7] ITC has subsequently recognized this requirement in *In re Certain Rotary Scraping Tools*, 208 USPQ 356 (1980).

[8] The Hague Convention on the Taking of Evidence Abroad, 23 UST 2555, would have assisted complainant.

Inc., 367 U.S. 316 (1961); *Soriano* v. *United States*, 494 F. 2d 681 (CA 9 1974). Any authority delegated or granted to an administrative agency is necessarily limited to the terms of the delegating statute. As Chief Justice Warren said in *Civil Aeronautics Board*, *supra*, at 322, "[T]he determinative question is not what the Board thinks it should do, but what Congress has said it can do."

The Government and Sealed Air in their briefs on appeal, and the ALJ who made the recommendation for the finding of in personam jurisdiction adopted by the ITC, do not look to the statute as the jurisdictional base, but find, under the precedent of *International Shoe Co.* v. *Washington*, 326 U.S. 310 (1945), that the assertion of in personam jurisdiction over Unipak would not violate basic principles of due process because Unipak can be found to have had sufficient minimum contacts with the United States. In *International Shoe*, there was no question that the court of the forum had by statute been given such jurisdiction. The question was whether the jurisdictional statute violated due process requirements. *International Shoe* thus provides a test, not a grant, of authority. For authority, we must look to the statute.

In the proceeding under review, the ITC is acting pursuant to 19 U.S.C. 1337 and 1337a, the provisions of which are set out in the footnote.[9]

---

[9] To avoid confusion, one must note that 1337(a) and 1337a are separate sections of the statute.

Section 1337

(a) Unfair methods of competition and unfair acts in the importation of articles into the United States, or in their sale by the owner, importer, consignee, or agent of either, the effect or tendency of which is to destroy or substantially injure an industry, efficiently and economically operated, in the United States, or to prevent the establishment of such an industry, or to restrain or monopolize trade and commerce in the United States, are declared unlawful, and when found by the Commission to exist shall be dealt with, in addition to any other provisions of law, as provided in this section.

(b)(1) The Commission shall investigate any alleged violation of this section on complaint under oath or upon its initiative.

* * * * * * *

(c) The Commission shall determine, with respect to each investigation conducted by it under this section, whether or not there is a violation of this section. Each determination under subsec. (d) or (e) of this section shall be made on the record after notice and opportunity for a hearing in conformity with the provisions of subch. II of ch. 5 of title 5. All legal and equitable defenses may be presented in all cases. Any person adversely affected by a final determination of the Commission under subsec. (d), (e), or (f) of this section may appeal such determination to the U.S. Court of Customs and Patent Appeals. Such court shall have jurisdiction to review such determination in the same manner, and subject to the same limitations and conditions, as in the case of appeals from decisions of the U.S. Customs Court.

(d) If the Commission determines, as a result of an investigation under this section, that there is violation of this section, it shall direct that the articles concerned, imported by any person violating the provision of this section, be excluded from entry into the United States, unless, after considering the effect of such exclusion upon the public health and welfare, competitive conditions in the U.S. economy, the production of like or directly competitive articles in the United States, and U.S. consumers, it finds that such articles should not be excluded from entry. The Commission shall notify the Secretary of the Treasury of its action under this subsection directing such exclusion from entry, and upon receipt of such notice, the Secretary shall, through the proper officers, refuse such entry.

* * * * * * *

Section 1337a

The importation for use, sale, or exchange of a product made, produced, processed, or mined under or by means of a process covered by the claims of any unexpired valid U.S. Letters Patent, shall have the same status for the purposes of sec. 1337 of this title as the importation of any product or article covered by the claims of any unexpired valid U.S. Letters Patent.

In addition, general provisions applicable to all types of proceedings before the ITC and pertinent here are found in 19 U.S.C. 1331, 1333, and 1335.[10]

No provision can be found in any grant of power to the ITC for service of a complaint and notice of investigation in a section 1337 investigation, the type of provision which indicates in personam jurisdiction. Nor is a named respondent required by the statute to answer.[11] That most may choose to do so in order to influence the outcome of the investigation may well be likely, but the consequences of failing to answer under the ITC's own rules is not a default judgment but the waiver of a right to participate.[12] The rule prevents one from attempting to enter the proceedings at a later date. It must be kept in mind that the ITC does not issue a summons to bring parties before the tribunal; it issues a notice to satisfy due process requirements. The concepts are fundamentally different.

The absence of legislative authorization for in personam jurisdiction cannot be treated as a mere inadvertence. A commission can function which has been given no more than a mandate to investigate into certain subject matter and must rely on voluntary cooperation to obtain the information it needs.[13]

To add force to the conduct of an agency's investigations, an agency can be given subpena power or it can be given in personam jurisdiction over domestic or over domestic and foreign persons, or it can be given any combination of these forms of compulsory process. The choice is that of Congress, not the agency or the courts. Each of these powers must be found separately in the legislative grant. An agency can be challenged if it seeks to invoke compulsory process against persons over whom it has been given no such authority, *Serr* v. *Sullivan*, 270 F. Supp. 544, aff'd 390 F. 2d 619 (CA 3 1968), or if it operates beyond the scope of its subject matter jurisdiction. *Canadian Pacific Ltd.* v. *United States*, 379 F. Supp. 128 (D DC 1974). Each is a separate ground for invalidating agency action. *Leasco Data Processing Equipment Corp.* v. *Maxwell*, 468 F. 2d 1326 (CA 2 1972). Moreover, even where a statute provides for personal jurisdiction, such authority does

---

[10] Sec. 1331(d) provides that the Commission may prosecute any inquiry anywhere in the United States or in any foreign country. Sec. 1333 provides for subpena of witnesses and documents. Sec. 1335 authorizes the adoption of reasonable rules and regulations.

[11] Cf. 15 U.S.C. 45 (b) and (f) for statutory authorization of this kind and Justice Brandeis' comparison of statutory requirements for answer relating to the FTC and to the ICC in *Federal Trade Comm.* v. *Klesner*, 280 U.S. 19, at 25–27 (1929).

[12] 19 CFR 210.21(d):

> (d) *Default.* Failure of a respondent to file a response within the time provided for in subsection (a) of this section may be deemed to constitute a waiver of its right to appear and contest the allegations of the complaint and of the notice of investigation, and to authorize the presiding officer, without further notice to that respondent, to find the facts to be as alleged in the complaint and notice of investigation and to enter a recommended determination (or a determination if the Commission is the presiding officer) containing such findings.

[13] *Administrative Law*, Bernard Schwartz, Little, Brown & Co., (1976), p. 104.

best copy available

not extend to persons outside the territorial jurisdiction unless it is written specifically to apply to them, or at least in such broad terms as to warrant interpretation that service abroad was intended to be included.[14]

Judge Friendly, in *Leasco Data Processing Equipment Corp.* v. *Maxwell*, supra, was faced with challenges against the exercise of authority by the SEC over nonresidents. His opinion elucidates on the distinction between subject matter jurisdiction and personal jurisdiction and is instructive as to the type of examination of a statute which must be made and which was not made below or by the majority.[15]

Had such an examination been made, the only conclusion is that Congress did not give the ITC in personam jurisdiction under the subject statute as originally enacted, and no change in this respect was made by the amendments of the Trade Act of 1974.

The compulsory process which has been given to the ITC is broad subpena power under 19 U.S.C. 1333. In addition, the ITC has been given authority to investigate on its own in the United States or abroad under 19 U.S.C. 1331(d).

This is the extent of the ITC's authorized powers in conducting a section 1337 investigation, as well as others for which it has responsibility, and its powers have remained unchanged since the creation of its predecessor, the Tariff Commission, in 1916 (39 Stat. 975).

Investigations by the Tariff Commission relating to unfair methods of competition in the importation of articles into the United States were first authorized by the Tariff Act of 1922 (42 Stat. 943). As originally conceived, the Commission made a recommendation to the President, after investigating a complaint and making a determination that there were unfair acts which justified either an exclusion order against importation of certain goods or a punitive duty. The issuance of the order was by the President, but such an order had to be supported by the findings of the Commission. *In re Orion Co.*, 22 CCPA 149, 71 F. 2d 458, 21 USPQ 563 (1934).

The purpose of the exclusion remedy was to get away from in personam procedures which United States business found unsatisfactory. Being unable in most cases to sue a foreign supplier, a U.S. business faced with infringing products from abroad was forced to pursue a multiplicity of individual importers, and if a court enjoined one, another could be found to take his place. Thus the exclusion remedy was conceived.

---

[14] For example, see U.S.C. 1451(b); 35 U.S.C. 146, 293; 15 U.S.C. 77v(a), 78aa, 79y; 28 U.S.C. 1655; 38 U.S.C. 784(a).

[15] The majority refers to evidence to support a finding of in personam jurisdiction, without looking for a statutory base.

In 1974 the authority and procedures of the ITC were changed in significant respects. The ITC is now authorized to issue exclusion orders, with the President having in effect a veto over such action. Congress also provided for a broader scope of inquiry by the ITC. For example, previously the ITC did not consider questions of patent validity; now it must include a validity determination. On appeal, this court is no longer bound to accept findings of fact whenever supported by some substantial evidence and will not when clearly contrary to the weight of the evidence. *Solder Removal Co.* v. *U.S. International Trade Commission*, 65 CCPA 120, 582 F. 2d 628, 199 USPQ 129 (1978). Broader protection was given to litigants by clear identification of section 1337 investigations as adjudications to be made on the record after notice and opportunity for hearing and specific incorporation of the Administrative Procedure Act (19 U.S.C. 1337 (c)). Significantly, no change was made in what compulsory process is available to the ITC. In personam jurisdiction cannot be found in the statute.[16]

The decision below turned on the finding that the ITC had in personam jurisdiction over Unipak. If that basis is not accepted, the order must be vacated and the case remanded. It is for the ITC to judge initially whether its findings are supportable on the record if in personam jurisdiction is not required to support them. Not even the broadest reading of the *Chenery* case, supra, allows this court to substitute evidentiary findings for the findings below. The *Chenery* case and its long line of progeny clearly prohibits this court from making the first evaluation of the evidence or inferring that such an evaluation was made below from the pro forma reference to the record.

Since the majority and I are in basic disagreement as to the holding in *Chenery*, supra, more than passing reference must be given to the case. The issue in *Chenery* was very similar to that of the instant case. Under review was an order by the Securities and Exchange Commission approving a plan of reorganization of a company. Over objections by respondents, certain preferred stock which respondents had acquired, unlike preferred stock of others, could not be converted into stock of the reorganized company. The Commission did not find any fraudulent acts in the acquisition of the stock by the respondents, but relied upon the fact that the respondents were reorganization managers. The Commission, by analogy, applied the legal restrictions imposed on trustees to respondents, relying on broad equitable principles. The Supreme Court stated:

---

[16] The majority relies on the authority of the ITC to make reasonable rules of procedure. 19 U.S.C. 1335. No rule or regulation can expand the basic jurisdiction of the ITC. *Soriano* v. *United States*, 494 F. 2d 681 (CA 9 1974); *Federal Maritime Comm.* v. *Anglo-Canadian Shipping Co.*, 335 F. 2d 255 (1964). Nor did the ITC follow its rules here, which it was obligated to do, if sanctions for failure to make discovery were to be imposed.

> Since the decision of the Commission was explicitly based upon the applicability of principles of equity announced by courts, its validity must likewise be judged on that basis. The grounds upon which an administrative order must be judged are those upon which the record discloses that its action was based. [318 U.S. at 87.]

After remand, the case came before the Supreme Court again in *SEC* v. *Chenery Corp.*, 332 U.S. 194 (1947). In the second case, different grounds were advanced and these were upheld. The Court stated:

> When the case was first here, we emphasized a simple but fundamental rule of administrative law. That rule is to the effect that a reviewing court, in dealing with a determination or judgment which an administrative agency alone is authorized to make, must judge the propriety of such actions solely by the grounds invoked by the agency. If those grounds are inadequate or improper, the court is powerless to affirm the administrative action by substituting what it considers to be a more adequate or proper basis. To do so would propel the court into the domain which Congress has set aside exclusively for the administrative agency.
>
> We also emphasized in our prior decision an important corollary of the foregoing rule. If the administrative action is to be tested by the basis upon which it purports to rest, that basis must be set forth with such clarity as to be understandable. It will not do for a court to be compelled to guess at the theory underlying the agency's action; nor can a court be expected to chisel that which must be precise from what the agency has left vague and indecisive. In other words, "We must know what a decision means before the duty becomes ours to say whether it is right or wrong." [332 U.S. at 196–97.] [Citation omitted.]

The quotation in the *Chenery* case noted by the majority that a decision may be affirmed if the result is correct, "although the lower court relied upon a wrong ground or gave a wrong reason," is taken from *Helvering* v. *Gowran*, 302 U.S. 238, 245 (1937). In *Helvering* the alternative grounds had been argued before the first decisionmaker, in that case the Commissioner of Internal Revenue, and different grounds had been adopted by the Board of Tax Appeals. The reviewing appellate court adopted the Commissioner's position. The Supreme Court affirmed, but even in *Helvering* the Court remanded to give the petitioner an opportunity to put in additional evidence because of the change in the basis for the decision. No support can be found in *Chenery* or *Helvering* for this court to uphold an order by interjecting a new ground, sua sponte, which was not advanced by the Government, briefed by the parties, or argued to this court, and which requires an evaluation of evidence. Such an evaluation is specifically

proscribed in *Chenery*. The statement quoted by the majority is followed by:

> But it is also familiar appellate procedure that where the correctness of the lower court's decision depends upon a determination of fact which only a jury could make but which has not been made, the appellate court cannot take the place of the jury. Like considerations govern review of administrative orders. [318 U.S. at 88.]

The prohibition against substitution of this court's judgment cannot be escaped by relying on the ITC's conclusory statement that "on the record" the Unipak process has been found to be an infringement. *Chenery* requires not only findings but an explanation.

In *State Corp. Com'n of Kansas* v. *FPC*, 206 F. 2d 690 (CA 8 1953), the court remanded where the Commission order under review stated explicitly that the Commission had examined "all of the available evidence of record."

In *NLRB* v. *Clement-Blythe Co.*, 415 F. 2d 78 (CA 4 1969), an order entered after a summary judgment proceeding before the NLRB was vacated and remanded for the following reasons:

> [T]he use of summary judgment in deciding whether an employer has committed an unfair labor practice does not exempt the Board from complying with the Administrative Procedure Act [5 U.S.C. section 557(c)].* * *
>
> * * * * * * *
>
> When the Board rules that an employer has committed an unfair labor practice, the employer is entitled to know, and the Board is charged with the duty of stating, the reasons why the Board concluded the facts showed a violation of the law. [*Id.* at 81.]
>
> * * * * * * *
>
> [L]ack of clarity in the administrative process infects review with guesswork. [*Id.* at 82.]

See also *Burlington Truck Lines, Inc.* v. *United States*, 371 U.S. 156, 167–68 reaffirming the *SEC* v. *Chenery Corp.* requirements that the order be upheld on the basis articulated by the agency itself and that findings below must be specific.

Moreover, the absence of required findings is fatal even though there may be ample evidence to make the finding.[17] As stated in *Anglo-Canadian Shipping Co.* v. *Federal Maritime Commission*, 310 F. 2d 606, 617 (CA 9 1962):

> For the Commission, without any attempt whatever to comply with the requirements of section 8(b) [now 5 U.S.C. 557(c)], to

[17] There is no ample evidence here. Mr. Fielding's testimony is contradicted by the testimony of the ITC staff that the extrusion process of Unipak, like that of Tong Sese, was not an infringement.

> issue its conclusory order of January 23, 1962, merely in the language of the statute, was an egregious error.
>
> As noted in [*Saginaw Broadcasting Co.* v. *FCC*, 96 F. 2d 554, 563 (1938)], the absence of required findings is fatal to the validity of an administrative decision regardless of whether there may be in the record evidence to support proper findings. We were not required therefore to inquire as to what evidence there was which might have supported adequate findings. * * *

The requirement for specific, definite, and basic findings, not mere ultimate findings or conclusions, is well settled and without contradiction. See *United States* v. *Pierce Auto Freight Lines*, 327 U.S. 515 (1946); *Colorado-Wyoming Co.* v. *Federal Power Commission*, 324 U.S. 626 (1945); *Morgan* v. *United States*, 298 U.S. 468 (1936); *United States* v. *Chicago, M. St. P. & P.R. Co.*, 294 U.S. 499 (1935); *Florida* v. *United States*, 282 U.S. 194 (1931); Davis Administrative Law Treatise, chapter 16, paragraphs 16.01–16.14.

Since there are no findings in the order below other than conclusory findings as to Unipak and Conform and their importers, the order is not in conformity with 5 U.S.C. 557(d) (APA). The order should be vacated and the case remanded for review by the ITC of the evidence, with consideration being given to requests by all parties to submit additional evidence in view of the numerous procedural errors which resulted in no foundation for its issuance.

The scope of the order

The majority modifies the effect of the order below by placing Unipak in the same position as every other foreign manufacturer of multicellular plastic film who was not a party to the proceeding. All multicellular plastic film products, except those of Tong Seae are blocked until a determination is made by the ITC in a subsequent proceeding that they are made by a noninfringing process.

I have previously expressed my views that the ITC may not issue an exclusion order broader than the investigation it noticed and conducted.[18] In this case, it is particularly offensive that the ITC has invoked sanctions against an entire industry throughout the world on the basis of technical defaults by two named respondents.

What has occurred here results from broad judicial construction, tno congressional action. This court endorsed the concept that patent infringement without other unfair acts, such as false advertising or unfair pricing (both alleged by complainant here but not found below) constitutes an unfair method of competition within the meaning of 19 U.S.C. 1337. Such other acts, which originally were considered an inherent requirement in the statute, pinpointed who were violators.

---

[18] *Canadian Tarpoly Co.* v. *U.S. International Trade Commission*, appeal No. 81-5, dissenting opinion of Feb. 5, 1981.

Assuming that the judicial interpretation which finds patent infringement per se enough under section 1337 is correct, it does not follow that orders may issue against an industry. The ITC is engaged in adjudication, not industrywide rulemaking, in the type of proceeding here under review.

ERRATUM

In CUSTOMS BULLETIN No. 9, volume 15, dated March 4, 1981, pages 7–17, Appeals No. 81–5 was erroneously printed. Appeals No. 81–5 appeared in CUSTOMS BULLETIN No. 8, dated February 25, 1981.

United States Court of International Trade

One Federal Plaza
New York, N.Y. 10007

Chief Judge

Edward D. Re

Judges

Paul P. Rao
Morgan Ford
Scovel Richardson
Fredrick Landis
James L. Watson
Herbert N. Maletz
Bernard Newman
Nils A. Boe

Senior Judge

Samuel M. Rosenstein

Clerk

Joseph E. Lombardi

DECISION OF THE UNITED STATES COURT OF INTERNATIONAL TRADE

(Slip Op. 81–21)

MAST INDUSTRIES, INC., PLAINTIFF, *v.* UNITED STATES, DEFENDANT

Court No. 79–4–00707

Before RICHARDSON, Judge

WEARING APPAREL (LADIES PANTS)

Assembled Articles—Fabricated components—Incidental Operations

Precut fabric components of women's pants were exported from the United States to El Salvador for assembly into finished garments. In El Salvador, in addition to sewing the components together they were subjected to buttonholing or pocket slitting operations which the

Customs Service determined were not assembly operations, but were fabrication or manufacturing operations which advanced the value and improved the condition of the unfinished components. The importer contended that said operations were assembly operations or, alternatively, operations incidental to assembly which should not have been denied exemptions from duty under item 807.00 of the Tariff Schedules of the United States (19 U.S.C. 1202 et seq.).

Held, after buttonholing and pocket slitting, according to the evidence, the components are physically identifiable in the completed pants and have not been changed in shape, form or otherwise. Also, they have not been advanced in value or improved in condition except by operations incidental to assembly. *Rudolph Miles* v. *United States*, 65 CCPA 32, C.A.D. 1202, 567 F. 2d 979 (1978) followed. *Zwicker Knitting Mills* v. *United States*, 67 CCPA ——, C.A.D. 1240, 613 F. 2d 295 (1980) distinguished.

[Judgment for plaintiff.]

(Decided March 6, 1981)

Mandel & Grunfeld (*Sieven P. Florsheim* and *Robert B. Silverman* at the trial and on the briefs) for the plaintiff.

Thomas S. Martin, Acting Assistant Attorney General; *Joseph I. Liebman*, Attorney in Charge, International Trade Field Office, Commercial Litigation Branch (*Susan C. Cassell* at the trial; *Saul Davis* on the brief), for the defendant.

RICHARDSON, Judge: The merchandise in this case consists of women's pants which were exported from El Salvador in May and June 1978, and classified in liquidation upon entry at Miami under TSUS item 382.33 as other women's apparel not ornamented at the duty rate provided for in accordance with TSUS item 807.00. In issue is the dutiability of certain U.S. components of the pants which were subjected to buttonholing or pocket slitting operations in El Salvador. The Customs Service disallowed item 807.00 treatment for the components by reason of these operations.

The importer contends that the buttonholding and pocket slitting operations are assembly operations, or, alternatively, are operations incidental to assembly, so as to entitle the components to item 807.00 treatment. Item 807.00 provides for a duty upon the full value of the imported article, less the cost or value of such products of the United States of:

> Articles assembled abroad in whole or in part of fabricated components, the product of the United States, which (a) were exported in condition ready for assembly without further fabrication, (b) have not lost their physical identity in such articles by change in form, shape, or otherwise, and (c) have not been advanced in value or improved in condition abroad except by being assembled and except by operations incidental to the assembly process such as cleaning, lubricating, and painting.

It is admitted in the pleadings that the imported pants are articles assembled abroad in whole or in part of fabricated components the product of the United States. All customs service regulations relating to item 807.00 have been complied with, and there is no question in the case regarding the cost or value of the U.S. components in the imported pants, nor the value of the slit fabric components in these pants.

Through their stipulation (R. 48), the parties have agreed that:

(i) All components utilized in the two styles of pants involved in this case—style numbers 4083 and 4086—were of U.S. origin.

(ii) The cost or value of the U.S. components for these pants, per dozen was:

Style 4083—$62.197

Style 4086—$61.443

(iii) The cost or value of the U.S. components of the subject pants, for which duty allowances were made under TSUS item 807.00 by Customs, per dozen, was:

Style 4083—$50.284

Style 4086—$34.083

(iv) The cost or value of the U.S. components of the subject pants which have buttonholes and/or pocket slits (and for which no duty allowances under TSUS item 807.00 were made by Customs) per dozen, was:

Style 4083—$11.913 ($62.197 less $50.284)

Style 4086—$27.36 ($61.443 less $34.083)

In the two styles of women's pants involved, styles 4083 and 4086, the fabric components were all cut to shape in the United States prior to exportation to El Salvador. Witnesses called by plaintiff testified at the trial in detail as to operations which took place in El Salvador. From the witnesses it was brought out that in El Salvador the fabric components [corduroy] were sewn together, after which buttonholes were placed in one or more of the waistbands, pocket flaps, suspenders or fly fronts on both styles of pants, and pocket slits were made. When finished style 4083 was held up by three buttons on the fly front and two strips tied across the top. Style 4086 had a zipper on the fly front with two buttons at the top, and suspenders.

The buttonholing and pocket slitting operations were described by plaintiff's production manager, Salvatore Fasciana. With respect to the buttonholing operation, Mr. Fasciana testified that the buttonholes were made with a Reece S–2 buttonholing machine. He said the fabric is clamped onto the flatbed surface of the machine by depressing a foot pedal part way. He stated that when the pedal is completely depressed the stitching for the buttonhole is made, and then, a knife comes down and slits the fabric between the stitching for the buttonhole opening—the machine cycle time for the operation taking 2.5 hundredths of a minute [1.5 seconds].

With respect to the rear pocket slitting operation, Mr. Fasciana explained as follows: The pocket is made up of precut fabric components consisting of facing, welt, pelon-type interlining, and front and back pocketing. First, the lower edges of the welt and facing are overlocked to prevent fraying and are sewn to the respective pocketing pieces. The location of the pocket is marked on the rear quarter panel pants leg. The welt and facing subassemblies are placed on either side of the marking on the outer side of the rear quarter panel. A Singer 112W140 sewing machine is then used to simultaneously sew the facing and welt onto the outer side of the rear quarter panel and cut a slit [pocket opening] into the rear quarter panel between the facing and welt pieces. Two small diagonal cuts are then made on either side of the pocket opening. The welt and facing subassemblies are then turned [pushed] through the pocket opening to the inner side of the rear quarter panel.

The welt and facing seams are then top stitched with a double needle sewing machine. The ends of the pocket opening are bar tacked, and, on style 4086, a buttonhole is made. The welt and facing subassemblies are then turned through the pocket opening to the outer side of the rear quarter panel once again. The pocket bag is then formed by sewing the pocketing pieces together. The bag is then turned through the pocket opening again, and the stitching of the pocket bag completed. On style 4083, the pocket closure loop is inserted during the sewing operation with the Singer 112W140 machine.

Enrique Siman, owner and manager of the El Salvadoran factories where the pants were put together, testified that 35 or 40 operations, depending upon which style of pants is involved, were required to put together the imported pants. He stated that 70 employees did the work, 1 of whom operated the buttonhole machine and another did the rear pocket slitting. According to the witness, approximately 35 minutes was required to complete a pair of pants, of which 8 to 10 seconds were consumed in the buttonholing operation while 15 to 20 seconds were consumed in the rear pocket slitting operation.

Mr. Siman said that the labor cost for the buttonholing operation was ¾ centavos [0.0075 colones] each, and 2.5 centavos [0.025 colones] each for pocket slitting, as against a total labor cost of 1.36 colones for the style 4083 pants and 1.40 colones for the style 4086 pants which took a little longer to finish.

Dorothy Moulla, a designer in plaintiff's employ, testified that she designed the imported pants and instructed the workers in El Salvador as to how the pants should be put together. She stated that the workers were not permitted to vary from the specifications

for the buttonholing and pocket slitting operations. The witness said that the buttonholes were a closing device to join two parts of the garment together. She said that the pocket slits served two purposes, (1) to permit completion of the pocket stitching since the pocket components must be turned through the slit to complete the sewing, and (2) to provide an opening for the pocket once it is completed.

John Ogden, plaintiff's administrative office manager and pants program coordinator, testified that all components for the pants, i.e., cut fabrics, trim such as elastic, buttons, and thread, were shipped to El Salvador at the same time.

Testimony introduced into the record on defendant's behalf from witnesses with extensive backgrounds in the ladies garment industry was to the effect that buttonholing and pocket slitting operations such as those described by witnesses called on plaintiff's behalf are regarded in the industry as manufacturing operations, and not as assembly operations.

Plaintiff argues that the making of buttonholes and pocket slits in the fabric pieces in El Salvador did not constitute further fabrication, and that such operations were operations incidental to assembly of the components. Defendant argues to the contrary.

The court agrees with plaintiff. In the court's opinion, buttonholing and pocket slitting the precut fabric pieces at bar in the manner testified constitute no more than the performance of operations incidental to the assembly of the various cut pieces into the two styles of women's pants here involved. The removal of unwanted material, or as in this case, the separation of such material from fabricated precut stock, is within the range of operations permitted during assembly of an article seeking to qualify for item 807.00 treatment upon entry. *Rudolph Miles* v. *United States*, 65 CCPA 32, C.A.D. 1202, 567 F. 2d 979 (1978). In the *Miles* case, the merchandise was Z-beams of U.S. manufacture which were incorporated into the assembly of railway boxcars in Mexico. Item 807.00 treatment for the Z-beams had been rejected by the lower court in sustaining the Customs Service's determination that the burning of holes and slots in the beams during their conversion into floating center sills constituted further fabrication of the beams. In reversing, the Court of Customs and Patent Appeals said (p. 37), "* * * burning the slots and holes * * * in 55-inch steel Z-beams to permit their assembly is not such substantial change as constitutes further fabrication. Rather, the processing in Mexico was merely part of the assembly of the Z-beams into center sills and incidental to the assembly process as provided in item 807.00(c)."

The court is unable to distinguish the instant case in principle from the *Miles* case. There is no question in the court's mind but that

slitting the fabric for buttonholing and pocket insertion purposes were relatively minor procedures, as was the preliminary remedial sewing in the buttonhole area. And the fact that these operations were accomplished by machines is of no moment in the overall assessment of their significance. In *Rudolph Miles* v. *United States*, *supra*, the object of burning holes and slots in beams with an acetylene torch was similar to the object of making buttonholes and pocket slits in ladies pants with machines. Moreover, on the circumstances detailed in this record, it would appear that a judicious regard for proper alinement of the affected areas in the garments dictated the deferral of these minor operations until assembly of the garments rather than at some prior time. Said operations were not such substantial changes as to constitute further fabrication. No new portion of the pants was made, and the cost of performing these operations, in terms of both labor and expense, was a small portion of the total cost of assembly.

Defendant argues that because bnttonholes and slash pockets possess utility to the seller and consumer of the pants independent of the assembly operations, the processing of the garment to achieve these utilitarian goals constitutes indicia of further fabrication. The court does not see how the ultimate use of the garment has any bearing on the application of the statutory criteria. Buttonholes and slash pockets were an integral part of the design concept of the imported pants from the outset, and the attainment of that object was merely an incident of the assemblage of the various component parts—the only significant work remaining to be done when the components were exported to El Salvador. Indeed, defendant itself correctly observed this correlation of the various aspects of the assembly process when it called attention in its brief [p. 62] to the legislative history of item 807.00 wherein Congress acknowledged that the "remov[al] [of] small amounts of excess material" came within the scope of operations incidental to assembly even if they result in an advance in value of the U.S. components. H.R. Rept. No. 342, 89th Cong., 1st session, pages 48, 49 (1965).

The case of *Zwicker Knitting Mills* v. *United States*, 67 CCPA ——, C.A.D. 1240, 613 F. 2d 295 (1980) on which defendant relies does not compel a different conclusion. Zwicker involved a fingertipping operation performed abroad on glove shells exported from the United States minus the fingertips. And, unlike the situation at bar which involved only a separation or removal for an opening in fabricated material, the Zwicker operation involved an addition of material to close the fingertips. It was this addition of material which influenced the courts in *Zwicker* to find that the tipping operation constituted a further fabrication of the gloves which is proscribed by item 807.00(a).

The court finds that plaintiff is entitled to the allowances accorded under item 807.00, for operations incidental to assembly, and so holds. Judgment will be entered herein accordingly.

Decisions of the United States Court of International Trade

Abstracts

Abstracted Protest Decision

DEPARTMENT OF THE TREASURY, *March 9, 1981.*

The following abstracts of decisions of the United States Court of International Trade at New York are published for the information and guidance of officers of the customs and others concerned. Although the decisions are not of sufficient general interest to print in full, the summary herein given will be of assistance to customs officials in easily locating cases and tracing important facts.

WILLIAM T. ARCHEY,
Acting Commissioner of Customs.

DECISION NUMBER	JUDGE & DATE OF DECISION	PLAINTIFF	COURT NO.	ASSESSED	HELD	BASIS	PORT OF ENTRY AND MERCHANDISE
				Par. or Item No. and Rate	Par. or Item No. and Rate		
P81/25	Maletz, J. March 2, 1981	Carmichael International Service, a/c Mfrs. Disc. Furniture & Bedding, et al.	78-2-00298, etc.	Item 359.50 25¢ per lb. + 30%	Item 346.60 15¢ per lb. + 25%	Agreed statement of facts	Los Angeles Rayon pile fabric, in the piece

Decisions of the United States Court of International Trade

Abstracts

Abstracted Reappraisement Decisions

DECISION NUMBER	JUDGE & DATE OF DECISION	PLAINTIFF	COURT NO.	BASIS OF VALUATION	HELD VALUE	BASIS	PORT OF ENTRY AND MERCHANDISE
R81/79	Re, C.J. March 2, 1981	Asea Inc.	76-1-00175	Export value	Equal to invoiced unit prices, net packed, as set forth in entries and invoices	C.B.S. Imports Corp. v. U.S. (C.D. 4739)	Portland, Oreg. Electrical equipment and apparatus
R81/80	Re, C.J. March 2, 1981	Asea Inc.	76-2-00503-S	Export value	Equal to invoiced unit prices, net packed, as set forth in entries and invoices	C.B.S. Imports Corp. v. U.S. (C.D. 4739)	Electrical equipment and apparatus

R81/81	Re, C.J. March 2, 1981	Asea Inc.	76-10-02299	Export value	Equal to invoiced unit prices, net packed, as set forth in entries and invoices	C.B.S. Imports Corp. v. U.S. (C.D. 4739)	New Orleans Electrical equipment and apparatus
R81/82	Re, C.J. March 2, 1981	Asea Inc.	77-4-00587	Export value	Equal to invoiced unit prices, net packed, as set forth in entries and invoices	C.B.S. Imports Corp. v. U.S. (C.D. 4739)	Norfolk Electrical equipment and apparatus
R81/83	Re, C.J. March 2, 1981	Hamilton Klauber, Inc.	74-4-00941, etc.	Export value	Appraised values less additions included to reflect currency revaluation	C.B.S. Imports Corp. v. U.S. (C.D. 4739)	New York Wearing apparel, etc.
R81/84	Re, C.J. March 2, 1981	Huffman Manufacturing Company	78-7-01206	Export value	Invoice unit values appearing on invoices covered by entries on schedule "A" attached to decision and judgment	C.B.S. Imports Corp. v. U.S. (C.D. 4739)	Los Angeles Various articles
R81/85	Re, C.J. March 4, 1981	United Merchants & Mfrs. Inc.	74-5-01407, etc.	Export value	Appraised values less additions included to reflect currency revaluation	C.B.S. Imports Corp. v. U.S. (C.D. 4739)	New York Wearing apparel, etc.

DECISION NUMBER	JUDGE & DATE OF DECISION	PLAINTIFF	COURT NO.	BASIS OF VALUATION	UNIT VALUE	BASIS	PORT OF ENTRY AND MERCHANDISE
R81/86	Watson, J. March 4, 1981	Ciba Chemical & Dye Div. Ciba Corporation	75-10-02758	United States value	U.S selling prices, less 1% cash discount as determined by customs officer at time of appraisement; less 29.2 % representing profit and general expenses usually made in U.S. on sales of dyestuffs of same class or kind; less costs of transportation and insurance from place of shipment to place of delivery in amounts determined by customs officer at time of appraisement; divided by 1.40 or such other factor applied by customs officer, to allow for customs duties payable on imported dyestuffs	U.S. v. Geigy Chemical Corporation et al. (C.A.D. 1185)	New York Benzenoid dyestuffs

R81/67	Watson, J. Mar.ch 4, 1981	Geigy Chemical Corporation or its successor Ciba-Geigy Corporation	73-9-02710	United States value	U.S. selling prices, less 1% cash discount as determined by customs officer at time of appraisement; less amcunts shown on column III of "Schedule of Appraisement and Claims" attached to decision and judgment representing profit and general expenses usually made in U.S. on sales of dyestuffs of same class or kind; less costs of transportation and insurance from place of shipment to place of delivery in amounts determined by customs officer at time of appraisement; divided by 1.40 or such other factor applied by customs officer, to allow for customs duties payable on imported dyestuffs	U.S. v. Geigy Chemical Corporation et al. (C.A.D. 1155)	New York Bensenoid dyestuffs

International Trade Commission Notices

Investigations by the U.S. International Trade Commission

DEPARTMENT OF THE TREASURY, April 19, 1981

The appended notices relating to investigations by the U.S. International Trade Commission are published for the information of Customs Officers and others concerned.

R. E. CHASEN,
Commissioner of Customs.

In the Matter of CERTAIN FOOD SLICERS AND COMPONENTS THEREOF	Investigation No. 337–TA–76

Notice of Termination of Albert E. Price, Inc. as Respondent

AGENCY: U.S. International Trade Commission.

ACTION: Termination of Albert E. Price as a party respondent in the above-captioned investigation.

SUMMARY: Having determined that this matter is properly before the Commission and having reviewed the record in this investigation, including the recommendation of the presiding officer and the joint motion to terminate (motion No. 76–13), and papers in support thereof, the Commission on March 2, 1981, granted a motion to terminate Albert E. Price, Inc., as a party respondent in investigation No. 337–TA–76.

SUPPLEMENTARY INFORMATION: This investigation, under section 337 of the Tariff Act of 1930, concerns alleged infringement of U.S. Letters Patent 3,766,817 by respondents E. Mishan and Sons, Albert E. Price, Inc., Crest Industries Corp., and Taiwan Timing Trading Co. The Commission instituted the investigation on December 4, 1979, and published notice thereof in the Federal Register on December 21, 1979 (44 F.R. 75733). On January 6, 1981, complainant Prodyne Enterprises, Inc., filed a motion (motion No. 76–13) to

terminate the investigation as to respondent Price on the basis of a settlement agreement entered into by Prodyne and Price on December 1, 1980. The presiding officer certified the motion to the Commission on January 19, 1981, and recommended that the motion be granted. The Commission published notice of a previous, very similar motion (motion No. 76–1) to terminate the investigation as to respondent Price in the Federal Register on July 16, 1980, for public comment (45 F.R. 47770), and, in addition, requested comments from government agencies pursuant to 19 CFR 210.14(a)(2).

Any party wishing to petition for reconsideration of the Commission's action must do so within fourteen (14) days of service of the Commission Action and Order. Such petitions must be in accord with Commission rule 210.56 (19 CFR 210.56).

Copies of the Commission's Action and Order in this matter and any other public documents in this investigation are available to the public during official working hours (8:45 a.m. to 5:15 p.m.) in the Office of the Secretary, U.S. International Trade Commission, 701 E Street, N.W., Washington, D.C. 20436, Telephone (202) 523–0161.

FOR FURTHER INFORMATION CONTACT: Warren H. Maruyama, Esq., Office of the General Counsel, U.S. International Trade Commission, 701 E Street NW., Washington, D.C. 20436; telephone 202–523–0143.

By order of the Commission.

Issued: March 2, 1981

KENNETH R. MASON,
Secretary.

In the Matter of CERTAIN AIRLESS PAINT SPRAY PUMPS AND COMPONENTS THEREOF	Investigation No. 337–TA–90

Notice Amending Hearing Date

Notice is hereby given that the hearing schedule noticed in order No. 6, issued December 30, 1980, is amended as follows:

Prehearing conference and hearing shall commence on March 31, 1981, at 10 a.m. in suite 201, 1010 Wisconsin Avenue NW., Washington, D.C.

The Secretary shall serve a copy of this notice on all parties and publish it in the Federal Register.

Issued: February 27, 1981

JUDGE DONALD K. DUVALL,
Presiding Officer.

Investigations Nos. 731–TA–31 (Final) and 731–TA–33 (Final)

PRECIPITATED BARIUM CARBONATE FROM THE FEDERAL REPUBLIC OF GERMANY AND STRONTIUM NITRATE FROM ITALY

AGENCY: U.S. International Trade Commission.

ACTION: Institution of final antidumping investigations.

SUMMARY: As a result of affirmative preliminary determinations by the U.S. Department of Commerce that there is a reasonable basis to believe or suspect that exports of precipitated barium carbonate from the Federal Republic of Germany and strontium nitrate from Italy are being, or are likely to be, sold in the United States at less than fair value (LTFV) within the meaning of section 731 of the Tariff Act of 1930 (19 U.S.C. 1673), the U.S. International Trade Commission (hereinafter "the Commission") hereby gives notice of the institution of investigations Nos. 731–TA–31 (final)—precipitated barium carbonate from the Federal Republic of Germany—and 731–TA–33 (final)—strontium nitrate from Italy—to determine whether an industry in the United States is materially injured, or is threatened with material injury, or the establishment of an industry in the United States is materially retarded, by reason of imports of such merchandise. For purposes of these investigations, precipitated barium carbonate and strontium nitrate mean those products provided for under items 472.06 and 421.74, respectively, of the Tariff Schedules of the United States (TSUS). These investigations will be conducted according to the provisions of part 207, subpart C, of the Commission's Rules of Practice and Procedure (19 CFR 207, 44 F.R. 76457).

EFFECTIVE DATE: February 13, 1981.

FOR FURTHER INFORMATION CONTACT: Mr. Robert Eninger, Office of Investigations, U.S. International Trade Commission, room 348, 701 E Street NW., Washington, D.C. 20436; telephone 202–523–0312.

SUPPLEMENTARY INFORMATION: On October 24, 1980, the Commission unanimously determined, on the basis of the information developed during the course of investigations Nos. 731–TA–31 (preliminary) and 731–TA–33 (preliminary), that there was a reasonable indication that an industry in the United States was materially injured or threatened with material injury by reason of imports of precipitated barium carbonate from the Federal Republic of Germany and strontium nitrate from Italy, provided for in items 472.06 and 421.74, respectively, of the TSUS, which were allegedly being sold in the United States at LTFV. As a result of the Com-

mission's affirmative preliminary determinations, the Department of Commerce continued its investigations into the question of LTFV sales. Unless the investigations are extended, the final LTFV determinations will be made by the Department of Commerce on or before May 4, 1981.

WRITTEN SUBMISSIONS: Any person may submit to the Commission a written statement of information pertinent to the subject of these investigations. A signed original and nineteen (19) true copies of each submission must be filed at the Office of the Secretary, U.S. International Trade Commission Building, 701 E Street NW., Washington, D.C. 20436, on or before May 14, 1981. All written submissions, except for confidential business data, will be available for public inspection.

Any submission of business information for which confidential treatment is desired shall be submitted separately from other documents. The envelope and all pages of such submissions must be clearly labeled "Confidential Business Information." Confidential submissions and requests for confidential treatment must conform with the requirements of section 201.6 of the Commission's Rules of Practice and Procedure (19 CFR 201.6).

A staff report containing preliminary findings of fact in each investigation will be available to all interested parties on April 29, 1981.

PUBLIC HEARING: The Commission will hold a public hearing in connection with these investigations on May 18, 1981, in the hearing room of the U.S. International Trade Commission Building, beginning at 10 a.m., e.d.t. Testimony will be received separately at the hearing for each investigation. Requests to appear at the hearing should be filed in writing with the Secretary to the Commission not later than close of business (5:15 p.m., e.d.t.), April 27, 1981. All persons desiring to appear at the hearing and make oral presentations must file prehearing statements and should attend a prehearing conference to be held at 10 a.m., e.d.t., on April 28, 1981, in room 117 at the U.S. International Trade Commission Building. Prehearing statements must be filed on or before May 14, 1981.

Testimony at the public hearing is governed by section 207.23 of the Commission's Rules of Practice and Procedure (19 CFR 207.23). This rule requires that testimony be limited to a nonconfidential summary and analysis of material contained in prehearing statements and to new information. The Commission will not receive prepared testimony for the public hearing, as would otherwise be provided for by rule 201.12(d). All legal arguments, economic analyses, and factual materials relevant to the public hearing should be included in prehearing statements in accordance with rule 207.22. Posthearing briefs will also be accepted within a time specified at the hearing.

For further information concerning the conduct of the investigations, hearing procedures, and rules of general application, consult the Commission's Rules of Practice and Procedure, part 207, subparts A and C (19 CFR 207), and part 201, subparts A through E (19 CFR 201).

This notice is published pursuant to section 207.20 of the Commission's Rules of Practice and Procedure (19 CFR 207.20, 44 F.R. 76458).

By order of the Commission.

Issued: March 3, 1981.

KENNETH R. MASON,
Secretary.

Investigation No. 104–TAA–2

OPTIC LIQUID-LEVEL SENSING SYSTEMS FROM CANADA

AGENCY: U.S. International Trade Commission.

ACTION: Institution of a countervailing duty investigation.

SUMMARY: On January 8, 1979, the Department of the Treasury published in the Federal Register notice of final countervailing duty determination and suspension of liquidation (44 F.R. 1728). The notice stated that Treasury had determined that exports of optic liquid-level sensing systems from Canada, manufactured by Honeywell Ltd , benefited from bounties or grants within the meaning of section 303 of the Tariff Act of 1930. Accordingly, imports of this merchandise into the United States have been subject to countervailing duties. On January 1, 1980, the provisions of title I of the Trade Agreements Act of 1979 became effective, and on January 2, 1980, the authority for administering the countervailing duty laws was transferred from Treasury to the Department of Commerce. On May 13, 1980, Commerce published a notice in the Federal Register (44 F.R. 31455) of intent to conduct an annual administrative review of all outstanding countervailing duty orders.

Although the U.S. International Trade Commission received a request for this investigation on December 27, 1979, the effective date of title I of the Trade Agreements Act of 1979, under which the request was filed, is January 1, 1980. The December 27, 1979, request was received from Honeywell Ltd., a request by the Canadian Government was received by the Commission on January 2, 1980.

As required by section 751(a)(1) of the Tariff Act of 1930, Commerce has conducted its first annual administrative review of the order on optic liquid-level sensing systems, manufactured in Canada by Honeywell Ltd. As a result, Commerce, in the Federal Register of

January 14, 1981 (46 F.R. 3261), preliminarily determined that the net subsidy conferred is 12 percent ad valorem of the f.o.b. invoice price. On the basis of that determination, the U.S. International Trade Commission, pursuant to section 104(b)(2) of the Trade Agreements Act, is instituting an investigation with respect to optic liquid-level sensing systems from Canada. Commerce reported that it would issue a final determination in this case after analysis of issues received in written comments or at a hearing. However, no hearing was requested and no written comments had been received by the deadline for their submission to Commerce, February 13, 1981. Commerce's final determination as to the most current level of subsidies will be made as soon as possible.

EFFECTIVE DATE: March 11, 1981.

FOR FURTHER INFORMATION CONTACT: John MacHatton, Supervisory Investigator, U.S. International Trade Commission, Washington, D.C. 20436 (202–523–0439).

SUPPLEMENTAL INFORMATION: The U.S. International Trade Commission is instituting this countervailing duty investigation to determine whether an industry in the United States would be materially injured, would be threatened with material injury, or the establishment of an industry in the United States would be materially retarded, by reason of imports from Canada of optic liquid-level sensing systems currently entered under item 685.90 of the Tariff Schedules of the United States covered by the countervailing duty if the order were to be revoked.

WRITTEN SUBMISSION: Any person may submit to the Commission a written statement of information pertinent to the subject matter of this investigation. A signed original and nineteen (19) true copies of each submission must be filed at the office of the Secretary, U.S. International Trade Commission Building, 701 E Street NW., Washington, D.C. 20436, on or before June 12, 1981. All written submissions, except the confidential business data, will be available for public inspection.

Any business information for which confidential treatment is desired must be submitted separately. The envelope and all pages of such submissions must be clearly labeled "Confidential Business Information." Confidential submissions and requests for confidential treatment must conform with the requirements of section 201.6 of the Commission's Rules of Practice and Procedure (19 CFR 201.6).

A staff report containing preliminary findings of fact in this investigation will be available to all interested parties on May 11, 1981.

PUBLIC HEARING: The Commission will hold a public hearing in connection with this investigation on June 3, 1981, in the hearing

room of the U.S. International Trade Commission Building, beginning at 10 a.m., e.d.t. Requests to appear at the hearing should be filed in writing with the Secretary to the Commission not later than the close of business (5:15 p.m., e.d.t.) on May 25, 1981. All persons desiring to appear at the hearing and make oral presentations must file prehearing statements and should attend a prehearing conference to be held at 10 a.m., e.d.t., on May 27, 1981, in room 117 of the U.S. International Trade Commission Building. Prehearing statements must be filed on or before May 27, 1981.

Testimony at the public hearing is governed by section 207.23 of the Commission's Rules of Practice and Procedure (19 CFR 207.23). This rule requires that testimony be limited to a nonconfidential summary and analysis of material contained in prehearing statements and to new information. The Commission will not receive prepared testimony for the public hearing, as would otherwise be provided for by rule 201.12(d). All legal arguments, economic analyses, and factual materials relevant to the public hearing should be included in prehearing statements in accordance with rule 207.22. Posthearing briefs will also be accepted within a time specified at the hearing.

For further information concerning the conduct of the investigation, hearing procedures, and rules of general application, consult the Commission's Rules of Practice and Procedure, part 207, subparts A and C (19 CFR 207), and part 201, subparts A through E (19 CFR 201).

This notice is published pursuant to section 207.20 of the Commission's Rules of Practice and Procedure (19 CFR 207.20, 44 F.R. 76458).

By order of the Commission.

Issued: March 12, 1981.

KENNETH R. MASON,
Secretary.

In the Matter of CERTAIN COIN-OPERATED AUDIO-VISUAL GAMES AND BROCHURES FOR THE ADVERTISEMENT THEREOF	Investigation No. 337–TA–87

NOTICE OF TERMINATION OF UNIVERSAL CO., LTD., UNIVERSAL U.S.A., INC., AND SUNRISE NEW SOUND, INC., AS RESPONDENTS

AGENCY: U.S. International Trade Commission.

ACTION: Termination of Universal Co., Ltd., Universal U.S.A., Inc.' and Sunrise New Sound, Inc., as party respondents in the above-captioned investigation.

SUMMARY: Having determined that this matter is properly before the Commission and having reviewed the record in this investigation, including the recommendation of the presiding officer, the joint motion to terminate (motion No. 87–15), and papers in support thereof, the Commission on March 3, 1981, granted a motion to terminate Universal Co., Ltd., Universal U.S.A., Inc., and Sunrise New Sound, Inc., as party respondents in investigation No. 337–TA–87.

SUPPLEMENTARY INFORMATION: This investigation is being conducted under the authority of section 337 of the Tariff Act of 1930 (19 U.S.C. 1337) and concerns alleged unfair trade practices in the importation into and sale in the United States of certain coin-operated audio-visual games and components thereof. The complainant, Midway Manufacturing Co., and respondents, Universal Co., Ltd., Universal U.S.A., Inc., and Sunrise New Sound, Inc., jointly moved to terminate the investigation as to the above-named respondents on the basis of a license agreement entered into on October 10, 1980. The presiding officer certified the motion to the Commission on November 24, 1980, with her recommendation that it be granted. The Commission then published for comment in the Federal Register notice of the motion to terminate and a nonconfidential version of the settlement agreement forming the basis therefor.

Any party wishing to petition for reconsideration of the Commission's action must do so within fourteen (14) days of service of the Commission's Action and Order. Such petitions must be in accord with Commission rule 210.56 (19 CFR 210.56).

Copies of the Commission's Action and Order in this matter and any other public documents in this investigation are available to the public during official working hours (8:45 a.m. to 5:15 p.m.) in the Office of the Secretary, U.S. International Trade Commission, 701 E Street NW., Washington, D.C. 20436, telephone 202–523–0161.

FOR FURTHER INFORMATIION CONTACT: Clarease E. Mitchell, Esq., Office of the General Counsel, U.S. International Trade Commission, 701 E Street NW., Washington, D.C. 20436; telephone 202–523–0148.

By order of the Commission.

Issued: March 5, 1981.

KENNETH R. MASON,
Secretary.

In the Matter of CERTAIN HOLLOW FIBER ARTIFICIAL KIDNEYS	Investigation No. 337–TA–81

NOTICE OF TERMINATION OF INVESTIGATION

AGENCY: U.S. International Trade Commission.

ACTION: Termination of investigation No. 337–TA–81, Certain Hollow Fiber Artificial Kidneys.

SUMMARY: The parties to this investigation have filed a joint motion to terminate based upon a settlement agreement. After reviewing the record, including comments from interested Federal agencies and private parties, the Commission has voted to terminate the investigation as to all issues and all parties.

SUPPLEMENTARY INFORMATION: In connection with the Commission's investigation under section 337 of the Tariff Act of 1930 (19 U.S.C. 1337) of alleged unfair methods of competition and unfair acts in the importation or sale of certain hollow fiber artificial kidneys in the United States, complainant Cordis Dow Corp., respondents Terumo Kabushiki Kaishi, Terumo America, Inc., Terumo Corp., and the Commission investigative attorney filed a motion on October 30, 1980 (docket No. 81–26) to terminate this investigation on the basis of a settlement agreement. The administrative law judge has certified the motion to the Commission with her recommendation that it be granted.

RECONSIDERATION: Any party wishing to petition for reconsideration of the Commission's action must do so within 14 days of service of the Commission Action and Order. Such petitions must be in accord with the Commission rule 210.56 (19 CFR 210.56).

PUBLIC ACCESS: Copies of the Commission's Action and Order, and any other public documents in the record of this investigation, are available for inspection during official working hours (8:45 a.m. to 5:15 p.m.) in the Office of the Secretary, U.S. International Trade Commission, 701 E Street NW., Washington, D.C. 20436, telephone 202–523–0161.

FOR FURTHER INFORMATION CONTACT: Scott Daniels, Esq., Office of the General Counsel, U.S. International Trade Commission, 701 E Street NW., Washington, D.C. 20436, telephone 202–523–0480.

By order of the Commission.

Issued: March 11, 1981.

KENNETH R. MASON,
Secretary.

In the Matter of CERTAIN UNIVERSAL JOINT KITS, COMPONENTS THEREOF, AND TRUNNION SEALS USED THEREWITH	Investigation No. 337–TA–93

NOTICE OF TERMINATION OF INVESTIGATION AS TO ONE RESPONDENT

AGENCY: U.S. International Trade Commission.

ACTION: Termination of the investigation as to respondent Kanematsu-Gosho (USA) Inc.

SUMMARY: Notice is hereby given that on the basis of a joint motion by Dana Corp. (the complainant), the Commission investigative attorney, and Kanematsu-Gosho (USA) Inc., the U.S. International Trade Commission has granted motion 93–3 to terminate the investigation as to respondent Kanematsu-Gosho (USA) Inc.

AUTHORITY: The authority for Commission disposition of this matter is contained in section 337 of the Tariff Act of 1930 (19 U.S.C. 1337) and in section 210.55 of the Commission's Rules of Practice and Procedure (19 CFR 210.55).

SUPPLEMENTARY INFORMATION: Copies of the Commission's Action and Order and all other nonconfidential documents filed in connection with this investigation are available for inspection during official business hours (8:45 a.m. to 5:15 p.m.) in the Office of the Secretary, U.S. International Trade Commission, 701 E Street NW., Washington, D.C. 20436, telephone 202–523–0161.

FOR FURTHER INFORMATION CONTACT: Jack Simmons, Esq., Office of the General Counsel, U.S. International Trade Commission, telephone 202–523–0350.

By order of the Commission.

Issued: March 12, 1981.

KENNETH R. MASON,
Secretary.

Index

U.S. Customs Service

	T.D. No
Treasury Decisions:	
Carriers Bond	81–52
Carriers Bond	81–55
Revocation of Customshouse Brokers License No. 3605, James Burnhart, as of February 3, 1981	81–54
Foreign Currencies:	
Daily rates for countries not on quarterly list, March 2–6, 1981	81–56
Variances from quarterly rates	81–57
Synopses of drawback decisions	81–53
Integrated circuits	81–53–A
Isophytol and trimethylhydroquinone	81–53–B
Phenyl malonic acid	81–53–C
Steel; aluminum tubing; motors, forgings; bearings	81–53–D
Orange juice for manufacturing, concentrated	81–53–E
81–53–F, 81–53–H, 81–53–I, 81–53–Y	
Magnesium ingots, unalloyed	81–53–G
Niobium pentoxide	81–53–J
Steel in sheets; bands; coil	81–53–K
Dimethyl formamide; triethylamine; various other chemicals	81–53–L
Brass and copper strip	81–53–M
Radios (auto and truck)	81–53–M
Steel coil, hot rolled	81–53–O
Memory spindle for computer system	81–53–P
Nitrodiphenylamine	81–53–Q
Semiconductor assemblies, unfinished	81–53–R
Semiconductor device, 16k access memory	81–53–S
Semiconductor devices, incompleted	81–53–T
Sugar, liquid and hard refined	81–53–V
Cetyl eicosyl alcohol	81–53–W
Isobutyl methacrylate	81–53–X
Tungsten concentrates; calcium tungstate; tungsten scrap	81–53–Z
Decisions of the U.S. Court of Customs and Patent Appeals:	C.A.D. No.
The United States v. *David E. Porter*	1259
The Ferriswheel v. *The United States*	1260
	C.A. No.
Sealed Air Corporation v. *U.S. International Trade Commission*	79–35
Polybubble Inc., Tong Seae Industrial, Co., Ltd., Unipak (H. K. Ltd., v. *U.S. International Trade Commission*	80–4

U.S. GOVERNMENT PRINTING OFFICE : 1981 O - 338-817

DEPARTMENT OF THE TREASURY
U.S. CUSTOMS SERVICE
WASHINGTON, D.C. 20229

OFFICIAL BUSINESS
PENALTY FOR PRIVATE USE, $300

U.S. GOVERNMENT PRINTING OFFICE: 1981

POSTAGE AND FEES PAID
DEPARTMENT OF THE TREASURY (CUSTOMS)
(TREAS. 552)

U.S.MAIL

15/14

Customs Bulletin

Regulations, Rulings, Decisions, and Notices concerning Customs and related matters

and Decisions

of the United States Court of Customs and Patent Appeals and the United States Court of International Trade

Vol. 15 APRIL 8, 1981 No. 14

NEWARK PUBLIC LIBRARY

APR 21 1981

U. S. GOVT. PUBS.
DEPOSITORY 376

This issue contains

T.D. 81-58 through 80-62
Appeals No. 80-19
Slip Op. 81-22 through 81-24
Protest Abstracts P81/26 through P81/35
Reap. Abstracts R81/88 through R81/96
International Trade Commission Notice

THE DEPARTMENT OF THE TREASURY
U.S. Customs Service

T 1.11/3:

NOTICE

The abstracts, rulings, and notices which are issued weekly by the U.S. Customs Service are subject to correction for typographical or other printing errors. Users may notify the U.S. Customs Service, Logistics Management Division, Washington, D.C. 20229, of any such errors in order that corrections may be made before the bound volumes are published.

For sale by the Superintendent of Documents, U.S. Government Printing Office, Washington, D.C. 20402. Price: $2.25 (single copy domestic); $2.85 (single copy foreign). Subscription price: $85.00 a year domestic; $106.25 a year foreign.

U.S. Customs Service

Treasury Decisions

(T.D. 81–58)

Importation and Exportation of Coffee Under the International Coffee Agreement of 1976

AGENCY: U.S. Customs Service, Department of the Treasury.

ACTION: General notice.

SUMMARY: This notice advises the importing and exporting community that import and export quotas for coffee have been established. Customs will administer these quotas through (1) limitation of importation of certain coffee, (2) prohibition of entry of other coffee without valid documentation, and (3) requirement of valid documentation of coffee exported or reexported from the United States. Accordingly, the text of the Customs operational guidelines and instructions to implement the above actions is reproduced below.

EFFECTIVE DATE: March 24, 1981

FOR FURTHER INFORMATION CONTACT: David O. Ramsay, Duty Assessment Division, U.S. Customs Service, 1301 Constitution Avenue NW., Washington, D.C. 20229; 202–566–2957.

SUPPLEMENTARY INFORMATION:

BACKGROUND

International Coffee Agreement of 1976

The United States is a Contracting Party to the International Coffee Agreement of 1976 (ICA), signed at New York on February 27, 1976, and which entered into force for the United States provisionally on October 1, 1976, and on August 1, 1977, definitively. Under article 70 of the ICA, that agreement shall be considered as a continuation of the International Coffee Agreement of 1968 as extended by protocol. The ICA, unless extended, shall remain in force for a period of 6 years, until September 30, 1982.

The International Coffee Organization (organization), established under the International Coffee Agreement of 1962, administers the

provisions and supervises the operation of the ICA. Each contracting party to the ICA is a member of the organization (member). The organization functions through the International Coffee Council, the Executive Board, and the Executive Director and staff. The highest authority of the organization is the International Coffee Council which consists of all the members.

The United States joined the 1962, 1968, and 1976 International Coffee Agreements to help stabilize prices and export income of the developing producing countries. The United States also joined to help secure for consumers an adequate coffee supply at reasonable and stable prices.

The ICA, a treaty of the United States (28 UST 6401), was ratified by the Senate on August 23, 1976.

Among other things, the treaty requires member importing countries, including the United States, to take specific actions to limit imports of coffee under conditions of low price. The treaty was not self-executing and the President had no authority at that time to impose such limitations.

Export quotas are the economic instrument under the ICA used to maintain prices. These quotas are tightened—thus reducing the available world supply of coffee—as prices fall through a price band. At the lower end of the band, the most restrictive quota is in effect, and if prices exceed the upper end of the band, the quotas are removed.

When invoked, a world quota is divided among various producers, and basically is enforced by the member importing countries, which require that all imported coffee bear a coffee stamp indicating the country of origin. Statistical information on coffee shipments is forwarded to the organization in London, thus providing data on various nations' levels of export.

ENABLING LEGISLATION

Public Law 96–599, the "International Coffee Agreement Act of 1980" (the act), was approved on December 24, 1980, to implement the treaty and to carry out the obligations of the United States under the ICA. The act generally provides that the President may limit entry, and withdrawal from warehouse, of coffee exported from nonmembers, and prohibit entry of coffee exported from members when the coffee is not accompanied by appropriate documentation. In addition, the President may require that every export or reexport of coffee from the United States shall be accompanied by appropriate documentation. The President's authority is to be exercised in such a way as to protect American consumers against unwarranted price increases as a result of actions taken under the ICA, or by

two or more members. If there is coffee price manipulation by two or more members, the President shall request that the situation be remedied, either through relaxation of coffee export quotas or other actions. If the members involved in price-increasing market manipulation fail to remedy the situation within a reasonable time after a request for remedy, the President must suspend his authorities provided in the act to implement the treaty until effective market manipulation activities have ceased.

The act also requires reports on the operation of the ICA and on international trade in coffee.

The authority provided in the act will expire on September 30, 1982, so that the Congress will have an opportunity to review this matter in the near future.

Specifically, section 2 of the act provides that the President is authorized, in order to carry out and enforce the provisions of the ICA:

1. To regulate the entry of coffee for consumption, or withdrawal of coffee from warehouse for consumption, or any other form of entry or withdrawal of coffee such as for transportation or exportation, including, whenever quotas are in effect pursuant to the ICA, (i) the limitation of entry, or withdrawal from warehouse, of coffee imported from countries which are not members of the organization, and (ii) the prohibition of entry of any shipment from any member of the organization of coffee which is not accompanied either by a valid certificate of origin, a valid certificate of reexport, a valid certificate of reshipment, or a valid certificate of transit, issued by a qualified agency in such form as required under the ICA;
2. To require that every export or reexport of coffee from the United States shall be accompanied by a valid certificate of origin or a valid certificate of reexport, issued by a qualified agency of the United States designated by him, in such form as required under the ICA;
3. To require the keeping of such records, statistics and other information, and the rendering of such reports, relating to the importation, distribution, prices, and consumption of coffee as he may from time to time prescribe; and
4. To take such other action, and issue and enforce such rules and regulations, as he may consider necessary or appropriate in order to implement the obligations of the United States under the ICA.

DELEGATION OF AUTHORITY

As provided in section 4 of the act, the President may exercise any powers and duties conferred on him by the act through such agency or officer as he shall direct. Pursuant to Executive Order 12297 of March 12, 1981 (46 F.R. 16877), the President has delegated to the U.S. Trade Representative the functions vested in him by the act. The Executive order further provides that the U.S. Trade

Representative may redelegate some or all of those functions to the head of another executive agency.

By letters dated March 16, 1981, the U.S. Trade Representative has directed the Acting Commissioner of Customs to issue, and publish in the Federal Register, any necessary internal directives or operational procedures to implement the control provisions of the act.

DECISION UNDER ICA TO IMPOSE QUOTAS

Because of relevant price conditions, in a decision of the International Coffee Council (Council) concerning the entry into force of quotas, rendered in accordance with the provisions of paragraph (1) of article 33 of the ICA, import and export quotas became effective from October 1, 1980. The initial global annual quota, in accordance with the provisions of article 34 of the ICA, was set at 57.37 million bags (as defined in article 3 of the ICA). In that decision, it was stated that importing members shall implement on November 1, 1980, the Controls System of Certificates of Origin when member export quotas are in effect.

For U.S. Customs Service purposes, the effective date of implementation of the quotas and controls system established by the Council decision is (upon date of publication in the Federal Register).

DRAFTING INFORMATION

The principal authors of this document were Charles D. Ressin and Todd J. Schneider, Regulations and Information Division, Office of Regulations and Rulings, U.S. Customs Service. However, personnel from other Customs offices and the Treasury Department participated in its development.

CUSTOMS ACTIONS WHEN QUOTAS ARE IN EFFECT

Pursuant to section 4 of the act, the U.S. Customs Service will (1) limit the entry, or withdrawal from warehouse, of coffee imported from nonmembers, (2) prohibit entry of any shipment from any member which is not accompanied by valid documentation, and (3) require that every export or reexport of coffee from the United States shall be accompanied by valid documentation.

Dated: March 18, 1981.

WILLIAM T. ARCHEY,
Acting Commissioner of Customs.
JOHN P. SIMPSON,
Acting Assistant Secretary
(Enforcement and Operations).

[Published in the Federal Register March 24, 1981 (46 F.R. 18427)]

CUSTOMS GUIDELINES AND INSTRUCTIONS

To administer the quota system established by the ICA and implemented by Public Law 96–599, the Duty Assessment Division, Office of Trade Operations, U.S. Customs Service, has formulated and distributed to Customs field personnel operational guidelines and instructions, the text of which is reproduced below:

TELEX

To: All regional Commissioners, area, district and port Directors of Customs.

Subject: Special procedures for the importation and exportation of coffee.

Reference: International Coffee Agreement, 1976 Treaties and Other International Acts Series (8683: 28 UST 6401).

On December 24, 1980, the President signed Public Law 96–599, authorizing full implementation of the procedures specified under the International Coffee Agreement (ICA). Consequently, on March 24, 1981, Customs shall deny entry into the United States of any shipment of coffee which does not comply with the following instructions.

A. IMPORTS AND EXPORTS OF COFFEE FROM ICA MEMBER COUNTRIES

1. Effective March 24, 1981, Customs officers shall require a valid certificate of origin (form O), reexport (form R), reshipment (form RS), or transit (form T), to be furnished on entry, of all shipments of coffee classified under item Nos. 160.10, 160.20, and 160.21, Tariff Schedules of the United States (TSUS) which were exported from ICA member countries on or after November 1, 1980, except for those provided for in part F and shipments (a) proceeding through the United States on a through bill of lading; (b) entered for consumption in Puerto Rico; or (c) of green coffee from Hawaii shipped to the Continental United States. (A listing of ICA member countries is furnished as attachment I.)

2. Coffee exported from a member country prior to November 1, 1980, may be permitted entry if: (a) Box 16 of appropriate ICA form has been properly completed and is dated prior to November 1; or (b) the bill of lading is dated prior to November 1.

3. Samples of International Coffee Organization (ICO) forms O, R, and RS, along with instructions for completion, were recently sent to your ports. Please pass to proper Customs officers.

4. Forms O, R, RS, and T, are valid only if: (a) The certificate is marked "original" (duplicate or photostat copies are unacceptable); (b) no more than 9 months have elapsed since the end of the quarter

in which the certificate was issued; (c) the certificate covers only the coffee described at the time it was issued; and (d) the certificate has not previously been completed in part B.

5. In addition, forms O, R, and RS must bear the stamp of the Customs Service of the member from which the coffee described has been imported, reexported, or reshipped, respectively.

6. The proper number of either ICO export or transit stamps with the code corresponding to the country of issue printed on the right half (e.g., 16 for Mexico) must be affixed to the reverse side of form O or T respectively. (See attachment I for special instructions applicable to OAMCAF countries.)

7. Additionally, ICO export stamps used on form O must have the coffee year overprinted in a circle on the left half of the stamp, e.g., (1) for 1980–81 coffee year.

8. ICO export stamps each a different color in kilogram denominations from 25 kg up to 300,000 kg differ from transit stamps which are overprinted with letter T and range from 5 kg to 30,000 kg. They cannot be attached to a separate sheet. The net weight of the green coffee or green coffee equivalent governs the amount of stamps required. Example, a consignment of 399 kg requires export stamps to the value of 375 kg or 395 kg transit stamps, as appropriate. To find green equivalents apply the following conversion factors:

Dried coffee cherry—Multiply net weight of dried coffee cherry by 0.50.

Parchment coffee—Multiply net weight of parchment coffee by 0.80.

Roasted coffee—Multiply the net weight of the roasted coffee by 1.19.

Soluble coffee—Multiply the net weight of the soluble or dried coffee solids contained in the soluble coffee by 3.00.

Decaffeinated coffee—Multiply the net weight of the decaffeinated coffee in green, roasted or soluble form by 1.00, 1.19, or 3.00 respectively.

9. Importation of coffee is permitted if the number of the bags is equal to or less than number shown on the certificate provided the difference in net weight does not exceed 1 percent more than the net weight noted in the certificate. Example: Certificate lists 20 bags at a net weight of 1,200 kilograms and the Customs officer finds 19 bags at a net weight of 1,210 kilograms. Consequently, the coffee is permitted entry because the number of bags is less and the net weight does not exceed 1 percent more than the net weight on the certificate.

10. Customs officers shall note in box 18 part B of the respective certificates any differences between the certificate description of

the coffee as to quantity, weight, marks, and numbers and the actual shipment. If the information on the respective certificate concerning the country of destination is missing or is not accurate, the Customs officer shall insert the correct information in the relevant box in part A of the certificate before signing, dating, and applying the Customs stamp.

11. Valid certificates, completed in accordance with the foregoing instructions, shall be forwarded by Customs to the ICO within 30 days of the month of collection in securely packed batches of not more than 100.

B. COFFEE AFLOAT AND REEXPORTS

1. If the holder of a valid certificate, form O, R, RS, or T, covering a parcel of coffee afloat wishes to split the shipment, the holder may, on surrendering the certificate to a Customs officer, request the issue of form R.

(a) The Customs officer should indicate in box 18 of form O, R, RS, or T (as appropriate), the exact quantity of coffee being entered at that port.

(b) Enter in box 15 of the form R being issued the following words: "Shipment of coffee split while afloat. This certificate is in partial replacement of form (O, T, R, or RS, as appropriate), reference No. —— covering a parcel of —— kg/lb."

(c) The original of the form R is issued to the applicant.

(d) The first copy of the form R should be attached to the relevant original form O, R, RS, or T and both forwarded to the ICO.

2. The form R is also issued by U.S. Customs for coffee reexported after having been imported into the United States.

IMPORTS OF COFFEE FROM NONMEMBER COUNTRIES

1. During the period March 24, 1981, and through September 30, 1981, not more than 7,936,260 pounds of coffee classifiable under items 160.10, 160.20, and 160.21 from countries other than member countries may be entered or withdrawn from warehouse for consumption.

2. Coffee from nonmember countries shall be reported and released via the quota CRT. Reports shall indicate the actual quantity (in pounds, not converted) of coffee by TSUSA number. For items 160.1040, 160.2000, and 160.2100, the kind (roasted, soluble, dries, parchment, or liquid) shall be reflected in the remarks data field by using the first four letters, i.e., SOLU. If the country of exportation differs from the country of growth, the country of exportation shall also be stated in the remarks/data field. Coffee exported from a nonmember country will be considered the growth of that country unless proof is submitted that it is the growth of another country.

338-816 0 - 81 - 2

3. Additionally, all importations of coffee from nonmember countries will continue to be reported to the ICO on ICO import return form I, which shall be completed in accordance with the instructions on the reverse side thereof. Importers or agents may reproduce additional copies of this form for their own use if so desired.

D. HAWAIIAN COFFEE

1. For the exportation of coffee grown in Hawaii to member countries a Customs officer shall sign, date, and stamp with a Customs stamp boxes 16 and 17 on the original and both copies of the ICO certificate of origin form O, and verify that ICO export stamps equal to the net weight of the coffee are affixed to the reverse side of the original certificate. The Customs officer shall then cancel the ICO stamps without obliterating them, fill in the reference number of the certificate, consisting of the U.S. country code No. 69, the port code number, the consecutive number of the certificate (a new series of which shall begin on October 1 of each year), and the expiration date (9 months from the end of the quarter in which the certificate is issued). The original certificate shall be returned to the exporter; one copy (green) shall be sent to the ICO; and the remaining copy shall be retained in Customs files for 4 years.

2. In the case of exports of Hawaiian coffee to nonmember countries, the above procedure shall apply, except: (a) Coffee export stamps shall not be affixed to the original certificate of origin form X; (b) the original and copies of the certificate shall be marked in bold print "shipment to nonmembers"; (c) the original shall not be returned to the exporter but shall be sent along with one copy (green)to the ICO.

3. Exporters of coffee grown in Hawaii can obtain ICO export stamps and ICO certificate of origin from the State Board of Agriculture. Correspondence in this regard should be addressed to: Chairman, Board of Agriculture, State of Hawaii, P.O. Box 22159, Honolulu, Hawaii 96822.

E. MISSING, INVALID, OR OTHERWISE UNACCEPTABLE DOCUMENTS

1. Upon entry, a bond on Customs form 7551, 7553, or 7595, equal to 10 percent of the value of the coffee but not exceeding $250,000, shall be posted for production of any missing ICO documentation. The bond liability assumed is in addition to any other bond liability required as a condition for entry of the commodity. If valid documentation is not produced within 60 days of the date of entry, liquidated damages in the full amount of the bond, in the case of a single entry

bond, or the amount determined necessary to accept entry, in the case of a term-entry bond, shall be assessed, except that, upon written application to the District Director of Customs concerned, the period for producing the missing documentation may be extended for an additional 30 days. In the event of noncompliance, the procedures in part 172, C.R., relating to liquidated damages, shall apply.

2. If the period of validity (9 months after end of the quarter of issuance) has lapsed prior to the surrender of forms O, R, RS, or T to Customs, the holder shall forward the certificate directly to the Executive Director of the ICO, with an application for the extension of the form's period of validity. In his application, the holder shall state the reasons for the failure to use or exchange the certificate before its expiration and shall specify the present location of the coffee. If the coffee is held in a warehouse, the holder shall provide a written declaration by the manager of the warehouse identifying the coffee and confirming the period of storage.

3. Application for replacement of lost certificates should also be made by the holder directly to the Executive Director of the ICO.

F. EXEMPTIONS

1. The foregoing provisions do not apply to the importation of samples and parcels up to a maximum net weight of 60 KG of green coffee or the equivalent thereof namely: (a) 120 KG of dried coffee cherry; or (b) 75 KG of parchment coffee; or (c) 50.4 KG of roasted coffee; or (d) 20 KG of soluble or liquid coffee.

G. GENERAL GUIDANCE

(1) The address of the ICO is 22 Berners St., London WIP 4DD, England.

(2) A coffee year runs from October 1 to September 30.

(3) For further information relative to these instructions, please call coffee program manager at (FTS) 566–2957.

H. SUPERSEDED MATERIAL

Effective March 24, 1981, the following circulars and instructions are superseded: SPE–2–O:D:S dated September 21, 1976; manual supplement No. 36B–01 dated January 25, 1979; and CIE 51/80 dated November 24, 1980.

RICHARD R. ROSETTIE,
Acting Director,
Duty Assessment Division.

ATTACHMENT 1.—LIST MEMBERS AND THEIR CODE NUMBERS

Exporting Members

Angola	158	*Ivory Coast*	24
Benin	22	Jamaica	100
Bolivia	1	Kenya	37
Brazil	2	Liberia	107
Burundi	27	*Madagascar*	25
Cameroon	19	Malawi	109
Central African Republic	20	Mexico	16
Colombia	3	Nicaragua	17
Congo	21	Panama	29
Costa Rica	5	Papua New Guinea	166
Dominican Republic	7	Paraguay	122
Ecuador	8	Peru	30
El Salvador	9	Philippines	
Ethiopia	10	Rwanda	23
Gabon	23	Sierra Leone	32
Ghana	38	Tanzania	33
Guatemala	11	*Togo*	26
Guinea	92	Trinidad and Tobago	34
Haiti	12	Uganda	35
Honduras	13	Venezuela	36
India	14	Zimbabwe	39
Indonesia	15		

Importing Members

Australia	51	Israel	99
Austria	52	Italy	59
Belgium/Luxembourg	53	Japan	60
Canada	54	Netherlands	61
Cyprus	86	New Zealand [3]	70
Denmark [1]	56	Norway	62
Federal Republic of Germany	57	Portugal [4]	31
Finland	71	Spain	63
France [2]	53	Sweden	64
Hong Kong	93	Switzerland	65
Hungary	94	United Kingdom	68
Ireland	98	United States of America	69
		Yugoslavia	148

[1] Includes Greenland.
[2] Includes French West Indies.
[3] Includes Niue.
[4] Includes Azores.

NOTE.—Members of the Organization African Malagasy Coffee Producers (OAMCAF) are underlined. Coffee export stamps issued to members of OAMCAF will bear the code No. 155.

(T.D. 81-59)

Notice Concerning the Deep Seabed Hard Mineral Resources Act

Notice of restrictions under the Deep Seabed Hard Mineral Resources Act against certain uses of vessels not documented as vessels of the United States in deep seabed mining

The Deep Seabed Hard Mineral Resources Act (Public Law 96-283, 94 Stat. 553, the act) became law on June 28, 1980. The primary purpose of the act is to establish an interim procedure for the orderly development of hard mineral resources in the deep seabed, pending adoption of an international regime. However, the act also reserves to vessels documented under the laws of the United States the commercial recovery or processing at sea of deep seabed hard mineral resources and a part of the transportation of those resources. This notice is published to advise Customs officers of these provisions of the act.

The act establishes a license or permit system. Only with a license or permit issued under the act (or with a license issued by a reciprocating state or pursuant to an international agreement in force with respect to the United States) may a U.S. citizen engage in exploration for, or commercial recovery of, deep seabed hard mineral resources. "Deep seabed" is defined as the seabed and subsoil thereof to a depth of 10 meters lying seaward of and outside (1) the continental shelf of any nation; and (2) any area of national resource jurisdiction of any foreign nation, if such area extends beyond the continental shelf of any nation and such jurisdiction is recognized by the United States.

"Hard mineral resource" is defined as any deposit or accretion on, or just below, the surface of the deep seabed of nodules which include one or more minerals, at least one of which contains manganese, nickel, cobalt, or copper.

Section 102(c)(2) of the act provides that:

> No permittee may use any vessel for the commerical recovery of hard mineral resources or for the processing at sea of hard mineral resources recovered under the permit issued to the permittee unless the vessel is documented under the laws of the United States.

Section 102(c)(3) of the act provides that:

> Each permittee shall use at least one vessel documented under the laws of the United States for the transportation from each mining site of hard mineral resources recovered under the permit issued to the permittee.

The agencies primarily responsible for the enforcement of the act are the National Oceanic and Atmospheric Administration and the

department in which the Coast Guard is operating. These agencies are required by the act to issue proposed and final regulations implementing the act. In the meantime, however, Customs officers should be aware of the restrictions on the use of vessels not documented as vessels of the United States by U.S. citizens in the commercial recovery, processing at sea, and transportation of deep seabed hard mineral resources. Suspected violations of these restrictions should be reported to the Carrier Rulings Branch, Headquarters, U.S. Customs Service.

Dated: March 20, 1981.

MARILYN G. MORRISON,
Director,
Carriers, Drawback and Bonds Division.

(T.D. 81-60)

Instruments of International Traffic

T.D. 75-212 amended to designate as instruments of international traffic certain steel cores and fabric separators used together to hold rayon or nylon fabric or ply

T.D. 75-212, among other things, designated as "instruments of international traffic", within the meaning of section 322(a), Tariff Act of 1930, as amended, "steel cores designed to hold rayon or nylon fabric or ply, measuring 65 inches in length and 42½ inches in circumference."

It has been established to the satisfaction of the U.S. Customs Service that the steel cores designated as instruments of international traffic in T.D. 75-212 are incapable of transporting rayon or nylon fabric or ply without damage unless used together with fabric separators which separate the rayon or nylon fabric or ply as it is wound on the core. It also has been established to the satisfaction of the Customs Service that the fabric separators, consisting of thin woven synthetic fabric, are substantial, suitable for and capable of repeated use, and used in significant numbers in international traffic.

Under the authority of section 10.41a(a)(1), Customs Regulations, I hereby amend T.D. 75-212 to provide that the steel cores described in that Treasury decision and the above-described fabric separators, when used together as an entity to transport rayon or nylon fabric or ply to be used in tire manufacture, are designated as "instruments of international traffic" within the meaning of section 322(a), Tariff Act of 1930, as amended (19 U.S.C. 1322(a)),

and may be released under the procedures provided for in section 10.41a, Customs Regulations. (104356)

(BOR-7-07)

Dated: **March 24,** 1981.

MARILYN G. MORRISON,
Director,
Carriers, Drawback and Bonds Division.

[Published in the the Federal Register March 30, 1981 (46 FR 19381)]

(T.D. 81-61)

Foreign Currencies—Variances From Quarterly Rate

The following rates of exchange are based upon rates certified to the Secretary of the Treasury by the Federal Reserve Bank of New York, pursuant to section 522(C), Tariff Act of 1930, as amended (31 U.S.C. 372(c)), and reflect variances of 5 per centum or more from the quarterly rate published in T.D. 81-13 for the following countries. Therefore, as to entries covering merchandise exported on the dates listed, whenever it is necessary for Customs purposes to convert such currency into currency of the United States, conversion shall be at the following rates:

Austria schilling:	
March 9, 1981	$0.066269
March 10, 1981	.066912
March 11, 1981	.066800
March 12-13, 1981	.066890
Belgium franc:	
March 9, 1981	$0.028818
March 10, 1981	.028986
March 11, 1981	.028744
March 12, 1981	.028852
March 13, 1981	.028885
Denmark krone:	
March 9, 1981	$0.150150
March 10, 1981	.151114
March 11, 1981	.151057
March 12, 1981	.150376
March 13, 1981	.150546
Finland markka:	
March 9, 1981	$0.244379
March 10, 1981	.245640
March 11, 1981	.246184
March 12, 1981	.245700
March 13, 1981	.246305

France franc:	
March 9, 1981	$0.200642
March 10, 1981	.201329
March 11, 1981	.200280
March 12, 1981	.200642
March 13, 1981	.200884
Germany deutsche mark:	
March 9, 1981	$0.474271
March 10, 1981	.474496
March 11, 1981	.472590
March 12, 1981	.473261
March 13, 1981	.474046
Ireland pound:	
March 9, 1981	$1.7250
March 10, 1981	1.7360
March 11, 1981	1.7200
March 12, 1981	1.7230
March 13, 1981	1.7280
Italy lira:	
March 9, 1981	$0.000973
March 10, 1981	.000978
March 11, 1981	.000974
March 12–13, 1981	.000976
Netherlands guilder:	
March 9, 1981	$0.427807
March 10, 1981	.429000
March 11, 1981	.427077
March 12, 1981	.427442
March 13, 1981	.428266
Portugal escudo:	
March 9, 1981	$0.017513
March 10, 1981	.017590
March 11–13, 1981	.017621
Republic of South Africa rand:	
March 11, 1981	$1.2670
March 12, 1981	1.2665
March 13, 1981	1.2640
Spain peseta:	
March 9, 1981	$0.011507
March 10, 1981	.011614
March 11, 1981	.011602
March 12, 1981	.011605
March 13, 1981	.011635
Sri Lanka rupee:	
March 9–12, 1981	$0.055991
March 13, 1981	.055249

Sweden krone:	
March 9, 1981	$0.215169
March 10, 1981	Quarterly
March 11, 1981	.214592
March 12–13, 1981	Quarterly
Switzerland franc:	
March 9, 1981	$0.518403
March 10, 1981	.520021
March 11–12, 1981	.516262
March 13, 1981	.518941
United Kingdom pound:	
March 9, 1981	$2.2150
March 10, 1981	2.2280
March 11, 1981	2.2165
March 12, 1981	2.2190
March 13, 1981	2.2170

(LIQ–03–01 O:C:E)

Dated: March 13, 1981.

GWENN KLEIN KIRSCHNER,
Acting Chief,
Customs Information Exchange.

(T.D. 81–62)

Foreign Currencies—Daily Rates for Countries Not on Quarterly List

Rates of exchange based on rates certified to the Secretary of the Treasury by the Federal Reserve Bank of New York for the Brazil cruzeiro, People's Republic of China yuan, Hong Kong dollar, Iran rial, Philippines peso, Singapore dollar, Thailand baht (tical), and Venezuela bolivar

The Federal Reserve Bank of New York, pursuant to section 522(c), Tariff Act of 1930, as amended (31 U.S.C. 372 (c)), has certified buying rates for the dates and foreign currencies shown below. The rates of exchange, based on these buying rates, are published for the information and use of Customs officers and others concerned pursuant to part 159, subpart C, Customs Regulations (19 CFR 159, subpart C).

Brazil cruzeiro:	
March 9–10, 1981	$0.0139
March 11–13, 1981	.0136
People's Republic of China yuan:	
March 9, 1981	$0.607681
March 10–13, 1981	.609496

338-816 O - 81 - 3

Hong Kong dollar:	
March 9, 1981	$0. 187196
March 10, 1981	. 187952
March 11, 1981	. 188750
March 12, 1981	. 188377
March 13, 1981	. 188964
Iran rial:	
March 9–13, 1981	Not available
Philippines peso:	
March 9–12, 1981	$0. 1305
March 13, 1981	. 130548
Singapore dollar:	
March 9, 1981	$0. 475285
March 10, 1981	. 475851
March 11, 1981	. 476190
March 12, 1981	. 473597
March 13, 1981	. 474834
Thailand baht (tical):	
March 9–13, 1981	$0. 0488
Venezuela bolivar:	
March 9–13, 1981	$0. 2329

(LIQ–03–01 O:C:E)
Dated: March 13, 1981.

GWENN KLEIN KIRSCHNER,
Acting Chief,
Customs Information Exchange.

Recent Unpublished Customs Service Decisions

The following listing of recent administrative decisions issued by the Office of Regulations and Rulings, U.S. Customs Service, and not otherwise published, is published for the information of Customs officers and the importing community. Although the decisions are not of sufficient general interest to warrant publication as Treasury decisions, the listing describes the issues involved and is intended to aid Customs officers and concerned members of the public in identifying matters of interest which recently have been considered by the Office of Regulations and Rulings.

A copy of any decision included in this listing, identified by its date and file number, may be obtained in a form appropriate for public distribution upon written request to the Office of Regulations and Rulings, attention: Legal Reference Area, room 2404, U.S. Customs Service, 1301 Constitution Avenue NW., Washington, D.C. 20229. These copies will be made available at a cost to the requester of 10 cents per page. However, the Customs Service will waive this charge if the total number of pages copied is 10 or less.

Decisions listed in earlier issues of the Customs Bulletin, through December 8, 1980, are available in microfiche format at a cost of $27.15 (15 cents per sheet of fiche). It is anticipated that additions to the microfiche will be made quarterly and subscriptions are available. Requests for the microfiche now available and for subscriptions should be directed to the Legal Reference Area. Subscribers will automatically receive updates as they are issued and will be billed accordingly.

Dated: March 19, 1981.

B. JAMES FRITZ,
Director,
Regulations and Information Division.

Date of decision	File No.	Issue
2-10-81	715015	Country-of-origin marking: Acrylic knit gloves
2-11-81	715597	Entry: Aircraft supplies of a foreign government imported for use on its aircraft

Date of decision	File No.	Issue
2- 9-81	800023	Classification: Metal portable dock walkways (653.00. 653.01)
2- 5-81	800039	Classification: Brass beds (727.52)
12-30-80	055862	Valuation: Exported parts of shoe uppers described as vamps
12-23-80	055869	Classification: Paper lithographs laminated to glass (548.05)
12-11-80	055920	Whether greensalted calfskins exported to Canada for processing are entitled to item 806.20 relief upon return
10-10-80	060853	Classification: Seaweed (192.05)
2-12-81	061775	American selling price: Basis of valuation to women's sandals (700.60)
12-11-80	061878	Classification: Pocket corder (remote beeper) (688.40)
2-12-81	061945	American selling price: Basis of valuation to ladies, sandals (700.60)
2-18-81	063889	Classification: Ceiling fan with optional light fixture (678.50,661.06)
11- 4-80	063924	Whether the cost incurred in grading and testing cores that are exported and either returned to the United States or retained for assembly are free of duty as part of the exported cores
2-10-81	063981	Classification: Digital planimeter (710-61, 710.60)
10- 8-80	064888	Classification: Miniature table screens and embroidered mats (766.25, 365.91, 207.00, 514.81, 389.30)
9-18-80	064933	Classification: Fiberglass reinforced plywood panels (240.25)
1-29-81	064980	Classification: Rolled and bevelled steel product (609.80)
2-10-81	065161	Classification: Leather upper portions to be assembled into men's moccasin-style loafers after importation (791.28)
11- 4-80	065252	Classification: Foreign electrolytic process of oxidizing the surface of exported aluminum foil (807.00)
1-15-81	065308	Classification: Toenail clipper (650.91)
2-17-81	065519	Classification: Sun visor radio cap combination (688.45)
12-17-80	065528	Classification: Spring hooking tool (651.47)
1- 6-81	065558	Classification: Men's trousers (382.00, 382.33)
1-29-81	065560	Classification: Embroidered ladies, cotton tunics (382.00)
12-19-80	065573	Classification: "Kingpin" described as a part of the fifth wheel assembly of a tractor trailer unit (692.32)
12-19-80	065622	Classification: FM-40 automatic firewood machine (647.42)
2-18-81	065643	Classification: Figurines used as cake ornaments (773.10)
1-29-81	065646	Classification: Jeans with rear pockets that have been pieced together (382.00)
12-19-80	065661	Classification: Block/log splitter (674.42)
2-13-81	065679	Classification: Saltwater taffy packed in scalloped shells (157.10, 190.65)

Date of decision	File No.	Issue
2–10–81	065733	Classification: Elephant basket, mouse laundry basket, small peacock chair of rattan, wicker, willow, and bamboo (222.44, 222.40, 222.41, 222.42, 727.11)
2–20–81	065759	Classification: Gloves in chief value of goatskin (705.42)
2–19–81	065804	Classification: Hampers and waste baskets (727.55, 654.02, 654.01. 654.14, 654.11)
1–29–81	065819	Classification: Hang gliders capable of launch and recovery by foot power (694.21)
1–30–81	065820	Classification: Hang gliders capable of launch and recovery by foot power (694.21)
2–13–81	065846	Classification: Metal pot ring (654.01)
2–20–81	066104	Classification: Cut orchids, packing materials, and a packaging machine (192.21, 774.55, 274.80, 662.20)
1– 6–81	066250	Classification: Computer data cartridge drive, a laser interferometer, a cutting and polishing machine, and a splicing machine (676.52, 712.05)
1–29–81	066274	Classification: Woven polyethylene liner (389.62)
12–18–80	066443	Classification: Sprayer monitor (agricultural sprayer) and tractor monitor used to measure ground speed, distance, etc. (711.78, 710.80, 870.40)
2–19–81	066476	Classification: Butane lighters (756.04, 756.06, 756.10)
2–10–81	066537	Classification: Leather upper portions to be assembled into men's moccasin-style loafers after importation (791.28)
1–30–81	066597	Classification: Glass marble (737.95)
2– 5–81	066582	Classification: Acrylic headwear (703.05)
2–19–81	066652	American selling price basis of valuation to certain men's protective boots (rubber boots with nylon overlay)
2–17–81	066662	American selling price basis of valuation to women's canvas basketball shoes
2–19–81	066710	American selling price basis of valuation to certain nylon/leather vulcanized jogging shoes for youths
2– 5–81	066817	Classification: Flea collar (774.55)
1– 1–81	066975	Classification: Cotton garden glove with pvc palm (704.40)
2–20–81	066984	Classification: Wrap knit hat (702.06, 703.10, 703.15, 703.05, 702.47)

The following listing of recent administrative decisions issued by the Office of Regulations and Rulings, U.S. Customs Service, and not otherwise published, is published for the information of Customs officers and the importing community. Although the decisions are not of sufficient general interest to warrant publication as Treasury Decisions, the listing describes the issues involved and is intended to aid Customs officers and concerned members of the public in identifying matters of interest which recently have been considered by the Office of Regulations and Rulings.

A copy of any decision included in this listing, identified by its date and file number, may be obtained in a form appropriate for public distribution upon written request to the Office of Regulations and Rulings, attention: Legal Reference Area, room 2404, U.S. Customs Service, 1301 Constitution Avenue NW., Washington, D.C. 20229. These copies will be made available at a cost to the requester of 10 cents per page. However, the Customs Service will waive this charge if the total number of pages copied is 10 or less.

Decisions listed in earlier issues of the CUSTOMS BULLETIN, through December 8, 1980, are available in microfiche format at a cost of $27.15 (15 cents per sheet of fiche). It is anticipated that additions to the microfiche will be made quarterly and subscriptions are available. Requests for the microfiche now available and for subscriptions should be directed to the Legal Reference Area. Subscribers will automatically receive updates as they are issued and will be billed accordingly.

Dated: March 25, 1981.

B. JAMES FRITZ,
Director,
Regulations and Information Division.

Date of decision	File No.	Issue
3- 9-81	104850	Vessels: Relief from payment of vessel repair duties
3- 5-81	104918	Vessels: Statutory requirements for vessels recovering and/or transporting recovered spilled oil
3-11-81	104996	Vessels: Relief from duty under 19 U.S.C. 1466 on the cost of vessel repairs
3-10-81	105000	Vessels: Fee collection for diversion of vessel from one U.S. port to another U.S. port
3- 2-81	105012	Vessels: Remission of duties assessed on the cost of foreign repairs to American vessels: CR4.14(k)
3- 5-81	105029	Vessels: Towing or pushing barges between their tows and a dock is towing: 46 U.S.C. 316(a)
1-29-81	800003	Classification: Pinball game, maze puzzle game, auto race track (734.20, 735.20, 737.95)
1-27-81	800006	Classification: Para diisopropyl benzene (402.36)
2-12-81	800009	Classification: Cotton military style safari jacket (382.00)
2- 9-81	800012	Classification: Laminated textile fabrics (359.50)
1-27-81	800014	Classification: Leather label not ornamentation
2- 4-81	800017	Classification: Plastic film (771.43, 774.55)
2-13-81	800021	Classification: Adapters used to connect automotive mufflers, exhaust and tail pipes (610.32, 610.49, 610.80)
2- 5-81	800029	Classification: Aluminum metalized polyester strips (309.20, 309.21)

Date of decision	File No.	Issue
1-27-81	800032	Classification: Fluid, frozen, and powdered soy milk (166.40, 183.05)
2-18-81	800036	Classification: Form sets (680.13)
2- 2-81	800038	Classification: Toy model vehicles (737.15)
2- 4-81	800041	Classification: Calculators (676.20)
2-13-81	800042	Classification: Music boxes (725.50)
2-10-81	800047	Classification: Bath and toilet articles, tooth brush set (750.40, 772.15)
2- 9-81	800050	Classification: Toy television and music box (737.80)
2-10-81	800051	Classification: Handmade papers and social greeting cards (253.05, 253.10, 274.05)
2- 9-81	800053	Classification: Moon boots (700.56, 700.58)
2-26-81	800061	Classification: Kerosene space heaters (653.52)
2-18-81	800065	Classification: Nonexpanded synthetic rubber in profile shape (771.55)
2-12-81	800066	Classification: Plastic figurine (773.10)
2-12-81	800068	Classification: Flotation jacket (772.30, 774.60)
2-12-81	800075	Classification: Polyethylene packing or shipping bags (385.53)
2-26-81	800080	Classification: Toddler nylon taffeta mittens (735.06)
2-26-81	800086	Classification: Quilted textile mittens (704.90)
2-13-81	800087	Classification: Leather strap with hook and ring (745.62, 745.68)
2-26-81	800089	Classification: Dye T (410.22)
3- 4-81	800107	Classification: Quick connect metal couplings (680.17)
2-26-81	800111	Classification: Polypropylene and polyethylene woven fabrics (338.30)
3- 2-81	800117	Classification: Bowling shoes (700.58)
2-26-81	800124	Classification: Frozen pastries (182.20, 183.01)
2-26-81	800126	Classification: Polyester/cotton twill pants (382.81)
2-26-81	800134	Classification: Unprocessed loofah (193.25)
2-26-81	800135	Classification: Book binding cloth (359.50)
2-26-81	800139	Classification: Methyl-tertiary-butyl ether: MTBE (428.96)
3- 4-81	800147	Classification: Expanded PVC used in flotation jackets (770.80)
3- 2-81	800152	Classification: Ladies coat (382.81)
2-26-81	800169	Classification: Flavored soybean powder (183.05)
3- 4-81	064596	Classification: Doll on roller skates (737.22)
3- 6-81	064681 064645	Classification: Fishing pole (731.70)
1-29-81	064921	Classification: Shaft assemblies and pipe fittings (666.00, 610.80)
1-30-81	065155	Classification: Components of oil well drilling masts (652.98, 680.50)
2-12-81	065242	Classification: American selling price: men's footwear (700.60)
2-13-81	065439	Classification: Wall panel of wood veneer
2- 4-81	065467	Classification: Electric valve activators (678.50)
1-30-81	065499	Classification: Optical reader automatic coding system (676.30)

Date of decision	File No.	Issue
2- 4-81	065504	Classification: Cork pick, nut pick, and pumpkin pick (748.20, 748.21, 774.45)
1-29-81	065536	Classification: Glider (694.21)
2-12-81	065537	Classification: Ladle heater (678.50)
1-30-81	065652	Classification: American selling price: children's footwear (700.60)
1-30-81	065717	Classification: Feed grinding or regulating wheels for centerless grinders (674.53)
2-13-81	065723	Classification: Tire molding press, bladder system, matirices, steam chambers, and bead plates (678.35 678.50, 680.12)
2-26-81	065737	Classification: Decal paper (273.75)
1-30-81	065754	Classification: Embroidered manufacturer's name not ornamentation (380.27)
2-10-81	065810	Classification: Freezing mold bag (772.15)
1-29-81	065873	Classification: Textile machinery (670.00)
2-12-81	065926	Classification: Fifth wheel assemblies (692.32)
3- 4-81	065934	Classification: Orthopedic raw materials (771.43, 771.45)
2-10-81	066159	Classification: Driving and surfing boots; sheets of neoprene nylon (700.53, 700.60, 355.81)
2- 4-81	066810	Classification: Carcass stiffener (688.45)
1-30-81	066251	Classification: Marine control equipment and valves used in pneumatic systems (680.27, 680.19, 685.70)
3- 4-81	066259	Classification: Extruded plastic mesh (870.40)
2-14-81	066400	Classification: Tracked vehicle (692.34)
2-14-81	066432	Classification: Data analyzer (676.15)
2- 5-81	066496	Classification: Farm wagon, wagon parts, hydraulic dumper (666.00)
2-27-81	066651	Classification: Leather tubular uppers (791.26, 791.28)
2-12-81	066728	Classification: Security shotgun mounts (657.25)
1-30-81	066886	Classification: Rubber coated pins for gas regulators (646.60)
1-30-81	066911	Classification: Ladies' plastic sandals: American selling price (700.60)
1-30-81	066915	Classification: Rubber bottom (774.50)
2- 2-81	066952	Classification: Leather fob (740.38)
2-12-81	068028	Classification: Inking pad (774.55)
3- 5-81	068103	Classification: Conditions to be met to constitute suspension of protest when the request for suspension is based on a test case pending before the Customs court

Decisions of the United States Court of Customs and Patent Appeals

(Appeal No. 80–19)

KRUPP INTERNATIONAL INC. AND FRIED. KRUPP GMBH, APPELLANTS *v.* U.S. INTERNATIONAL TRADE COMMISSION, APPELLEE AND SOUTHWIRE COMPANY, APPELLEE

(—— F. 2d ——)

1. MOTION TO INTERVENE IN APPEAL FROM ITC DETERMINATION.

Western Electric Co. and Nassau Recycle Corp. (collectively, Bell) move for leave to intervene in Appeal No. 80–19. The motion is untimely and denied.

2. ID.—CCPA RULES—FEDERAL RULES OF APPELLATE PROCEDURE.

CCPA Rules do not specifically provide for intervention in appeals from final determinations of the ITC; thus, in accordance with CCPA Rule 1.4(a), the Federal Rules of Appellate Procedure (FRAP) govern such practice.

3. ID.

FRAP 15(d) procedure is applicable to motions for leave to intervene in the CCPA review of ITC final determinations.

4. ID.—TIMELINESS.

Bell's Motion for Leave to Intervene was not filed within the time provided in FRAP 15(d).

5. ID.—WAIVER OF RULES.

The CCPA may waive or modify its own rules or applicable FRAP rules on motion and for "good cause" under CCPA Rule 1.4(c); however, where the request for waiver or modification concerns an extension of time, consideration of the request must be made in light of CCPA Rule 5.2(d). Rule 5.2(d) permits an untimely action to be taken where a motion has been filed after the expiration of a controlling specified time period only "where the failure to act was excusable."

6. Id.—Good Cause.

"Good cause" has not been established to waive the FRAP 15(d) 30-day time period. Additionally, Bell's failure to act in a timely manner is not excusable.

U.S. Court of Customs and Patent Appeals, March 19, 1981

Appeal from International Trade Commission

I.T.C. Investigation No. 337-TA-52

[Motion denied]

Harvey Kaye, George H. Spencer, Sheldon I. Landsman, Deborah S. Strauss, Paul Plaia, Jr., and *Peter Stahlman*, counsel for appellants.

Jeff Neeley, counsel for I.T.C.

Victor M. Wigman, Herbert Cohen, George C. Myers, Jr., Van C. Wilks, Herbert M. Hanegan, Stanley L. Tate, James H. Bratton, Jr., Thomas W. Rhodes, and *Frederick G. Boynton*, counsel for Southwire.

Before Markey, *Chief Judge*, Baldwin, Miller, and Nies, *Associate Judges*.

Baldwin, Judge.

[1] Krupp International, Inc. and Fried. Krupp GmbH (collectively, Krupp) appealed (Appeal No. 80-19) from a decision of the U.S. International Trade Commission (ITC) in Investigation No. 337-TA-52, In re Certain Apparatus for the Continuous Production of Copper Rod, 206 USPQ 138 (1979). Southwire Co. (Southwire) has cross-appealed (Appeal No. 80-21). Western Electric Co., Inc., and Nassau Recycle Corp. (collectively, Bell) move for leave to intervene in Appeal No. 80-19. We deny the motion.

BACKGROUND

On April 11, 1978, Southwire filed a complaint with the ITC under section 337 [1] of the Tariff Act of 1930, as amended, 19 U.S.C. 1337 (sec. 337), alleging that Krupp and Bell had engaged in unfair acts or unfair methods of competition by importing into and selling in this country certain apparatus used for the continuous production of copper rod. Krupp and Bell allegedly infringed 5 U.S. patents and misappropriated 14 trade secrets owned by Southwire.

Following an investigation, the ITC issued a Commission Memorandum Opinion and a Commission Determination and Order on November 23, 1979, 206 USPQ 138. The opinion treated the 5 patents and 14 trade secrets and the issues thereon seriatim. The ITC found

---

[1] Sec. 337 provides in pertinent part:

Unfair Practices in Import Trade

Unfair methods of competition declared unlawful

(a) Unfair methods of competition and unfair acts in the importation of articles into the United States, or in their sale by the owner, importer, consignee, or agent of either, the effect or tendency of which is to destroy or substantially injure an industry, efficiently and economically operated, in the United States, or to prevent the establishment of such an industry, or to restrain or monopolize trade and commerce in the United States, are declared unlawful, and when found by the Commission to exist shall be dealt with, in addition to any other provisions of law, as provided in this section.

Bell not guilty of any violation. However, it determined that Krupp violated section 337 with respect to one patent and two trade secrets and ordered Krupp to cease and desist from importing or selling articles incorporating the two trade secrets or articles suitable for use in infringing the patent. Of the remaining four patents, the ITC found three invalid and one valid but not infringed. Of the remaining 12 trade secrets, the ITC found 9 not protectable because they had been publicly disclosed, 2 not misappropriated, and Southwire lacking a proprietary interest in the other.[2]

On February 19, 1980, Krupp appealed (Appeal No. 80–19) from the ITC decision, alleging error in the determinations that Krupp violated section 337. On February 28, 1980, Southwire filed a cross-appeal (Appeal No. 80–21) attacking the ITC's findings respecting the patents and trade secrets for which no section 337 violation was found.[3]

Additionally, two appeals by Bell (Nos. 80–14 and 80–26) were filed and, on Southwire's motions, dismissed by this court. Similarly, two additional appeals by Krupp (Nos. 80–15 and 80–23) were filed and, on Southwire's motions, dismissed.[4]

To complete the appellate track record, two more appeals in this matter (Nos. 79–25 and 79–31) filed by Southwire have been decided on the merits by this court, *Southwire Co.* v. *USITC*, 67 CCPA——, 629 F. 2d 1332, 207 USPQ 189 (1980); and one Southwire appeal (No. 80–30) was dismissed on Southwire's motion. *Southwire Co.* v. *USITC*, No. 80–30, September 11, 1980.

Concerning Appeal Nos. 80–19 and 80–21, the parties stipulated on March 21, 1980, that they would prepare and file a consolidated printed transcript of record by June 16, 1980. On December 3, 1980, after various other extensions of time, this court permitted the printed transcript to be filed no later than February 15, 1981; and informed all parties that oral argument was scheduled for June 1981 and that the filing of briefs would be governed by that hearing date. On February 13, 1981, the printed transcript was timely filed with the court.

On February 17, 1981, Bell moved for leave to intervene in Appeal No. 80–19, the motion presently under consideration. Subsequently, Krupp supported Bell, the ITC did not oppose the motion, Southwire

---

[2] The ITC determinations were referred to the President pursuant to subsec. (g) of sec. 337 and were approved by his representative on Jan. 23, 1980.

[3] This court denied motions by Krupp and Bell to dismiss the cross-appeal as untimely. *Southwire Co.* v. *USITC*, 67 CCPA——, 206 USPQ 306 (1980).

[4] Appeal No. 80–14 was dismissed on Mar. 26, 1980. *American Telephone & Telegraph* v. *USITC*, 67 CCPA——, 626 F. 2d 841, 206 USPQ 222. Appeal No. 80–15 was dismissed on Mar. 26, 1980. *Krupp International* v. *USITC*, 67 CCPA——, 626 F. 2d 843, 206 USPQ 223. Appeal Nos. 80–23 and 80–26 were dismissed on June 4, 1980. *Krupp International* v. *USITC*, 67 CCPA——, 626 F. 2d 844, 206 USPQ 310 (wherein this court stated that Krupp and Bell could participate as appellees in Southwire's cross-appeal, No. 80–21).

filed its opposition, and on March 9, 1981, Bell filed a reply to the opposition.

OPINION

Bell bases its Motion for Leave to Intervene on (1) its interest in the outcome of the appeal by virtue of an alleged potentially reduced resale value of certain equipment due to the ITC's findings; (2) Bell's unique knowledge of various facts pertinent to the appeal; and (3) the lack of prejudice to any of the parties.

Southwire argues, among other things, that Bell's motion is untimely under rule 15(d) of the Federal Rules of Appellate Procedure (FRAP).

Bell replies that CCPA Rule 1.4(c) allows this court to waive the time limits of FRAP 15(d) for good cause and that good cause is shown by the following: (1) Bell's appeals in Nos. 80–14 and 80–26 were dismissed after the 30-day time limit of FRAP 15(d); (2) Bell, with some surprise, learned only recently of Southwire's purported present position concerning licensing of one particular patent involved in Appeal No. 80–19; and (3) Bell's interest and the public interest would be advanced by Bell's participation in No. 80–19.

[2] The CCPA rules do not specifically provide for intervention in appeals from final determinations of the ITC. However, CCPA rule 1.4(a) does state that the "Federal Rules of Appellate Procedure shall govern any practice or procedure not specifically covered by these rules." Thus intervention in this situation is governed by the applicable rules found in the Federal Rules of Appellate Procedure.

FRAP 15 furnishes guidelines for review of orders of administrative agencies, boards, commissions and officers by Federal courts of appeals. Specifically, FRAP 15(d) concerns intervention in the Federal appellate review process and states:

> Unless an applicable statute provides a different method of intervention, a person who desires to intervene in a proceeding under this rule shall serve upon all parties to the proceeding and file with the clerk of the court of appeals a motion for leave to intervene. The motion shall contain a concise statement of the interest of the moving party and the grounds upon which intervention is sought. A motion for leave to intervene or other notice of intervention authorized by an applicable statute shall be filed within 30 days of the date on which the petition for review is filed.

[3] Since no applicable statute exists to provide a different method of intervention, rule 15(d) procedure is applicable to motions for leave to intervene in this court's review of ITC final determinations.

[4] Appeal No. 80–19 was filed on February 19, 1980. Under FRAP 15(d), assuming no extensions of time were granted under CCPA rules 1.4(c) and 5.2(d), infra, any motion for leave to intervene

would have to have been filed within 30 days of that date, i.e., no later than March 20, 1980. Without requests for or grants of extensions of time, Bell's motion was filed on February 17, 1981, some 334 days late.

[5] As noted by Bell, this court may waive or modify any provision of its own rules or applicable FRAP rules on motion and for good cause under CCPA rule 1.4(c). Where the request concerns an extension of time, consideration of such a request must be made in light of CCPA rule 5.2(d) which permits an untimely action to be taken where a motion has been filed after the expiration of a controlling specified time period (as is the case here) only "where the failure to act was excusable."

[6] Reviewing the motion papers before us and considering the arguments presented, we conclude that good cause has not been established here to waive the FRAP 15(d) 30-day time period. We also conclude that Bell's failure to act in a timely manner was not excusable.

The untimeliness of the motion for leave to intervene is amplified by the eleventh hour filing approach taken by Bell. All parties to the appeals were informed by this court on December 3, 1980, that the printed consolidated transcript would have to be filed by February 15, 1981, that the hearing date was set for June 1981, and that the filing of briefs would be governed by the June 1981 date. Thus the February 15, 1981 deadline was known well in advance by Bell. Still Bell filed its motion after that deadline, 3 days after the actual filing of the transcript, probably well into the brief preparation period, and very near to the brief filing period of Appeal Nos. 80–19 and 80–21.[5]

Accordingly, Bell's motion for leave to intervene is denied.

---

[5] On Mar. 6, 1981, a motion was filed to extend the time for filing appellants' briefs to Apr. 3, 1981, appellees' briefs to May 13, 1981, and reply briefs to May 29, 1981. We granted that motion on Mar. 9, 1981. As previously noted, this court has stated that Bell could participate in Appeal No. 80-21 as an appellee, n. 4 supra, which Bell has chosen to do.

338-816 O - 81 - 4

United States Court of International Trade

One Federal Plaza

New York, N.Y. 10007

Chief Judge

Edward D. Re

Judges

Paul P. Rao
Morgan Ford
Scovel Richardson
Frederick Landis
James L. Watson
Herbert N. Maletz
Bernard Newman
Nils A. Boe

Senior Judge

Samuel M. Rosenstein

Clerk

Joseph E. Lombardi

Decisions of the United States Court of International Trade

(Slip OP. 81–22)

WEAR ME APPAREL CORPORATION, PLAINTIFF *v.* UNITED STATES OF AMERICA, UNITED STATES CUSTOMS SERVICE, ROBERT E. CHASEN, DENNIS SNYDER, BENJAMIN JEFFERSON, ROY DEWING, JOHN MARTUGE, DEFENDANTS

Court No. 80–11–00057

On Defendants' Motion To Dismiss

(Dated March 10, 1981)

Rivkin, Sherman, and *Levy* (*Joseph S. Kaplan, Charles H. Bayar,* and *Dennis A. Adelson* of counsel) for the plaintiff.

Thomas S. Martin, Acting Assistant Attorney General; *Joseph I. Liebman,* Attorney in Charge, International Trade Field Office, Commercial Litigation Branch (*Jerry P. Wiskin* on the brief), for the defendants.

MALETZ, Judge: Plaintiff, an importer of children's clothing, brought this action under the Customs Courts Act of 1980 (94 Stat. 1727) contesting Customs' refusal to permit the entry for consumption of merchandise that plaintiff purchased in Taiwan.

The merchandise consists of (1) children's short sets which are two-piece top and bottom combinations; and (2) children's trunks. The merchandise is subject to a quantitative textile import quota restriction and must be classifiable under an unfilled quota category in order to be entered for consumption into the United States. In this connection, it appears that quota categories 359 and 659 covering swimwear or other wearing apparel are unfilled and plaintiff claims that the merchandise is classifiable under those categories. Customs, on the other hand, has indicated that the merchandise is properly classifiable under a filled quota category and thus may not be entered for consumption into the United States.

Some of the merchandise has been imported and entered for consumption, but Customs has demanded its redelivery; some has been imported and entered in a bonded warehouse, but Customs has informally advised plaintiff that none of that merchandise may be withdrawn for consumption; and some of the merchandise has been imported, but on August 22, 1980, was refused entry by Customs for consumption. The remainder of the merchandise is in transit to the United States or is still in Taiwan.

With respect to the merchandise excluded from entry, plaintiff filed a protest on November 19, 1980, and on November 21, 1980, filed the present action. Subsequently, the protest was denied on December 19, 1980.

With respect to the merchandise which Customs has demanded be redelivered, plaintiff has taken no steps to exhaust its administrative remedies. The remainder of the merchandise has not yet been subject to any official action by Customs.

Against this background, plaintiff seeks an order from the court (1) holding that the merchandise is subject to classification under category 359 or 659 as swimwear or other wearing apparel; (2) holding

that even if some or all of the merchandise is subject to classification under a category other than 359 or 659, such a determination should be applied prospectively only and should not apply to entries of that merchandise which was ordered from the manufacturer on or before August 21, 1980; and (3) directing the immediate release of such merchandise.

In addition, plaintiff moved for a preliminary injunction to restrain defendants from preventing the entry for consumption, and from requiring redelivery, of the merchandise. The court per Judge Newman denied this motion. 1 CIT ——, Slip Op. 80–13 (Dec. 15, 1980).

Defendants now move to dismiss the action for lack of jurisdiction arguing that since the present action was filed before the protest against the exclusion order of August 22, 1980, was denied, jurisdiction of that phase is lacking. Further, defendants argue that the court lacks jurisdiction of the remainder of the action on the ground that plaintiff has failed to exhaust its administrative remedies.

For the reasons set forth below, the court holds (1) that it has jurisdiction to entertain plaintiff's claims; (2) that it has the power to grant equitable relief; (3) that that portion of the action which contests Customs' exclusion order of August 22, 1980, should not be dismissed; and (4) that the remainder of the action should be dismissed as not ripe for adjudication.

We start by considering plaintiff's claims arisingjfrom the merchandise which was excluded from entry by Customs. As previously indicated, plaintiff protested this exclusion but then sued in this court before its protest was denied.

It is settled that prior to the enactment of the Customs Courts Act of 1980, this court lacked jurisdiction to entertain an action challenging a protest if the action was filed before the protest was denied. See, e.g., *United States* v. *Reliable Chemical Co.*, 66 CCPA 123, C.A.D. 1232, 605 F. 2d 1179 (1979). The passage of the Customs Courts Act of 1980 did not completely eliminate this requirement. Thus, prior denial of a protest is still needed if this court's jurisdiction is invoked under 28 U.S.C. 1581(a). That section provides that this court "shall have exclusive jurisdiction of any civil action commenced to contest the denial of a protest, in whole or in part, under section 515 of the Tariff Act of 1930." As the House Committee on the Judiciary stated (H.R. Rept. No. 96–1235, 96th Cong., 2d Sess. 44 (1980)): "Under the Customs Courts Act of 1980, the filing and *denial* of a protest will continue as prerequisites to the commencement of a civil action brought pursuant to proposed section 1581(a)." [Italics added.]

However, section 1581(a) is not the only jurisdictional provision applicable here. Thus, 28 U.S.C. 1581(i) provides:

> * * * the Court of International Trade shall have exclusive jurisdiction of any civil action commenced against the United

States, its agencies, or its officers, that arises out of any law of the United States providing for—

* * * * * * *

(3) embargoes or other quantitative restrictions on the importation of merchandise for reasons other than the protection of the public health or safety; or

(4) adminsitration and enforcement with respect to the matters referred to in paragraphs (1)–(3) of this subsection and subsections (a)–(h) of this section.

Section 1581(i), as explained by the House Committee on the Judiciary (H.R. Rept. No. 96–1235, supra at 47), provides a broad "residual grant of jurisdictional authority * * * to eliminate the confusion which currently exists as to the demarcation between the jurisdiction of the district courts and the Court of International Trade * * * [and] makes it clear that all suits of the type specified are properly commenced only in the Court of International Trade."

Given the fact that the claims as to which a protest has been filed directly concern an import quota, these claims obviously arise "out of * * * [a] law * * * providing for * * * quantitative restrictions on the importation of merchandise." In that circumstance, section 1581(i)(3) specifically grants this court jurisdiction to entertain these claims.

Moreover, since these claims involve the administration and enforcement of quantitative restrictions, section 1581(i)(4) also provides jurisdiction.

It is important to add that section 1581(i) does not require the filing or denial of a protest as a prerequisite for the exercise of jurisdiction by this court. Therefore, the court has subject matter jurisdiction of plaintiff's claims challenging the exclusion order even though suit was brought prior to the denial of the protest.

This does not mean, however, that by invoking the jursidiction of the court under section 1581(i) the mandate of section 1581(a) requiring the exhaustion of administrative remedies, i.e., the filing and denial of a protest, may thereby be dispensed with. Save in those circumstances where equity requires otherwise, the exhaustion of administrative remedies is necessary. See H.R. Rept. No. 96–1235, supra at 44; S. Rept. No. 96–466, 96th Cong., 1st sess. 7 (1979). Since such circumstances are not present here, plaintiff's claims challenging the exclusion order would normally have been dismissed inasmuch as the action was filed before the protest was denied; but in view of the fact that plaintiff's protest has already been denied, its administrative remedies have already been exhausted. Consequently, dismissal of this portion of plaintiff's action would be an empty formalism because plaintiff could immediately after dismissal file a new action over which this court would unquestionably have jurisdiction under section 1581(a). However, in the interest of pro-

cedural clarity, plaintiff is directed to file within 30 days an amended complaint with respect to those of its claims as to which a protest has been denied.

We come next to plaintiff's claims regarding the balance of its merchandise; i.e., the imported merchandise which Customs has demanded be redelivered, the merchandise entered in the bonded warehouse, and the merchansise in transit to the United States or still in Taiwan. Despite their differing status, plaintiff's claims as to all this merchandise once again arise out of both laws providing for quantitative restrictions on importation and laws providing for the administration and enforcement of such restrictions. These claims, therefore, are also within the jurisdiction of this court by virtue of section 1581(i).

It is further to be observed that not only does this court have subject matter jurisdiction as to all of plaintiff's claims, it also has the power to do equity regarding them by virtue of 28 U.S.C. 1585 and 2643 (c)(1) which likewise were provided for in the Customs Courts Act of 1980. Section 1585 specifies that this court "shall possess all the powers in law and equity of, or as conferred by statute upon, a district court of the United States." Under this section, it is clear that this court "does possess the same plenary powers as a Federal district court." H.R. Rept. No. 96–1235, supra at 50. Added to that, section 2643(c)(1) provides that (with certain exceptions not relevant here), this court "may * * * order any * * * form of relief that is appropriate in a civil action, including, but not limited to, declaratory judgments, orders of remand, injunctions, and writs of mandamus and prohibition." As the House Committee on the Judiciary stated (id. at 61): "Subsection (c)(1) is a general grant of authority for the Court of International Trade to order any form of relief that it deems appropriate under the circumstances [and] [i]t is the Committee's intent that this authorization be deemed to grant the Court of International Trade remedial powers coextensive with those of a Federal district court." See also, e.g., *Zenith Radio Corporation* v. *United States*, 1 CIT ——, Slip Op. 80–10 at 7 (Dec. 9, 1980); *Sanho Collections, Ltd.* v. *Chasen, et al.*, 1 CIT ——, Slip Op. 80–2 at 10 (Nov. 14, 1980).

Even though this court has jurisdiction, this does not mean that dismissal of each of plaintiff's claims is thereby automatically avoided. Thus, as to the claims covering the merchandise which Customs has demanded be redelivered, it is significant that such demand was protestable under 19 U.S.C. 1514(a)(4). Plaintiff, however, filed no protest and has therefore failed to exhaust its administrative remedies. Relevant on this score is 28 U.S.C. 2637(d) which provides that this court "shall, where appropriate, require the exhaustion of administra-

tive remedies." Relying on this provision, plaintiff argues that the court should not require it to exhaust its administrative remedies on the basis that exhaustion would be futile, but the fact that plaintiff may not succeed in its claim at the administrative level does not justify noncompliance with the statutory scheme enacted by Congress. As the Supreme Court stated in *United States* v. *Felt & Tarrant Co.*, 283 U.S. 269, 273 (1931):

> The necessity for filing a claim such as the statute requires is not dispensed with because the claim may be rejected. It is the rejection which makes the suit necessary. An anticipated rejection of the claim, which the statute contemplates, is not a ground for suspending its operation. * * *

What is more, the requirement of exhaustion would not have been particularly time-consuming in light of the fact that section 174.21(b) of the Customs Regulations (19 CFR 174.21(b)) requires that any protest relating to an administrative action involving exclusion of merchandise from entry or delivery must be acted on within 30 days after the protest was filed.

In short, plaintiff has failed to show that the exhaustion of administrative remedies should not be required here. Accordingly, that portion of the action covering merchandise which Customs has demanded be redelivered is presently not ripe for adjudication. See, *Sanho Collections, Ltd.* v. *Chasen, et al., supra*, Slip Op. at 9.

We turn next to the merchandise entered in a bonded warehouse which Customs has informally indicated may not be withdrawn for consumption. The record shows that Customs has taken no formal administrative action with respect to that merchandise. Plaintiff, however, can obtain such action merely by attempting to remove the goods. Finally, with respect to the merchandise in transit or still in Taiwan, no action of any kind has been taken by Customs.

It is true that formal agency action is not an invariable requisite for relief. *Northeast Airlines, Inc.* v. *C.A.B.*, 345 F. 2d 662, 664 (1st Cir. 1965); *Isbrandtsen Co.* v. *United States*, 211 F. 2d 51, 55 (D.C. Cir. 1954), *cert. denied*, 347 U.S. 990 (1954). However, the court should not interfere unnecessarily with administrative determinations that are not yet formalized. *Abbott Laboratories* v. *Gardner*, 387 U.S. 136, 148 (1967); *State of New York* v. *United States*, 568 F. 2d 887, 893 (2d Cir. 1977). Given the factual situation here, this latter consideration is particularly applicable. Thus the court concludes that plaintiff's claims regarding the merchandise which is in the bonded warehouse, which is in transit to the United States, and which is in Taiwan are not ripe for adjudication.

Last, plaintiff urges that if the court finds that it is appropriate to require exhaustion of administrative remedies, it should not dismiss the

action but rather should retain it and remand it to Customs for further proceedings under a protective order. While 28 U.S.C. 2643(c)(1) authorizes the court to remand a case, or a portion thereof, there is nothing in the present record to warrant such action.

For the foregoing reasons, defendants' motion to dismiss is (1) denied as to plaintiff's claims involving the merchandise covered by the denied protest and (2) granted as to plaintiff's claims covering the remainder of the merchandise.

(Slip Op. 81–23)

MACALLOY CORPORATION, PLAINTIFF *v.* UNITED STATES, DEFENDANT

Order

Court No. 76–3–00643

(Dated March 10, 1981)

RICHARDSON, Judge: Upon reading and filing plaintiff's motion for partial summary judgment and defendant's response thereto conceding that on the basis of the record herein the preferential railroad freight rates charged by South African Railways and Harbours upon shipments of ferrochrome constitute the payment or bestowal of a bounty or grant upon exports of ferrochrome from the Republic of South Africa within the meaning of section 303 of the Tariff Act of 1930, as amended (19 U.S.C. 1303), and upon all other papers and proceedings had herein, it is hereby

ORDERED, ADJUDGED, AND DECREED that plaintiff's motion for partial summary judgment be, and the same is, granted, and it is further

ORDERED, ADJUDGED, AND DECREED that the charging of preferential railroad freight rates upon shipments of ferrochrome for export from the Republic of South Africa by South African Railways and Harbours, constitutes the payment or bestowal of a bounty or grant within the meaning of section 303 of the Tariff Act of 1930, as amended (19 U.S.C. 1303), and it is further

ORDERED, ADJUDGED, AND DECREED that the Secretary of Commerce shall instruct the appropriate Customs officers throughout the United States to suspend liquidation and to collect estimated countervailing duties, and thereafter to assess countervailing duties in an amount equal to the net amount of the subsidy (bounty or grant) as determined or estimated by the Secretary of Commerce pursuant to section 751 of the Tariff Act of 1930, as added by the Trade Agreements Act of 1979 (19 U.S.C. 1675), on ferrochrome from the Republic of South Africa entered, or withdrawn from

warehouse for consumption, on or after the day following the date of entry of this order.

(Slip Op. 81–24)

NEW YORK MERCHANDISE CO., INC., PLAINTIFF *v.* UNITED STATES, DEFENDANT

Fiber Optic Lights

Court No. 75–2–00514

PORTABLE ELECTRIC LAMPS WITH SELF-CONTAINED ELECTRICAL SOURCE—BATTERY-OPERATED FIBER OPTIC LIGHTS—COMMON MEANING OF "LAMP"

Battery-powered fiber optic lights, comprising decorative, mood-setting articles with a negligible capacity for illumination of the area surrounding the articles, were classified by Customs under item 683.80, TSUS as portable electric lamps with self-contained electrical source. Plaintiff claims that the imports are properly dutiable under item 688.40, TSUS as electrical articles not specially provided for. The sole issue for determination is whether the imports are lamps within the common meaning of that term. *Held:* Articles which utilize light purely for its decorative effect and to furnish illumination to the articles themselves, and do not have any substantial capacity for illuminating the surrounding area, are not illuminating articles and thus are not lamps within the purview of item 683.80, TSUS. The imports are electrical articles n.s.p.f., and hence are properly dutiable under item 688.40, TSUS, as claimed by plaintiff. *Cf. Ross Products, Inc.* v. *United States*, 58 CCPA 1, C.A.D. 994, 433 F. 2d 804 (1970); *Amico, Inc.* (formerly known as: Exhibit Sales, Inc.) v. *United States*, 71 Cust. Ct. 182, C.D. 4494 (1973). *United States* v. *Morris Friedman & Co.*, 63 CCPA 5, C.D. 1156, 524 F. 2d 745 (1975) distinguished.

[Judgment for plaintiff.]

Stein, Shostak, Shostak & O'Hara, Inc. (*John N. Politis*, Esq. of counsel) for the plaintiff.

Thomas S. Martin, Acting Assistant Attorney General; *Joseph I. Liebman*, Attorney in Charge, International Trade Field Office, Commercial Litigation Branch (*Susan Handler-Menahem*, trial attorney) for the defendant.

(Decided March 12, 1981)

NEWMAN, Judge: Plaintiff contests the classification by Customs at the port of Los Angeles of certain merchandise invoiced as a Plastic "Star Lite," imported from Hong Kong in 1972. Upon liquidation of the entry, the merchandise was assessed with duty at the rate of 13.75 per centum ad valorem under the provision in item

683.80 of the Tariff Schedules of the United States (TSUS) for "other" portable electric lamps with self-contained electrical source. Plaintiff claims that the imports are properly dutiable at the rate of 5.5 per centum ad valorem under the provision in item 688.40, TSUS, as modified by T.D. 68–9, for electrical articles not specially provided for.

ISSUE PRESENTED

It is undisputed that the imported articles are portable and have a self-contained electrical source. The sole issue for determination is whether the articles are lamps within the purview of item 683.80, TSUS.

THE RECORD

At the trial, the parties each presented the testimony of one witness and submitted several exhibits.[1] Plaintiff's witness was Ko Yamaguchi, a buyer and general manager of the Los Angeles branch of New York Merchandise; defendant's witness was Leonard W. Cheslak, president of Poly Optical Products. The official entry papers were received in evidence as an unmarked exhibit.

The pertinent facts are:

It appears that the subject merchandise, marketed under the name "Glo-Lite", comprises a battery-powered[2] fiber optic light enclosed in a transparent plastic globe mounted to a plastic base. The fiber optic component is mounted in the plastic base over a small light bulb. When battery power is activated by an on/off switch, the light from the bulb diffuses throughout the fibers and pinpoints of light glow at the ends of the individual fibers, creating a decorative and mood-setting effect.

A courtroom demonstration and a personal inspection of the samples in a darkened room reveal that the degree of illumination of the area immediately surrounding the articles is insufficient for their normal use as lamps for reading or working. Basically, the imports are self-illuminating, and the purpose of the light is simply to create a decorative effect. Additionally, while the imports are represented on their containers as a "Nite Lite", it is plain that the use of the articles as

---

[1] Plaintiff objected to the admission into evidence of defendant's exhibit C for identification, and I reserved ruling on the objection (R. 60–61). The proposed exhibit is ostensibly a catalog of Hammacher Schlemmer, with the back cover depicting certain fiber optic lamps. Defendant's witness admitted on voir dire that he had no connection with the publication of the catalog or with Hammacher Schlemmer, and that he had never seen the proposed exhibit before it was presented to him at the trial. Statements by Government counsel at the trial as to the source of the exhibit (R. 57, 60) are, of course, not evidence in the case. In its post-trial brief, defendant has not pressed the admissibility of exhibit C for identification. Since authentication and identification of the proposed exhibit is totally lacking (see rules 901 and 902 of the Federal Rules of Evidence), plaintiff's objection is sustained. Accordingly, all testimony of defendant's witness concerning the fiber optic devices depicted in the catalog (R. 56–57, 61–62) is stricken from the record.

[2] Batteries were not included in the importation.

night-lights would require such frequent battery changes as to make that use economically impracticable.

Fiber optic lights (as a class) are sold in a variety of outlets: drugstores, discount houses, lamp stores, mail-order catalog houses, and stores selling decorative accessory articles. Interestingly, in department stores, fiber optic lights are sold in the lamp, audio, and stationery departments.

PARTIES' CONTENTIONS

Plaintiff contends that the "Glo-Lites" are not lamps because they do not provide practical illumination, but merely illuminate themselves as decorative, mood-setting articles. Defendant maintains that the imported articles are lamps because they furnish artificial light, and the amount of artificial light produced is immaterial. Defendant further argues that the imports can illuminate the surrounding area sufficiently to act as a night-light, flashlight, or as a source of light for reading. Lastly, defendant stresses that item 683.80 is an eo nomine provision and therefore the use of the imports as decorative articles is irrelevant.

DISCUSSION

As noted, plaintiff urges that, for classification as lamps under item 683.80, TSUS, the subject merchandise must constitute illuminating articles and thus serve as a practical source of illumination outside of the articles themselves. In this connection, plaintiff aptly points out that term "lamps" appears in several places under the superior heading to items 653.30 through 653.39, TSUS, which superior heading provides for "illuminating articles and parts thereof, of base metal". Fundamentally, absent any indication of contrary legislative intent, the term "lamp" must be presumed to have been used in the same sense throughout the statute. *Productol Chemical Co.* v. *United States*, 74 Cust. Ct. 138, 151, C.D. 4598 (1975), and cases cited. No legislative history has been called to my attention which establishes that the term "lamp" in item 683.80 was intended to have a different meaning than that implied by the superior heading to items 683.30 through 653.39. Hence, plaintiff's construction of the term "lamp" in item 683.80 as an illuminating article has merit.

The record, however, clearly establishes that the imports are decorative articles and have an extremely low level of illuminating capacity outside of the articles. They are entirely inadequate where any significant illumination outside the articles themselves is required for tasks such as reading or navigation. The instant facts are strikingly analogous to those in *Ross Products, Inc.* v. *United States*, 58 CCPA 1, C.D. 994, 433 F. 2d 804 (1970). There, the merchandise comprised decora-

tive planters in the form of simulated bird cages containing a number of artificial roses of plastic material with small electric bulbs in the rosebuds. Since the articles could not provide any significant illumination of the surrounding area, the appellate court rejected the argument that they were classifiable as illuminating articles under item 653.40, TSUS. Moreoves, the following rationale in Ross Products is particularly significant (58 CCPA at 5):

> Considering next the facts established by the record, the Customs Court found:
>
> > According to the testimony in the case at bar, the articles were designed to make use of the lights. The tint of the bulb was carefully chosen to produce the kind of lighting effect desired. The lighting was to enhance the decorative effect of the articles. The bulbs gave light to the artificial flowers and would, of course, glow in a darkened room and give some light to the surrounding area.
>
> While, again, we do not disagree with that analysis, we think that the record clearly warrants the further conclusion that the importations are basically decorative articles and are useful as decorations in lighted areas as well as in the dark and with their bulbs unlighted as well as lighted. The function of the lights is to enhance the decorative effect of the articles by serving as a part of the artificial flowers as well as by furnishing illumination to the articles themselves. Any lighting of the surrounding space is only incidental to the use of the importations as decorative articles which may be at least partially self-illuminated.
>
> It may well be, as urged here and apparently stressed below, that *articles which are lamps or lights are, either by common or commercial understanding, also illuminating articles*, even in the case of highly decorative lamps or of night lights (which are obviously used to illuminate an area even though they produce only a minimum amount of light). *However, neither the testimony of record nor inspection of the representative exhibits warrants a conclusion that the present articles are "lamps" or "lights". Rather the record is convincing that they are decorative articles in the form of planters having no substantial use as articles for illuminating the surrounding area.* Thus, any presumption of substantial use as an illuminating article that might arise from the original classification of the articles under item 653.40 is overcome. [Italic added.]

Predicated upon the foregoing rationale in *Ross Products*, it follows: Articles which utilize light purely for its decorative effect and to furnish illumination to the articles themselves, and do not have any substantial capacity for illuminating the surrounding area, are not illuminating articles, and consequently are not lamps within the common meaning of that term.

Plaintiff's contention—that devices having negligible illuminating capacity and primarily used for purposes other than illumination are not classifiable as portable electric lamps—is also amply supported by *Amico, Inc.* (formerly known as: Exhibit Sales, Inc.) v.

United States, 71 Cust. Ct. 182, C.D. 4494 (1973). There, the question was whether certain so-called "Clown Flashlights" were properly classifiable under item 683.70, TSUS, as flashlights. The provision in item 683.70, TSUS for flashlights is indented under the same superior heading, viz., "portable electric lamps with self-contained electrical source * * *", as is involved in the present case. The evidence in *Amico* established that the so-called flashlights were not usable as a source of light for practical illumination, but were chiefly used as playthings by children for their amusement. On the basis of those facts, Judge Maletz held that the articles in question were improperly classified by the Government as flashlights, and were properly dutiable as toys.

Obviously, then, the negligible illuminating capacity of the articles in *Amico* was a critical circumstance in determining whether they were properly classified as portable electric lamps (flashlights) under item 683.70, TSUS.

In light of the rationale applied by the courts in *Ross Products* and *Amico*, I must reject defendant's contention that a device that emits light is a lamp, no matter how negligible the illumination produced by the article.

Additionally, plaintiff's contention that the term "lamp" connotes practical illuminating capacity outside of the article itself is supported by the testimony of defendant's witness, who testified that a lamp is "a practical source of light for practical purposes" (R. 70). This definition agrees with that of plaintiff's witness, who stated that a lamp is an illuminating article which provides artificial light for reading, working, and other purposes (R. 14). Respecting illuminating capacity, defendant's witness admitted that battery-powered articles, such as those before the court, have only one or two candlepower, whereas a.c. powered conventional fiber optic lamps have a candlepower 10 to 100 times greater. Further, defendant's witness confirmed that the decorative features of the imports are their main selling point rather than the negligible illumination they could provide in an emergency; and the witness readily distinguished the imports from conventional a.c. 120-volt fiber optic lamps which are covered by Underwriter Laboratories specifications [3] and building codes.

In sum, plainly the imports are not comparable in illuminating capacity to the fiber optic lights operated by a.c. current, which the Government apparently had in mind in classifying the instant merchandise as lamps. In this connection, it must be emphasized that the issue here is not whether fiber optic lights as a class are lamps, but whether the specific merchandise in the case falls within that term.

[3] The fiber optic lights listed with the Underwriters Laboratories are the line voltage, a.c., 120-volt type which is plugged into an electrical wall outlet.

In support of its argument that the common meaning of the term "lamp" embraces the subject merchandise, defendant cites *United States* v. *Morris Friedman & Co.*, 63 CCPA 5, C.A.D. 1156, 524 F. 2d 745 (1975). In that case, the issue was whether certain illuminating articles (viz, candlesticks, candleholders, menorahs, lanterns, and sanctuary lamps) which use candles as an illuminant were classifiable as lamps under item 653.35, TSUS. There was no dispute that the articles in question were illuminating devices, and the appellate court held that the common meaning of the term "lamp" (viz, device for furnishing artificial light) included candleholders. Clearly, the issue presently before me was not before the court in *Morris Friedman*.

Concerning whether the imports fall within the common meaning of the term "lamp" (as enuciated in *Morris Friedman*, *supra*), defendant's witness testified on direct examination (R. 63, 65):

> Q. Then you agree that they [plaintiff's exhibits 1 and 2 and defendant's exhibit A] are lamps within that definition [* * * a device for furnishing artificial light * * *]?
> A. *Not necessarily.* [Italic added.]
> Q. In what manner do you disagree?
> A. Because there is no industry standardization as to what is a lamp * * *.
>
> * * * * * * *
>
> Q. Can you tell me, when you market fiber optic lights, what you call them?
> A. I have to ponder over that.
>
> * * * * * * *
>
> Q. Well, do you ever call them lamps when you are selling fiber optic lights?
> A. We call them fiber optic lights.
> Q. Do you ever call them lamps?
> A. We have *some* models that are lamps. [Italic added.]

It is evident from the testimony of defendant's witness that he did not consider all fiber optic lights to be lamps, and that the term "lamps" would apply only to those articles that have the capacity to provide a practical source of illumination (R. 70).

Turning now to the factual issue of whether the imports could provide practical illumination for reading or navigation, as urged by defendant, the samples themselves are potent witnesses. *Cf. Amico, Inc., supra*; *The Ashflash Corporation* v. *United States*, 76 Cust. Ct. 112, 120, C.D. 4643, 412 F. Supp. 585 (1976). The demonstration at the trial, as well as a further examination in chambers of the lighted samples (exhibits 1 and A) in a darkened room, disclose that it is possible to read with the illumination provided by the articles. But it is obvious from their negligible illuminating capacity that the articles are not normally used for reading, and defendant's

witness so conceded (R. 71, 76). Also, my examination of the lighted articles in a darkened room convinces me that they would be virtually useless for navigation; and the contrary testimony of defendant's witness on this point (R. 74–75) is not credible. While the imports conceivably could be used as night-lights (as they are represented on their containers), the negligible outside illumination provided by the articles and the very limited life of batteries make the usefulness of the imports even as night-lights very tenuous.[4] The short of the matter is that the imports are novelty articles which makes use of light to enhance their decorative effect, and in glowing in a darkened room give off a small degree of illumination in the immediately surrounding area. However, such illumination is purely incidental to the use of the imports as decorative articles, and is inadequate for any practical use.

Plaintiff has overcome the presumption of correctness attaching to the district director's classification of the merchandise under item 683.80, TSUS. As in *Ross Products*, *supra*, the present articles—lighted decorative items—should be classified on the basis of their electrical characteristics rather than the light they furnish. Excepting its contention that the articles are properly dutiable under item 683.80, which classification I have found erroneous, the Government does not challenge plaintiff's claim for classification as electrical articles, n.s.p.f. in item 688.40, TSUS. Morever, the imports are undoubtedly electrical articles and the basket provision for electrical articles in item 688.40, TSUS appears applicable. Consequently, plaintiff's claim is sustained.

Judgment will be entered accordingly.

---

[4] The imports are quite different from portable battery-operated night-lights "designed to light automatically when lifted off a surface and switch off when set down again," which are designed to be carried around for intermittent use like a flashlight. See "Summaries of Trade and Tariff Information," schedule 6, vol. 10 (1969), p. 216; *Janex Corp. v. United States*, 80 Cust. Ct. 146, 156–57, C.D. 4748 (1978).

Decision of the United States Court of International Trade

Abstracts

Abstracted Protest Decisions

DEPARTMENT OF THE TREASURY, *March 16, 1981.*

The following abstracts of decisions of the United States Court of International Trade at New York are published for the information and guidance of officers of the customs and others concerned. Although the decisions are not of sufficient general interest to print in full, the summary herein given will be of assistance to customs officials in easily locating cases and tracing important facts.

WILLIAM T. ARCHEY,
Acting Commissioner of Customs.

DECISION NUMBER	JUDGE & DATE OF DECISION	PLAINTIFF	COURT NO.	ASSESSED	HELD	BASIS	PORT OF ENTRY AND MERCHANDISE
				Par. or Item No. and Rate	Par. or Item No. and Rate		
P81/26	Ford, J. March 9, 1981	Novo Enzyme Corporation	79-1-00029	Item 437.49 5%	Item 437.46 Free of duty	Novo Enzyme Corporation v. U.S. (C.D. 4809)	New York Rennet

P81/27	Richardson, J. March 9, 1981	Raytheon Company	78-6-01209	Item 687.60 6%	Items 687.60/807.00 6% upon value of integrated circuit or transistor, less declared values of prefabricated U.S. manufactured die, which values are set forth in schedule attached to decision and judgement	U.S. v. Texas Instruments Incorporated (C.A.D. 1178) Raytheon Company v. U.S. (Abs. P78/139)	San Francisco American goods returned; integrated circuits and transistors consisting of U.S. fabricated components assembled abroad and also subjected to a stabilization bake operation which was incidental to assembly
P81/28	Landis, J. March 9, 1981	Kufner Textile Corp.	79-1-00154, etc.	Item 327.13, 327.16, or 327.17 11.98%, 12.55%, or 12.74% Item 328.15 or 328.17 13.86% or 14.24% Item 323.10 or 332.40 15%	Item 355.65 8.5%	Bruce Duncan Co., Inc. v. U.S. (C.D. 4736)	Laredo Cotton woven fabrics
P81/29	Maletz, J. March 9, 1981	Amicale Industries, Inc.	76-3-00673	Item 337.20 60%	Item 337.20 11%	Agreed statement of facts	Philadelphia Pongee silk fabric made in the People's Republic of China, dyed and finished in Italy; imported into U.S. from Italy

DECISION NUMBER	JUDGE & DATE OF DECISION	PLAINTIFF	COURT NO.	ASSESSED	HELD	BASIS	PORT OF ENTRY AND MERCHANDISE
				Par. or Item No. and Rate	Par. or Item No. and Rate		
P81/30	Maletz, J. March 9, 1981	Peabody House, Inc.	79-8-01236	Item 382.00 35%	Item 382.12 8%	Agreed statement of facts	New York Ladies coats
P81/31	Richardson, J. March 11, 1981	Alltransport, Inc.	78-10-01727	Item 708.89 22.5% Item 722.34 10%	Item 708.80 15%	Wild Heerbrugg Instruments, Inc. v. U.S. (C.D. 4767, reh. denied C.D. 4781)	New York Microscopy phototubes
P81/32	Richardson, J. March 11, 1981	Sortex Co. of North America, Inc.	76-4-00947	Item 712.49 10.5% or 10%	Item 666.25 8% or 5.5%	Sortex Co. of North America, Inc. v. U.S. (C.D. 4746, aff'd. C.A.D. 1221)	Detroit Electronic color sorting machines and parts
P81/33	Maletz, J. March 11, 1981	Gambles Import Corporation	78-5-00880	Item 222.60 12.5%	Item A222.60 Free of duty pursuant to Generalized System of Preferences	Agreed statement of facts	Los Angeles Bamboo plate sets

P81/34	Maletz, J. March 11, 1981	Shayne Knitwear, Inc.	75-9-02422, etc.	Item 382.78 25¢ per lb. + 32.5% (blouses, pants, shirts, and skirts) Item 382.81 25¢ per lb. + 27.5% (blouses, pants, shirts, and skirts) Item 772.30 12.5% (jackets)	Item 772.30 12.5% Dutiable as entireties on basis of export value; said value is invoice unit price	J. C. Penney Purchasing Corporation v. U.S. (C.D. 4671)	New York Ladies 3-piece suits; entireties
P81/35	Boe, J. March 12, 1981	Texas Instruments Incorporated	77-9-03672	Item 720.75 22.5%	Item 687.60 6%	U.S. v. Texas Instruments Inc. (C.A.D. 1243)	Dallas (Houston) "Century Units"

Decision of the United States Court of International Trade

Abstracts

Abstracted Reappraisement Decisions

DECISION NUMBER	JUDGE & DATE OF DECISION	PLAINTIFF	COURT NO.	BASIS OF VALUATION	HELD VALUE	BASIS	PORT OF ENTRY AND MERCHANDISE
R81/88	Re, C.J. March 9, 1981	Merry Mary Fabrics, Inc.	78-11-01959, etc.	Export value	Appraised values specified on entry papers by liquidating officer, less any additions included in appraised value which reflect currency revaluation	C.B.S. Imports Corp. v. U.S. (C.D. 4739)	Los Angeles Various articles
R81/89	Re, C.J. March 9, 1981	Toyota Motor Sales, Inc.	76-11-02512, etc.	Export value	Appraised values specified on entry papers by liquidating officer, less any additions included in appraised values which reflect currency revaluation	C.B.S. Imports Corp. v. U.S. (C.D. 4739)	Los Angeles; New York Various articles

R81/90	Re, C.J. March 11, 1981	Holly Stores Inc.	78-6-00973	Export value	Appraised values shown on entry papers, less additions included in appraised values to reflect currency revaluation	C.B.S. Imports Corp. v. U.S. (C.D. 4739)	Los Angeles Wearing apparel, etc.
R81/91	Re, C.J. March 11, 1981	Paramount Apparel Ltd.	74-5-01198, etc.	Export value	Appraised values shown on entry papers, less additions included in appraised values to reflect currency revaluation	C.B.S. Imports Corp. v. U.S. (C.D. 4739)	New York Wearing apparel, etc.
R81/92	Re, C.J. March 11, 1981	Zercon International	74-6-01634, etc.	Export value	Appraised values shown on entry papers, less additions included in appraised values to reflect currency revaluation	C.B.S. Imports Corp. v. U.S. (C.D. 4739)	New York Wearing apparel, etc.
R81/93	Maletz, J. March 11, 1981	Sears, Roebuck and Co.	78-9-01548, etc.	Constructed value	Actual purchase price of merchandise of $9 per unit, plus 0.00052% for assists	Agreed statement of facts	Champlain—Rouses Point (Ogdensburg) Ladies knit dresses
R81/94	Re, C.J. March 12, 1981	Regal of California, Inc.	74-2-00377, etc.	Export value	Appraised values shown on entry papers, less additions included in appraised values to reflect currency revaluation	C.B.S. Imports Corp. v. U.S. (C.D. 4739)	Los Angeles Wearing apparel, etc.

DECISION NUMBER	JUDGE & DATE OF DECISION	PLAINTIFF	COURT NO.	BASIS OF VALUATION	HELD VALUE	BASIS	PORT OF ENTRY AND MERCHANDISE
R81/95	Re, C.J. March 12, 1981	Sanyo Electric Inc.	77-3-00495, etc.	Export value	Appraised values shown on entry papers, less additions included in appraised values to reflect currency revaluation	C.B.S. Imports Corp. v. U.S. (C.D. 4739)	New York Electrical articles, etc.
R81/96	Re, C.J. March 12, 1981	Twin Fashions, Inc.	78-4-00632	Export value	Appraised values shown on entry papers, less additions included in appraised values to reflect currency revaluation	C.B.S. Imports Corp. V. U.S. (C.D. 4739)	New York Wearing apparel, etc.

International Trade Commission Notices

Investigations by the U.S. International Trade Commission

DEPARTMENT OF THE TREASURY, *March 26, 1981.*

The appended notices relating to investigations by the U.S. International Trade Commission are published for the information of Customs Officers and others concerned.

R. E. CHASEN,
Commissioner of Customs.

---

19 CFR Part 200

AMENDMENTS TO AGENCY ETHICS RULES

AGENCY: U.S. International Trade Commission.

ACTION: Notice of final rules.

SUMMARY: Recent regulations issued by the Office of Government Ethics (OGE) redefine the qualifications and duties of designated agency ethics officials and list the elements of agency ethics programs. 46 F.R. 2582 (Jan. 9, 1981) (to be codified at 5 CFR 738.101–.313). The following amendments to Commission ethics regulations, 19 CFR, part 200, reflect the changes in OGE regulations. In addition, the Commission is abandoning its previous practice of requiring that its Ethics Counselor be a Commissioner. The Counselor must be a senior Commission employee with experience demonstrating the ability to coordinate and manage the program. This is in line with the practice of practically all other Government agencies. In addition, there are several technical and conforming changes reflecting that Commission employees who file SF 278 public financial disclosure reports need not file confidential financial disclosure reports under Executive Order No. 11222 and subpart C of part 200 of title 19, Code of Federal Regulations.

The Commission published proposed regulations for public comment. 45 F.R. 82957 (Dec. 17, 1980). Comment was received only from the

Office of Government Ethics, which suggested only two changes. Both have been incorporated, along with editorial change. Section 200.735–103(b) was altered to require that the Deputy Ethics Counselor be chosen by the chairman in accordance with 5 CFR 738.202(c), which directs that the head of an agency select the two individuals entrusted with certifying the financial disclosures filed for confirmation purposes by Presidential nominees. A phrase was added to section 200.735–103(c)(2) clarifying that the Ethics Counselor reviews and certifies the financial disclosure reports of nominees to the Commission, in accordance with statutory and regulatory mandate.

EFFECTIVE DATE: March 15, 1980.

FOR FURTHER INFORMATION CONTACT: Michael B. Jennison of the Office of General Counsel at 202–523–0350.

SUPPLEMENTARY INFORMATION: The U.S. International Trade Commission amends 19 CFR part 200 as follows:

1. In sections 200.735–101 and 200.735–102(a)(b), change "U.S. Tariff Commission" to read "U.S. International Trade Commission."

2. Section 200.735–102(c) is changed to read:

(c) "Employee" means a Commissioner, employee, or special Government employee of the Commission.

3. Add section 200.735–102(g):

(g) "Ethics Counselor" means designated agency ethics official as defined in subpart B of part 738, Code of Federal Regulations.

4. Delete present section 200.735–103 and add: Section 200.735–103, Counseling service.

(a) The chairman shall appoint an Ethics Counselor, who serves as the Commission's designated agency ethics official and liaison to the Office of Government Ethics and who is responsible for carrying out the Commission's ethics program. The program shall be designed to implement titles II, IV, and V of the Ethics in Government Act of 1978, Executive Order No. 11222, the regulations in this part, and other statutes and regulations applicable to agency ethics matters. The Ethics Counselor will be a senoir Commission employee with experience demonstrating the ability to review financial disclosure reports and counsel employees with regard to resolving conflicts of interest, review the financial disclosures of Presidential nominees to the Commission prior to confirmation hearings, counsel employees with regard to ethics standards, assist supervisors in implementing the Commission's ethics program, and periodically evaluate the ethics program.

(b) The chairman shall select a Deputy Ethics Counselor, who will serve as alternate agency ethics official and to whom any of the Counselor's statutory and regulatory duties may be delegated.

(c) The Ethics Counselor shall coordinate and manage the agency's ethics program. The Counselor's duties shall consist of—

(1) Liaison with the Office of Government Ethics;

(2) Review of financial disclosures reports, including reports filed by Presidential nominees to the Commission, except that reports filed by Commissioners other than the chairman shall be reviewed by the chairman and the report filed by the chairman shall be reviewed by the vice chairman;

(3) Initiation and maintenance of ethics education and training programs;

(4) Monitoring administrative actions and sanctions; and

(5) Implementation of the specific program elements listed in the Office of Government Ethics regulations, 5 CFR 738.203(b).

5. Section 200.735–114 is changed to read as follows: Section 200.735–114, employees required to submit statements.

Except as provided in section 200.735–114a, the following employees shall submit confidential statements of employment and financial interests:

(a)(1) Employees in grade GS–13 or above under section 5332 of title 5, United States Code, or in comparable or higher positions not subject to that section, other than those employees who are required to file public financial disclosure reports by title II of the Ethics in Government Act of 1978.

(2) The Director of Personnel shall list all such positions, shall include the listing in the chapter of the Commission's Policy Manual pertaining to the filing of confidential statements of employment and financial interests, and shall furnish copies thereof to the Deputy Counselor and to affected employees.

(3) The Director of Personnel shall update the listing required by paragraph (a)(2) of this section and shall take all other steps required by paragraph (a)(2) as of January 1 and July 1 of each year.

(b)(1) Employees classified below GS–13 under section 5332 of title 5, United States Code, or at a comparable pay level under other authority, other than those employees who are required to file public financial disclosure reports by title II of the Ethics in Government Act of 1978, who are (i) responsible for making a decision or taking an action in regard to Commission contracting or procurement, (ii) responsible for conducting investigative and research activities where the decision to be made or action to be taken could have an economic impact on any non-Federal enterprise, or (iii) responsible for exercising the authority of any supervisory or investigative employee in the absence of such employee.

(2) The Director of Personnel, upon obtaining the advice of the General Counsel, shall be responsible for determining which positions

below GS–13 meet the criteria of paragraph (b)(1) of this section. The Director of Personnel shall justify his or her determination in writing and shall submit it to the Office of Personnel Management for its approval. Upon obtaining the approval of the Office of Personnel Management, the Director of Personnel shall include the listing of these positions in the chapter of the Commission's Policy Manual pertaining to the filing of confidential statements of employment and financial interests and shall furnish copies thereof to the Deputy Counselor and to affected employees.

(3) The Director of Personnel shall evaluate the determination under paragraph (b)(2) of this section as of January 1 and July 1 of each year. When organizational changes or personnel actions indicate that positions should be either added to or taken from the list of positions which the Director of Personnel has determined meet the criteria of paragraph (b)(1) of this section, the Director of Personnel shall make a new determination under paragraph (b)(2) of this section and shall take all other steps required by paragraph (b)(2) immediately upon the implementation of said organizational changes or personnel actions.

By order of the Commission.

Issued: March 10, 1981.

KENNETH R. MASON,
Secretary.

In the Matter of CERTAIN WINDOW SHADES AND COMPONENTS THEREOF	Investigation No. 337–TA–83

Notice of Termination

AGENCY: U.S. International Trade Commission.

ACTION: Termination of the investigation as to two respondents based on the issuance of consent orders and upon settlement agreements.

SUMMARY: Notice is hereby given that the Commission has approved and issued consent orders (summarized in the Federal Register of Jan. 28, 1981, 46 F.R. 9261) in the above-entitled investigation, thereby terminating the investigation as to respondents Joanna Western Mills and Breneman, Inc.

AUTHORITY: The authority for Commission disposition of this matter is contained in section 337 of the Tariff Act of 1930 (19 U.S.C. 1337) and in section 210.55 of the Commission's Rules of Practice and Procedure (19 CFR 210.55).

SUPPLEMENTARY INFORMATION: Copies of the Commission Action and Order and all other nonconfidential documents filed in connection with this investigation are available for inspection during official business hours (8:45 a.m. to 5:15 p.m.) in the Office of the Secretary, U.S. International Trade Commission, 701 E Street NW., Washington, D.C. 20436, telephone 202–523–0161.

FOR FURTHER INFORMATION CONTACT: Jack Simmons, Esq., Office of the General Counsel, U.S. International Trade Commission, telephone 202–523–0493.

By order of the Commission.

Issued: March 12, 1981.

KENNETH R. MASON,
Secretary.

Investigation No. 731–TA–28 (Final)

MENTHOL FROM THE PEOPLE'S REPUBLIC OF CHINA

Notice of Change of Date of Public Hearing

Notice is hereby given that the hearing in this investigation will be held beginning at 10 a.m., e.d.t., Wednesday, May 5, 1981, in the Commission's Hearing Room, U.S. International Trade Commission Building, 701 E Street NW., Washington, D.C. 20436. A hearing date of April 13, 1981, had previously been announced in the Commission's notice of institution of the investigation as published in the Federal Register of January 28, 1981 (46 F.R. 9264). The Commission's hearing has been rescheduled as a result of the postponement by the U.S. Department of Commerce of its final determination as to the question of whether menthol from the People's Republic of China is being, or is likely to be, sold in the United States at less than fair value.

The Commission will prepare and place on the record by April 16, 1981, a staff report containing preliminary findings of fact, the public portion of which will be made available to interested persons. Requests to appear at the Commission's hearing should be filed in writing with the Secretary to the Commission not later than close of business (5:15 p.m., e.d.t.), April 23, 1981. All persons desiring to appear at the hearing and make oral presentations must file prehearing statements and should attend a prehearing conference to be held at 2 p.m., e.d.t., on April 24, 1981, in room 117 at the U.S. International Trade Commission Building. Prehearing statements must be filed on or before May 1, 1981. Testimony will be received separately at the hearing.

For further information concerning the conduct of the investigation, hearing procedures, and rules of general application, consult the Commission's Rules of Practice and Procedure, part 207, subpart C (19 CFR 207), and part 201, subparts A through E (19 CFR 201).

By order of the Commission.

Issued: March 12, 1981.

KENNETH R. MASON,
Secretary.

In the Matter of		
CERTAIN FOOD SLICERS AND COMPONENTS THEREOF	}	Investigation No. 337–TA–76

Notice of Extension of Time for Completion of Evidentiary Hearing

AGENCY: U.S. International Trade Commission.

ACTION: Extension of time for completion of evidentiary hearing.

SUMMARY: Having reviewed the record in this matter, including complainant's motion for extension of time (motion 76–14) and papers in support thereof, the Commission has granted complainant's motion and extended the time for conducting a hearing in the above-captioned investigation to April 30, 1981.

SUPPLEMENTARY INFORMATION: This investigation, pursuant to section 337 of the Tariff Act of 1930 (19 U.S.C. 1337), concerns alleged infringement of U.S. Letters Patent 3,766,817 by the importation and sale of certain food slicers.

Under Commission section 210.42(e)(1) of the Commission's Rules of Practice and Procedure, the time for conducting a hearing in this investigation expired on December 21, 1980. Complainant Prodyne Enterprises, Inc., moved on February 23, 1981 (motion 76–14, as amended) to extend the time for a hearing to April 30, 1981. The Commission has granted the motion and remanded the investigation to the Administrative Law Judge. The Commission also remanded motion 76–15 and motion 76–16 to the Administrative Law Judge for issuance of recommended determinations.

Any party wishing to petition for reconsideration of the Commission's action must do so within 14 days of service of the Commission's action and order. Such petitions must be in accord with section 210.56 of the Commission's rules (19 CFR 210.56).

Copies of the Commission action and order in this matter and any other public documents in this investigation are available for inspection during official working hours (8:45 a.m. to 5:15 p.m.) in the Office of the Secretary, U.S. International Trade Commission, 701 E Street NW., Washington, D.C. 20436, telephone 202–523–0161.

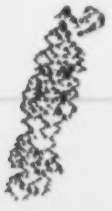

FOR FURTHER INFORMATION CONTACT: Warren H. Maruyama, Esq., Office of the General Counsel, U.S. International Trade Commission, 701 E Street NW., Washington, D.C. 20436; telephone 202–523–0143.

By order of the Commission.

Issued: March 13, 1981.

KENNETH R. MASON,
Secretary.

In the Matter of
CERTAIN FOOD SLICERS AND COMPONENTS THEREOF | Investigation No. 337–TA–76

Notice to All Parties

Notice is hereby given that a prehearing conference will be held in this investigation at 9 a.m. on March 30, 1981, in room 201, 1010 Wisconsin Avenue NW., Washington, D.C.

Notice is also given that the hearing in this proceeding will commence immediately following the prehearing conference.

The Secretary shall publish this notice in the Federal Register.

Issued: March 13, 1981.

JANET D. SAXON,
Administrative Law Judge.

Investigation No. 731–TA–39 (Preliminary)

TUBELESS-TIRE VALVES FROM THE FEDERAL REPUBLIC OF GERMANY

AGENCY: U.S. International Trade Commission.

ACTION: Termination of investigation and cancellation of public conference.

SUMMARY: On March 13, 1981, the Nylo-Flex Manufacturing Co., Mobile, Ala., notified the U.S. Department of Commerce that it was withdrawing its antidumping petition concerning tubeless-tire valves in accordance with Commerce's recommendation (Commerce found that the petition's treatment of nonconfidential summaries was inadequate). Nylo-Flex intends to refile its petition with adjustments requested by Commerce forthwith. Accordingly, the Commission terminates investigation No. 731–TA–39 (preliminary) pursuant to its authority under section 207.13 of the Commission's Rules of Practice and Procedure and cancels its conference scheduled for March 17, 1981, pending Nylo-Flex's resubmission.

EFFECTIVE DATE: March 13, 1981.

FOR FURTHER INFORMATION CONTACT: Mr. Larry Reavis, Office of Investigations, U.S. International Trade Commission; telephone 202–523–0296.

By order of the Commission.

Issued: March 13, 1981.

KENNETH R. MASON,
Secretary.

Notice of Investigation (332–124)

STUDY OF FLOATING EXCHANGE RATES AND U.S. COMPETITIVENESS

AGENCY: U.S. International Trade Commission.

ACTION: In accordance with the provisions of section 332 of the Tariff Act of 1930 (19 U.S.C. 1332), the Commission has instituted investigation No. 332–124 for the purpose of analyzing the effects of changes in the value of the dollar, vis-a-vis other currencies, on the international competitiveness of U.S. industries.

In conducting the investigation, the Commission will consider factors that determine the U.S. exchange rate and the effects of the exchange rate on U.S. trade. The study will consider such things as the business cycle, inflation, monetary and fiscal policies, and the pricing behavior of importers.

EFFECTIVE DATE: February 20, 1981.

FOR FURTHER INFORMATION CONTACT: Mr. Jerry Tempalski, Research Division, U.S. International Trade Commission, Washington, D.C. 20436; Phone 202–523–1515.

WRITTEN SUBMISSIONS: Since there will be no public hearing scheduled for this study, written submissions from interested parties are invited concerning any phase of the study. Commercial or financial information which a party desires the Commission to treat as confidential must be submitted on separate sheets of paper, each clearly marked "Confidential business information" at the top. All submissions requesting confidential treatment must conform with the requirements of section 201.6 of the Commission's Rules of Practice and Procedure (19 CFR 201.6). All written submissions, except for confidential business information, will be made available for inspection by interested persons. To be assured of consideration by the Commission in this study, written statements should be submitted at the earliest practicable date, but no later than July 31, 1981.

All submissions should be addressed to the Secretary at the Commission's office in Washington, D.C.

By order of the Commission.

Issued: March 17, 1981.

KENNETH R. MASON,
Secretray.

Investigation No. 701-TA-68 (Final)

LEATHER WEARING APPAREL FROM URUGUAY

AGENCY: U.S. International Trade Commission.

ACTION: Change in date of public hearing.

SUMMARY: The date of the public hearing to be held in connection with Commission investigation No. 701-TA-68 (Final), Leather Wearing Apparel From Uruguay, is changed from March 18, 1981, to March 26, 1981. The hearing will begin at 10 a.m., e.s.t., in the hearing room of the U.S. International Trade Commission Building, 701 E Street NW., Washington, D.C.

EFFECTIVE DATE: March 16, 1981.

FOR FURTHER INFORMATION CONTACT: Mr. Patrick Magrath, Office of Investigations, U.S. International Trade Commission; telephone 202-523-0283.

SUPPLEMENTARY INFORMATION: On February 27, 1981, the U.S. Department of Commerce and the Government of Uruguay signed an agreement regarding this investigation in which the Government of Uruguay agreed to eliminate completely the amount of the net subsidy found by Commerce to exist with respect to leather wearing apparel exported directly or indirectly to the United States. Accordingly, the countervailing duty investigations underway at Commerce and at the Commission will be suspended, pursuant to section 704(f)(1) of the Tariff Act of 1930 (19 U.S.C. 1671c(f)(1)). On March 11, 1981, however, the Government of Uruguay requested that the investigations be continued pursuant to section 704(g)(1) of the act (19 U.S.C. 1671c(g)(1)). The Commission has delayed its public hearing until March 26, 1981, to permit Federal Register publication of an anticipated continuation of the investigation by appropriate Department of Commerce notice.

By order of the Commission.

Issued: March 17, 1981.

KENNETH R. MASON,
Secretary.

Investigation No. 731–TA–30 (Final)

UNREFINED MONTAN WAX FROM EAST GERMANY

AGENCY: U.S. International Trade Commission.

ACTION: Institution of final antidumping investigation.

SUMMARY: As a result of an affirmative preliminary determination by the U.S. Department of Commerce that there is a reasonable basis to believe or suspect that exports of unrefined montan wax from East Germany are being, or are likely to be, sold in the United States at less than fair value (LTFV) within the meaning of section 731 of the Tariff Act of 1930 (19 U.S.C. 1673), the U.S. International Trade Commission hereby gives notice of the institution of investigation No. 731–TA–30 (final) to determine whether an industry in the United States is materially injured, or is threatened with material injury, or the establishment of an industry in the United States is materially retarded, by reason of imports of such merchandise. Unrefined montan wax is classifiable in item 494.20 of the Tariff Schedules of the United States. This investigation will be conducted according to the provisions of part 207, subpart C, of the Commission's Rules of Practice and Procedure (19 CFR 207, 44 F.R. 76457).

EFFECTIVE DATE: March 4, 1981.

FOR FURTHER INFORMATION CONTACT: Ms. Judith Case, Office of Investigations, U.S. International Trade Commission, Room 350, 701 E Street NW., Washington, D.C. 20436; telephone 202–523–0339.

SUPPLEMENTARY INFORMATION: On October 23, 1980, the Commission unanimously determined, on the basis of the information developed during the course of investigation No. 731–TA–30 (preliminary), that there was a reasonable indication that an industry in the United States was materially injured or threatened with material injury by reason of imports of unrefined montan wax from East Germany, which were allegedly being sold in the United States at LTFV. As a result of the Commission's affirmative preliminary determination, the Department of Commerce continued its investigation into the question of LTFV sales. Unless the investigation is extended, the final LTFV determination will be made by the Department of Commerce on or before May 18, 1981.

WRITTEN SUBMISSIONS: Any person may submit to the Commission a written statement of information pertinent to the subject of this investigation. A signed original and 19 true copies of each submission must be filed at the Office of the Secretary, U.S. International Trade Commission Building, 701 E Street NW., Washington,

D.C. 20436, on or before June 4, 1981. All written submissions, except for confidential business data, will be available for public inspection.

Any business information for which confidential treatment is desired shall be submitted separately. The envelope and all pages of such submissions must be clearly labeled "Confidential business information." Confidential submissions and requests for confidential treatment must conform with the requirements of section 201.6 of the Commission's Rules of Practice and Procedure (19 CFR 201.6).

A staff report containing preliminary findings of fact will be available to all interested parties on May 20, 1981.

PUBLIC HEARING: The Commission will hold a public hearing in connection with this investigation on June 8, 1981, in the hearing room of the U.S. International Trade Commission Building, beginning at 10 a.m., e.d.t. Requests to appear at the hearing should be filed in writing with the Secretary to the Commission not later than the close of business (5:15 p.m., e.d.t.) on May 18, 1981. All persons desiring to appear at the hearing and make oral presentations must file prehearing statements and should attend a prehearing conference to be held at 10 a.m., e.d.t., on May 21, 1981, in room 117 of the U.S. International Trade Commission Building. Prehearing statements must be filed on or before June 4, 1981.

Testimony at the public hearing is governed by section 207.23 of the Commission's Rules of Practice and Procedure (19 CFR 207.23). This rule requires that testimony be limited to a nonconfidential summary and analysis of material contained in prehearing statements and to new information. The Commission will not receive prepared testimony for the public hearing, as would otherwise be provided for by rule 201.12(d). All legal arguments, economic analyses, and factual materials relevant to the public hearing should be included in prehearing statements in accordance with rule 207.22. Posthearing briefs will also be accepted within a time specified at the hearing.

For further information concerning the conduct of the investigation, hearing procedures, and rules of general application, consult the Commission's Rules of Practice and Procedure, part 207, subparts A and C (19 CFR 207), and part 201, subparts A through E (19 CFR 201).

This notice is published pursuant to section 207.20 of the Commission's Rules of Practice and Procedure (19 CFR 207.20, 44 F.R. 76458).

By order of the Commission.

Issued: March 17, 1981.

KENNETH R. MASON,
Secretary

19 CFR 207.45

INVESTIGATIONS TO REVIEW OUTSTANDING ANTIDUMPING AND COUNTERVAILING DUTY DETERMINATIONS AND OUTSTANDING SUSPENSION AGREEMENTS

AGENCY: U.S. International Trade Commission.

ACTION: Final rule.

SUMMARY: Section 207.45 of the Commission's Rules of Practice and Procedure implements section 751 of the Tariff Act of 1930. This rule, as amended, sets forth procedures for the conduct of Commission investigations to review suspension agreements under sections 704 and 734 of the Tariff Act and determinations under sections 704(h)(2), 705(b), 734(h)(2), and 735(b) of the Tariff Act, under the Antidumping Act, 1921, and under the duty-free merchandise provisions of section 303(b) of the Tariff Act.

EFFECTIVE DATE: Publication in the Federal Register.

FOR FURTHER INFORMATION CONTACT: Edward Easton, Esq., Office of the General Counsel, U.S. International Trade Commission, 701 E Street NW., Washington, D.C. 20436, telephone 202–523–0379.

SUPPLEMENTARY INFORMATION: An analysis of comments on the proposed amendments to the rule follows.

On August 14, 1980, a notice of proposed rulemaking was published in the Federal Register (45 F.R. 54086) proposing to amend section 207.45 of title 19, chapter II, of the Code of Federal Regulations. The notice provided that comments concerning the proposed amendment were to be submitted on or before September 15, 1980. A submission was received from one interested person. That submission suggested that the Commission adopt procedures for publishing a notice in the Federal Register as soon as it receives a request to review an outstanding suspension agreement or an outstanding antidumping or countervailing duty determination and allow interested persons 30 days from the date of that publication in which to provide their views with regard to whether there are changed circumstances sufficient to warrant an investigation. This suggestion has been adopted. In the event that the Commission were to deny a petition on the basis that it failed to show sufficient changed circumstances any subsequent petition for a review investigation would also have the burden of showing changed circumstances.

Another difference between the final rule and the proposed rule concerns the modification of outstanding antidumping and counter-

vailing duty orders. The scope of section 207.45 as it was promulgated covered both the modification and revocation of outstanding orders. Given the possibility that an outstanding order may cover different merchandise in more than one market, the Commission can expect to receive requests for review investigations with a narrower product scope than the subject outstanding order. In such circumstances a request for modification of the coverage of the outstanding order would be more appropriate than a request to revoke it. The proposed rule published in the Federal Register of August 14, 1980, would have limited Commission action to the revocation of outstanding orders. The final rule covers both the revocation and modification situations.

The final rule contains a statement that in the case of an evenly divided vote as to whether a Commission determination should be affirmative or negative, the outstanding agreement or order shall remain unaffected. The final rule contains a reference to antidumping orders issued under the Antidumping Act, 1921, repealed January 1, 1980. The language in that act referred to findings, not orders. The term order is used in the antidumping provisions of title VII of the Tariff Act. The purpose of this reference to orders in the amended rule is to indicate that it considers these terms to be equivalent and that the Commission intends to continue to exercise review authority over the determinations issued under the Antidumping Act, 1921.

The amended rule 207.45 reads as follows:

Investigation to review outstanding determination

(a) *Purpose.*—Upon the receipt of information concerning, or upon a request for a review of, a determination concerning a suspension agreement accepted under section 704 or 734 of the act or an affirmative determination made under section 704(h)(2), 705(b), 734(h)(2), or 735(b) of the act, or a determination which resulted in an order issued under the Antidumping Act, 1921, or section 303(b) of the act, which shows changed circumstances sufficient to warrant a review of such determination, the Commission shall institute an investigation to determine, as the case may be, (1) whether, in light of the changed circumstances, the agreement continues to completely eliminate the injurious effect of imports of the merchandise; or (2) whether an industry in the United States would be materially injured, or would be threatened with material injury, or the establishment of an industry in the United States would be materially retarded, by reason of imports of the merchandise covered by the countervailing duty order or the antidumping order if the order were to be modified or revoked. In the case of an evenly divided vote as to whether a Commission determination should be affirmative or negative, the outstanding agreement or order shall remain unaffected. In the absence of good cause shown, no investigation under this section shall be instituted within 24 months of the date of publication of the notice of the suspension or determination.

(b) *Procedures.*

(1) *Commencement of proceedings.*

(i) *Upon receipt of a request.*—A proceeding is commenced upon the filing with the Commission of the original and 19 true copies of a request. Requests for a review investigation may be filed by any person. All requests shall set forth a description of changed circumstances sufficient to warrant the institution of a review investigation by the Commission under this section.

(ii) *Upon the initiative of the Commission.*—Upon receipt of information concerning a suspension agreement accepted under section 704 or 734 of the act or an affirmative determination made under 704(h)(2), 705(b), 734(h)(2), or 735(b) of the act, or a determination which resulted in an order issued under the Antidumping Act, 1921, or section 303(b) of the act, which shows changed circumstances sufficient to warrant a review of such determination, the Commission shall initiate an investigation to review such determination.

(2) *Notice of receipt of a request.*—Upon the receipt of a properly filed request for a review investigation, the Commission shall publish a notice of having received such a request in the Federal Register inviting public comment on the question of whether the Commission should institute a review investigation. Interested persons shall have at least 30 days from the date of publication in the Federal Register within which to submit comments to the Commission.

(3) *Institution of an investigation.*—Within 30 days after the close of the period for public comments following publication of the receipt of a request, the Commission shall determine whether the request shows changed circumstances sufficient to warrant a review and, if so, shall institute an investigation. The investigation instituted by notice published in the Federal Register and shall be completed within 120 days of the date of such publication. If the Commission determines that a request does not show changed circumstances sufficient to warrant a review, the request will be dismissed and a notice of the dismissal published in the Federal Register stating the reasons therefor.

(4) *Procedures set forth in subpart C of part 207.*—The procedures set forth in sections 207.21 through 207.24 and section 207.28 of this part shall apply to all investigations instituted under this section.

By order of the Commission.

Issued: March 19, 1981.

KENNETH R. MASON,
Secretary.

Index

U.S. Customs Service

	T.D. No.
Treasury decisions:	
Deep Seabed Hard Mineral Resources Act	81-59
Foreign currencies:	
Rates which varied from quarterly rates; March 9-13, 1981	81-61
Daily certified rates; March 9-13, 1981	81-62
Importation and exportation of coffee under the International Coffee Agreement of 1976	81-58
Instruments of International Traffic, steel cores and fabric separators	81-60
Decisions of the U.S. Court of Customs and Patent Appeals *Krupp International, Inc. and Fried. Krupp GmbH* v. *U.S. International Trade Commission and Southwire Co*	Appeals No. 80-19

DEPARTMENT OF THE TREASURY
U.S. CUSTOMS SERVICE
WASHINGTON, D.C. 20229

OFFICIAL BUSINESS
PENALTY FOR PRIVATE USE, $300

POSTAGE AND FEES PAID
DEPARTMENT OF THE TREASURY (CUSTOMS)
(TREAS. 552)

U.S. GOVERNMENT PRINTING OFFICE : 1981 O - 338-816

15/15

Customs Bulletin

Regulations, Rulings, Decisions, and Notices concerning Customs and related matters

and Decisions

of the United States Court of Customs and Patent Appeals and the United States Court of International Trade

Vol. 15 APRIL 15, 1981 No. 15

NEWARK PUBLIC LIBRARY

APR 29 1981

U. S. GOVT. PUBS.
DEPOSITORY 376

This issue contains

T.D. 81-63 through 81-76
Erratum
Slip Op. 81-25 through 81-27
Protest Abstracts P81/36 through P81/38
Reap. Abstracts R81/97 through R81/115
International Trade Commission Notice

THE DEPARTMENT OF THE TREASURY
U.S. Customs Service

T 1.11/3:

NOTICE

The abstracts, rulings, and notices which are issued weekly by the U.S. Customs Service are subject to correction for typographical or other printing errors. Users may notify the U.S. Customs Service, Logistics Management Division, Washington, D.C. 20229, of any such errors in order that corrections may be made before the bound volumes are published.

For sale by the Superintendent of Documents, U.S. Government Printing Office, Washington, D.C. 20402. Price: $2.25 (single copy domestic); $2.85 (single copy foreign). Subscription price: $85.00 a year domestic; $106.25 a year foreign.

best copy available

U.S. Customs Service

Treasury Decisions

(T.D. 81–63)

Feather-Filled Jackets, Coats, and Vests—Restriction on Entry

Restriction on entry of feather-filled jackets, coats, and vests manufactured or produced in Taiwan

There are published below directives of October 24, 1980, received by the Commissioner of Customs from the acting chairman, Committee for the Implementation of Textile Agreements, concerning an import quota level and visa requirements on feather-filled jackets, coats, and vests in TSUSA Nos. 748.4042, 748.4044, 748.4054, and 748.4062 manufactured or produced in Taiwan. These directives amend, but do not cancel, that committee's directives of September 21, 1972, and December 21, 1979 (T.D.'s 72–280 and 80–66).

These directives were published in the Federal Register on November 3, 1980 (45 F.R. 72731), by the committee.

(QUO–2–1)

Dated: March 30, 1981.

WILLIAM D. SLYNE,
(For Richard R. Rosettie, Acting
Director, Duty Assessment Division).

U.S. DEPARTMENT OF COMMERCE,
INTERNATIONAL TRADE ADMINISTRATION,
Washington, D.C. October 24, 1980.

Committee for the Implementation of Textile Agreements

COMMISSIONER OF CUSTOMS,
Department of the Treasury,
Washington, D.C.

DEAR MR. COMMISSIONER: This directive further amends, but does not cancel, the directive of December 21, 1979, from the chairman,

Committee for the Implementation of Textile Agreement, concerning imports into the United States of certain cotton, wool, and manmade fiber textile products, produced or manufactured in Taiwan.

Under the terms of the Arrangement Regarding International Trade in Textiles done at Geneva on December 20, 1973, as extended on December 15, 1977; pursuant to the Bilateral Cotton, Wool and Man-Made Fiber Textile Agreement of June 8, 1978, as amended, concerning cotton, wool, and manmade fiber textile products from Taiwan; and in accordance with the provisions of Executive Order 11651 of March 3, 1972, as amended by Executive Order 11951 of January 6, 1977, you are directed to prohibit, effective on November 7, 1980, and for the 12-month period beginning on January 1, 1980, and extending through December 31, 1980, entry into the United States for consumption and withdrawal from warehouse for consumption of feather-filled jackets, coats, and vests in TSUSA Nos. 748.4042, 748.4044, 748.4054, and 748.4062, produced or manufactured in Taiwan, in excess of 200,914 dozen.[1]

The foregoing feather-filled textile products which have been exported to the United States prior to January 1, 1980, shall not be subject to this directive.

Further, such products which have been released from the custody of the U.S. Customs Service under the provisions of 19 U.S.C. 1448(b) or 1484(a)(1)(A) prior to the effective date of this directive shall not be denied entry under this directive.

In carrying out the above directions, the Commissioner of Customs should construe entry into the United States for consumption to include entry for consumption into the Commonwealth of Puerto Rico.

The action takens with respect to the authorities in Taiwan and with respect to feather-filled jackets, coats, and vests in TSUSA Nos. 748.4042, 748.4044, 748.4054, and 748.4062 from Taiwan have been determined by the Committee for the Implementation of Textile Agreements to involve foreign affairs functions of the United States. Therefore, these directions to the Commissioner of Customs, which are necessary for the implementation of such actions, fall within the foreign affairs exception to the rulemaking provisions of 5 U.S.C. 553. This letter will be published in the Federal Register.

Sincerely,

EDWARD GOTTFRIED,
Acting Chairman, Committee for the Implementation of Textile Agreements.

---

[1] The level of restraint has not been adjusted to reflect any imports after Dec. 31, 1979. Imports in the designated TSUSA numbers have amounted to 122,607 dozens during the January-August period of 1980.

(T.D. 81-64)

Manmade Fiber Textile Products—Restriction on Entry

Restriction on entry of manmade fiber textile products manufactured or produced in Costa Rica

There is published below a directive of October 28, 1980, received by the Commissioner of Customs from the chairman, Committee for the Implementation of Textile Agreements, concerning restriction on entry of manmade fiber textile products in category 649 manufactured or produced in Costa Rica.

This directive was published in the Federal Register on November 28, 1980 (45 F.R. 79136), by the committee.

(QUO-2-1)

Dated: March 30, 1981.

WILLIAM D. SLYNE,
(For Richard R. Rosettie, Acting
Director, Duty Assessment Division).

U.S. DEPARTMENT OF COMMERCE,
INTERNATIONAL TRADE ADMINISTRATION,
Washington, D.C., October 28, 1980.

Committee for the Implementation of Textile Agreements

COMMISSIONER OF CUSTOMS,
Department of the Treasury,
Washington, D.C.

DEAR MR. COMMISSIONER: Pursuant to the Bilateral Cotton, Wool and Man-Made Fiber Textile Agreement of September 22, 1980, between the Governments of the United States and Costa Rica, and in accordance with the provisions of Executive Order 11651 of March 3, 1972, as amended by Executive Order 11961 of January 6, 1977, you are directed to prohibit, effective on November 4, 1980, and for the 12-month period beginning on January 1, 1980, and extending through December 31, 1980, entry into the United States for consumption and withdrawal from warehouse for consumption of manmade fiber textile products in category 649 in excess of 1,575,000 dozen.[1]

In carrying out this directive, entries of manmade fiber textile products in category 649 produced or manufactured in Costa Rica, that have been exported to the United States before January 1, 1980, shall not be subject to this directive.

---

[1] The level of restraint has not been adjusted to reflect any entries after Dec. 31, 1979. Imports during the January 1980 through August 1980 period have amounted to 895,811 dozen.

Manmade fiber textile products in category 649 that have been released from the custody of the U.S. Customs Service under the provisions of 19 U.S.C. 1448(b) or 1484(a)(1)(A) prior to the effective date of this directive shall not be denied entry under this directive.

The levels set forth above are subject to adjustment in the future according to the provisions of the bilateral agreement of September 22, 1980, between the Governments of the United States and Costa Rica which provide, in part, that: (1) The specific limit may be increased for carryover and carryforward up to 11 percent of the applicable category limit or sublimit; and (2) administrative arrangements or adjustments may be made to resolve minor problems arising in the implementation of the agreement. Any appropriate adjustments under the provisions of the bilateral agreement, referred to above, will be made to you by letter.

A detailed description of the textile categories in terms of TSUSA numbers was published in the Federal Register on February 28, 1980 (45 F.R. 13172), as amended on April 23, 1980 (45 F.R. 27463), and August 12, 1980 (45 F.R. 53506).

In carrying out the above directions, the Commissioner of Customs should construe entry into the United States for consumption to include entry for consumption into the Commonwealth of Puerto Rico.

The actions taken with respect to the Government of Costa Rica and with respect to imports of manmade fiber textile products from Costa Rica have been determined by the Committee for the Implementation of Textile Agreements to involve foreign affairs functions of the United States. Therefore, these directions to the Commissioner of Customs, which are necessary for the implementation of such actions, fall within the foreign affairs exception to the rulemaking provisions of 5 U.S.C. 553. This letter will be published in the Federal Register.

Sincerely,

PAUL T. O'DAY,
Chairman, Committee for the Implementation of Textile Agreements.

(T.D. 81-65)

Cotton, Wool, and Manmade Fiber Textile Products—Restriction on Entry

Restriction on entry of cotton, wool, and manmade fiber textile products manufactured or produced in Singapore

There is published below a directive of October 24, 1980, received by the Commissioner of Customs from the acting chairman, Committee for the Implementation of Textile Agreements, concerning visa

requirements on entry of cotton, wool, and manmade fiber apparel products in certain categories manufactured or produced in Singapore.

This directive was published in the Federal Register on October 28, 1980 (45 F.R. 71409), by the committee.

(QUO-2-1)

Dated: March 30, 1981.

WILLIAM D. SLYNE
(For Richard R. Rosettie, Acting
Director, Duty Assessment Division).

U.S. DEPARTMENT OF COMMERCE,
INTERNATIONAL TRADE ADMINISTRATION,
Washington, D.C., October 24, 1980.

Committee for the Implementation of Textile Agreements

COMMISSIONER OF CUSTOMS,
Department of the Treasury,
Washington, D.C.

DEAR MR. COMMISSIONER: Under the terms of the Arrangement Regarding International Trade in Textiles done at Geneva on December 20, 1973, as extended on December 15, 1977; pursuant to the Bilateral Cotton, Wool and Man-Made Fiber Textile Agreement of September 21 and 22, 1978, as amended, between the Governments of the United States and the Republic of Singapore; and in accord-, ance with the provisions of Executive Order 11651 of March 3, 1972, as amended by Executive Order 11951 of Januray 6, 1977, you are directed to prohibit, effective on November 5, 1980, and until further notice, entry into the United States for consumption and withdrawal from warehouse for consumption of cotton, wool, and manmade fiber apparel products in categories 330–359, 431–459, and 630–659, produced or manufactured in the Republic of Singapore, regardless of the date of export, for which the Government of the Republic of Singapore has not issued an appropriate export visa, fully described below.

The export visa will be an original circular stamp in blue ink on the front of the invoice (Special Customs Invoice Form 5515, successor document, or commercial invoice, when that form is used) and will be signed by an authorized official of the Government of the Republic of Singapore. A facsimile of the visa stamp is enclosed.

Merchandise for the personal use of the importer and not for resale does not require a visa, regardless of value.

You are further directed to permit entry into the United States for consumption and withdrawal from warehouse for consumption of

designated shipments of cotton, wool, and/or manmade fiber apparel products, produced or manufactured in the Republic of Singapore, notwithstanding the designated shipment or shipments do not fulfill the aforementioned visa requirements, whenever requested to do so in writing by the chairman of the Committee for the Implementation of Textile Agreements (CITA).

Beginning November 5 and ending December 31, 1980, all visa waivers will be authorized by the Committee for the Implementation of Textile Agreements (CITA). The waiver will be forwarded to the importer who will present it to the appropriate Customs port for inclusion as part of his entry documentation. Enclosed is a facsimile of the visa waiver that will be used, including the validating stamp of the Committee for the Implementation of Textile Agreements (CITA). Only the original stamp in blue ink, signed by an authorized official of the Committee for the Implementation of Textile Agreements, will be accepted.

A detailed description of the textile categories in terms of TSUSA numbers was published in the Federal Register on February 28, 1980 (45 F.R. 13172), as amended on April 23, 1980 (45 F.R. 27463), and August 12, 1980 (45 F.R. 53506).

In carrying out the above directions the Commissioner of Customs shall construe entry into the United States for consumption to include entry for consumption into the Commonwealth of Puerto Rico.

The action taken with respect to the Government of the Republic of Singapore and with respect to imports of cotton, wool, and manmade fiber apparel products from Singapore has been determined by the Committee for the Implementation of Textile Agreements to involve foreign affairs functions of the United States. Therefore, these directions to the Commissioner of Customs, which are necessary for the implementation of such actions, fall within the foreign affairs exception to the rulemaking provisions of 5 U.S.C. 553. This letter will be published in the Federal Register.

Sincerely,

EDWARD GOTTFRIED,
Acting Chairman, Committee for the Implementation of Textile Agreements.

(T.D. 81-66)

Cotton and Manmade Fiber Textile Products—Restriction on Entry

Restriction on entry of cotton and manmade fiber textile products manufactured or produced in Taiwan

There is published below a directive of August 28, 1980, received by the Commissioner of Customs from the chairman, Committee for the

Implementation of Textile Agreements, concerning restriction on entry of cotton and manmade fiber textile products in certain categories manufactured or produced in Taiwan. This directive amends, but does not cancel, that committee's directive of December 21, 1979 (T.D. 80-66).

This directive was published in the Federal Register on September 3, 1980 (45 F.R. 58389), by the committee.

(QUO-2-1)

Dated: March 30, 1981.

WILLIAM D. SLYNE,
(For Richard R. Rosettie, Acting
Director, Duty Assessment Division).

U.S. DEPARTMENT OF COMMERCE,
INTERNATIONAL TRADE ADMINISTRATION,
Washington, D.C., August 28, 1980.

Committee for the Implementation of Textile Agreements

COMMISSIONER OF CUSTOMS,
Department of the Treasury,
Washington, D.C.

DEAR MR. COMMISSIONER: On December 21, 1979, the chairman, Committee for the Implementation of Textile Agreements, directed you to prohibit entry for consumption, or withdrawal from warehouse for consumption, of cotton, wool, and manmade fiber textile products in certain specific categories, produced or manufactured in Taiwan and exported to the United States during the agreement year which began on January 1, 1980, in excess of designated levels of restraint. The chairman further advised you that the levels of restraint are subject to adjustment.[1]

Under the terms of the arrangement regarding international trade in textiles done at Geneva on December 20, 1973, as extended on December 15, 1977; pursuant to the Bilateral Cotton, Wool and Man-Made Fiber Textile Agreement of June 8, 1978, as amended, concerning cotton, wool, and manmade fiber textile products exported from Taiwan; and in accordance with the provisions of Executive Order 11651 of March 3, 1972, as amended by Executive Order 11951 of January 6, 1977, you are directed to amend, effective on

[1] The term "adjustment" refers to those provisions of the Bilateral Cotton, Wool and Man-Made Fiber Textile Agreement of June 8, 1978, as amended, concerning cotton, wool, and manmade fiber textile products from Taiwan which provide, in part, that: (1) Within the aggregate and group limits, specific ceilings may be exceeded by designated percentages; (2) these same levels may be increased for carryforward; and (3) administrative arrangements or adjustments may be made to resolve minor problems arising in the implementation of the agreement.

338-818 O - 81 - 2

September 3, 1980, the levels of restraint established in the directive of December 21, 1979, for categories 338/339, 638, and 639 to the following:

Category	*Amended 12-month level of restraint* [1]
338/339	539,567 dozen
638	1,499,589 dozen
639	5,003,879 dozen

The actions taken with respect to Taiwan, and with respect to imports of cotton and manmade fiber textile products from Taiwan have been determined by the Committee for the Implementation of Textile Agreements to involve foreign affairs functions of the United States. Therefore, these directions to the Commissioner of Customs, which are necessary to the implementation of such actions, fall within the foreign affairs exception to the rulemaking provisions of 5 U.S.C. 553. This letter will be published in the Federal Register.

Sincerely,

PAUL T. O'DAY,
Chairman, Committee for the Implementation of Textile Agreements.

(T.D. 81-67)

Cotton, Wool, and Manmade Fiber Textile Products—Restriction on Entry

Restriction on entry of cotton, wool, and manmade fiber textile products manufactured or produced in Singapore

There is published below a directive of December 16, 1980, received by the Commissioner of Customs from the chairman, Committee for the Implementation of Textile Agreements, concerning restrictions on entry of cotton, wool, and manmade fiber textile products in certain categories manufactured or produced in Singapore.

This directive was published in the Federal Register on December 19, 1980 (45 F.R. 83649), by the committee.

(QUO-2-1)

Dated: March 30, 1981.

WILLIAM D. SLYNE,
(For Richard R. Rosettie, Acting Director, Duty Assessment Division).

---

[1] The levels of restraint have not been adjusted to reflect any imports after Dec. 31, 1979.

U.S. DEPARTMENT OF COMMERCE,
INTERNATIONAL TRADE ADMINISTRATION,
Washington, D.C., December 16, 1980.

Committee for the Implementation of Textile Agreements

COMMISSIONER OF CUSTOMS,
Department of the Treasury,
Washington, D.C.

DEAR MR. COMMISSIONER: Under the terms of the Arrangement Regarding International Trade in Textiles done at Geneva on December 20, 1973, as extended on December 15, 1977; pursuant to the Bilateral Cotton, Wool and Man-Made Fiber Textile Agreement of September 21 and 22, 1978, as amended, between the Governments of the United States and the Republic of Singapore; and in accordance with the provisions of Executive Order 11651 of March 3, 1972, as amended by Executive Order 11951 of January 6, 1977, you are directed to prohibit, effective on January 1, 1981, and for the 12-month period extending through December 31, 1981, entry into the United States for consumption and withdrawal from warehouse for consumption of cotton, wool, and manmade fiber textile products in the following categories, produced or manufactured in Singapore, in excess of the indicated 12-month levels of restraint:

Category	*12-month level of restraint*	
317	8,000,000	square yards
331	221,429	dozen pairs
340	405,169	dozen
333/334/335	173,644	dozen of which not more than 9,985 dozen shall be in category 333; not more than 52,718 dozen shall be in category 334; and not more than 136,988 dozen shall be in category 335
341	48,276	dozen
347/348	451,738	dozen of which not more than 498,502 dozen shall be in category 347 and not more than 225,013 dozen shall be in category 348
445/446	20,000	dozen
604	700,000	pounds
638/639	2,972,217	dozen of which not more than 371,527 dozen shall be in category 638
641	77,276	dozen

In carrying out this directive, entries of cotton, wool, and manmade fiber textile products in the foregoing categories, produced or manufactured in the Republic of Singapore, which have been exported to the United States on and after January 1, 1980, and extending through December 31, 1980, shall, to the extent of any unfilled balances, be charged against the levels of restraint established for such goods during the 12-month period beginning on January 1, 1980, and extending through December 31, 1980. In the event the levels of restraint established for that period have been exhausted by previous entries, such goods shall be subject to the levels set forth in this letter.

The levels set forth above are subject to adjustment in the future according to those provisions of the bilateral agreement of September 21 and 22, 1978, as amended, between the Governments of the United States and the Republic of Singapore, which provide, in part, that: (1) Within the aggregate and applicable group limits, specific limits, and sublimits, may be exceeded by designated percentages; (2) specific levels may be increased for carryover and carryforward up to 11 percent of the applicable category limit; and (3) administrative arrangements for adjustments may be made to resolve problems arising in the implementation of the agreement. Any appropriate adjustments under the provision of the bilateral agreement, referred to above, will be made to you by letter.

A detailed description of the textile categories in terms of TSUSA numbers was published in the Federal Register on February 28, 1980 (45 F.R. 17172), as amended on April 23, 1980 (45 F.R. 27463), and August 12, 1980 (45 F.R. 53506).

In carrying out the above directions, the Commissioner of Customs should construe entry into the United States for consumption to include entry for consumption into the Commonwealth of Puerto Rico.

The actions taken with respect to the Government of the Republic of Singapore and with respect to imports of cotton, wool, and manmade fiber textile products from Singapore have been determined by the Committee for the Implementation of Textile Agreements to involve foreign affairs functions of the United States. Therefore, these directions to the Commissioner of Customs, which are necessary for the implementation of such actions, fall within the foreign affairs exception to the rulemaking provisions of 5 U.S.C. 553. This letter will be published in the Federal Register.

Sincerely,

PAUL T. O'DAY,
Chairman, Committee for the
Implementation of Textile Agreements.

(T.D. 81-68)

Cotton and Manmade Fiber Textile Products—Restriction on Entry

Restriction on entry of cotton and manmade fiber textile products manufactured or produced in the People's Republic of China

There is published below a directive of November 28, 1980, received by the Commissioner of Customs from the chairman, Committee for the Implementation of Textile Agreements, concerning restriction on entry of cotton and manmade fiber textile products in certain categories manufactured or produced in the People's Republic of China.

This directive was published in the Federal Register on December 4, 1980 (45 F.R. 80324), by the committee.

(QUO-2-1)

Dated: March 30, 1981.

WILLIAM D. SLYNE,
(For Richard R. Rosettie, Acting
Director, Duty Assessment Division).

U.S. DEPARTMENT OF COMMERCE,
INTERNATIONAL TRADE ADMINISTRATION,
Washington, D.C., November 28, 1980.

Committee for the Implementation of Textile Agreements

COMMISSIONER OF CUSTOMS,
Department of the Treasury,
Washington, D.C.

DEAR MR. COMMISSIONER: Under the terms of the Bilateral Cotton, Wool and Man-Made Fiber Textile Agreement of September 17, 1980, between the Governments of the United States and the People's Republic of China, and in accordance with the provisions of Executive Order 11651 of March 3, 1972, as amended by Executive Order 11951 of January 6, 1977, you are directed to prohibit, effective on January 1, 1981, and for the 12-month period extending through December 31, 1981, entry into the United States for consumption and withdrawal from warehouse for consumption, of cotton and manmade fiber textile products in categories 331, 339, 340, 341, 347/348, and 645/646 in excess of the following levels of restraint:

Category	*12-month level of restraint*	
331	3,310,008	dozen pairs
339	912,000	dozen
340	561,600	dozen

Category	*12-month level of restraint*
341	445, 100 dozen
347/348	1, 824, 000 dozen
645/646	566, 500 dozen

In carrying out this directive entries of textile products in the foregoing categories which have been exported to the United States prior to January 1, 1981, shall, to the extent of any unfilled balances, be charged against the levels of restraint established for such goods during the 12-month period beginning on January 1, 1980, and extending through December 31, 1980. In the event that the levels of restraint established for that period have been exhausted by previous entries, such goods shall be subject to the levels set forth in this letter.

The levels set forth above are subject to adjustment in the future according to the provisions of the bilateral agreement of September 17, 1980, between the Governments of the United States and the People's Republic of China, which provide, in part, that: (1) Specific limits may be exceeded by designated percentages in any agreement year; (2) specific limits may be increased for carryover and carryforward up to 11 percent of the applicable category limit; and (3) administrative arrangements or adjustments may be made to resolve minor problems arising in the implementation of the agreement. Any appropriate adjustments under the provisions of the bilateral agreement, referred to above, will be made to you by letter.

A detailed description of the textile categories in terms of TSUSA numbers was published in the Federal Register on February 28, 1980 (45 F.R. 13172), as amended on April 23, 1980 (45 F.R. 27463), and August 12, 1980 (45 F.R. 53506).

In carrying out the above directions, the Commissioner of Customs should construe entry into the United States for consumption to include entry for consumption into the Commonwealth of Puerto Rico.

The actions taken with respect to the Government of the People's Republic of China and with respect to imports of cotton and manmade fiber textile products from China have been determined by the Committee for the Implementation of Textile Agreements to involve foreign affairs functions of the United States. Therefore, these directions to the Commissioner of Customs, which are necessary for the implementation of such actions, fall within the foreign affairs exception to the rulemaking provisions of 5 U.S.C. 553. This letter will be published in the Federal Register.

Sincerely,

PAUL T. O'DAY,
Chairman, Committee for the
Implementation of Textile Agreements.

(T.D. 81-69)

High-Security Storage of Certain Imported Firearms

AGENCY: U.S. Customs Service, Department of the Treasury.

ACTION: General notice.

SUMMARY: This notice advises the public that pursuant to an agreement between Customs and the Bureau of Alcohol, Tobacco and Firearms (ATF), conditional import permits for certain firearms will be granted by ATF only after Customs has certified the security of the facility in which those firearms will be stored before their controlled transfer in accordance with strict Customs and ATF requirements.

This policy has been implemented to protect the public from possible harm resulting from the theft of certain firearms from Customs bonded warehouses and foreign-trade zones.

The manual supplement describing this policy and Customs internal implementing procedures is available from district directors of Customs.

FOR FURTHER INFORMATION CONTACT: John R. Holl, Cargo Processing Division, Office of Inspection, U.S. Customs Service, 1301 Constitution Avenue NW., Washington, D.C.; 202-566-5354.

SUPPLEMENTARY INFORMATION:

BACKGROUND

The minimum physical security requirements of Customs bonded warehouses and foreign-trade zones are provided in the regulations of the Customs Service (19 CFR part 19) and the Foreign-Trade Zones Board, Department of Commerce (15 CFR part 400). These requirements were strengthened by internal administrative actions required to assure that these facilities also meet Customs standards for the security of international cargo recommended in T.D. 72-56, published in the Federal Register on February 16, 1972 (37 F.R. 3455).

The National Firearms Act (NFA), as amended by title II of the Gun Control Act of 1968 (26 U.S.C. 5801 et seq.), specifically in 26 U.S.C. 5844 and 5845, provides that NFA (title II) firearms (e.g., machineguns, destructive devices, and certain other firearms) may be imported or brought into the United States only for the use of Federal, State, and local governments; for scientific and research purposes; for testing or use as a model by a registered manufacturer; or as a registered importer's or registered dealer's sample. Their importation is authorized by the Bureau of Alcohol, Tobacco and

Firearms (ATF) only through conditional import permits that specify their intended use. The kinds of firearms and weapons whose importation is so restricted are described as a "firearm" in 26 U.S.C. 5845(a) and the ATF regulations set forth in 27 CFR 179.11.

The theft of title II firearms and their use for criminal or terrorist purposes present a clear threat to public safety and order. Existing Customs bonds and the physical security provisions of 19 CFR part 19 and 15 CFR part 400 are not adequate to indemnify or protect the public against this type of harm. Rather than rely on money damages paid to the Government or security standards designed to guard ordinary imported merchandise, Customs and ATF have determined that special security measures are necessary to prevent the theft of the title II firearms.

HIGH SECURITY FIREARMS POLICY

A joint Customs/ATF pilot program was initiated on an informal basis in 1975 to grant conditional import permits for title II firearms only after Customs had certified the security of the storage facility. That pilot program was implemented successfully and is continuing to date. Customs, with ATF concurrence, has determined to formalize the pilot program, and by Manual Supplement 3200–03, dated February 6, 1980, issued an internal directive to Customs field personnel to implement that policy formally. As a result of the agreement between Customs and ATF, conditional import permits for entry for warehouse, or admission to foreign-trade zones, and subsequent storage of these weapons, will not be granted by ATF unless Customs has certified that the storage facility meets security standards appropriate for the protection from theft of this category of weapons.

Manual Supplement 3200–03, which describes this policy and Customs internal implementing procedures, is available to the public upon request from any district director of Customs. The cities in which Customs district offices are located appear in 19 CFR part 101.

DRAFTING INFORMATION

The principal author of this document was Todd J. Schneider, Regulations and Information Division, Office of Regulations and Rulings. However, personnel from other Customs offices participated in its development.

Dated: March 17, 1981.

WILLIAM T. ARCHEY,
Acting Commissioner of Customs

[Published in the Federal Register, April 3, 1981 (46 F.R. 20358)]

(T.D. 81-70)

Customhouse Broker's License—Stay of Revocation

Stay of revocation of customhouse broker's license 3605

Pursuant to order of the court in *James A. Barnhart* v. *United States Treasury Department*, U.S. Court of International Trade, No. 81-3-00328, and section 641, Tariff Act of 1930, as amended (19 U.S.C. 1641(b)), and part 111 of the Customs Regulations, as amended (19 CFR 111.75, 111.77), notice is hereby given that the revocation of customhouse broker's license No. 3605 of James A. Barnhart, Los Angeles, Calif., is stayed.

WILLIAM T. ARCHEY,
Acting Commissioner of Customs.

[Published in the Federal Register April 6, 1981 (46 F.R. 20658)]

(T.D. 81-71)

Special Tonnage Tax and Light Money—Customs Regulations Amended

Foreign discriminating duties of tonnage and impost with respect to vessels of and certain imports from the United Arab Emirates, suspended and discontinued, section 4.22, Customs Regulations, amended

TITLE 19—CUSTOMS DUTIES

CHAPTER I—U.S. CUSTOMS SERVICE

PART 4—VESSELS IN FOREIGN AND DOMESTIC TRADES

AGENCY: U.S. Customs Service, Department of the Treasury.

ACTION: Final rule.

SUMMARY: This rule amends the Customs Regulations by adding the names of the States that comprise the United Arab Emirates (U.A.E.) (Abu Dhabi, Ajman, Dubai, Fujairah, Ras Al Khaimah, Sharjah, and Umm Al Qaiwain) to the list of nations whose vessels are exempted from the payment of higher tonnage duties than are applicable to vessels of the United States and from the payment of light money. Satisfactory evidence has been furnished by the Department of State that no discriminating duties of tonnage or impost are imposed in ports of U.A.E. upon vessels belonging to citizens of the United States or on their cargoes. The names of the member States of the

338-818 O - 81 - 3

U.A.E. are being added to aid Customs officers in identifying vessels of the U.A.E. which operate with documents issued by and bearing the name of the member States of the U.A.E. rather than the U.A.E. itself.

EFFECTIVE DATE: The exemption became effective October 25, 1975.

FOR FURTHER INFORMATION CONTACT: Michael K. Tomenga, Carriers, Drawback and Bonds Division, U.S. Customs Service, 1301 Constitution Avenue NW., Washington D.C. 20229; 202–566–5706.

SUPPLEMENTARY INFORMATION:

BACKGROUND

Generally, the United States imposes regular and special tonnage taxes, and a duty of a specified amount per ton, known as light money, on all foreign vessels which enter U.S. ports (46 U.S.C. 121, 128). However, vessels of a foreign nation may be exempted from the payment of special tonnage taxes and light money upon presentation of proof satisfactory to the President that no discriminatory duties of tonnage or imposts are imposed by that foreign nation on U.S. vessels or their cargoes (46 U.S.C. 141). The President has delegated the authority to grant this exemption to the Secretary of the Treasury. Section 4.22, Customs Regulations (19 CFR 4.22), lists those nations whose vessels have been exempted from the payment of any higher tonnage duties than are applicable to vessels of the United States and from the payment of light money.

On October 26, 1977, the Department of State advised the Department of the Treasury that satisfactory evidence had been obtained from the Government of the U.A.E. that no discriminating duties of tonnage or impost are imposed or levied in ports of that country upon vessels wholly belonging to citizens of the United States, or upon the produce, manufactures, or merchandise imported into that country on U.S. vessels.

In its communication, the Department of State advised that no discriminating duties of tonnage or impost were imposed or levied upon vessels wholly belonging to citizens of the United States, or upon the produce, manufactures, or merchandise imported into ports of the U.A.E. from October 25, 1975.

DECLARATION

Therefore, by virtue of the authority vested in the President by section 4228 of the Revised Statutes, as amended (46 U.S.C. 141), and delegated to the Secretary of the Treasury by Executive Order No.

10289, September 17, 1951, as amended by Executive Order No. 10882, July 18, 1960 (3 CFR, 1959–63 comp., ch. II), and pursuant to the authorization provided by Treasury Department Order No. 101–5 (44 F.R. 31057), the Assistant Secretary of the Treasury declared that the foreign discriminating duties of tonnage and impost within the United States are suspended and discontinued, in respect to vessels of the U.A.E., and the produce, manufactures, or merchandise imported into the United States in such vessels from the U.A.E. or from any other foreign country.

This suspension and discontinuance took effect from October 25, 1975, and shall continue only for so long as the reciprocal exemptions of vessels wholly belonging to citizens of the United States and their cargoes shall be continued.

In accordance with this declaration, by T.D. 78–139, published in the Federal Register on May 24, 1978 (43 F.R. 22173), section 4.22, Customs Regulations (19 CFR 4.22), was amended to add the U.A.E. to the list of nations whose vessels are exempted from the payment of special tonnage taxes and light money.

The Regional Commissioner of Customs, Houston, Tex. (region VI), has recommended that section 4.22 be further amended to list the member States that comprise the U.A.E. Customs Headquarters agrees with the Regional Commissioner that the amendment would aid Customs officers in identifying vessels of the U.A.E. which operate with documents issued by and bearing the name of the member States of the U.A.E. rather than the U.A.E. itself. Confusion as to the identification of a vessel could result in the erroneous assessment of special tonnage taxes and light money on vessels which are entitled to an exemption from payment.

Although Customs has the authority to refund improperly imposed charges including special tonnage taxes and light money (46 U.S.C. 8), the assessment of the special tonnage taxes due to a failure to recognize a vessel document as one of the U.A.E. is a violation of the reciprocal assurances exchanged by the United States and the U.A.E. In similar situations involving other nations, this has resulted in complaints to the Department of State.

AMENDMENT TO THE REGULATIONS

The list in section 4.22, Customs Regulations (19 CFR 4.22), of nations whose vessels are exempted from the payment of any higher tonnage duties than are applicable to vessels of the United States and from the payment of light money is amended by adding the names of the States that comprise the U.A.E. to read as follows:

United Arab Emirates (Abu Dhabi, Ajman, Dubai, Fujairah, Ras Al Khaimah, Sharjah, and Umm Al Qaiwain).

(R.S. 251, as amended, 4219, as amended, 4255, as amended, 4228, as amended, sec. 3, 23 Stat. 119, as amended, sec. 624, 46 Stat. 759 (19 U.S.C. 66, 1624, 46 U.S.C. 5, 121, 128, 141))

INAPPLICABILITY OF PUBLIC NOTICE AND DELAYED EFFECTIVE DATE REQUIREMENTS

Because this amendment merely implements a statutory requirement and involves a matter in which the public is not particularly interested, pursuant to 5 U.S.C. 553(b)(B), notice and public procedure thereon are unnecessary. Further, for the same reasons, good cause exists for dispensing with a delayed effective date under 5 U.S.C. 553(d).

INAPPLICABILITY OF REGULATORY FLEXIBILITY ACT

This document is not subject to the provisions of sections 603 and 604 of title 5, United States Code, as added by section 3 of Public Law 96–354, the Regulatory Flexibility Act. That act does not apply to any regulation such as this for which a notice of proposal rulemaking is not required by the Administrative Procedure Act (5 U.S.C. 551 et seq.) or any other statute.

REGULATIONS DETERMINED TO BE NONSIGNIFICANT

In a directive published in the Federal Register on November 8, 1978 (43 F.R. 52120), implementing Executive Order 12044, Improving Government Regulations, the Treasury Department stated that it considers each regulation or amendment to an existing regulation published in the Federal Register and codified in the Code of Federal Regulations to be significant. However, regulations of this nature, which are nonsubstantive, are essentially procedural, do not materially change existing or establish new policy, and do not impose substantial additional requirements or cost on, or substantially alter the legal rights or obligations of, those affected, may with secretarial approval, be determined not to be significant. Accordingly, it has been determined that this amendment does not meet the Treasury Department criteria in the directive for significant regulations.

DRAFTING INFORMATION

The principal author of this document was Barbara E. Whiting, Regulations and Information Division, Office of Regulations and Rulings, U.S. Customs Service. However, personnel from other offices of the Customs Service and the Departments of State and the Treasury participated in its development.

Dated: February 26, 1981.

JOHN P. SIMPSON,
Acting Assistant Secretary of the Treasury.

[Published in the Federal Register, April 6, 1981 (46 F.R. 20536)]

(T.D. 81-72)

Sections 101.3 and 101.4, Customs Regulations, Amended To Extend the Port Limits of Sandusky, Ohio

TITLE 19—CUSTOMS DUTIES

CHAPTER 1—U.S. CUSTOMS SERVICE

PART 101—GENERAL PROVISIONS

AGENCY: U.S. Customs Service, Department of the Treasury.

ACTION: Final rule.

SUMMARY: This document amends the Customs Regulations to change the field organization of the Customs Service by extending the existing port limits of Sandusky, Ohio, to incorporate all of Huron Township and the city of Huron, Ohio, and to revoke the status of Huron, Ohio, as a Customs station. The change, which will enable Customs to keep pace with a significant expansion of Customs-related activities in Huron Township and the city of Huron, is part of a continuing program to obtain more efficient use of Customs personnel, facilities, and resources, and to provide better service to carriers, importers, and the public.

EFFECTIVE DATE: May 6, 1981.

FOR FURTHER INFORMATION CONTACT: Renee DeAtley, Office of Inspection, U.S. Customs Service, 1301 Constitution Avenue NW., Washington, D.C. 20229; 202-566-8157.

SUPPLEMENTARY INFORMATION:

BACKGRCUND

During the past few years, significant Customs activity at the Sandusky, Ohio, port of entry gradually has shifted eastward to Huron Township and the city of Huron, Ohio, both of which are outside the existing port limits. The result has been recurrent requests for Customs services and assignment of Customs officers to Huron Township and the city of Huron on a temporary basis, as needed. This caused delays and increased expenses.

To provide the most economical and efficient service to the public and to meet the expanded needs of the importing community in Huron Township and the city of Huron, a notice was published in the Federal Register on September 29, 1980 (45 F.R. 64211), proposing to extend the existing port limits of the Sandusky port of entry (region IX) to include all of Huron Township and the city of Huron and to revoke the status of Huron, Ohio, as a Customs station.

The notice advised that the extension of the port limits would enable Customs to station officers where needed within the port limits, on a permanent basis, thus reducing costs to the importing public. The extension of the port limits also would enable Customs to keep pace with the expansion of Customs-related activities in Huron Township and the city of Huron, and provide better coordination of Customs services and more efficient use of available resources. The notice further advised that the extension would not require any additional manpower.

Interested parties were given until November 28, 1980, to submit written comments regarding the proposal. No comments were received. The final rule adopts the amendment as proposed.

CHANGES IN THE CUSTOMS FIELD ORGANIZATION

Under the authority vested in the President by section 1 of the act of August 1, 1914, 38 Stat. 623, as amended (19 U.S.C. 2), and delegated to the Secretary of the Treasury by Executive Order No. 10289, September 17, 1951 (3 CFR, 1949–53 comp., ch. II), and pursuant to authority provided by Treasury Department Order No. 101–5 (44 F.R. 31057), the geographical boundaries of the Sandusky, Ohio, port of entry shall include: All the territory within the geographical limits of the city of Sandusky, Huron Township, and the city of Huron, all in the State of Ohio.

AMENDMENT TO THE REGULATIONS

To reflect this action:

(1) The list of Customs regions, districts, and ports of entry in section 101.3(b), Customs Regulations (19 CFR 101.3(b)), is amended by adding "(T.D. 81–72)" following "Sandusky, Ohio," in the column headed "Ports of entry" in the Cleveland, Ohio, Customs district (region IX).

(2) The list of Customs stations in section 101.4(c), Customs Regulations (19 CFR 101.4(c)), is amended by removing "Huron, Ohio," from the column headed "Customs stations" and "Sandusky" from the column headed "Port of entry having supervision" in the Cleveland, Ohio, Customs district (region IX).

INAPPLICABILITY OF REGULATORY FLEXIBILITY ACT

This document is not subject to the provisions of sections 603 and 604 of title 5, United States Code (as added by sec. 3 of Public Law 96–354, the Regulatory Flexibility Act) because it was the subject of a notice of proposed rulemaking published in the Federal Register before January 1, 1981, the effective date of the act.

REGULATION DETERMINED TO BE NONSIGNIFICANT

In a directive published in the Federal Register on November 8, 1978 (43 F.R. 52120), implementing Executive Order 12044, Improving Government Regulations, the Treasury Department stated that it considers each regulation or amendment to an existing regulation published in the Federal Register and codified in the Code of Federal Regulations to be significant.

However, regulations which are nonsubstantive, essentially procedural, do not materially change existing or establish new policy, and do not impose substantial additional requirements or costs on, or substantially alter the legal rights or obligations of, those affected, may, with secretarial approval, be determined not to be significant. Accordingly, it has been determined that this amendment does not meet the Treasury Department criteria in the directive for significant regulations.

DRAFTING INFORMATION

The principal author of this document was Charles D. Ressin, Regulations and Information Division, Office of Regulations and Rulings, U.S. Customs Service. However, personnel from other Customs offices participated in its development.

Dated: February 16, 1981.

JOHN P. SIMPSON,
Acting Assistant Secretary of Treasury.

[Published in the Federal Register, April 6, 1981 (46 F R. 20538)]

(T.D. 81-73)

Preclearance Offices in Foreign Countries—Customs Regulations Amended

TITLE 19—CUSTOMS DUTIES

CHAPTER 1—U.S. CUSTOMS SERVICE

PART 101—GENERAL PROVISIONS

AGENCY: U.S. Customs Service, Department of the Treasury.

ACTION: Final rule.

SUMMARY: The Customs Service, the Immigration and Naturalization Service, and the Animal and Plant Health Inspection Service have established preclearance facilities in Canada, the Bahamas, and Bermuda, to provide Customs and other necessary clearances for

U.S.-bound airline passengers. This document amends the list of preclearance offices set forth in the Customs Regulations to include Edmonton, Alberta, Canada, under the supervision of the District Director of Customs, Great Falls, Mont., and to reflect the transfer of supervision over the preclearance offices of Toronto, Ontario, Canada, and Montreal, Quebec, Canada, from the District Director of Customs, Buffalo, N.Y., and St. Albans, Vt., respectively, to the Regional Commissioner of Customs, Boston, Mass.

EFFECTIVE DATE: The preclearance facility in Edmonton, Alberta, Canada, was established on October 28, 1979. Supervision over Customs activities of the Toronto, Ontario, Canada, and Montreal, Quebec, Canada, offices was transferred to the Regional Commissioner of Customs, Boston, Mass., on October 1, 1978.

FOR FURTHER INFORMATION CONTACT: Harry W. Carnes, Inspection and Control Division, U.S. Customs Service, 1301 Constitution Avenue NW., Washington, D.C. 20229; 202-566-5607.

BACKGROUND

To assist airlines and the traveling public, officers of the Customs Service (Customs), the Immigration and Naturalization Service (INS), and the Animal and Plant Health Inspection Service (APHIS) are stationed at selected airports in foreign countries to provide Customs and other necessary clearances to airline passengers on direct flights to the United States. The purpose of this procedure is to provide quicker and more efficient service to international travelers by clearing passengers before departure from the foreign country instead of at the point of first entry into the United States. Preclearance of passengers and their baggage enables inspecting officers to carry out their responsibilities while helping to prevent delays, minimize inconvenience to travelers, and reduce baggage handling.

As part of a continuing effort to improve service to the international traveling public, Customs, INS, and APHIS, expanded the preclearance program by establishing preclearance facilities in Edmonton, Alberta, Canada, on October 28, 1979.

In addition, after a review of its operations, on October 1, 1978, Customs transferred supervision over its Toronto, Ontario, Canada, and Montreal, Quebec, Canada, preclearance offices from the District Directors of Customs, Buffalo, N.Y., and St. Albans, Vt., respectively, to the Regional Commissioner of Customs, Boston, Mass. This change will enable the Regional Commissioner to carry out more effectively his responsibility for the administration and operational management of the preclearance offices within his regional jurisdiction.

CHANGE IN EXISTING REGULATIONS

Section 101.5, Customs Regulations (19 CFR 101.5), lists nine preclearance facilities in foreign countries where Customs officers are stationed and the Customs officer having supervision over the Customs functions at each preclearance office. It is necessary to amend section 101.5 to reflect the opening of the Edmonton office, and the change in supervision over the Toronto and Montreal offices.

NOTICE AND PUBLIC PROCEDURE UNNECESSARY

Because this amendment involves matters relating only to agency organization and administration and does not impose any additional affirmative duty on the public, pursuant to 5 U.S.C. 553(b)(B), notice and public procedure thereon are unnecessary, and pursuant to 5 U.S.C. 553(d)(3), a delayed effective date is not required.

DRAFTING INFORMATION

The principal author of this document was Betty A. Stemley, Regulations and Research Division, Office of Regulations and Rulings, U.S. Customs Service. However, other Customs personnel participated in its development.

AMENDMENT TO THE REGULATIONS

Section 101.5, Customs Regulations (19 CFR 101.5), is revised to read as follows:

101.5 Customs preclearance offices in foreign countries

Listed below are the preclearance offices in foreign countries where U.S. Customs officers are stationed and the Customs officers under whose supervision they function:

Country	Customs office	Customs officer having supervision
The Bahamas	Freeport	District Director, Miami, Fla.
	Nassau	District Director, Miami, Fla.
Bermuda	Kindley Field	Area Director, Kennedy Airport Area, Jamaica, N.Y.
Canada	Calgary, Alberta	District Director, Great Falls, Mont.
	Edmonton, Alberta	District Director, Great Falls, Mont.
	Montreal, Quebec	Regional Commissioner, Boston, Mass.

338-818 O - 81 - 4

Country	Cuotoms office	Customs officer having supervision
Canada	Prince Rupert, British Columbia	District Director, Anchorage, Alaska.
	Toronto, Ontario	Regional Commissioner, Boston, Mass.
	Vancouver, British Columbia	District Director, Seattle, Wash.
	Winnipeg, Manitoba	Regional Commissioner, Chicago, Ill.

(R.S. 251, as amended, section 624, 46 Stat. 759, 80 Stat. 379 (5 U.S.C. 301, 19 U.S.C. 66, 1624)).

WILLIAM T. ARCHEY,
Commissioner of Customs.

Approved: February 12, 1981.

JOHN P. SIMPSON,
Acting Assistant Secretary of the Treasury.

[Published in the Federal Register, April 6, 1981 (46 F.R. 20538)]

(T.D. 81-74)

Drawback Contract (Rate)

There follows an approved drawback contract (rate). Any person who can comply with the conditions of the contract may adhere to it by notifying a Regional Commissioner of Customs in writing of its intention to do so and providing him with the following information:

1. Name and address of claimant;
2. Factories which will operate under the contract;
3. If a corporation, the names of officers or persons with power of attorney who will sign drawback documents on behalf of adherent.

This contract is promulgated to clarify the price extra provision of the general drawback contract for steel, published as T.D. 80-227 (B), which this contract supersedes upon publication. Any person currently operating under T.D. 80-227(B) will automatically be covered by this superseding contract (which includes all privileges of T.D. 80-227(B)).

Dated: March 31, 1981.

GEORGE C. STEUART
(For Marilyn G. Morrison, Director,
Carriers, Drawback and Bonds Division).

Drawback Contract Under 19 U.S.C. 1313(b) Articles Manufactured Using Steel

IMPORTED MERCHANDISE OR DRAWBACK PRODUCTS TO BE DESIGNATED AS THE BASIS FOR DRAWBACK ON THE EXPORTED PRODUCTS	DUTY-PAID, DUTY-FREE OR DOMESTIC MERCHANDISE OF THE SAME KIND AND QUALITY AS THAT DESIGNATED WHICH WILL BE USED IN THE MANUFACTURE OF THE EXPORTED PRODUCTS
Steel of one general class, e.g., an ingot, falling within one SAE, AISI, or ASTM [1] specification, and if the specification contains one or more grades falling within one grade of the specification.	Steel of the same general class, specification, and grade as the steel in the column immediately to the left hereof.

1. The duty-free or domestic steel used instead of the duty-paid steel will be interchangeable for manufacturing purposes with the duty-paid steel. To be interchangeable a steel must be able to be used in place of the substituted steel without any additional processing step in the manufacture of the article on which drawback is to be claimed.

2. Because the duty-paid steel that is to be designated as the basis for drawback is dutiable according to its value, the amount of duty can vary with its size (gage, width, or length) or composition (e.g., chrome content). If such variances occur, we shall designate by "price extra", in no case claiming drawback in a greater amount than that which would have accrued to that steel used in manufacture of or appearing in the exported articles. It is understood price extra shall not be available for coated or plated steel, covered in paragraph 5, infra, insofar as the coating or plating is concerned.

3. The drawback claimant agrees that the duty-paid steel will be so similar in quality to the steel used to manufacture the articles on which drawback will be claimed that the steel so used, if imported, would be classifiable in the same tariff item number and at the same rate of duty as the duty-paid imported steel.

4. It is agreed that any fluctuation in market value caused by a factor other than quality does not affect drawback.

5. If the steel is coated or plated with a base metal, in addition to meeting the requirements for uncoated or unplated steel set forth in

[1] Standards set by the Society of Automotive Engineers (SAE), the American Iron and Steel Institute (AISI), or the American Society for Testing and Materials (ASTM).

the parallel columns the drawback applicant agrees that the base-metal coating or plating on the duty-free or domestic steel used in place of the duty-paid steel will have the same composition and thickness as the coating or plating on the duty-paid steel. If the coated or plated duty-paid steel is within a SAE, AISI, ASTM specification, any duty-free or domestic coated or plated steel covered by the same specification and grade (if two or more grades are in the specification) is considered to meet this criterion for same kind and quality.

EXPORTED ARTICLES ON WHICH DRAWBACK WILL BE CLAIMED

The exported articles will have been manufactured in the United States using steels described in the parallel columns above.

GENERAL STATEMENT

We manufacture for our own account. We may produce articles for the account of another or another manufacturer may produce for our account under contract within the principal and agency relationship outlined in T.D. 55027(2) and T.D. 55207(1).

PRODUCTION

The steels described in the parallel columns will be used to manufacture new and different articles, having distinctive names, characters and uses.

MULTIPLE ARTICLES

Not applicable.

WASTE

The drawback claimant understands that no drawback is payable on any waste which results from the manufacturing operation. Unless the claim for drawback is based on the quantity of steel appearing in the exported articles, the drawback claimant agrees to keep records to establish the value (or the lack of value), the quantity, and the disposition of any waste that results from manufacturing the exported articles. If no waste results, the drawback claimant agrees to keep records to establish that fact.

LOSS OR GAIN

The drawback applicant agrees to keep records showing the extent of any loss or gain in net weight or measurement of the steel caused by atmospheric conditions, chemical reactions, or other factors.

PROCEDURES AND RECORDS MAINTAINED

We will maintain records to establish:

1. The identity and specifications of the merchandise we designate;

2. The quantity of merchandise of the same kind and quality as the designated merchandise [2] used to produce the exported article;

3. That, within 3 years after receiving it at our factory, we used the designated merchandise to produce articles. During the same 3-year period, we produce [3] the exported articles.

We realize that to obtain drawback the claimant must establish that the completed articles were exported within 5 years after the importation of the imported merchandise.

Our records establishing our compliance with these requirements will be available for audit by Customs during business hours. We understand that drawback is not payable without proof of compliance with title 19, United States Code, section 1313(b), and part 22 of the Customs Regulations.

BASIS OF CLAIM

The drawback claimant agrees to claim drawback on the quantity of steel used in producing the exported articles only if there is no waste or valueless or unrecovered waste in the manufacturing operation.

If there is no waste or if the drawback claimant does not want to keep records of any waste involved, the drawback claimant may claim drawback on the quantity of eligible steel that appears in the exported articles.

If there is valuable waste recovered from the manufacturing operation and records are kept which show the quantity and value of the waste from each lot of steel, the drawback claimant may claim drawback on the quantity of eligible material used to produce the exported articles less the amount of that steel which the value of the waste would replace.

AGREEMENTS

The corporation specifically agrees that it will:

1. Comply fully with the terms of this statement when claiming drawback;

2. Open its factory and records for examination at all reasonable hours by authorized Government officers;

3. Keep its drawback related records and supporting data for at least 3 years from the date of liquidation of any drawback claim predicated in whole or in part upon this statement;

4. Keep this statement current by reporting promptly, to the Regional Commissioner who liquidates its claims, any changes in the number or locations of its offices or factories, the corporate name, or the corporate organization by succession or reincorporation;

[2] If claims are to be made on an appearing in basis, the remainder of this sentence should read "appearing in the exported articles we produced."

[3] The date of production is the date an article is completed.

5. Keep a copy of this statement on file for ready reference by employees and require all officials and employees concerned to familiarize themselves with the provisions of this statement; and

6. Issue instructions to insure proper compliance with title 19, United States Code, section 1313(b), part 22 of the Customs Regulations and this statement.

(T.D. 81-75)

Foreign Currencies—Variances From Quarterly Rate

The following rates of exchange are based upon rates certified to the Secretary of the Treasury by the Federal Reserve Bank of New York, pursuant to section 522(C), Tariff Act of 1930, as amended (31 U.S.C. 372(c)), and reflect variances of 5 per centum or more from the quarterly rate published in T.D. 81-13 for the following countries. Therefore, as to entries covering merchandise exported on the dates listed, whenever it is necessary for Customs purposes to convert such currency into currency of the United States, converison shall be at the following rates.

Austria schilling:	
March 16, 1981	$0. 067340
March 17–20, 1981	Quarterly
Belgium franc:	
March 16, 1981	$0. 029172
March 17, 1981	. 029214
March 18, 1981	. 029638
March 19, 1981	. 029780
March 20, 1981	. 029481
Denmark krone:	
March 16, 1981	$0. 152033
March 17, 1981	. 152323
March 18, 1981	. 154560
March 19, 1981	. 155135
March 20, 1981	. 153953
France franc:	
March 16, 1981	$0. 202511
March 17, 1981	. 202922
March 18, 1981	. 206016
March 19, 1981	. 206932
March 20, 1981	. 205339
Germany deutsche mark:	
March 16, 1981	$0. 478057
March 17, 1981	. 478927
March 18–20, 1981	Quarterly

Ireland pound:	
March 16, 1981	$1.7435
March 17, 1981	1.7450
March 18, 1981	1.7750
March 19, 1981	Quarterly
March 20, 1981	1.7645
Italy lira:	
March 16, 1981	$0.000980
March 17, 1981	.000982
March 18, 1981	.000994
March 19, 1981	.001000
March 20, 1981	.000990
Netherlands guilder:	
March 16, 1981	$0.431779
March 17, 1981	.433088
March 18, 1981	.439560
March 19, 1981	.440529
March 20, 1981	.436205
Portugal escudo:	
March 16, 1981	$0.017683
March 17, 1981	.017715
March 18–20, 1981	Quarterly
Republic of South Africa rand:	
March 16, 1981	$1.2670
March 17, 1981	1.2700
March 18, 1981	1.2720
March 19, 1981	Quarterly
March 20, 1981	1.2685
Sri Lanka rupee:	
March 16–20, 1981	$0.055249
Switzerland franc:	
March 16, 1981	$0.525762
March 17, 1981	.526177
March 18, 1981	.536193
March 19, 1981	Quarterly
March 20, 1981	.530082
United Kingdom pound:	
March 16, 1981	$2.2365
March 17, 1981	2.2490
March 18–20, 1981	2.2785

(LIQ-03-01 O:C:E)

Dated: March 20, 1981.

GWENN KLEIN KIRSCHNER,
Acting Chief,
Customs Information Exchange.

(T.D. 81-76)

Foreign Currencies—Daily Rates for Countries Not on Quarterly List

Rates of exchange based on rates certified to the Secretary of the Treasury by the Federal Reserve Bank of New York for the Brazil cruzeiro, People's Republic of China yuan, Hong Kong dollar, Iran rial, Philippines peso, Singapore dollar, Thailand baht (tical), and Venezuela bolivar.

The Federal Reserve Bank of New York, pursuant to section 522(c), Tariff Act of 1930, as amended (31 U.S.C. 372 (c)), has certified buying rates for the dates and foreign currencies shown below. The rates of exchange, based on these buying rates, are published for the information and use of Customs officers and others concerned pursuant to part 159, subpart C, Customs Regulations (19 CFR 159, Subpart C).

Brazil cruzeiro:	
March 16, 1981	$0.013628
March 17–20, 1981	.013323
People's Republic of China yuan:	
March 16, 1981	$0.609682
March 17, 1981	.613158
March 18, 1981	.616259
March 19, 1981	.623092
March 20, 1981	.620001
Hong Kong dollar:	
March 16, 1981	$0.189430
March 17, 1981	.189789
March 18, 1981	.191113
March 19, 1981	.190621
March 20, 1981	.190840
Iran rial:	
March 16–20, 1981	Not available
Phillippines peso:	
March 16–19, 1981	$0.130548
March 20, 1981	.130039
Singapore dollar:	
March 16, 1981	$0.475964
March 17, 1981	.476190
March 18, 1981	.480538
March 19, 1981	.479616
March 20, 1981	.478927
Thailand baht (tical):	
March 16–20, 1981	$0.048780

Venezuela bolivar:
March 16–19, 1981 ..... $0. 232883
March 20, 1981 232937

(LIQ-03-01 O:C:E)

Dated: March 20, 1981.

GWENN KLEIN KIRSCHNER,
Acting Chief,
Customs Information Exchange.

ERRATUM

In CUSTOMS BULLETIN, volume 15, No. 2, dated January 14, 1981, in T.D. No. 81–5, the following rate should be corrected.

Singapore dollar:
December 18, 1980 ..... $0. 472367

(LIQ-03-01 O:C:E)

Dated: March 24, 1981.

GWENN KLEIN KIRSCHNER,
Acting Chief,
Customs Information Exchange.

United States Court of International Trade

One Federal Plaza
New York, N.Y. 10007

Chief Judge

Edward D. Re

Judges

Paul P. Rao
Morgan Ford
Scovel Richardson
Fredrick Landis
James L. Watson
Herbert N. Maletz
Bernard Newman
Nils A. Boe

Senior Judge

Samuel M. Rosenstein

Clerk

Joseph E. Lombardi

Decision of the United States Court of International Trade

(Slip Op. 81–25)

HAARMAN & REIMER CORPORATION, PLAINTIFF *v.* THE UNITED STATES; MALCOLM BALDRIGE, SECRETARY OF COMMERCE; PAUL O'DAY, ACTING UNDERSECRETARY OF COMMERCE FOR INTERNATIONAL TRADE, DEPARTMENT OF COMMERCE; WILLIAM T. ARCHERY, ACTING COMMISSIONER OF CUSTOMS, AND ALL DISTRICT DIRECTORS OF CUSTOMS, DEFENDANTS AND CHINA NATIONAL NATIVE PRODUCE & ANIMAL BY-PRODUCTS IMPORT AND EXPORT CORPORATION, INTERVENOR

Court No. 81–1–00027

Order Denying Plaintiff's Motion for Rehearing

[Plaintiff's motion for rehearing denied.]

(Dated March 16, 1981)

Eugene L. Stewart, Terence P. Stewart and *Paul W. Jameson* on the memorandum brief (*Eugine L. Stewart* at the oral argument) for the plantiff.

Thomas S. Martin, Acting Assistant Attorney General; *David M. Cohen*, Director, Commercial Litigation Branch, on the memorandum brief (*Velta A. Melnbrencis* with him on the brief and at the oral argument), for the defendants.

Shearman & Sterling (*Donald L. Cuneo* on the memorandum brief and *Charles B. Manuel, Jr.* with him at the oral argument), for China National Native Produce & Animal By-Products Import and Export Corporation, intervenor.

BOE, Judge: In filing its motion for rehearing requesting this court to reconsider its decision in its Memorandum Opinion and Order under date of February 2, 1981, denying plaintiff's application for a preliminary injunction, the plaintiff asserts that certain pertinent points and authorities then presented were not considered by this court.

Contrary to the misapprehension of counsel for plaintiff, the silence of this court with respect to some arguments which may have been raised by him or with respect to certain authorities cited in the hearing on plaintiff's application for a preliminary injunction, cannot be interpreted as a lack of consideration thereof by this court. Counsel has presented his arguments particularly with respect to the decisions in the *Timken Company* v. *Simon*, 539 F. 2d 221 (D.C. Cir. 1976) and *The Budd Company, Railway Division* v. *The United States*, 1 CIT —, Slip Op. 80–15 (Dec. 29, 1980), at length in the oral argument at the hearing on plaintiff's application for a preliminary injunction. A continuation of the same arguments has been vigorously pursued in plaintiff's present motion for rehearing.

In light of plaintiff's uncertainty as to this court's understanding of the full import of the *Timken* and *Budd* decisions, this court will unequivocally state that is does not deem these decisions to be applicable to nor supportive of plaintiff's position in the present proceeding in which he now seeks reconsideration.

It is elementary that one of the showings prerequisite to the granting of a preliminary injunction is the likelihood that the applicant may be successful in the trial of its cause of action on the merits. In its prior order denying plaintiff's application for a preliminary injunction, this court predicated its decision principally on the foregoing prerequisite, pointing out in its opinion that the action instituted by the plaintiff has not been brought in conformity with the provisions of the Trade Agreements Act of 1979, and specifically 19 U.S.C. 1516a, which solely and exclusively provides for the time and manner of judicial review of the subject matter of the within action—namely, the pre-

liminary negative determination of the administering authority as to critical circumstances in connection with its affirmative determination of less than fair value sales in an antidumping proceeding.

The *Timken* decision, upon which the plaintiff relies so strenuously, in no manner has been deemed applicable to the instant proceeding. In *Timken* the jurisdiction of the U.S. District Court was sought to obtain injunctive relief, not then available in the U.S. Customs Court, to enforce the immediate implementation of an affirmative less than fair value determination by the Treasury Department and the affirmative injury determination by the International Trade Commission, which the Secretary of the Treasury in his ministerial capacity was seeking to impede and delay by requiring immediate appraisement of the merchandise in question. As the appellate court stated in the *Timken* case, supra at 226:

> The gravamen of Timken's complaint is that the Secretary has acted beyond his statutory authority in revoking the withholding of appraisement notice and ordering appraisement of the subject entries prior to his publication of a dumping finding. If section 516 enabled Timken to get judicial review of that issue in the Customs Court, we would not hesitate to reverse the District Court assertion of jurisdiction in this case.

The plaintiff likewise in its memorandum in support of its motion for rehearing at page 4 has correctly stated the true posture in which the *Timken* decision should be viewed:

> The *Timken* case thus stands for the principle that district courts could assert jurisdiction over antidumping related matters for which no adequate remedy existed in the Customs Court.

The facts and circumstances in the instant proceedings and the cause of action upon which such proceedings are predicated are to no extent analogous to those presented in *Timken*. The determination of the Commerce Department with respect to the existence of critical circumstances was a substantive determination and not a ministerial act or decision as involved in *Timken*.

The *Timken* decision was decided in 1976. In reaching its decision at that time the appellate court concluded that the legislative history provided no persuasive evidence indicating that nonreviewability was intended by the Congress and that, accordingly, the U.S. District Courts could assert jurisdiction in antidumping matters for which no adequate remedy then existed in the Customs Court.

From an examination of the legislative history relating to the subsequent enactment of the Trade Agreements Act of 1979 and the Customs Court Act of 1980, however, it appears abundantly clear that Congress has prescribed therein the time, nature, and method of the judicial review of administrative agency action relating to

antidumping determinations. It is deemed unwarranted to reiterate the comments, quoted at length in this court's prior opinion under date of February 2, 1981, contained in the House Judiciary Committee Report relating to the enactment of 28 U.S.C. 1581(i), under which the plaintiff erroneously seeks to predicate its action, the relationship thereof to the Trade Agreements Act of 1979 and the exclusive review of agency determinations specifically provided for therein.[1] (19 U.S.C. 1516a).

Suffice it to further say, plaintiff's counsels' analysis and interpretation of the *Budd* decision, indeed, appear to bear little resemblance to the express holding of this court therein. In plaintiff's memorandum in support of its motion for rehearing, the holding of this court in the *Budd* decision is questionably summarized by counsel at page 2:

> In *Budd* this court held that the International Trade Commission's preliminary negative injury determination was *unlawful* because the ITC's lack of diligence in seeking information available to it was contrary to the Congressional mandate to conduct a thorough investigation. [Italic supplied.]

This court fails to discern any language contained in the *Budd* decision construing the preliminary negative injury determination of the International Trade Commission as unlawful. The decision in every action and the language expressed therein must be viewed in connection with the posture and nature of the particular proceedings before the court and concerning which the decision refers. In the *Budd* case the preliminary negative injury determination made by the International Trade Commission was formally presented to this court for judicial review pursuant to statutory authority by the filing of a summons, complaint and answers, followed by cross-motions for summary judgment, pursuant to the provisions of 19 U.S.C. 1516a as enacted by the Trade Agreements Act of 1979.

In its decision this court, although calling attention to the statutorily mandated investigative obligations of the Commission independent of any burden of proof falling upon the petitioner, neither attempted to define the extent of a thorough investigation which should be conducted in every preliminary investigative proceeding, nor prescribed a definitive measurement of that information which might be reasonably available in every proceeding. On the contrary, this court in the *Budd* decision requested the International Trade Commission, after consideration of certain documents and available evidentiary facts, to supplement and/or amplify its findings of fact, if warranted, for the purpose of informing this court in its judicial review deter-

[1] House Judiciary Committee Report, H.R. Rept. No. 96-1235 at 47-48.

mination more specifically as to the rational basis upon which the Commission's determination was founded. Indeed, the foregoing directive contained in the order of remand in the *Budd* decision is a far cry from the characterization thereof made by plaintiff's counsel that the preliminary negative determination of the Commission was unlawful.

In the *Budd* case the preliminary negative determination of the International Trade Commission was properly before this court pursuant to the provisions of 19 U.S.C. 1516a. The instant proceedings however, as hereinbefore stated, has not been brought in conformity with the Trade Agreements Act of 1979 which solely and exclusively provides for the time and manner of judicial review of determinations relating to antidumping. The plaintiff by predicating his action under the provisions of 28 U.S.C. 1581(i), which clearly does not create a cause of action, seeks to attain through indirection a judicial reivew which the statutes and the legislative history advise are within the exclusive purview of the provisions provided for in the Trade Agreements Act of 1979.

The absence of a specific provision for judicial review of a preliminary negative determination by the administering authority cannot be presumed, in view of the legislative history, to be an unintentional omission thereby justifying judicial review under the residual jurisdictional grant provided by 28 U.S.C. 1581(i). Rather, such an absence conforms to the pattern of congressional intent evidenced in the statutory provisions of the Trade Agreements Act of 1979 and by legislative history to postpone judicial review until the time the final determination is made by the administering authority in accordance with the provisions of 19 U.S.C. 1673d.

In view of the fact that this court is satisfied that the plaintiff will be unable to prevail in the trial of this action on the merits, the application of the plaintiff for a preliminary injunction necessarily fails.

The opinion of this court, contained in its prior memorandum and order denying plaintiff's application for a preliminary injunction, determining that the plaintiff has failed to sustain its burden of demonstrating that irreparable injury will result to it by the failure of this court to grant its application for a preliminary injunction is reaffirmed herein.

It is, accordingly, hereby

ORDERED that the motion of the plaintiff for rehearing of this court's opinion and order denying its application for a preliminary injunction made and entered under date of February 2, 1981, is in all things denied.

(Slip Op. 81-26)

ATLANTIC SUGAR, LTD., ET AL., PLAINTIFF *v.* THE UNITED STATES, DEFENDANT, AMSTAR CORPORATION, PARTY-IN-INTEREST

Court No. 80-5-00754

Memorandum and Order

(Dated March 17, 1981)

WATSON, Judge: This is an action under Section 516A(a)(2) of the Tariff Act of 1930, (19 U.S.C. 1516a(a)(2)) for review of a determination by the International Trade Commission (ITC) that the importation of sugar from Canada was causing material injury to a regional industry in the United States.

Defendant has moved to suspend these proceedings for not more than 75 days to allow the ITC to review its determination and to provide additional opportunity for public comment. The ground for the motion is the asserted discovery by the ITC of errors in the figures upon which it based its finding that a regional industry existed.[1] The errors are described broadly as "computational errors" made by the staff of the ITC and relate to figures on table 3, appearing on page A-18 of the Final Determination of Material Injury.

Defendant says that the suspension it requests will avoid the time and expense of a later formal remand and will least disrupt the judicial proceeding. Intervenor Amstar has expressed no objection. Plaintiffs, however, object on the ground that the procedure would not expedite the resolution of the action. Plaintiffs point out that they have raised issues regarding other aspects of the determination, which are unaffected by the errors and the resolution of which would only be postponed if the case was remanded at this stage. Plaintiffs also argue that the court should be the judge of the consequences of the errors and whether they warrant remand or another remedy.

The court is of the opinion that, although remand may ultimately be required, it is not called for at this time. In the first place, the court has not been sufficiently informed as to the exact nature of the errors so as to be certain that remand would be the proper procedure. The description of the errors in the moving papers has been given only in the most general terms.

The moving papers state that the General Counsel of the ITC is in the process of drafting a memorandum for the ITC outlining the nature of the errors discovered and containing the corrected figures

[1] In the circumstances set out in 19 U.S.C. 1677(4)(c) material injury may be found with respect to less than an entire domestic industry. The statute sets out the criteria of economic insularity by which producers in a portion of the United States may be treated as a separate industry.

and computations. Without a precise understanding of the errors and the ability to make a reasonable estimation of the consequences, the court is not in a position to be certain that a remand is correct, or to give the remand a proper structure, or to say that further judicial proceedings would be without benefit. In this respect, the situation here differs from those in which an initial serious question as to the validity of the entire administrative proceeding becomes apparent or those in which the opacity of the administrative determination does not allow the court to proceed with its function. See, *Ford Motor Co.* v. *Labor Board*, 305 U.S. 364 (1938). See also, *SCM Corporation* v. *United States*, 84 Cust. Ct. 227, C.R.D. 80–2, 487 F. Supp. 96 (1980).

In addition to the sketchiness of the details regarding the errors committed the court is disinclined to remand at this time for other reasons. The motion for remand was filed just 1 day before the filing of plaintiffs' motion for review of the record under rule 56.1. The latter motion is a presentation of plaintiffs' complete argument against the determination and it goes well beyond the aspect which is evidently affected by the errors, i.e., the existence of a regional industry. For example, plaintiffs also challenge findings that the volume of imports was significant;[2] that they depressed or prevented the increase of domestic prices;[3] or caused the loss of sales,[4] or placed an increased burden on government price-support programs.[5] Thus, unless the request results in the reversal of the original injury determination (the likelihood of which the court is unable to estimate) the need for a coutinued and complete judicial review will remain.

In this respect too, these circumstances differ from those in which completed dispositive motions have served to isolate and clarify the need for remand. See, *Voss International Corp.* v. *United States*, 78 Cust. Ct. 130, C.D. 4698, 432 F. Supp. 205 (1977). See also, *Sprague Electric Company* v. *United States*, 84 Cust. Ct. 243, C.R.D. 80–3, 488 F. Supp. 910 (1980).

It seems more conducive to the speedy disposition of this action that defendant and Intervenor reply to the motion for review and the multiplicity of issues it raises. The propriety of remand will be considered thereafter. It is better to defer consideration of remand to a time when it is unavoidable and can be accomplished with complete understanding of its necessity, in coordination with other aspects of the action, and with precise instructions.

The necessity for remand here may be removed by other dispositive factors or may be increased by developments in other areas of the

[2] 19 U.S.C. 1677(7)(C)(i).
[3] 19 U.S.C. 1677(7)(C)(ii)(II).
[4] 19 U.S.C. 1677(7)(C)(iii)(I).
[5] 19 U.S.C. 1677(7)(D)(ii).

action. In any event, the court will be in a better position to evaluate the need for a remand and devise the proper framework if it proceeds as far as possible toward the completion of the review.

The court is also mindful of the legislative intention in the Trade Agreements Act of 1979, that the overall review process in these matters be shortened [6] and the express provision in the Customs Courts Act of 1980, that these actions be given a priority over most other pending actions and be expedited in every way.[7]

In sum, defendant has not demonstrated to the court by argument or citation of authority that it would be proper to remand the matter at this time on representations of incipient error. The court does not defer consideration of remand out of empty procedural formality. Contrast, *United States* v. *Benmar Transport & Leasing Corp.*, 444 U.S. 4 (1979). At this point, the continuation of judicial review appears more likely to speed the resolution of the action and serve the interests of justice.

For the reasons expressed above defendant's motion for remand is denied and it is further

ORDERED, that defendant and intervenor shall respond to plaintiffs' motion for review within 30 days after entry of this order and shall include in their responses such additional details regarding the necessity for remand as are available to them.

(Slip Op. 81–27)

FRUEHAUF CORPORATION, PLAINTIFF *v.* UNITED STATES, DEFENDANT

Court No. 78–7–01295

Flooring for Trailers

HARDWOOD FLOORING FOR TRUCK TRAILERS—PARTS OF MOTOR VEHICLES.

Imported kits for constructing truck trailer floors were classified by Customs as "other" parts of motor vehicles under item 602.27 of the Tariff Schedules of the United States (TSUS), as modified by T.D. 68–9. Plaintiff claims that the merchandise is classifiable under item 202.58, TSUS, providing for other hardwood flooring in strips and planks, whether or not drilled or treated. The action is before the court on cross-motions for summary judgment.

---

[6] H.R. Rept. No. 96-317, 96th Cong., 1st sess. 181 (1979). S. Rept. No. 96-249, 96th Cong., 1st sess. 251 (1979).

[7] 28 U.S.C. 2647.

The pertinent facts are undisputed. The kits comprised hardwood boards ordered to specified lengths and widths with tongue and grooving and rabbeted on one end. Each kit contained the requisite number of hardwood boards for constructing a trailer floor of particular dimensions, and rabbeting facilitated the positioning and assembly of the boards into a trailer floor. In addition to the imported boards, various structural and other components were required for the construction of a trailer floor.

HELD.

The specific dimensions in which the boards were ordered for constructing trailer floors of particular sizes and the rabbeting process are entirely consistent with, and in furtherance of, the use of the merchandise as flooring material. The further fact that the imports were packaged in kits for a particular trailer installation does not destroy the character of the merchandise as hardwood flooring in strips and planks. Accordingly, the importations are embraced by item 202.58, TSUS, and Customs' classification under item 692.27, TSUS, was erroneous.

[Plaintiff's motion for summary judgment granted; defendant's cross-motion for summary judgment denied.]

(Decided March 18, 1981)

Webster & Chamberlain, Esqs. (*Christopher L. Hartwell*, Esq., on the brief), for the plaintiff.

Thomas S. Martin, Acting Assistant Attorney General; *Joseph I. Liebman*, Attorney in Charge, International Trade Field Office, Commercial Litigation Branch (*Jerry P. Wiskin*, trial attorney, on the brief), for the defendant.

NEWMAN, Judge: The parties in this action have filed cross-motions for summary judgment.[1] For the reasons stated herein, plaintiff's motion is granted, and defendant's cross-motion is denied.

The issue presented concerns the proper tariff classification for certain kits which were used to construct truck trailer floors. This merchandise was imported by plaintiff from Thailand and Singapore and entered at the port of San Francisco in 1974. Upon liquidation of the entries, the imports were assessed with duty at the rate of 4 per centum ad valorem under the provision for "other" parts of motor vehicles in item 692.27, Tariff Schedules of the United States (TSUS), as modified by T.D. 68–9. Plaintiff claims that the merchandise is entitled to duty-free entry under item 202.58, TSUS,

[1] This action was previously before the court on defendant's motion to dismiss for lack of jurisdiction, which motion was denied by an order entered on Nov. 20, 1978.

which covers other hardwood flooring in strips and planks, whether or not drilled or treated.

To support its motion, plaintiff has submitted an affidavit (with attached exhibits) of John P. Schauerte, an engineer employed by plaintiff. In its cross-motion, defendant relies upon the presumption of correctness attaching to the classification, the entry papers, and upon plaintiff's responses to interrogatories and request for admissions served by defendant.

The pertinent and undisputed facts are: Plaintiff imported certain kits comprised of hardwood boards ordered in specific lengths and widths with tongue and grooving. These imported kits were utilized by plaintiff for constructing truck trailer floors, and each kit contained the requisite number of hardwood boards for constructing a trailer floor of particular dimensions. It further appears that the hardwood boards as imported were rabbeted at one end, meaning that an L-shaped cutout had been made across the width of the boards. The cutout facilitated the positioning and assembly of the boards into a trailer floor. In addition to the imported hardwood pieces, various structural and other components were required for constructing the trailer floor.

The following steps were involved in constructing trailer floors: (1) Cutting the imported boards to the length required if used in a trailer other than the model for which they were specified; (2) undercoating the boards; (3) positioning the crossmembers, front-frame and coupler in the tooling fixture; (4) positioning the boards in that section into the fixture; (5) drilling the floor screw holes; (6) installing screws; (7) positioning and attaching the side walls; (8) installing the front and rear walls.

Plaintiff maintains that the imported merchandise is specifically provided for eo nomine in item 202.58, TSUS, which precludes classification of the merchandise as a "par" pursuant to General Interpretative Rule 10(i)(j)[2]. Defendant advances the argument that the imported merchandise does not fall within the ambit of item 202.58 inasmuch as hardood flooring is a material and the imported kits were advanced beyond the material stage.

Irrespective of whether flooring is a material used on floors, as observed by the court in *B. Axelrod & Co.* v. *United States*, 70 Cust. Ct. 117, 125, C.D. 4417 (1973), or is more than mere materials, as noted in *D. B. Frampton & Company, et al.* v. *United States*, 60 Cust. Ct. 4, 16, C.D. 324 (1968), I conclude that the imported merchandise constitutes flooring within the purview of item 202.58, TSUS.

[2] Rule 10(i)(j) states: "A provision for 'part' of an article covers a product solely or chiefly used as a part of such article, but does not prevail over a specific provision for such part".

Even if flooring is a material, as insisted by defendant, nevertheless flooring need not be a material in the same sense that plywood, for example (which is used for interior and exterior construction of roofs, walls, floors, etc.), is a material. Hardwood flooring in strips and planks as provided for in item 202.58 need only be a material insofar as it is used for constructing floors. Significantly, that was precisely the use for which the imported merchandise was intended. Although the merchandise was imported as so-called kits, it must be observed that the merchandise did not comprise a prefabricated truck trailer floor, which obviously would be more than flooring in strips or planks. Here, the kits included merely hardwood flooring boards, and did not include the other necessary components to construct a trailer floor, as delineated in the affidavit submitted by plaintiff.

The imported kits, although comprising hardwood boards made to specified dimensions for a particular size trailer and rabbeted to facilitate installation, are not advanced beyond flooring. Congress recognized that merchandise classifiable as hardwood flooring in strips and planks was manufactured to accurate dimensions and drilled with holes to facilitate installation. Explanatory Notes, Tariff Classification Study (1960),[3] schedule 2, part 1, page 21; *D. H. Frampton, supra*, at 16. In view of such congressional intent, I fail to see the logic of defendant's argument that cutting to specified dimensions and rabbeting to facilitate installation should be regarded as an advancement of the merchandise beyond the status of flooring in strips and planks.

In the final analysis, the question to be resolved is whether, as a matter of law, these hardwood boards utilized for constructing truck trailer floors lose their status as flooring by cutting to specified dimensions, rabbeting, and packaging in kits containing the required number of boards for a trailer floor of a particular size. After careful consideration of the arguments presented by counsel, I must agree with plaintiff's contention that these facts do not preclude classification of the merchandise under item 202.58, TSUS. The specific dimensions in which the boards were ordered by plaintiff for constructing trailer floors, together with the rabbeting process, are entirely consistent with, and in furtherance of, the use of the merchandise as flooring. The further fact that the imports were packaged in kits for a particular trailer installation does not destroy the character of the merchandise as hardwood flooring in strips and planks. Accordingly, I have determined that the importations in this case are embraced by item 202.58, TSUS, and that classification by Customs under item 692.27, TSUS, was erroneous.

---

[3] While the description of flooring in the Tariff Classification Study does not mention rabbeting, there is nothing that suggests that such process precludes classification of merchandise as hardwood flooring.

Concluding, I find that there is no genuine dispute as to any material fact, and this plaintiff is entitled to summary judgment as a matter of law. Defendant's cross-motion for summary judgment is denied.

Decisions of the United States Customs Court

Abstracts

Abstracted Protest Decisions

DEPARTMENT OF THE TREASURY, *March 23, 1981.*

The following abstracts of decisions of the United States Court of International Trade at New York are published for the information and guidance of officers of the customs and others concerned. Although the decisions are not of sufficient general interest to print in full, the summary herein given will be of assistance to customs officials in easily locating cases and tracing important facts.

WILLIAM T. ARCHEY,
Acting Commissioner of Customs.

DECISION NUMBER	JUDGE & DATE OF DECISION	PLAINTIFF	COURT NO.	ASSESSED	HELD	BASIS	PORT OF ENTRY AND MERCHANDISE
				Par. or Item No. and Rate	Par. or Item No. and Rate		
P81/36	Maletz, J. March 19, 1981	Matsushita, Electric Corporation of America	77-5-00758	Sec. 304, Tariff Act of 1930, as amended 10% marking penalty for failure to mark merchandise with country of origin	Merchandise exempt from country of origin marking requirements	19 CFR 134.35 U.S. v. Gibson-Thomsen Co., Inc. (C.A.D. 98)	San Francisco "Thin trimmer capacitors" and "electrolytic capacitors"; articles sold by plaintiff to manufacturers in U.S. who used them to manufacture different articles; outermost containers marked to indicate country of origin
P81/37	Ford, J. March 20, 1981	Renold, Inc.	77-9-02855	Item 649.43 15%	Item 649.49 5%	Agreed statement of facts	New York Mail point, chisel and spade
P81/38	Newman, J. March 20, 1981	A. N. Deringer, Inc., a/c Uniroyal, Inc.	78-1-00182	Item 657.25 9.5%	Item 772.65 4%	Uniroyal, Inc., c/o A. N. Deringer, Inc. (Abs. P80/59)	Champlain-Rouses Point (Ogdensburg) Rubber hose, pipe or tubing in various lengths with attached fittings

Decision of the United States Court of International Trade

Abstracts

Abstracted Reappraisement Decisions

DECISION NUMBER	JUDGE & DATE OF DECISION	PLAINTIFF	COURT NO.	BASIS OF VALUATION	HELD VALUE	BASIS	PORT OF ENTRY AND MERCHANDISE
R81/97	Re, C.J. March 17, 1981	Holly Stores Inc.	78-4-00630	Export value	Appraised values shown on entry papers less additions included in appraised values to reflect currency revaluation	C.B.S. Imports Corp. v. U.S. (C.D. 4739)	New York Wearing apparel, etc.
R81/98	Re, C.J. March 17, 1981	S. S. Kresge Co.	78-3-00511	Export value	Appraised values shown on entry papers less additions included in appraised values to reflect currency revaluation	C.B.S. Imports Corp. v. U.S. (C.D. 4739)	Longview (Portland, Oreg.) Wearing apparel, etc.

R81/99	Re, C.J. March 17, 1981	S. S. Kresge Co.	78-9-01568	Export value	Appraised values shown on entry papers less additions included in appraised values to reflect currency revaluation	C.P.S. Imports Corp. v. U.S. (C.D. 4739)	New York Wearing apparel, etc.
R81/100	Re, C.J. March 17, 1981	P. A. Originals Ltd.	76-9-02113, etc.	Export value	Appraised values shown on entry papers less additions included in appraised values to reflect currency revaluation	C.B.S. Imports Corp. v. U.S. (C.D. 4739)	New York Wearing apparel, etc.
R81/101	Re, C.J. March 17, 1981	Sanyo Electric Inc.	76-7-01602	Export value	Appraised values shown on entry papers less additions included in appraised values to reflect currency revaluation	C.B.S. Imports Corp. v. U.S. (C.D. 4739)	New York Electrical articles
R81/102	Re, C.J. March 19, 1981	C. Itoh & Co. (America) Inc.	72-11-02224	Export value	Appraised values shown on entry papers less additions included in appraised values to reflect currency revaluation	C.B.S. Imports Corp. v. U.S. (C.D. 4739)	New York Various articles
R81/103	Re, C.J. March 19, 1981	S.S. Kresge Co.	78-1-00058	Export value	Appraised values shown on entry papers less additions included in appraised values to reflect currency revaluation	C.B.S. Imports Corp. v. U.S. (C.D. 4739)	New York Wearing apparel, etc.

DECISION NUMBER	JUDGE & DATE OF DECISION	PLAINTIFF	COURT NO.	BASIS OF VALUATION	HELD VALUE	BASIS	PORT OF ENTRY AND MERCHANDISE
R81/104	Re, C.J. March 19, 1981	Regal Accessories, Inc.	71-4-00910, etc.	Export value	Appraised values shown on entry papers less additions included in appraised values to reflect currency revaluation	C.B.S. Imports Corp. v. U.S. (C.D. 4739)	New York Wearing apparel, etc.
R81/105	Re, C.J. March 19, 1981	Regal Accessories, Inc.	76-2-00512	Export value	Appraised values shown on entry papers less additions included in appraised values to reflect currency revaluation	C.B.S. Imports Corp. v. U.S. (C.D. 4739)	New York Wearing apparel, etc.
R81/106	Re, C.J. March 19, 1981	Regal Accessories, Inc.	76-12-02658	Export value	Appraised values shown on entry papers less additions included in appraised values to reflect currency revaluation	C.B.S. Imports Corp. v. U.S. (C.D. 4739)	New York Wearing apparel, etc.
R81/107	Re, C.J. March 19, 1981	Rhodia Inc.	76-9-02043	Export value	Appraised values shown on entry papers less additions included in appraised values to reflect currency revaluation	C.B.S. Imports Corp. v. U.S. (C.D. 4739)	New York Wearing apparel, etc.

R81/108	Re, C.J. March 19, 1981	United Merchants & Mfrs., Inc.	76-9-02117, etc.	Export value	Appraised values shown on entry papers less additions included in appraised values to reflect currency revaluation	C.B.S. Imports Corp. v. U.S. (C.D. 4739)	New York Wearing apparel, etc.
R81/109	Maletz, J. March 19 1981	C. Itoh Electronics, Inc.	79-2-00337	Export value	$24.50 a unit	Agreed statement of facts	Los Angeles Certain printing mechanisms, model No. 310
R81/110	Newman, J. March 19, 1981	Gehrig, Hoban & Co., Inc	R69/8834, etc.	United States value	Determined by adding to f.o.b. unit invoice price in Swiss francs converted to a dollar value at rate of exchange in effect at time of entry (the "claimed value"), 53% of difference between claimed value and appraised value	Agreed statement of facts	New York Machine tools and accessories and parts thereof
R81/111	Re, C.J. March 20, 1981	Campus Sweater & Sportswear Company	74-4-01002	Export value	Appraised values shown on entry papers less additions included in appraised values to reflect currency revaluation	C.B.S. Imports Corp. v. U.S. (C.D. 4739)	Greenville-Spartanburg (Charleston) Various articles
R81/112	Re, C.J. March 20, 1981	Cohn Hall Marx Div., of United Merchants & Mfrs., Inc.	77-3-00399	Export value	Appraised values shown on entry papers less additions included in appraised values to reflect currency revaluation	C.B.S. Imports Corp. v. U.S. (C.D. 4739)	Honolulu Wearing apparel, etc.

DECISION NUMBER	JUDGE & DATE OF DECISION	PLAINTIFF	COURT NO.	BASIS OF VALUATION	HELD VALUE	BASIS	PORT OF ENTRY AND MERCHANDISE
R81/113	Re, C.J. March 20, 1981	W. T. Grant Co.	74-5-01196	Export value	Appraised values shown on entry papers less additions included in appraised values to reflect currency revaluation	C.B.S. Imports Corp. v. U.S. (C.D. 4739)	New York Wearing apparel, etc.
R81/114	Re, C.J. March 20, 1981	Holly Stores Inc.	74-2-00513, etc.	Export value	Appraised values shown on entry papers less additions included in appraised values to reflect currency revaluation	C.B.S. Imports Corp. v. U.S. (C.D. 4739)	New York Wearing apparel, etc.
R81/115	Re, C.J. March 20, 1981	Holly Stores Inc.	77-11-04681	Export value	Appraised values shown on entry papers less additions included in appraised values to reflect currency revaluation	C.B.S. Imports Corp. v. U.S. (C.D. 4739)	New York Wearing apparel, etc.

Judgment of the United States Court of International Trade

March 16, 1981

APPEAL 80–9.—Westway Trading Corp. *v.* United States.— RAW SUGAR—EXEMPTION FROM INCREASED DUTY—DATE OF EXPORTATION—PRESIDENTIAL PROCLAMATION—SUMMARY JUDGMENT.—C.D. 4826 affirmed October 30, 1980 (C.A.D. 1254).

Appeal to United States Court of Customs and Patent Appeals

APPEAL 81–12.—Royal Business Machines, Inc. *v.* The United States, et al. (SCM Corporation, Intervenor)—PORTABLE ELECTRIC TYPEWRITER—WITHHOLDING OF APPRAISEMENT NOTICE—ANTIDUMPING DUTY ORDER—RETROACTIVE INCLUSION—SUMMARY JUDGMENT—TSUS—Appeal from Slip Op. 80–16.

In this case, the Department of Treasury caused a notice of Withholding of Appraisement to be published in the Federal Register on January 4, 1980, which was limited to portable electric typewriters, as provided for in item 676.0510 of the Tariff Schedules of the United States Annotated (45 F.R. 122022). Also, the Department of Commerce caused a final antidumping order to be published on May 9, 1980, directing U.S. Customs officers to assess dumping duties on all entries subject to the "Withholding of Appraisement" notice published in the Federal Register on January 4, 1979 (45 F.R. 1220–2), and all future entries until further notice, and limited the scope of the order by stating that "the term 'portable electric typewriters' are those provided for in item 676.0510 of the Tariff Schedules of the United States annotated" (45 F.R. 30618–19).

Plaintiff-appellant imported a trypewriter known as the Royal Administrator during the period of Jaunuary 4, 1980, through May 9, 1980, and contended before the International Trade Commission and Commerce that the typewriter is not properly classifiable under item 676.0510, TSUS, and, therefore, is not within the scope of the notice of Withholding of Appraisement and the final antidumping order, supra; that the headquarters, U.S. Customs Service issued a ruling on August 7, 1980, stating in part that the Royal Administrator is properly classifiable under item 676.0540, TSUS, and, therefore, is not within the scope of the antidumping order, supra; that the District Director at the Port of Los Angeles has refused to cancel bonds posted by plaintiff-appellant for the estimated antidumping duties on the entries of the typewriter, and has not liquidated the entries and advises that the current importations of the Royal Administrator would be subject to the requirement of the tender of cash deposits of estimated dumping duties; that Commerce has refused to acknowledge the nonincludability of the typewriter in its

antidumping duty order; that Commerce has manifested an intention to retroactively include the Royal Administrator in its antidumping order; that the retroactive inclusion of the typewriter in the antidumping order woud be contrary to law since it is classifiable under item 676.0510, TSUS; that Commerce's description of the merchandise, pursuant to section 736(a)(2) of the Tariff Act of 1930, does not include the Royal Administrator; that the provisions of section 516(a), (19 U.S.C. 1516a) preclude any interested party from contesting any matter contained in the final antidumping duty order after 30 days after the publishing of such order; that Commerce cannot retroactively amend the antidumping duty order to expand its scope, nor can it order the assessment of antidumping duties on merchandise which is beyond the scope of such order; that plaintiff-appellant will suffer irreparable harm and injury if the antidumping order, supra, is retroactively modified so as to include the Royal Administrator; that plaintiff-appellant filed a motion with the U.S. Court of International Trade requesting it to issue a temporary restraining order and preliminary injunction enjoining defendants-appellees from conducting further antidumping proceedings with respect to the Royal Administrator, and to issue a writ of mandamus ordering defendants-appellees to cancel all antidumping bonds on current entries of the typewriter between January 4 and May 1980, and to remove the typewriter from the list of machines subject to the Withholding of Appraisement notice published in the Federal Register on January 4, 1980, and May 9, 1980. Defendants-appellees, and the intervenor, SCM Corp., filed motions in opposition and cross-motions to dismiss for lack of jurisdiction and summary judgment.

It is claimed that the U.S. Court of International Trade erred in denying plaintiff-appellant's motion for preliminary injunction and writ of mandamus and further erred in granting defendants-appellees' and the intervenor's cross-motions for dismissal for lack of jurisdiction. Plaintiff-appellant seeks review, pursuant to the provisions of sections 1541(a), 2601(a), and 2601(b), of title 28, United States Code, and to that end requests the court to issue such orders, and grant such relief, as the statute provides and to the court shall seem just.

International Trade Commission Notices

Investigations by the U.S. International Trade Commission

DEPARTMENT OF THE TREASURY, *April 2, 1981.*

The appended notices relating to investigations by the U.S. International Trade Commission are published for the information of Customs officers and others concerned.

R. E. CHASEN,
Commissioner of Customs.

In the Matter of CERTAIN FOOD SLICERS AND COMPONENTS THEREOF	Investigation No. 337–TA–76

Notice of Termination of Crest Industries Corp. as Respondent

AGENCY: U.S. International Trade Commission.

ACTION: Termination of Crest Industries Corp., as a party respondent in the above-captioned investigation.

SUMMARY: Having determined that this matter is properly before the Commission and having reviewed the record in this investigation, the Commission on ———— terminated Crest Industries Corp., as a party respondent in investigation No. 337–TA–76.

SUPPLEMENTARY INFORMATION: This investigation under section 337 of the Tariff Act of 1930 (19 U.S.C. 1337) concerns alleged infringement of U.S. Letters Patent 3,766,817 by respondents E. Mishan & Sons, Albert E. Price, Inc., Crest Industries Corp., and Taiwan Timing Trading Co. The Commission instituted the investigation on December 4, 1979, and published notice thereof in the Federal Register of December 21, 1979 (44 F.R. 75733). On August 1, 1980, complainant Prodyne Enterprises, Inc., entered into a licensing agreement with respondent Crest Industries Corp. The Commission published notice that it was considering terminating Crest as a respondent in the above-captioned investigation in the Federal

Register of January 14, 1981 (46 F.R. 3391), along with the text of the licensing agreement, and requested comments from certain Government agencies pursuant to 19 CFR 210.14(a)(2). No comments were received from the public or the parties. No Government agency objected to terminating the investigation as to Crest on the basis of the licensing agreement.

Any party wishing to petition for reconsideration of the Commission's action must do so within 14 days of service of the Commission Action and Order. Such petitions must be in accord with section 210.56 of the Commission's Rules of Practice and Procedure (19 CFR 210.56).

Copies of the Commission Action and Order in this matter and any other public documents in this investigation are available to the public during official working hours (8:45 a.m. to 5:15 p.m.) in the Office of the Secretary, U.S. International Trade Commission, 701 E Street NW., Washington, D.C. 20436, telephone 202–523–0161.

FOR FURTHER INFORMATION CONTACT: Warren H. Maruyama, Esq., Office of the General Counsel, U.S. International Trade Commission, 701 E Street NW., Washington, D.C. 20436, telephone 202–523–0143.

By order of the Commission.

Issued: March 20, 1981.

KENNETH R. MASON,
Secretary.

In the Matter of
CHLOROFLUOROHYDROCARBON DRY-CLEANING PROCESS MACHINES AND COMPONENTS THEREFOR

Investigation No. 337–TA–84

Order No. 27

Order Suspending Discovery and Amending Schedule

The Commission investigative attorney has moved orally on behalf of all parties to this investigation for an order staying discovery and rescheduling to a later date the final hearing. As grounds for the motion, the Commission investigative attorney has stated that all parties (1) have agreed in principle to a settlement of all outstanding issues and (2) have need of additional time, without the distraction and expense of concluding discovery and preparing for trial as currently scheduled, for execution of a written agreement.

The motion is received with favor in view of moving counsel's firm representations that requested additional time will result in an agreement to serve as the basis for a motion to terminate the investigation. However, the motion must be considered in the context of the applicable statutory time limits. This case is a more complicated case with a hearing deadline of June 11, 1981. While it may be possible to postpone the final hearing to a period immediately preceding that date, no further extensions are possible. The evidentiary record by Commission rule must be closed on that day.

Accordingly, the parties' request is granted as follows:

(1) Pursuant to 29 CFR 210.30(c) discovery is hereby suspended under the terms stated hereinafter;

(2) The parties shall have until the close of business April 24, 1981, to file with the Secretary a motion to terminate as to all parties on all outstanding issues;

(3) If the described motion to terminate is not timely filed, or the parties inform me that no such motion will be filed, the discovery period shall recommence immediately with compelled discovery to close on May 8, 1981; thereafter,

(4) Complainant's prehearing statement shall be due, with actual service on the parties, on or before May 12, 1981;

(5) Respondents' and the Commission investigative attorney's prehearing statement shall be due with actual service on the parties on or before May 15, 1981;

(6) The prehearing conference shall be held at 9:30 a.m., May 18, 1981, at suite 201, 1010 Wisconsin Avenue NW., Washington, D.C., with the final hearing to commence immediately thereafter and to be concluded by June 11, 1981.

It is further ordered that the Secretary shall serve a copy of this order on all parties and shall publish it in the Federal Register.

Issued: March 24, 1981.

DONALD K. DUVALL,
Presiding Officer.

Investigation No. 701-TA-68 (Final)

LEATHER WEARING APPAREL FROM URUGUAY

AGENCY: U.S. International Trade Commission.

ACTION: Continuation of investigation.

SUMMARY: On February 27, 1981, the U.S. Department of Commerce and the Government of Uruguay signed an agreement regarding this investigation in which the Government of Uruguay

agreed to eliminate completely the amount of the net subsidy found by Commerce to exist with respect to leather wearing apparel exported directly or indirectly to the United States. Accordingly, the countervailing duty investigation underway at Commerce was suspended, pursuant to section 704(f)(1) of the Tariff Act of 1930 (19 U.S.C. 1671c(f)(1)). On March 11, 1981, however, the Government of Uruguay requested that the investigations at Commerce and the Commission be continued pursuant to section 704(g)(1) of the act (19 U.S.C. 1671c(g)(1)). The Commission hereby gives notice that its investigation No. 701–TA–68 (final) is continued and that its final determination in the investigation will be made before the 45th day after the day on which the Department of Commerce makes its final subsidy determination.

EFFECTIVE DATE: March 24, 1981.

FOR FURTHER INFORMATION CONTACT: Mr. Patrick Magrath, Office of Investigations, U.S. International Trade Commission; telephone 202–523–0283.

By order of the Commission.

Issued: March 24, 1981.

KENNETH R. MASON,
Secretary.

Index

U.S. Customs Service

Treasury decisions: T.D. No.

Cotton and manmade fiber textile products—restriction on entry—The People's Republic of China 81-6
Cotton and manmade fiber textile products—restriction on entry—Taiwan 81-6
Cotton, wool, and manmade fiber textile products—restriction on entry—Singapore 81-6
Cotton, wool, and manmade fiber textile products—restriction on entry—Singapore 81-6
Customshouse broker's license—stay of revocation 81-7
Drawback contract (rate) 81-7
Feather-filled jackets, coats, and vests—restriction on entry—Taiwan 81-6
Foreign currencies—daily rates for countries not on quarterly list 81-7
Foreign currencies—variance from quarterly rate 81-7
High-security storage of certain imported firearms 81-6
Manmade fiber textile products—restriction on entry—Costa Rica 81-6
Preclearance offices in foreign countries—Customs Regulations amended 81-7
Sections 101.3 and 101.4, Customs Regulations, amended to extend the port limits of Sandusky, Ohio 81-7
Special tonnage tax and light money—Customs Regulations amended 81-7

DEPARTMENT OF THE TREASURY
U.S. CUSTOMS SERVICE
WASHINGTON, D.C. 20229

OFFICIAL BUSINESS
PENALTY FOR PRIVATE USE, $300

POSTAGE AND FEES PAID
DEPARTMENT OF THE TREASURY (CUSTOMS)
(TREAS. 552)

U.S.MAIL

U.S. GOVERNMENT PRINTING OFFICE : 1981

15/16

Customs Bulletin

Regulations, Rulings, Decisions, and Notices concerning Customs and related matters

and Decisions

of the United States Court of Customs and Patent Appeals and the United States Court of International Trade

Vol. 15 APRIL 22, 1981 No. 16

NEWARK PUBLIC LIBRARY

MAY 26 1981

U. S. GOVT. PUBS.
DEPOSITORY 376

This issue contains

T.D. 81-77 through 81-83
General Notice
C.A.D. 1261
Slip. Op. 81-28
Protest Abstracts P81/39 through P81/51
Reap. Abstracts R81/116 through R81/130
International Trade Commission Notices

THE DEPARTMENT OF THE TREASURY
U.S. Customs Service

T 1.11/3:

NOTICE

The abstracts, rulings, and notices which are issued weekly by the U.S. Customs Service are subject to correction for typographical or other printing errors. Users may notify the U.S. Customs Service, Logistics Management Division, Washington, D.C. 20229, of any such errors in order that corrections may be made before the bound volumes are published.

For sale by the Superintendent of Documents, U.S. Government Printing Office, Washington, D.C. 20402. Price: $2.25 (single copy domestic); $2.85 (single copy foreign). Subscription price: $85.00 a year domestic; $106.25 a year foreign.

U.S. Customs Service

Treasury Decisions

(T.D. 81-77)

Synopses of Drawback Decisions

The following are synopses of drawback rates issued September 6, 1979, to December 3, 1980, inclusive, pursuant to sections 22.1 through 22.5, inclusive, Customs Regulations.

In the synopses below are listed for each drawback rate approved under 19 U.S.C. 1313(d), the name of the company, the specified articles on which drawback is authorized, the merchandise which will be used to manufacture or produce these articles, the factories where the work will be accomplished, the date the statement was signed, the basis for determining payment, the Regional Commissioner to whom the rate was forwarded, and the date on which it was forwarded.

(DRA-1-09)

Dated: April 6, 1981.

MARILYN G. MORRISON,
Director,
Carriers, Drawback and Bonds Division.

(A) Company: Penick Corp.
Articles: Medicinal preparations; flavoring extracts.
Merchandise: Domestic tax-paid alcohol.
Factory: Lyndhurst, N.J.
Statement signed: June 26, 1980.
Basis of claim: Used in.
Rate forwarded to Regional Commissioner of Customs: New York, August 14, 1980.

(B) Company: Sethness Greenleaf, Inc.
Articles: Flavoring extracts.
Merchandise: Domestic tax-paid alcohol.
Factory: Chicago, Ill.

Statement signed: October 1, 1979.
Basis of claim: Used in.
Rate forwarded to Regional Commissioner of Customs: Chicago, May 13, 1980.

(C) Company: Tobacco Technology Inc.
Articles: Flavoring extract for tobacco (essential oil MPC 404–33).
Merchandise: Domestic tax-paid ethyl alcohol (190 proof).
Factory: Upperco, Md.
Statement signed: August 10, 1979.
Basis of claim: Used in.
Rate forwarded to Regional Commissioner of Customs: Baltimore, September 6, 1979.

(D) Company: Warner-Jenkinson Co., a division of the Seven-Up Co.
Articles: Flavoring extract known as No. 3272 diet lemon-line.
Merchandise: Domestic tax-paid alcohol.
Factory: St. Louis, Mo.
Statement signed: May 28, 1980.
Basis of claim: Used in.
Rate forwarded to Regional Commissioner of Customs: New York, December 3, 1980.

(E) Company: Warner-Jenkinson Co., a division of the Seven-Up Co.
Articles: Flavoring extract known as No. 725 lemon-lime.
Merchandise: Domestic tax-paid alcohol.
Factory: St. Louis, Mo.
Statement signed: March 21, 1980.
Basis of claim: Used in.
Rate forwarded to Regional Commissioner of Customs: New York, December 3, 1980.

(T.D. 81–78)

Synopses of Drawback Decisions

The following are synopses of drawback rates issued November 19, 1980, to December 18, 1980, inclusive, pursuant to sections 22.1 through 22.5, inclusive, Customs Regulations.

In the synopses below are listed for each drawback rate approved under 19 U.S.C. 1313(b), the name of the company, the specified articles on which drawback is authorized, the merchandise which will be used to manufacture or produce these articles, the factories where the work will be accomplished, the date the statement was signed, the

basis for determining payment, the Regional Commissioner to whom the rate was forwarded, and the date on which it was forwarded.

(DRA-1-09)

Dated: April 6, 1981.

MARILYN G. MORRISON,
Director,
Carriers, Drawback and Bonds Division.

(A) Company: Alpha Tube Corp.
Articles: Steel tubes.
Merchandise: Hot-rolled, cold-rolled, galvanized or aluminized steel sheet, strip, and blanks.
Factory: Holland, Ohio.
Statement signed: April 2, 1980.
Basis of claim: Appearing in.
Rate forwarded to Regional Commissioner of Customs: New York, December 8, 1980.

(B) Company: Beatrice Foods Co., Sanna Division.
Articles: Nondairy creamer.
Merchandise: Refined coconut oil.
Factories: Vesper and Menomonie, Wis.
Statement signed: August 19, 1980.
Basis of claim: Used in.
Rate forwarded to Regional Commissioner of Customs: Los Angeles, December 2, 1980.

(C) Company: Campbell Soup Co.
Articles: Canned and frozen food products.
Merchandise: Monosodium glutamate.
Factories: Various factories as listed in manufacturer's statement.
Statement signed: September 4, 979.
Basis of claim: Appearing in.
Rate forwarded to Regional Commissioner of Customs: Baltimore, December 1, 1980.

(D) Company: Caulkins Indiantown Citrus Co.
Articles: Frozen concentrated orange juice and orange juice drink base.
Merchandise: Concentrated orange juice for manufacturing.
Factory: Indiantown, Fla.
Statement signed: December 2, 1980.
Basis of claim: Used in.

Rate forwarded to Regional Commissioner of Customs: Miami, December 16, 1980.

(E) Company: Coca-Cola Bottling Co. of New England.
Articles: Coca-Cola and other soft drinks in cans or bottles.
Merchandise: Flavoring sirups.
Factory: Needham Heights, Mass.
Statement signed: January 10, 1980.
Basis of claim: Appearing in.
Rate forwarded to Regional Commissioners of Customs: Boston, New York, and Miami, December 10, 1980.

(F) Company: The Coca-Cola Co.
Articles: Frozen and unfrozen citrus juice concentrates; frozen and unfrozen concentrated ades and drinks; unfrozen, single strength fruit drinks; and other similar juice and drink products.
Merchandise: Refined sugar; orange, grapefruit, lemon, tangerine, lime, and grape juice concentrate in bulk; single strength orange juice in bulk; natural orange essence.
Factories: Auburndale, Forest City, Leesburg, and Plymouth, Fla.; Anaheim, Calif.; Hightstown, N.J.; Geneva, Ohio; Paw Paw, Mich.
Statement signed: June 16, 1980.
Basis of claim: Appearing in.
Rate forwarded to Regional Commissioner of Customs: Miami, December 15, 1980.
Revokes: T.D. 79–192–E.

(G) Company: Combustion Engineering, Inc.
Articles: Fossil and/or nuclear powered steam generating boilers and parts thereof.
Merchandise: Forgings, fittings, castings, plates, structured shapes, rods, bars, strips, sheets, and plated metal components.
Factories: Various factories as listed in manufacturer's statement.
Statement signed: June 20, 1980.
Basis of claim: Appearing in.
Rate forwarded to Regional Commissioner of Customs: New York, November 21, 1980.

(H) Company: Copperweld Corp.
Articles: Aluminum covered steel wire and strand; aluminum covered steel wires, stranded together with solid aluminum wires.
Merchandise: Iron or steel rods, plain or aluminum coated; iron or steel wire, plain or aluminum coated.
Factory: Oswego, N.Y.
Statement signed: April 8, 1980.

Basis of claim: Appearing in.
Rate forwarded to Regional Commissioners of Customs: New York and Baltimore, December 1, 1980.

(I) Company: Continental Grain Co.
Articles: Linseed oil and linseed meal.
Merchandise: Flax seed.
Factory: Culbertson, Mont.
Statement signed: November 14, 1980.
Basis of claim: Used in, with distribution to the products obtained, in accordance with their relative value at the time of separation.
Rate forwarded to Regional Commissioner of Customs: New York, December 3, 1980.

(J) Company: Data General Corp.
Articles: Computer systems, computer subsystems, and peripheral computer equipment.
Merchandise: Printed circuit board products.
Factories: Southboro, Mass.; Westbrook, Maine; Cary, N.C.; Portsmouth, N.H.; Austin, Tex.
Statement signed: September 9, 1980.
Basis of claim: Appearing in.
Rate forwarded to Regional Commissioner of Customs: San Francisco, December 18, 1980.
Revokes: T.D. 80–122–I.

(K) Company: Eddyleon Chocolate Co., Inc.
Articles: Confectionery products.
Merchandise: Extra-fine hard refined sugar: fruit sugar; sanding hard refined sugar; and hard refined confectionery sugar.
Factory: Garden City, N.Y.
Statement signed: April 17, 1980.
Basis of claim: Used in.
Rate forwarded to Regional Commissioner of Customs: New York, December 16, 1980.

(L) Company: Eastman Kodak Co.
Articles: Coupler intermediates.
Merchandise: O-chloroaniline.
Factories: Kingsport, Tenn.; Batesville, Ark.
Statement signed: July 10, 1980.
Basis of claim: Used in.
Rate forwarded to Regional Commissioner of Customs: Baltimore, November 19, 1980.

(M) Company: Eastman Kodak Co.
Articles: Triethyl phosphate.
Merchandise: Phosphorus pentoxide (phosphoric anhydride).
Factory: Kingsport, Tenn.
Statement signed: September 17, 1980.
Basis of claim: Used in.
Rate forwarded to Regional Commissioner of Customs: Baltimore, December 16, 1980.

(N) Company: Garfield Industries, Inc.
Articles: Buffing wheels.
Merchandise: Piece goods.
Factory: Fairfield, N.J.
Statement signed: October 1, 1980.
Basis of claim: Used in.
Rate forwarded to Regional Commissioner of Customs: New York, December 15, 1980.

(O) Company: General Tire & Rubber Co.
Articles: Steel tire cord; rubber tires; steel tire cord, creel or woven and coated.
Merchandise: Steel tire cord.
Factories: Various factories as listed in manufacturer's statement.
Statement signed: August 12, 1980.
Basis of claim: Appearing in.
Rate forwarded to Regional Commissioner of Customs: Chicago, December 5, 1980.
Revokes: T.D. 74–253–V.

(P) Company: B. F. Goodrich Co.
Articles: Polymer chemicals and commodities.
Merchandise: Para nitroaniline.
Factories: Akron, Ohio; Henry, Ill.
Statement signed: October 7, 1980.
Basis of claim; Appearing in.
Rate forwarded to Regional Commissioner of Customs: Baltimore, December 9, 1980.
Revokes: T.D. 78–258–N.

(Q) Company: H & H Tube & Manufacturing Co.
Articles: Brass and copper lockseam tubing.
Merchandise: Brass and copper sheet, strip and foil.
Factory: Cheboygan, Mich.
Statement signed: July 30, 1980.

Basis of claim: Appearing in.
Rate forwarded to Regional Commissioner of Customs: New York, November 25, 1980.

(R) Company: Kama Corp.
Articles: Polystyrene sheets (oriented).
Merchandise: Styrene monomer.
Factory: Hazleton, Pa.
Statement signed: September 9, 1980.
Basis of claim: Used in.
Rate forwarded to Regional Commissioner of Customs: Baltimore, November 21, 1980.

(S) Company: Mobay Chemical Corp., Agricultural Chemicals Division.
Articles: Guthion 50 W.P. (wettable powder)—insecticide.
Merchandise: Guthion technical.
Factory: Kansas City, Mo.
Statement signed: October 17, 1980.
Basis of claim: Used in.
Rate forwarded to Regional Commissioner of Customs: Chicago, December 12, 1980.
Revokes: T.D. 76–235–H.

(T) Company: Modine Manufacturing Co.
Articles: Heat exchangers, radiators, coolers, and other heat transfer products and parts.
Merchandise: Copper and copper alloy sheet, strip and plate; copper tube; brass tube; brass alloy sheet, strip, plate, and tube.
Factories: Emporia, Kans.; Paducah, Ky.; Trenton, Mich.; Whittier, Calif.; Pemberville, Ohio; Bloomington, Ill.
Statement signed: September 24, 1980.
Basis of claim: Appearing in.
Rate forwarded to Regional Commissioner of Customs: Chicago, November 21, 1980.
Revokes: T.D. 56318–F, as amended by T.D. 56417–E and T.D. 67–14–P.

(U) Company: Rohm and Haas Delaware Valley, Inc.
Articles: Postemergence herbicides.
Merchandise: Blazer technical.
Factory: Philadelphia, Pa.
Statement signed: September 30, 1980.
Basis of claim: Used in.

338-819 O - 81 - 2

Rate forwarded to Regional Commissioner of Customs: Baltimore, December 18, 1980.
Revokes: T.D. 80–280–T.

(V) Company: Rohm and Haas Texas Inc.
Articles: Oil additives (pour depressants).
Merchandise: Cetyl-stearyl alcohol (C16/C18).
Factory: Deer Park, Tex.
Statement signed: April 24, 1980.
Basis of claim: Used in.
Rate forwarded to Regional Commissioner of Customs: Baltimore, November 24, 1980.

(W) Company: Sandoz, Inc.
Articles: Leucopure EGM.
Merchandise: NAPOF.
Factory: Fair Lawn, N.J.
Statement signed: October 27, 1980.
Basis of claim: Used in.
Rate forwarded to Regional Commissioner of Customs: New York, December 1, 1980.

(X) Company: Sunstar Foods, Inc., citrus division.
Articles: Concentrated orange juice, concentrated grapefruit juice, and concentrated drink base.
Merchandise: Concentrated orange juice for manufacturing and concentrated grapefruit juice for manufacturing.
Factory: Lakeland, Fla.
Statement signed: September 24, 1980.
Basis of claim: Used in.
Rate forwarded to Regional Commissioner of Customs: Miami, December 12, 1980.

(Y) Company: Teledyne Wah Chang Albany.
Articles: Titanium and titanium alloy products as follows: sponge-blends, pure titanium only; ingot; forging; round and square bar; wire; extrusions; plate; sheet; strip; foil; tubing; powder.
Merchandise: Titanium metal content of commercial grade titanium tetrachloride; titanium sponge; titanium ingot.
Factory: Albany, Oreg.
Statement signed: July 30, 1980.
Basis of claim: Appearing in.
Rate forwarded to Regional Commissioner of Customs: San Francisco, November 26, 1980.

(Z) Company: Union Carbide Corp.
Articles: Graphite electrodes.
Merchandise: Calcined petroleum coke.
Factory: Columbia, Tenn.
Statement signed: November 5, 1980.
Basis of claim: Used in.
Rate forwarded to Regional Commissioner of Customs: New York, December 12, 1980.

(T.D. 81–79)

American Manufacturer's Petition

Decision denying American manufacturer's petition requesting reclassification of footwear known as moon boots: Petitioner's desire to contest this decision

AGENCY: U.S. Customs Service, Department of the Treasury.

ACTION: Notice of (1) decision on American manufacturer's petition, and (2) receipt of notice of petitioner's desire to contest this decision.

SUMMARY: In response to an American manufacturer's petition requesting that certain waterproof footwear known as moon boots be reclassified under the provision for other footwear which is over 50 percent by weight of rubber or plastics (except footwear having uppers of which over 50 percent of the exterior surface area is leather) in item 700.60, Tariff Schedules of the United States (TSUS), Customs advised the petitioner that the particular moon boots in question, as well as footwear of the same class or kind, would continue to be classified under the provision for other footwear which is over 50 percent by weight of rubber or plastics and having uppers of which over 90 percent of the exterior surface area is rubber or plastics (except footwear having foxing or foxing-like band applied or mold at the sole and overlapping the upper) in item 700.58, TSUS. Upon being informed that its petition had been denied, the petitioner filed notice of its desire to contest the decision in accordance with section 516 of the Tariff Act of 1930, as amended.

FOR FURTHER INFORMATION CONTACT: Donald F. Cahill, Classification and Value Division, U.S. Customs Service, 1301 Constitution Avenue NW., Washington, D.C. 20229; 202–566–8181.

SUPPLEMENTARY INFORMATION:

BACKGROUND

A petition was filed under section 516, Tariff Act of 1930, as amended (19 U.S.C. 1516), by Prevue Products, Inc., Manchester, N.H., an

American manufacturer, requesting that certain waterproof footwear known as moon boots be reclassified under the provision for other footwear which is over 50 percent by weight of rubber or plastics (except footwear having uppers of which over 50 percent of the exterior surface area is leather) in item 700.60, Tariff Schedules of the United States (TSUS) (19 U.S.C. 1202), dutiable at the rate of 20 percent ad valorem and subject to an American selling price (ASP) basis of valuation (headnote 3(b), schedule 7, subpart 1A, TSUS). In the alternative, the petitioner argued for reclassification under the provision for other protective footwear which is over 50 percent by weight of rubber or plastics and having soles and uppers of which over 90 percent of the exterior surface area is rubber or plastics (except footwear with uppers of nonmolded construction formed by sewing the parts thereof together and having exposed on the outer surface a substantial portion of functional stitching) in item 700.53, TSUS, dutiable at the rate of 37.5 percent ad valorem.

In support of its contention, the petitioner describes the footwear involved as a moon boot which extends above the ankle and is designed to be worn over, or in lieu of other footwear as a protection against water, cold, or inclement weather, is over 50 percent by weight of rubber or plastics, has soles and uppers of which over 90 percent of the exterior surface area is rubber or plastics, and has a premolded rubber/plastic shell bottom, the sides of which extend upward from the bottom of the boot to above the insole of the boot. The sides of the premolded shell bottom are sewed to, and overlap by approximately one-half inch the polyurethane top portion of the boot.

Notice of the petition was published in the Federal Register on January 30, 1980 (45 F.R. 6881). This notice advised that importations of the moon boots involved were being classified under the provision for other footwear which is over 50 percent by weight of rubber or plastics and having uppers of which over 90 percent of the exterior surface area is rubber or plastics (except footwear having uppers of which over 50 percent of the exterior surface area is leather or footwear having foxing or foxing-like band applied or molded at the sole and overlapping the upper) in item 700.58, TSUS, dutiable at the rate of 6 percent ad valorem.

DECISION ON PETITION AND RECEIPT OF PETITIONER'S NOTICE OF DESIRE TO CONTEST

The first issue to be resolved is whether the instant footwear has a foxing or foxing-like band applied or molded at the sole which overlaps the upper and which would preclude classification under item 700.58, TSUS.

The term "foxing" has been defined as follows:

> shoe upper material forming or covering the lower part of the quarter of a shoe. With rubber soled canvas upper shoes, foxing is usually a strip of rubber covering and securing the joint between sole and upper.

"The Art and Science of Footwear Manufacturing" (American Footwear Industries Association, 1974).

> a piece of leather put on the upper leather of the shoe along the edge next to the sole

"Funk and Wagnalls New Practical Standard Dictionary" (1956).

> a piece of material applied to the upper or extending around the outsole of a boot or a shoe

"Websters' Third International Dictionary" (1961).

A reading of the exclusionary language in item 700.58, TSUS, taken in conjunction with the definitions cited above for foxing leaves no doubt in our mind that the function of foxing is to reinforce or supplement the juncture between the sole and upper of footwear.

Customs previously has ruled that for the purposes of computing the exterior surface area of an upper, the upper is everything from just below the insole level. Our position as to what constitutes an upper for tariff purposes is logical and we see no reason why the same concept cannot be used or should not be used with respect to the use of that term in the exclusionary clause in item 700.58, TSUS. It appears to us that the application of a different definition for the term "upper" in this situation is unwarranted and certainly would be inconsistent with previous rulings.

With respect to the moon boots in issue, that juncture which a foxing must reinforce or supplement in order to preclude classification under item 700.58, TSUS, is at a point just below the insole level. However, the uppers of the moon boots involved do not extend down to this point; thus, the sides of the shell bottom do not overlap the upper at this point, and consequently, they do not meet the exclusionary requirement of overlapping the upper.

Even if we assume that the overlapping need not occur at the juncture of the sole and upper, the stitching of the sides of the premolded bottoms to the polyurethane upper is not the overlapping contemplated by the statute because the stitching merely attaches the materials to each other and is not in the nature of reinforcement. In addition, the ¼-inch overlap in the case of the instant moon boots is necessary to effect a joinder of the materials and does not constitute a reinforcement.

Customs has held that the exclusionary language in item 700.58, TSUS, applies to a moon boot similar in all material respects to the

moon boot in issue except that the upper was stitched to the sock lining and was complete before the attachment of the shell bottom. The petitioner, in view of our position that this type construction represents a molded foxing, urges that even if the sides of the shell bottoms of the moon boots in issue do not precisely meet the definition of foxing, they certainly qualify as a foxing-like band. He maintains that the terms "foxing" and "foxing-like band" do not encompass the same articles because it is presumed that Congress did not use meaningless language in its tariff acts. Further, the petitioner maintains that the term "foxing-like band" was intended to pertain to bands which although technically not foxing, were nevertheless of such similar design that they also qualify under the parenthetical exception of item 700.58, TSUS.

The term "foxing-like band" has to our knowledge never been defined. In the past, Customs has treated as a foxing-like band any band which simulated the function of conventional foxing.

It is apparent from a visual examination of a sample of the moon boot in issue that the sides of the shell bottom do not simulate a reinforcement of the juncture between the sole and upper and they do not simulate a reinforcement of the stitching that joins them to the polyurethane upper. Thus, the sides of the premolded shell bottoms constitute neither a foxing nor a foxing-like band within the purview of the exclusionary language in item 700.58, TSUS.

The second issue to be resolved is whether the moon boots in issue are precluded from classification under item 700.53, TSUS, by having "uppers of nonmolded construction formed by sewing the parts thereof together and having exposed on the outer surface a substantial portion of functional stitching" as found in the exclusionary language to that provision.

The petitioner urges that because the uppers of the moon boots involved consist of both molded and nonmolded material that the moon boots are not precluded from classification under item 700.53, TSUS. He further asserts that in order to be excluded from classification under item 700.53, TSUS, the entire upper, and not simply a part of the upper, must be of nonmolded construction. In view of the fact that a portion of the premolded shell of the boot forms a part of the upper, the petitioner concludes that classification under item 700.53, TSUS, is proper, and that such classification would preclude classification under item 700.58, TSUS.

The petitioner relies heavily on the case of *International Seaway Trading Corp.* v. *United States*, 69 Cust. Ct. 144, C.D. 4385 (1972), to support his position. The footwear involved in that case is described as follows:

> The imported boots, composed of rubber, are formed by placing a number of differently shaped pieces of rubber material

upon a textile boa (lining) which has been stretched tight upon a metal last. While most of the rubber pieces adhere to the boa either by means of self-adhering quality (tackiness) or by means of an adhesive applied to them before being mounted on the last, some of the pieces comprising the upper portion of the boot are stitched together before placement upon the boa. (It is this phase of the process, namely, the stitching in the upper that remains visible in the finished boot, which centers the present controversy.) When all the pieces of rubber are fully assembled on the last the last is inserted into an autoclave where the boot is vulcanized. And after vulcanization, the boot is trimmed, inspected, and packed for shipment.

The court rejected plaintiff's claim that the woodmen's boots came within the exclusionary language of item 700.53, TSUS, because the boots were formed by vulcanization rather than by sewing the parts together.

The basic difference between the boots in the *International Seaway* case and the moon boots in issue is that with the *Seaway* boots vulcanization was the force that held the parts together and not the stitching, whereas the uppers of the instant moon boots are not formed by vulcanization or molding but are stitched together with the stitching exposed. In the case of the moon boots it is clearly the stitching which is the force which holds the parts together.

The petitioner states that "the importance of the *International Seaway* case is to be found in the U.S. Customs Court's legal, not factual conclusions." He points out that the court held that the exclusionary language involved must be strictly construed. Further, "the teaching of the *International Seaway* case is that footwear falling short in any respect to the specifically designated prerequisites set forth in the nonmolded parenthetical exception cannot escape tariff classification under items 700.51–700.53."

We agree with the petitioner that the exclusionary language involved must be strictly construed. However, the interpretation urged by the petitioner is overly restrictive. It is our view that the boots in issue fall squarely within the parenthetical exception to item 700.53, TSUS. We note that the exclusionary language to item 700.53, TSUS, requires that the uppers be of nonmolded construction. However, there is no requirement that the material comprising the parts of the uppers be of nonmolded construction. In this instance all the parts are nonmolded except that portion of the shell bottom sides extending upward from just below the insole level which is considered to be a part of the upper. Even that molded part of the upper is stitched to the upper thus, satisfying the requirement that the upper be formed by sewing the parts together. In conclusion, the uppers are formed and held together by functional stitching and not by molding or vulcanization and consequently, are considered to be of nonmolded construction.

For the reasons stated above, by letter of December 10, 1980, file No. 062909, the petitioner was advised that his petition was denied and that the practice of classifying the moon boots under item 700.58, TSUS, would be continued.

In response, by letter dated December 30, 1980, the petitioner filed notice of its desire to contest this decision in accordance with section 516(c), Tariff Act of 1930, as amended (19 U.S.C. 1516(c)), and section 175.23, Customs Regulations (19 CFR 175.23). However, under section 516(d), Tariff Act of 1930, as amended (19 U.S.C. 1516(d)), the current Customs practice of classifying this type of moon boot under item 700.58, TSUS, will continue so long as no decision of the U.S. Court of International Trade or the U.S. Court of Customs and Patent Appeals not in harmony with this practice is published.

AUTHORITY

This notice is being published in accordance with section 516(c), Tariff Act of 1930, as amended (19 U.S.C. 1516(c)), and section 175.24, Customs Regulations (19 CFR 175.24).

DRAFTING INFORMATION

The principal author of this document was Barbara E. Whiting, Regulations and Information Division, Office of Regulations and Rulings, U.S. Customs Service. However, personnel from other Customs offices participated in its development.

Dated: April 8, 1981.

WILLIAM T. ARCHEY,
Acting Commissioner of Customs.

[Published in the Federal Register April 13, 1981 (46 F.R. 21741)]

(T.D. 81-80)

Cotton and ManMade Fiber Textile Products—Restriction on Entry

Restriction on entry of cotton and manade fiber textile products manufactured or produced in Mexico

There is published below a directive of August 27, 1980, received by the Commissioner of Customs from the chairman, Committee

for the Implementation of Textile Agreements, concerning restriction on entry of cotton and manmade fiber textile products in categories 352 and 650 manufactured or produced in Mexico. This directive amends, but does not cancel, that committee's directive of December 18, 1979 (T.D. 80–53).

This directive was published in the Federal Register on September 2, 1980 (45 F.R. 58181), by the committee.

(QUO–2–1)

Dated: April 8, 1981.

WILLIAN D. SLYNE
(For Richard R. Rosettie, Acting
Director, Duty Assessment Division).

U.S. DEPARTMENT OF COMMERCE,
INTERNATIONAL TRADE ADMINISTRATION,
Washington, D.C., August 27, 1980.

Committee for the Implementation of Textile Agreements

COMMISSIONER OF CUSTOMS,
Department of the Treasury,
Washington, D.C.

DEAR MR. COMMISSIONER: This directive further amends, but does not cancel, the directive issued to you on December 18, 1979, by the chairman, Committee for the Implementation of Textile Agreements, concerning imports into the United States of certain cotton and manmade fiber textile products, produced or manufactured in Mexico.

Under the terms of the Arrangement Regarding International Trade in Textiles done at Geneva on December 20, 1973, as extended on December 15, 1977; pursuant to the Bilateral Cotton, Wool and Man-Made Fiber Textile Agreement of February 26, 1979, as amended, between the Governments of the United States and Mexico; and in accordance with the provisions of Executive Order 11651 of March 3, 1972, as amended by Executive Order 11951 of January 6, 1977, you are directed to prohibit, effective on September 2, 1980, and for the 12-month period beginning on January 1, 1980, and extending through December 31, 1980, entry into the United States for consumption and withdrawal from warehouse for consumption, of cotton and manmade fiber textile products in categories 352 and 650, produced or manu-

338-819 O - 81 - 3

factured in Mexico and exported on and after January 1, 1980, in excess of the following levels of restraint.

Category	*12-month level of restraint* [1]
352	181,818 dozen
650	29,412 dozen

Textile products in categories 352 and 650 which have been exported to the United States prior to January 1, 1980, shall not be subject to this directive.

Textile products in categories 352 and 650 which have been released from the custody of the U.S. Customs Service under the provisions of 19 U.S.C. 1448(b) or 1484(a)(1)(A) prior to the effective date of this directive shall not be denied entry under this directive.

A detailed description of the textile categories in terms of TSUSA numbers was published in the Federal Register on February 28, 1980 (45 F.R. 13172), as amended on April 23, 1980 (45 F.R. 27463).

In carrying out the above directions, entry into the United States for consumption shall be construed to include entry for consumption into the Commonwealth of Puerto Rico.

The actions taken with respect to the Government of Mexico and with respect to imports of cotton and manmade fiber textile products from Mexico have been determined by the Committee for the Implementation of Textile Agreements to involve foreign affairs functions on the United States. Therefore, these directions to the Commissioner of Customs, which are necessary for the implementation of such actions fall within the foreign affairs exception to the rulemaking provisions of 5 U.S.C. 553. This letter will be published in the Federal Register.

Sincerely,

PAUL T. O'DAY,
Chairman, Committee for the
Implementation of Textile Agreements.

(T.D. 81-81)

Cotton Textile Products—Restriction on Entry

Restriction on entry of cotton textile products manufactured or produced in Pakistan

There are published below directives of August 21 and 28, 1980, received by the Commissioner of Customs from the chairman, Com-

[1] The levels of restraint have not been adjusted to reflect any imports after Dec. 31, 1979. Imports during the January-June period of 1980 have amounted to 70,777 dozen in category 352 and 23,443 dozen in category 650.

mittee for the Implementation of Textile Agreements, concerning restriction on entry of cotton textile products in certain categories manufactured or produced in Pakistan. The directives amend, but do not cancel, that committee's directive of December 20, 1979 (T.D. 80–60).

The directives were published in the Federal Register on August 26 and September 3, 1980 (45 F.R. 56859 and 45 F.R. 58390), by the committee.

(QUO–2–1)

Dated: April 8, 1981.

WILLIAM D. SLYNE
(For Richard R. Rosettie, Acting
Director, Duty Assessment Division).

U.S. DEPARTMENT OF COMMERCE,
INTERNATIONAL TRADE ADMINISTRATION,
Washington, D.C., August 21, 1980.

Committee for the Implementation of Textile Agreements

COMMISSIONER OF CUSTOMS,
Department of the Treasury,
Washington, D.C.

DEAR MR. COMMISSIONER: This directive further amends, but does not cancel, the directive issued to you on December 20, 1979, by the chairman, Committee for the Implementation of Textile Agreements, concerning imports into the United States of certain cotton textiles and cotton textile products, produced or manufactured in Pakistan.

Under the terms of the Arrangement Regarding International Trade in Textiles done at Geneva on December 20, 1973, as extended on December 15, 1977; pursuant to the Bilateral Cotton Textile Agreement of January 4 and 9, 1978, as amended, between the Governments of the United States and Pakistan; and in accordance with the provisions of Executive Order 11651 of March 3, 1972, as amended by Executive Order 11951 of January 6, 1977, you are directed to prohibit, effective on August 26, 1980, and for the 12-month period which began on January 1, 1980, and extends through December 31, 1980, entry into the United States for consumption and withdrawal from warehouse for consumption of cotton textile products in categories 331, 340, and 342, produced or manu-

factured in Pakistan, in excess of the following adjusted levels of restraint:

Category	*Adjusted 12-month levels of restraint* [1]
331	258,427 dozen pairs
340	41,667 dozen
342	61,798 dozen

Cotton textile products in category 342 which have been exported to the United States prior to Januray 1, 1980, shall not be subject to this directive.

Cotton textile products in category 342 which have been released from the custody of the U.S. Customs Service under the provisions of 19 U.S.C. 1448(b) or 1448(a)(1)(A) prior to the effective date of this directive shall not be denied entry under this directive.

The actions taken with respect to the Government of Pakistan and with respect to imports of cotton textile products from Pakistan have been determined by the Committee for the Implementation of Textile Agreements to involve foreign affairs functions of the United States.

Therefore, these directions to the Commissioner of Customs, which are necessary for the implementation of such actions, fall within the foreign affairs exception to the rulemaking provisions of 5 U.S.C. 553. This letter will be published in the Federal Register.

Sincerely,

PAUL T. O'DAY,
Chairman, Committee for the
Implementation of Textile Agreements.

U.S. DEPARTMENT OF COMMERCE,
INTERNATIONAL TRADE ADMINISTRATION,
Washington, D.C., August 28, 1980.

Committee for the Implementation of Textile Agreements

COMMISSIONER OF CUSTOMS
Department of the Treasury,
Washington, D.C.

DEAR MR. COMMISSIONER: On December 20, 1979, the chairman, Committee for the Implementation of Textile Agreements directed

---

[1] The levels of restraint have not been adjusted to reflect any imports after Dec. 31, 1979. Imports in category 342 during the January–May period of 1980 have amounted to 18,726 dozen.

you to prohibit entry for consumption, or withdrawal from warehouse for consumption during the 12-month period beginning on January 1, 1980, and extending through December 31, 1980, of cotton textile products in certain specified categories, in excess of designated level of restraint. The chairman further advised you that the levels of restraint are subject to adjustment.[1]

Under the terms of the Arrangement Regarding International Trade in Textiles done at Geneva on December 20, 1973, as extended on December 15, 1977; pursuant to the Bilateral Cotton Textile Agreement of January 4 and 9, 1978, as amended, between the Governments of the United States and Pakistan; and in accordance with the provisions of Executive Order 11651 of March 3, 1972, as amended by Executive Order 11951 of January 6, 1977, you are directed to prohibit, effective on September 3, 1980, and for the 12-month period which began on January 1, 1980, and extends through December 31, 1980, entry into the United States for consumption and withdrawal from warehouse for consumption of cotton textile products in categories 339pt., 341, and 348, produced or manufactured in Pakistan, in excess of the following adjusted levels of restraint:

Category	*Adjusted 12-month level of restraint*[2]
339pt.[3]	127,666 dozen
341	146,639 dozen
348	35,704 dozen

The actions taken with respect to the Government of Pakistan and with respect to imports of cotton textile products from Pakistan have been determined by the Committee for the Implementation of Textile Agreements to involve foreign affairs functions of the United States. Therefore, these directions to the Commissioner of Customs, which are necessary for the implementation of such actions, fall within the foreign affairs exception to the rulemaking provisions of 5 U.S.C. 553. This letter will be published in the Federal Register.

Sincerely,

PAUL T. O'DAY,
Chairman, Committee for the
Implementation of Textile Agreements.

---

[1] The term "adjustment" refers to those provisions of the Bilateral Cotton Textile Agreement of Jan. 4 and 9, 1978, as amended, between the Governments of the United States and Pakistan, which provide that: (1) Within the aggregate and group limits, specific levels of restraint may be exceeded by designated percentages; (2) specific levels may be increased for carryover and carryforward with the amount of carryforward used deducted from the level of the following year; and (3) administrative arrangements or adjustments may be made to resolve minor problems arising in the implementation of the agreement.

[2] The levels of restraint have not been adjusted to reflect any imports after Dec. 31, 1979.

[3] In category 339, only TSUSA Nos. 382.0669 and 382.0671.

(T.D. 81-82)

The table below lists rates of exchange, in U.S. dollars for certain foreign currencies, which are based upon rates certified to the Secretary of the Treasury by the Federal Reserve of New York under provisions of section 522(c), Tariff Act of 1930, as amended (31 U.S.C. 372(c)), for the information and use of Customs officers and others concerned pursuant to part 159, subpart C, Customs Regulations (19 CFR 159, subpart C).

QUARTER BEGINNING: APRIL 1, 1981 THROUGH JUNE 30, 1981

Country	Name of currency	U.S. dollars
Australia	Dollar	$1.1638
Austria	Schilling	.067476
Belgium	Franc	.029087
Canada	Dollar	.844951
Denmark	Krone	.151057
Finland	Markka	.246792
France	Franc	.201613
Germany	Deutsche mark	.476758
India	Rupee	.120919
Ireland	Pound	1.7320
Italy	Lira	.000955
Japan	Yen	.004708
Malaysia	Dollar	.438212
Mexico	Peso	.042052
Netherlands	Guilder	.431034
New Zealand	Dollar	.9160
Norway	Krone	.185977
Portugal	Escudo	.017621
Republic of South Africa	Rand	1.2507
Spain	Peseta	.011767
Sri Lanka	Rupee	.055249
Sweden	Krona	.217794
Switzerland	Franc	.521785
United Kingdom	Pound	2.2460

(LIQ-3-01-O:C:E)

Dated: April 2, 1981.

GWENN KLEIN KIRSCHNER,
Acting Chief,
Customs Information Exchange.

(T.D. 81-83)

Foreign Currencies—Variances From Quarterly Rate

The following rates of exchange are based upon rates certified to the Secretary of the Treasury by the Federal Reserve Bank of New York, pursuant to section 522(C), Tariff Act of 1930, as amended (31 U.S.C. 372(c)), and reflect variances of 5 per centum or more from the quarterly rate published in T.D. 81-13 for the following countries. Therefore, as to entries covering merchandise exported on the dates listed, whenever it is necessary for Customs purposes to convert such currency into currency of the United States, conversion shall be at the following rates.

Austria schilling:	
March 30, 1981	$0.066489
March 31, 1981	.067193
Belgium franc:	
March 30, 1981	$0.028986
March 31, 1981	.028818
Denmark krone:	
March 30, 1981	$0.151286
March 31, 1981	.150602
Finland markka:	
March 30, 1981	$0.246184
March 31, 1981	.246366
France franc:	
March 30, 1981	$0.202429
March 31, 1981	.200100
Germany deutsche mark:	
March 30, 1981	$0.476758
March 31, 1981	.473821
Indie rupee:	
March 30, 1981	$0.120337
March 31, 1981	Quarterly
Ireland pound:	
March 30, 1981	$1.7125
March 31, 1981	1.7310
Italy lira:	
March 30, 1981	$0.000953
March 31, 1981	.000948
Netherlands guilder:	
March 30, 1981	$0.430663
March 31, 1981	.427168

Portugal escudo:	
March 30, 1981	$0.017528
March 31, 1981	.017606
Republic of South Africa rand:	
March 30, 1981	$1.2477
March 31, 1981	1.2510
Spain peseta:	
March 30, 1981	$0.011585
March 31, 1981	.011710
Sri Lanka rupee:	
March 30–31, 1981	$0.055249
Switzerland franc:	
March 30, 1981	$0.523013
March 31, 1981	.518672
United Kingdom pound:	
March 30, 1981	$2.2375
March 31, 1981	2.2325

(LIQ–03–01 O:C:E)

Dated: April 2, 1981.

GWENN KLEIN KIRSCHNER,
Acting Chief,
Customs Information Exchange.

U.S. Customs Service

General Notice

(19 CFR Part 177)

Proposed Customs Regulations Amendments Relating to Country-of-Origin Determinations

AGENCY: U.S. Customs Service, Department of the Treasury.

ACTION: Proposed rule.

SUMMARY: This document proposes amendments to the Customs Regulations to reflect the Government procurement provisions of the Trade Agreements Act of 1979. The proposed amendments relate to the issuance of country-of-origin advisory rulings and final determinations relating to Government procurement under the act for the purpose of granting waivers of certain Buy American restrictions in U.S. law or practice for products of eligible countries.

DATES: Comments must be received on or before 60 days from date of publication in the Federal Register.

ADDRESS: Written comments should be addressed to the Commissioner of Customs, Attention: Regulations and Research Division, U.S. Customs Service, 1301 Constitution Avenue NW., room 2426, Washington, D.C. 20229.

FOR FURTHER INFORMATION CONTACT: Benjamin Mahoney, Entry Procedures and Penalties Division, Office of Regulations and Rulings, U.S. Customs Service, 1301 Constitution Avenue NW., Washington, D.C. 20229; 202–566–5778.

SUPPLEMENTARY INFORMATION:

BACKGROUND

The Trade Agreements Act of 1979, Public Law 96–39, 93 Stat. 144 (the act), approves and implements the trade agreements negotiated by the United States in the Tokyo Round of Multilateral Trade Negotiations (the MTN). The act consists of 11 separate titles. This document relates only to those aspects of title III of the act, Government Procurement, which impact Customs activities.

338-819 O - 81 - 4

Title III, which implements the Agreement on Government Procurement, permits the President to waive certain Buy American restriction in U.S. law or practice which discriminate against particular products of designated countries. Designated countries are those which are parties to the Agreement or which provide reciprocal procurement benefits to the United States. The President is permitted to prohibit Federal Government procurement of products from non-designated countries. Furthermore, the President is permitted to withdraw or to limit waivers granted, and, after consultation with the Congress and the private sector, to grant new waivers.

The President may waive those portions of U.S. law, most notably the Buy American Act (41 U.S.C. 10a et seq.) which discriminate against purchases of foreign goods by Federal Government agencies. A waiver can only apply to goods which are the products of designated countries. Least developed (poorest) countries could be designated without condition. All other countries are required to provide reciprocal benefits for the United States in their government procurement, and major industrial countries are required to become parties to the agreement in order to be designated.

Section 305(b) of title III provides that Customs will make country-of-origin advisory rulings and final determinations for the purpose of waivers for products of eligible countries. Judicial review of the final determinations is provided for in title X of the act.

To implement title III, it is proposed to redesignate the present provisions of part 177, Customs Regulations (19 CFR part 177), as subpart A and add a new subpart B to provide a procedure whereby any foreign manufacturer, producer, or exporter, or a U.S. importer of merchandise, may request and receive an advisory ruling or final determination as to the country of origin of imported merchandise.

AUTHORITY

These amendments are proposed under the authority of R.S. 251, as amended (19 U.S.C. 66); section 624, 46 Stat. 759 (19 U.S.C. 1624); Public Law 96–39, 93 Stat. 144.

COMMENTS

Before adopting this proposal, consideration will be given to any written comments, preferably in triplicate, that are submitted timely to the Commissioner of Customs. Comments submitted will be available for public inspection in accordance with section 103.8(b), Customs Regulations (19 CFR 103.8(b)), during regular business hours at the Regulations and Research Division, Headquarters, U.S. Customs Service, 1301 Constitution Avenue NW., Room 2426, Washington, D.C. 20229.

•

•

DRAFTING INFORMATION

The principal author of this document was John E. Elkins, Regulations and Research Division, Office of Regulations and Rulings, U.S. Customs Service. However, personnel from other Customs offices participated in its development.

PROPOSED AMENDMENTS

It is proposed to amend part 177, Customs Regulations (19 CFR part 177), in the following manner:

PART 177—ADMINISTRATIVE RULINGS

1. It is proposed to amend part 177 by adding a subpart designation before section 177.1 to read as follows:

SUBPART A—GENERAL RULING PROCEDURE

2. It is proposed to add a new subpart B to part 177 to read as follows:

SUBPART B—GOVERNMENT PROCUREMENT; COUNTRY-OF-ORIGIN DETERMINATIONS

177.21 General
177.22 Country of origin
177.23 Who may request country-of-origin determinations
177.24 By whom request is filed
177.25 Form and content of request
177.26 Where request filed
177.27 Notification of receipt
177.28 Advisory ruling
177.29 Appeal of advisory ruling
177.30 Publication of notice of final determination
177.21 General

This subpart relates to the issuance of country-of-origin advisory rulings and final determinations relating to Government procurement under Title III, Trade Agreements Act of 1979, Public Law 96–39, 93 Stat. 144, for the purpose of granting waivers of certain Buy American restrictions in U.S. law or practice for products of eligible countries.

177.22 Country of origin

For the purpose of this subpart, an article is a product of a country or instrumentality only if (1) it is wholly the growth, product, or manufacture of that country or instrumentality, or (2) in the case of an article which consists in whole or in part of materials from another country or instrumentality, it has been substantially transformed into

a new and different article of commerce with a name, character, or use distinct from that of the article or articles from which it was so transformed. The term "instrumentality" shall not be construed to include any agency or division of the government of a country, but may be construed to include such arrangements as the European Economic Community.

177.23 Who may request country-of-origin determinations

Any foreign manufacturer, producer, or exporter, or a U.S. importer of merchandise, may request a country-of-origin determination.

177.24 By whom request is filed

A request may be filed by a foreign manufacturer, producer, or exporter, or a U.S. importer of merchandise, or by a duly authorized attorney or agent on their behalf. A request filed by a corporation shall be signed by a corporate officer, and a request filed by a partnership shall be signed by a partner.

177.25 Form and content of request

The request shall be in writing and shall contain the following information:

(a) The name of the requester, the requester's principal place of business, and a statement that the requester is either a foreign manufacturer, producer, or exporter, or a U.S. importer, or a duly authorized attorney or agent;

(b) A description of the article for which a country-of-origin determination is requested;

(c) The country or instrumentality an article is claimed to be the product of; and,

(d) Such information as will enable Customs to determine if an article is a product of a specific country or instrumentality.

177.26 Where request filed

The request shall be filed with the Director, Entry Procedures and Penalties Division, Office of Regulations and Rulings, U.S. Customs Service, Washington, D.C. 20229.

177.27 Notification of receipt

Upon receipt of the request by the Office of the Director, Entry Procedures and Penalties Division, it shall be date stamped. The requester shall be promptly advised in writing of the date the request was received.

177.28 Advisory ruling

Within 25 days of receipt of the request, the Director, Entry Procedures and Penalties Division, shall issue an advisory ruling as to whether an article is or would be a product of the claimed foreign country or instrumentality within the meaning of this section. Failure

to issue a ruling within 25 days of receipt of the request shall be construed as an advisory ruling that an article is not or would not be a product of the foreign country or instrumentality claimed in the request. Any advisory ruling which is not appealed under section 177.29 shall become a final determination 30 days from the date of the decision.

177.29 Appeal of advisory ruling

An advisory ruling which is adverse to the requester may be appealed to the Director, Office of Regulations and Rulings, within 30 days of the date of the adverse advisory ruling. The appeal shall contain the same information required by section 177.25. In addition, the appeal shall identify the adverse advisory ruling from which the appeal is taken and the reasons why the party appealing the ruling believes it is in error. The appeal shall be filed with the Director, Office of Regulations and Rulings, U.S. Customs Service, Washington, D.C. 20229. Upon receipt of the appeal by the Office of the Director, Office of Regulations and Rulings, it shall be date stamped. The party appealing shall be promptly advised in writing of the date the appeal was received. The Director, Office of Regulations and Rulings, shall, within 30 days of receipt of the appeal, issue a final determination on the appeal. No further administrative appeal may be taken from the final determination of the Director, Office of Regulations and Rulings. Failure to issue a decision within 30 days of receipt of the appeal shall be construed as a final determination that the article is not or would not be a product of the foreign country or instrumentality claimed in the appeal.

177.30 Publication of notice of final determinations

Notice of all final determinations shall be published in the Federal Register within 60 days of the date the final determination is issued or occurs because of failure to issue a decision within the time limits established by this subpart.

Dated: March 25, 1981.

WILLIAM T. ARCHEY,
Acting Commissioner of Customs.

Approved:

JOHN P. SIMPSON,
Acting Assistant Secretary of the Treasury.

[Published in the Federal Register April 9, 1981 (46 F.R. 21194)]

Decisions of the United States Court of Customs and Patent Appeals

(C.A.D. 1261)

S. J. STILE ASSOCIATES LTD., ET AL., APPELLANTS *v.* DENNIS SNYDER, ET AL., APPELLEES, No. 81-9 (—— F. 2d ——)

1. INTERLOCUTORY APPEAL FROM DENIAL OF PRELIMINARY INJUNCTION.

The decision of the Court of International Trade denying Brokers' notice for preliminary injunction is affirmed in case remanded for possible trial on merits.

2. ID.—SCOPE OF REVIEW.

In an interlocutory appeal from denial of preliminary injunctive relief the scope of review is narrow.

3. ID.—INJUNCTION—DISCRETION OF TRIAL COURT.

Application for a preliminary injunction is addressed to the discretion of the trial court, not to that of the appellate court.

4. ID.—ABUSE OF DISCRETION.

One denied a preliminary injunction must meet the heavy burden of establishing an abuse of the trial court's discretion or a clear error of law.

5. PREREQUISITES TO A GRANT OF PRELIMINARY INJUNCTIVE RELIEF.

Prerequisites to a grant of preliminary injunctive relief are: (1) threat of immediate irreparable harm; (2) consideration of any preponderant public interest; (3) likelihood of success on the merits; and (4) a favorable balance of hardships.

6. ID.

Trial court denial of preliminary injunctive relief must be upheld if it examined the appropriate factors and properly concluded that any one of those factors had not been established by the appellant.

7. ID.—PUBLIC INTEREST INJURY.

A preliminary injunction will not issue simply to prevent a mere possibility of injury, even where the prospective injury is great.

8. Language in Trial Court Decision Relative to Future Proceedings.

Trial court's decision is affirmed where the result is correct without scrutiny of every word spoken by the decisionmaker.

U.S. Court of Customs and Patent Appeals, April 2, 1981

Appeal from U.S. Customs Court, C.A.D. 1261

[Affirmed]

Mandel and *Grunfeld*, attorneys for appellants, *Robert B. Silverman* of counsel. *Thomas S. Martin*, Acting Assistant Attorney General, *David M. Cohen*, Director, Joseph I. Liebman, Attorney in charge, Sidney N. Weiss, attorneys for appellees.

[Oral argument on March 3, 1981 by *Robert B. Silverman* for appellants and *Sidney N. Weiss* for appellees.]

Before Markey, *Chief Judge*, Rich, Baldwin, Miller, and Nies, *Associate Judges*.

Markey, Chief Judge.

[1] This interlocutory appeal is from the denial of a preliminary injunction. S. J. Stile Associates Ltd., et al. (brokers), who have their sole places of business in the immediate vicinity of the customhouse at J. F. K. Airport, sought to restrain New York Regional Commissioner of Customs Dennis Snyder and his superiors (Commissioner) from discontinuing the practice of permitting a filing of cross-over entries in the New York City Customs District. The Court of International Trade, per Judge Boe, denied the brokers' application for injunctive relief from the bench and subsequently issued a written order to that effect. *S. J. Stile Associates Ltd., et al.* v. *Snyder, et al.*, 2 CIT ——, Slip Op. 81–2 (Jan. 12, 1981). We affirm.

BACKGROUND

The New York City Customs District is coextensive with the New York City Customs Region. The latter is divided into three geographical areas; viz, J. F. K. Airport (JFK), New York Seaport (Seaport) and Newark [19 CFR 101.1(a), 101.3(b)]. Each area has a customhouse located therein for transaction of Customs business.

The term "cross-over" refers to the filing of entry documents, and obtaining release of merchandise, at a customhouse located in one area within the district, for merchandise unladen or placed in a bonded warehouse in another area.

On November 7, 1980, the Commissioner issued Pipeline 524,[1] to become effective on January 12, 1981. After the effective date, Customs entry documentation, and the resulting release of merchandise from Customs custody, for merchandise unladen or warehoused at Seaport or Newark, could not be filed and obtained at JFK and would have

[1] In general, a Pipeline is an information bulletin.

to be filed and obtained at the customhouse at either Seaport or Newark.[2]

The cross-over entry procedure, described by appellants as in existence for 13 years, has remained in effect to this day throughout the New York Customs District. Although the trial court denied application for a preliminary injunction, appellees agreed, at the suggestion of Judge Boe, to postpone implementation of Pipeline 524 until April 1, 1981, pending decision in this appeal.

The purpose of Pipeline 524 as declared in its text is: "To adjust administrative policy to eliminate many of the errors and delays in entry and liquidation caused by inter-area processing at JFK, and to provide more accountable entry service and control of merchandise entered and stored in bonded warehouses."

The Commissioner says Pipeline 524 is one step in a program intended to ameliorate an integrity and management problem, developed over years in the New York region, in which a dishonest importer might effectively elect the customs officer (import commodity specialist) who would process his documentation.[3]

The Commissioner, having determined that elimination of cross-over filing was essential for effective integrity and management control, directed as a first step its elimination at JFK. Statistical surveys indicated that 97 percent of the brokerage business at JFK would be unaffected by application of Pipeline 524.[4]

The brokers claim that substantial time delays in filing documents and obtaining release of merchandise unladen at Seaport-Newark would not be tolerated by their clients, who would purportedly turn to competing brokers with offices at Seaport-Newark. The brokers allege an inability to pass on to their customers the increased business expenses incurred in opening offices at Seaport-Newark or in otherwise coping with travel delays between JFK and Seaport-Newark.

Between the issuance of Pipeline 524 on November 7, 1980, and its January 12, 1981, effective date, the Commissioner actively solicited comments on the prospective change in procedure and conducted meetings on at least five occasions with brokers having offices at or near JFK, at which the foregoing objections were asserted and considered. Remaining convinced of the necessity of eliminating cross-over entries at JFK as a first step in solving what was viewed as an integrity and management problem, the Commissioner adhered

---

[2] The Pipeline does not affect cross-over entries between Seaport and Newark. Entry documents and release for merchandise unladen or warehoused at JFK would have to be filed and obtained at JFK and not at either Seaport or Newark.

[3] Extensive investigations into abuses in the New York City Customs Region have resulted in 18 Federal prosecutions of customs officials and others.

[4] Because cross-over entries between Seaport and Newark constitute 55 to 60 percent of the business there, the Commissioner says an effort to find an appropriate solution of the Seaport-Newark cross-over problem is continuing.

thereto and the brokers brought this action below on December 19, 1980.[5]

OPINION

[2] In an interlocutory appeal from a denial of preliminary injunctive relief, the scope of review is narrow. **[3]** Application for a preliminary injunction is addressed to the discretion of the trial court, not to that of the appellate court. *A-Copy, Inc.* v. *Michaelson*, 599 F. 2d 450, 452 (CA 1 1978). **[4]** One denied a preliminary injunction must meet the heavy burden of establishing an abuse of the trial court's discretion of a clear error of law. *Brown* v. *Chote*, 41 U.S. 452 (1973); *Fifteen Thousand Eight Hundred and Forty-Four Welfare Recipients* v. *King*, 610 F. 2d 32, 34 (CA 1 1979).

[5, 6] The trial court must be upheld if it examined the appropriate factors and properly concluded that any one of these requisites for a preliminary injunction had not been established by the appellant: (1) A threat of immediate irreparable harm; (2) that the public interest would be better served by issuing than by denying the injunction; (3) a likelihood of success on the merits; and (4) that the balance of hardship on the parties favored appellant. *Grimard* v. *Carlston*, 567 F. 2d 1171, 1173 (CA 1 1978); 11 C. Wright and A. Miller, Federal Practice and Procedure § 2948 (1973); see generally, Developments in the Law—Injunctions, 78 Harv. L. Rev. 944 (1965).

IRREPARABLE HARM

Only a viable threat of serious harm which cannot be undone authorizes exercise of a court's equitable power to enjoin before the merits are fully determined. *Parks* v. *Dunlop*, 517 F. 2d 785 (CA 5 1975). **[7]** A preliminary injunction will not issue simply to prevent a mere possibility of injury, even where prospective injury is great. A presently existing, actual threat must be shown. 11 C. Wright and A. Miller, Federal Practice and Procedure § 2948 (1973); see, *State of New York* v. *Nuclear Regulatory Commission*, 550 F. 2d 745 (CA 2 1977); *Crowther* v. *Seaborg*, 415 F. 2d 347 (CA 10 1969).

The brokers presented general testimony that their business expenses would increase as a result of Pipeline 524. Concerning loss of business, no customer testified that it would transfer its business from any of the brokers.[6] In essence, the brokers invoke the equitable powers of the

[5] The Commissioner testified that Pipeline 524 would be amended to provide free government messenger service between JFK and Seaport-Newark. Hence, even the speculative injuries alleged by the brokers will be mitigated by virtue of the amendment to Pipeline 524. The brokers, devoting one-half page in an extended brief (60 pages) to the amended Pipeline, say that the messenger service does not fully eliminate time delays and increased business expenses.

[6] Brokers' affidavits expressed apprehension and expectation of such transfers. An affidavit described a customer's telephone inquiry on when a new office would be opened. Another affidavit had two customer's letters attached, one inquiring into the matter and the other indicating an intent to seek a broker with a downtown office. The writers of the letters did not testify.

court to stop an action of the Customs Service on the sole ground that the action would cause some increase in their business expenses. Though the Secretary of the Treasury, and thus the Customs Service, is required to facilitate the commerce of the United States and equal protection of consignees, 19 U.S.C. 1584(a)(2)(c), nothing in the law requires that the Secretary or the Customs Service insure against an increase of business expenses of customs brokers. Thus solid proof that increased expenses would be certain, had the same been addressed, would not alone justify the injunction sought.[7]

The trial judge noted:

> Except for testimony presented that increased costs in business operations would result in the event Pipeline 524 is implemented, minimal and insufficient proof, other then speculations, has been presented that a loss of business or other irreparable damage would result.

Recognizing that implementation of Pipeline 524 could result in increased business expenses, the trial judge determined that the brokers had not made a showing of irreparable harm sufficient to support the grant of a preliminary injunction. On careful review of the entire record, we cannot say that the trial judge's determination was erroneous. See, *Artmark Chicago Ltd.* v. *U.S.*, 64 CCPA 116, C.A.D. 1192, 558 F. 2d 600 (1977); *Los Angeles Customs and Freight Brokers Assn., Inc.* v. *Johnson*, 277 F. Supp. 525 (C.D. Cal., 1967).

PUBLIC INTEREST

As noted in the trial judge's written order, the extent of any possible injury, in the form of increased business expenses, that might occur if the injunction were denied, is paled by the injury that would be done public interest if the injunction were granted. The abuses and irregularities identified in the New York City Customs District reasonably motivated the Commissioner of Customs to order corrective action to preserve the integrity of the Customs Service. The brokers offered no evidence tending to minimize the threats of corruption and inefficiency which formed the basis for the issuance of Pipeline 524. The argument that the cross-over procedure itself does not create corruption, ignores the more relevant question of whether continuance of the cross-over procedure may foster or allow corruption or irregularities.

In view of the speculative nature of the proof of alleged irreparable harm, this court is not inclined to substitute its judgment of a pre-

---

[7] It was conceded at oral argument that the Secretary of the Treasury has authority to close down the customhouse at JFK altogether, and that brokers doing business at JFK would have no legal basis for an injunction against his doing so, there being no vested or constitutional right in the continued operation of any particular location of customhouses, or in a particular organization of customs regions and districts.

ferred corrective action for that chosen by the designated executive branch representative having primary responsibility for dealing with the problem entrusted to him. *FTC* v. *Cement Institute*, 333 U.S. 683, 726 (1948); *Jacob Siegel Co.* v. *FTC*, 327 U.S. 608, 611–613 (1946); *City of Grand Rapids* v. *Richardson*, 429 F. Supp. 1087 (W.D. Mich. 1977).[8]

We therefore find no error in the trial court's determination that there exists a preponderant public interest in implementing the procedures outlined in Pipeline 524.

Accordingly, we affirm the decision denying a preliminary injunction and remand the case for possible trial on the merits.[9]

AFFIRMED.

---

[8] In view of our holding, we need not address in detail other points raised by the parties on appeal regarding the likelihood of success on the merits or the balance of hardship. *A. O. Smith Corp.* v. *F.T.C.*, 530 F. 2d 515 (CA 3 1976). Whether issuance of Pipeline 524 is a result of rulemaking, for example, is mooted by appellants' actual notice (5 U.S.C. 553(b)) and opportunity to participate in the meetings held between Nov. 10, 1980, and Jan. 13, 1981. *Arlington Oil Mills, Inc.* v. *Knebel*, 543 F. 2d 1092 (CA 5 1976), *reh. den.* 545 F. 2d 168 (CA 5 1976); *Florida Citrus Commission* v. *U.S.*, 144 F. Supp. 517 (N.D. Fla. 1956), aff'd 352 U.S. 1021 (1957). No evidence was introduced that any interested party was not given notice or afforded a full and fair opportunity to participate in the consideration of Pipeline 524.

[9] [8] It is a decision we affirm, not every word spoken by the decisionmaker below. The trial judge's indication from the bench that trial on the merits was unlikely cannot, absent a successful motion to dismiss, deprive appellants of their right to a trial of any triable issue remaining.

United States Court of International Trade

One Federal Plaza

New York, N.Y. 10007

Chief Judge

Edward D. Re

Judges

Paul P. Rao
Morgan Ford
Scovel Richardson
Frederick Landis
James L. Watson
Herbert N. Maletz
Bernard Newman
Nils A. Boe

Senior Judge

Samuel M. Rosenstein

Clerk

Joseph E. Lombardi

Decisions of the United States Court of International Trade

(Slip Op. 81–28)

SCHERING CORPORATION, PLAINTIFF *v.* THE UNITED STATES, DEFENDANT

Court No. 76–9–02111

Before BOE, Judge.

ALKALOID SALTS—NATURAL, SYNTHETIC

I. L-ephedrine hydrochloride is not found in nature within the meaning of headnote 3(a) of schedule 4, part 3, the plaintiff having

failed to prove that it exists in the stem of the Ma Huang plant and serves as the starting substance to produce the imported merchandise.

II. Assuming, arguendo, that L-ephedrine hydrocholoride is found in nature, the plaintiff has failed to establish that said substance has not had changes made to its molecular structure during the production process of the imported merchandise.

[Judgment for defendant.]

(Decided March 24, 1981)

Barnes, Richardson & Colburn (*James S. O'Kelly* at the trial; *Michael A. Johnson* with him on the brief) for the plaintiff.

Thomas S. Martin, Acting Assistant Attorney General; *Joseph I. Liebman*, Attorney in Charge, International Trade Field Office, Commercial Litigation Branch (*Saul Davis* at the trial and on the brief) for the defendant.

BOE, Judge: The subject merchandise in the above-entitled action is the chemical compound L-ephedrine hydrochloride, a crystalline alkaloid salt, which was exported from Shanghai, China, and entered at the port of New York on May 14, 1976.

Upon liquidation the merchandise was classified by Customs as "synthetic" under item 437.20, TSUS. Plaintiff, however, contends that the merchandise is natural and, therefore, properly classifiable under item 437.22, TSUS. The relevant statutory scheme provides:

SCHEDULE 4.—CHEMICALS AND RELATED PRODUCTS

PART 3.—DRUGS AND RELATED PRODUCTS

Part 3 headnotes:

* * * * * * *

3. For the purposes of this part—

(a) "*natural substances*" are those substances found in nature which comprise whole plants and herbs, anatomical parts thereof, vegetable saps, extracts, secretions and other constituents thereof; whole animals, anatomical parts thereof, glands or other animal organs, extracts, secretions and other constituents thereof, and which have not had changes made in their molecular structure as found in nature;

(b) a "*synthetic substance*" is a chemical compound made by the artificial combination of elements or radicals by any physical or chemical process;

* * * * * * *

	Alkaloids and their esters, ethers, salts, and other compounds:	
	* * * * * * *	
	Other alkaloids and their compounds:	
437.20	Synthetic	25% ad val.
437.22	Natural: Not artificially mixed	10% ad val.

The pharmaceutical company in the People's Republic of China, engaged in the production of the imported merchandise, deems the details thereof to be a trade secret. Upon the motion by counsel for plaintiff, evidence as to the process described in the record, pursuant to an order of the court, was presented in camera. Plaintiff's counsel having renewed its request that such evidence be accorded the same confidentiality in the briefs of respective counsel and that circulation thereof accordingly be restricted, this court in conformity with counsel's request and in summarizing the process used in the production of the merchandise in question will neither attempt to detail herein the specific steps required nor the exact proportions of chemicals used during the process.

In the production of L-ephedrine hydrochloride, quantities of the dried stems of the herb, *Ephedra sinica* Stapf, also known as Ma Huang, are cut into small pieces. This cut material is then placed into an extraction vessel wherein large quantities of water are added, heated with live steam, thereby building up the pressure in the vessel. The extraction process is repeated several times, yielding an aqueous extract; the used stems are discarded as waste product. Sodium hydroxide, a strong base, is added to the aqueous extract, making the extract alkaline. In this alkaline environment, the ephedrine exists as an electrically neutral base and in this form the ephedrine (along with a related substance, pseudoephedrine) is extracted out of the aqueous solution and into an organic solution by the addition of the organic solvent, toluene. Subsequent steps in the production process involve the treatment of the ephedrine base with a solution of oxalic acid, creating the alkaloid salt, ephedrine oxalate. Following a crystallization process by which the pseudoephedrine is separated out, the ephedrine oxalate crystals are put into solution, and a calcium chloride solution is added, precipitating out calcium oxalate. The solution that remains after the removal of certain impurities, results in the L-ephedrine hydrochloride crystals which are the subject merchandise herein.

In addressing the issues determinative of the instant cause of action, the court, in conjunction with the professional presentations relating to organic chemistry and its application to the within proceedings made by learned witnesses, necessarily must apply to such testimony legal

best copy available

principles which may or may not conform to the rationale of the scientific scholar.

Upon the plaintiff rests the dual burden of proving that the classification made by Customs is in error and that its claimed classification is correct. Thus, in examining and considering the evidence adduced by the plaintiff, the court directs its immediate and initial attention to the sufficiency thereof in support of its claim that the imported merchandise is natural. Unless the plaintiff is able to so establish its claim, this cause of action fails.

In order to be a natural substance within the meaning of headnote 3(a) of schedule 4, part 3, the imported merchandise must satisfy two criteria: (1) It must be found in nature in a vegetable or animal source; and (2) it cannot have had changes made in its molecular structure as found in nature. For the reasons hereinafter stated, the court finds that neither of these criteria have been met, and, accordingly, the imported merchandise cannot be classified as "natural" within the meaning of schedule 4, part 3 of the tariff schedules, as claimed by plaintiff.

A substance is found in nature, within the meaning of headnote 3(a), when that substance exists as such in the vegetable or animal source from which it is produced and serves as the starting substance to produce an imported product. *See: United States* v. *Pharmacia Fine Chemicals*, 59 CCPA 196, 463 F. 2d 1370 (1972); *Sandoz, Inc.* v. *United States*, 57 CCPA 44, 418 F. 2d 1396 (1969) and *Chemical Specialties Co.* v. *United States*, 43 CCPA 93, C.A.D. 614 (1956). The undisputed evidence indicates that in the Ma Huang plant stem virtually all of the ephedrine is protonated, that is, there has been added to its basic structure a positively charged hydrogen atom, making the protonated ephedrine a positively charged particle. Such particles with positive electrical charges are termed cations. Again, it is undisputed that scientific theory has established that, in solution, cations are associated with negatively charged particles termed anions. The evidence also demonstrates that there is more than enough chloride anions in the plant stem to associate with all of the ephedrine cations in the plant. The underlying inquiry which accordingly must be determined is whether in the plant itself ephedrine cations and chloride anions exist in an association as to create the salt, L-ephedrine hydrochloride.

The evidence presented shows that the structure of the plant stem cannot be likened to a glass beaker containing a solution, the contents of which can all freely move about. The plant stem contains, among other structures, cell walls, providing a barrier between the contents of a cell and its outside environment, and vacuoles, the contents of which are separated from the rest of the cell by means of a semipermeable membrane. Plaintiff's witness, Mr. McGlotten, acknowledged

that he did not know whether the ephedrine cations and chloride anions were present in the same portions of the plant stem.[1] Without evidence that the ephedrine cations and the chloride anions are not precluded by their locations within the stem from being in proximity with each other, it cannot be presumed that these cations and anions have become associated therein, resulting in the creation of L-ephedrine hydrochloride within the plant stems.

For the purpose of proving that L-ephedrine hydrochloride is found in nature, it would be insufficient to demonstrate that only a de minimis quantity of L-ephedrine hydrochloride existed in the plant stems. The L-ephedrine hydrochloride must have served as the starting substance for the production of the imported merchandise. *See: United States* v. *Pharmacia Fine Chemicals, supra; Sandoz, Inc.* v. *United States, supra.* In *Sandoz*, the court found that digitoxin was not natural where only 10 percent of the imported merchandise was produced from digitoxin native to the plant. In the case at bar, the extensive chemical analysis of the stems by Dr. Flor showed that the L-ephedrine cation and the chloride anion in the plant stem represented very small percentages of the positive charges and negative charges, respectively, in the stem. Cations that were far more predominant than L-ephedrine in the Ma Huang stem included calcium, magnesium, and potassium representing, respectively, 72.57, 12.37 and 10.63 percent of all cations in the Ma Huang stem (R. 199). These, in addition to pseudoephedrine cations as well as others might well compete with the L-ephedrine cation for the chloride anion, again depending on their respective locations within the plant cellular structure. In addition to the chloride anion in the stem, Dr. Flor found significant amounts of oxalic acid, which, in the presence of an ephedrine base, could associate with all of the ephedrine to produce ephedrine oxalate.[2]

Despite all of these possible ionic combinations in the stems, plaintiff argues that the chloride anions are more likely to associate with ephedrine cations than other anions that might be present in the plant stem. The rationale for this conclusion, as related in the testimony of Mr. McGlotten, is that the L-ephedrine base being a strong base, would combine more readily with a strong acid such as hydrochloric acid, to form the salt L-ephedrine hydrochloride. However, plaintiff has provided no evidence wherein it appears that hydrochloric acid (HCL) exists in the plant stem, and in such quantity as to be able to combine with all of the ephedrine base to produce

[1] The testimony of Mr. McGlotten and that of Dr. Flor, the witnesses for the plaintiff and defendant, respectively, who had done chemical analyses of the Ma Huang stems, indicate that cell walls had to be disrupted in order to analyze the chemical contents of the stems.

[2] Dr. Flor also found the presence of phosphate anions and sulfate ions in the stem, which could compete with the chloride anions for the ephedrine cation, but the phosphates and sulfates were not quantified.

the L-ephedrine hydrochloride. The absence of any evidence that chloride is in fact bonded to the hydrogen in the plant stem, in the form of hydrochloric acid, makes plaintiff's assertions as to the affinity of the ephedrine cation for the chloride anion mere speculation.

In summary, plaintiff has failed to show that naturally occurring L-ephedrine hydrochloride serves to produce the imported merchandise. In fact, plaintiff has failed to prove that any L-ephedrine hydrochloride exists in the Ma Huang stem. This court, accordingly, cannot find that L-ephedrine hydrochloride is found in nature within the meaning of headnote 3(a) of schedule 4, part 3.

Assuming, for the sake of argument that plaintiff could establish that L-ephedrine hydrochloride is found in nature within the meaning of headnote 3(a), plaintiff's claim that the subject merchandise is natural, nevertheless, must fail inasmuch as plaintiff has failed to establish that the substance found in nature, that is, L-ephedrine hydrochloride "[has] not had changes made in [its] molecular structure as found in nature" within the meaning of headnote 3(a). This latter criterion of headnote 3(a) distinguishes synthetic substances from natural substances based on whether these substances have or have not undergone chemical changes subsequent to their natural production. *Pharmacia Fine Chemicals, supra.* We interpret this statutory criterion, as well as the case law construing it, to require that the original and natural L-ephedrine hydrochloride must remain identifiable at all distinct stages in the production of the imported merchandise. Cf. *Ciba-Geigy Corporation* v. *United States*, 65 CCPA 80, 582 F. 2d 26, C.A.D. 1210 (1978) (construing headnote 3 of schedule 4, part 1).

Continuing to assume, arguendo, that L-ephedrine hydrochloride has been extracted from the Ma Huang stems into an aqueous extract using an extraction vessel as described above, upon the addition of sodium hydroxide supplied from an outside source to the aqueous extract, the L-ephedrine hydrochloride, a salt, is destroyed and the L-ephedrine is chemically changed into a base. This reaction involves the removal of a proton (and thereby the positive charge) from the L-ephedrine cation, resulting in its disassociation from a chloride anion or, in fact, from any other anion with which it might be in association. In a subsequent step, the L-ephedrine base is further chemically changed into L-ephedrine oxalate when the L-ephedrine base reacts with oxalic acid solution which has been supplied from an outside source. This reaction involves the protonation of two L-ephedrine bases, and their association with a single oxalate anion. Again subsequently, the L-ephedrine oxalate chemically reacts with a calcium chloride solution which likewise has been supplied from an outside

scurce, resulting in the formation of L-ephedrine hydrochloride. This reaction involves an ionic interchange, that is, the oxalate anion associated with the L-ephedrine cations, becomes associated with the calcium cation and the chloride anions associated with the calcium cation becomes associated with the ephedrine anion.

According to the testimony and exhibits, the L-ephedrine hydrochloride, L-ephedrine and L-ephedrine oxalate, respectively existing at various stages of the production process, all have different molecular structures and physical properties. The court has noted the testimony of plaintiff's witness, Dr. Breslow, who, in commenting on the molecular changes occurring in the process involving the production of the imported merchandise, characterized such changes as trivial and reversible. To be sure, the concepts and interpretations of those learned authorities in their scientific fields of endeavor may bear a, perspective that is indeed dissimilar to those, including this court who must apply the common meaning and interpretation to an unambiguous word or group of words which have been enunciated by legislative authority. Notwithstanding the comments of witnesses minimizing the extent or nature of the molecular changes as herein referred to, from the evidence presented to this court it cannot be said that no chemical change has taken place subsequent to an alleged extraction of L-ephedrine hydrochloride from within the Ma Huang stems. Suffice it to say, the alleged natural L-ephedrine hydrochloride has not remained identifiable at all of the distinct stages in the production of the imported L-ephedrine hydrochloride. Therefore, this court must conclude that plaintiff has failed in its burden to demonstrate that the L-ephedrine hydrochloride "[has] not had changes made in [its] molecular structure as found in nature" within the meaning of headnote 3(a).

Plaintiff has thus failed to prove either of the two criteria which are requisite to establish the imported merchandise a natural substance within the contemplation of headnote 3(a). The definitions of "natural substances" and "synthetic substances" are complementary. *Pharmacia Fine Chemicals, supra.* Inasmuch as the imported merchandise is not classifiable as a "natural" alkaloid compound under 437.22, TSUS, it is, accordingly, properly classifiable under 437.20, TSUS.

Let judgment be entered accordingly.

Decision of the United States Court of International Trade

Abstracts

Abstracted Protest Decisions

DEPARTMENT OF THE TREASURY, *March 30, 1981.*

The following abstracts of decisions of the United States Court of International Trade at New York are published for the information and guidance of officers of the customs and others concerned. Although the decisions are not of sufficient general interest to print in full, the summary herein given will be of assistance to customs officials in easily locating cases and tracing important facts.

WILLIAM T. ARCHEY,
Acting Commissioner of Customs.

NUMBER DECISION	JUDGE & DATE OF DECISION	PLAINTIFF	COURT NO.	ASSESSED	HELD	BASIS	PORT OF ENTRY AND MERCHANDISE
				Par. or Item No. and Rate	Par. or Item No. and Rate		
P81/39	Re, C.J. March 23, 1981 (decided on remand of C.D. 4689 [C.A.D. 1202])	Rudolph Miles	73-11-03042, etc.	Item 690.15 18% without allowance under item 807.00	Items 690.15/ 870.00 18% upon full value of imported railroad boxcars, less cost or value of U.S. fabricated components (Z-beams) determined to be $395.22 per boxcar	Agreed statement of facts	El Paso American goods returned; U.S. fabricated Z-beams assembled into railroad boxcars
P81/40	Ford, J. March 23, 1981	RMS Electronics Inc.	77-12-04843	Item 682.05 12.5%	Item 685.20 5%	RMS Electronics, Inc. v. U.S. (C.D. 4818, aff'd C.A.D. 1249)	Honolulu Baluns, impedence matching couplers, matching transformers, model No. CA-2600F
P81/41	Ford, J. March 23, 1981	RMS Electronics Inc.	78-10-01838, etc.	Item 682.05 12.5% (items marked "A" and "B")	Item 682.07 6% (items marked "A") Item 685.20 5% (items marked "B")	RMS Electronics, Inc. v. U.S. (C.D. 4818, aff'd C.A.D. 1249)	New York Baluns, impedence matching couplers, matching transformers, model Nos. CA-2600F, MA-730, ATR-375, CA-2500, CA-2100, etc.

P81/42	Maletz, J. March 23, 1981	International Paint Co. (California), Inc.	69/19665, etc.	Item 409.00 7¢ per lb. + 45%; 5.5¢ per lb. + 36%; 4.9¢ per lb. + 31%; 4¢ per lb. + 27%; 3.5¢ per lb. + 22.5%	Item 405.15 3.5¢ per lb. + 25%; 3¢ per lb. + 22%; 2.5¢ per lb. + 20%; 2¢ per lb. + 17.5%; 2¢ per lb. + 15%; 1.7¢ per lb. + 12.5%	Agreed statement of facts	San Francisco "Antifouling Paste Paint H134"
P81/43	Maletz, J. March 23, 1981	K Mart Corporation	78-11-01926	Item 649.83 8.7¢ each + 13.3%	Item 650.19 1¢ each + 6%	Agreed statement of facts	Longview (Portland, Oreg) Fixed blade hunting knives with woodan handles
P81/44	Richardson, J. March 25, 1981	Sortex Co. of North America, Inc.	79-4-00710, etc.	Item 712.49 10%	Item 666.25 5.5%	Sortex Company of North America, Inc. v. U.S. (C.D. 4746, aff'd C.A.D. 1221)	New York Electronic color sorting machines and parts thereof
P81/45	Watson, J. March 25, 1981	Canadian Vinyl Industries, Inc.	73-3-00778	Item 355.82 12.5¢ per lb. + 15%	Item 771.40 4%	U.S. v. Canadian Vinyl Industries, Inc. (C.A.D. 1189)	Champlain-Rouses Point (Ogdensburg) Polyurethane coated nylon fabrics
P81/46	Watson, J. March 25, 1981	Canadian Vinyl Industries, Inc.	73-9-02662	Item 355.82 12.5¢ per lb. + 15%	Item 771.40 4%	U.S. v. Canadian Vinyl Industries, Inc. (C.A.D. 1189)	Champlain-Rouses Point (Ogdensburg) Polyurethane coated nylon fabrics

DECISION NUMBER	JUDGE & DATE OF DECISION	PLAINTIFF	COURT NO.	ASSESSED	HELD	BASIS	PORT OF ENTRY AND MERCHANDISE
				Par. or Item No. and Rate	Par. or Item No. and Rate		
P81/47	Watson, J. March 25, 1981	WFS Div. Amer. Rec. Grp., Ltd.	78-4-00640	Item 389.62 25¢ per lb. + 15%	Item 735.20 10%	The Newman Importing Co., Inc. v. U.S. (C.D. 4648)	Boston Nylon backpacking tents
P81/48	Watson J., March 25, 1981	WFS Div. Amer. Rec. Grp., Ltd.	78-6-01118	Item 389.60 or 389.62 25¢ per lb. + 15%	Item 735.20 10%	The Newman Importing Co., Inc. v. U.S. (C.D. 4648)	New York Nylon backpacking tents
P81/49	Ford, J. March 26, 1981	RMS Electronics Inc.	75-10-02533, etc.	Item 682.05 12.5% (items marked "A" and "B")	Item 682.07 6% (items marked "A") Item 685.20 5% (items marked "B", model CA-2600F)	RMS Electronics, Inc. v. U.S. (C.D. 4818, aff'd C.A.D. 1249)	New York Baluns, impedence matching couplers, matching transformers, model Nos. CA-2600F, MA-730, ART-375, CA-2500, CA-2100, etc. (items marked "A" and "B")
P81/50	Watson, J. March 26, 1981	J. C. Penney Purchasing Corporation	78-11-02069, etc.	Item 389.62 25¢ per lb. + 15% (items marked "A" and "B")	Item 735.20 10% (items marked "A") Item A735.20 Free of duty pursuant to general headnote 3(c) of TSUS, au-	The Newman Importing Co., Inc. v. U.S. (C.D. 4648)	San Francisco Nylon tent flies (items marked "A" and "B")

					thorized by title V of Trade Act of 1974, and Executive Order No. 11888 of 11-26-75 (items marked "B")		
P81/51	Watson, J. March 27, 1981	Mobay Chemical Corp. et al.	73-5-01261, etc.	Item 409.00 7¢ per lb. + 45%; 6.3¢ per lb. + 40%; 5.5¢ per lb. + 36%; 4.9¢ per lb. + 31%; 4¢ per lb. + .27%; 3.5¢ per lb. + 22.5% (items marked "A" and "B")	Item 405.25 2.8¢ per lb. + 18%; 2.5¢ per lb. + 16%; 2.2¢ per lb. + 14%; 1.9¢ per lb. + 12.5%; 1.6¢ per lb. + 10.5%; 1.4¢ per lb. + 9% (items marked "A") Item 406.70 40%, 36%, 32%, 28%, 24%, 20% (items marked "B")	Agreed statement of facts	New York "White and black urethane pastes" (items marked "A") All involved urethane pastes other than those described as "white" or "black" (items marked "B")

Decisions of the United States Court of International Trade

Abstracts

Abstracted Reappraisement Decisions

DECISION NUMBER	JUDGE & DATE OF DECISION	PLAINTIFF	COURT NO.	BASIS OF VALUATION	HELD VALUE	BASIS	PORT OF ENTRY AND MERCHANDISE
R81/116	Re, C.J. March 25, 1981	Holly Stores, Inc.	77-12-04894, etc.	Export value	Appraised values shown on entry papers less additions included to reflect currency revaluation	C.B.S. Imports Corp. v. U.S. (C.D. 4739)	Los Angeles Wearing apparel, etc.

R81/117	Re, C.J. March 25, 1981	Kanmatsu Gosho (USA) Inc.	74-10-02901, etc.	Export value	Appraised values shown on entry papers less additions included to reflect currency revaluation	C.B.S. Imports Corp. v. U.S. (C.D. 4739)	New York Wearing apparel, etc.
R81/118	Re, C.J. March 25, 1981	Marubeni America Corp. et al.	74-12-03482, etc.	Export value	Unit values found by appraising customs official, less ocean freight and marine insurance, without additions to said values for currency fluctuation	C.B.S. Imports Corp. v. U.S. (C.D. 4739)	New York Various articles
R81/119	Re, C.J. March 25, 1981	Marubeni America Corp.	75-4-00961	Export value	Unit values found by appraising customs official, less ocean freight and marine insurance, without additions for currency fluctuation	C.B.S. Imports Corp. v. U.S. (C.D. 4739)	New York Cotton fabrics
R81/120	Re, C.J. March 25, 1981	Sanyo Electric Inc.	78-8-01373	Export value	Appraised values shown on entry papers less additions included to reflect currency revaluation	C.B.S. Imports Corp. v. U.S. (C.D. 4739)	Los Angeles Electronic articles

DECISION NUMBER	JUDGE & DATE OF DECISION	PLAINTIFF	COURT NO.	BASIS OF VALUATION	UNIT OF VALUE	BASIS	PORT OF ENTRY AND MERCHANDISE
R81/121	Watson, J. March 26, 1981	Geigy Chemical Corporation	R65/18054	United States value	U.S. selling prices, less 1% cash discount as determined by customs officer at time of appraisement; less 24.2% representing profit and general expenses usually made in U.S. on sales of dyestuffs of same class or kind; less costs of transportation and insurance from place of shipment to place of delivery in amounts determined by customs officer at time of appraisement; divided by 1.40 or such other factor applied by customs officer, to allow for customs duties payable on imported dyestuffs	U.S. v. Geigy Chemical Corporation et al. (C.A.D. 1155)	New York Benzenoid dyestuffs

R81/122	Watson, J. March 26, 1981	Geigy Chemical Corporation	R65/18436	United States value	U.S. selling prices, less 1% cash discount as determined by customs officer at time of appraisement; less 25.3% representing profit and general expenses usually made in U.S. on sales of dyestuffs of same class or kind; less costs of transportation and insurance from place of shipment to placeof delivery in amounts determined by customs officer at time of appraisement; divided by 1.40 or such other factor applied by customs officer, to allow for customsduties payable on mported dyestuffs	U.S. v. Geigy Chemical Corporation et al. (C.A.D. 1155)	New York Benzenoid dyestuffs

DECISION NUMBER	JUDGE & DATE OF DECISION	PLAINTIFF	COURT NO.	BASIS OF VALUATION	UNIT OF VALUE	BASIS	PORT OF ENTRY AND MERCHANDISE
R81/123	Watson, J. March 26, 1981	Geigy Chemical Corporation	R65/18451	United States value	U.S. selling prices, less 1% cash discount as determined by customs officer at time of appraisement; less 24.2% representing profit and general expenses usually made in U.S. on sales of dyestuffs of same class or kind; less costs of transportation and insurance from place of shipment to place of delivery in amounts determined by customs officer at time of appraisement; divided by 1.40 or such other factor applied by customs officer, to allow for customs duties payable on imported dyestuffs	U.S. v. Geigy Chemical Corporation et al. (C.A.D. 1155)	New York Benzenoid dyestuffs
R81/124	Watson, J. March 27, 1981	Geigy Chemical Corporation	R65/18452	United States value	U.S. selling prices, less 1% cash discount as determined by customs officer at time of appraisement; less 24.2% representing profit and general expenses usually made in U.S. on sales of dye-	U.S. v. Geigy Chemical Corporation et al. (C.A.D. 1155)	New York Benzenoid dyestuffs

							New York Benzenoid dyestuffs
						U.S. v. Geigy Chemical Corporation et al. (C.A.D. 1155)	
					stuffs of same class or kind; less costs of transportation and insurance from place of shipment to place of delivery in amounts determined by customs officer at time of appraisement; divided by 1.40 or such other factor applied by customs officer, to allow for customs duties payable on imported dyestuffs		
				United States value	U.S. selling prices, less 1% cash discount as determined by customs officer at time of appraisement; less 24.2% representing profit and general expenses usually made in U.S. on sales of dyestuffs of same class or kind; less costs of transportation and insurance from place of shipment to place of delivery in amounts determined by customs officer at time of appraisement; divided by 1.40 or such other factor applied by customs officer, to allow for customs duties payable on imported dyestuffs		
				R65/18454			
			Geigy Chemical Corporation				
		Watson, J. March 27, 1961					
R81/125							

DECISION NUMBER	JUDGE & DATE OF DECISION	PLAINTIFF	COURT NO.	BASIS OF VALUATION	UNIT OF VALUE	BASIS	PORT OF ENTRY AND MERCHANDISE
R81/126	Watson, J. March 27, 1981	Geigy Chemical Corporation	R65/18455	United States value	U.S. selling prices, less 1% cash discount as determined by customs officer at time of appraisement; less 24.2% representing profit and general expenses usually made in U.S. on sales of dyestuffs of same class or kind; less costs of transportation and insurance from place of shipment to place of delivery in amounts determined by customs officer at time of appraisement; divided by 1.40 or such other factor applied by customs officer, to allow for customs duties payable on imported dyestuffs	U.S. v. Geigy Chemical Corporation et al. (C.A.D. 1155)	New York Benzenoid dyestuffs
R81/127	Watson, J. March 27, 1981	Geigy Chemical Corporation	R65/18522	United States value	U.S. selling prices, less 1% cash discount as determined by customs officer at time of appraisement; less 24.2% representing profit and general ex-	U.S. v. Geigy Chemical Corporation et al. (C.A.D. 1155)	New York Benzenoid dyestuffs

					penses usually made in U.S. on sales of dyestuffs of same class or kind; less costs of transportation and insurance from place of shipment to place of delivery in amounts determined by customs officer at time of appraisement; divided by 1.40 or such other factor applied by customs officer, to allow for customs duties payable on imported dyestuffs		
R81/128	Watson, J. March 27, 1981	Kanematsu N.Y., Inc. Kanematsu-Gosho (USA) Inc.	R68/1830, etc.	Cost of production	Invoiced unit prices, f.o.b. Japan	Given International, Inc. v. U.S. (C.D. 4624)	Cleveland Lathes and accessories
R81/129	Watson, J. March 27, 1981	Kanematsu N.Y. Inc. Kanematsu-Gosho (USA) Inc.	R68/2686, etc.	Cost of Production	Invoiced unit prices, f.o.b. Japan	Given International, Inc. v. U.S. (C.D. 4624)	New York Lathes and accessories
R81/130	Watson, J. March 27, 1981	First Chemical Products, Inc.	R70/5972, etc.	American selling price	Equal to appraised values if exported in 1969; $8.50 per kilogram, net, packed, if exported in 1970; or $8.62 per kilogram, net, packed, if exported 1/1/71-6/30/71	Agreed statement of facts	New York Sulfamethazine U.S.P. grade

International Trade Commission Notices

Investigations by the U.S. International Trade Commission

DEPARTMENT OF THE TREASURY

The appended notices relating to investigations by the U.S. International Trade Commission are published for the information of Customs Officers and others concerned.

R. E. CHASEN,
Commissioner of Customs.

Investigation No. 731–TA–40 (Preliminary)

SECONDARY ALUMINUM ALLOY IN UNWROUGHT FORM FROM THE UNITED KINGDOM

AGENCY: U.S. International Trade Commission.

ACTION: Institution of preliminary antidumping investigation.

SUMMARY: The U.S. International Trade Commission hereby gives notice of the institution of investigation No. 731–TA–40 (preliminary) to determine whether there is a reasonable indication that an industry in the United States is materially injured, or is threatened with material injury, or the establishment of an industry in the United States is materially retarded, by reason of imports from the United Kingdom of secondary aluminum alloy in unwrought form, provided for in item 618.0650 of the Tariff Schedules of the United States Annotated (TSUSA), which are allegedly sold or likely to be sold in the United States at less than fair value (LTFV).

EFFECTIVE DATE: March 24, 1981.

FOR FURTHER INFORMATION CONTACT: Mr. Lynn Featherstone, Office of Investigations, U.S. International Trade Commission, Room 346, 701 E Street NW., Washington, D.C. 20436; telephone 202–523–0242.

SUPPLEMENTARY INFORMATION: On March 24, 1981, petitions were simultaneously filed with the U.S. Department of Commerce and the U.S. International Trade Commission by the

Aluminum Recycling Association, Inc., on behalf of its member firms alleging that secondary aluminum alloy in unwrought form from the United Kingdom is being sold in the United States at LTFV and that an industry in the United States is being materially injured or threatened with material injury by reason of such imports. Accordingly, pursuant to section 733(a) of the Tariff Act of 1930 (19 U.S.C. 1673b(a)), the Commission is instituting preliminary antidumping investigation No. 731–TA–40 (preliminary) to determine whether a reasonable indication of such injury exists. The Commission must make its determination within 45 days after the date on which the petition was received, or in this case by May 8, 1981. The investigation will be conducted according to the provisions of part 207, subpart B, of the Commission's Rules of Practice and Procedure (19 CFR 207).

For purposes of this investigation, secondary aluminum alloy is aluminum alloy which has been produced from aluminum recovered from scrap.

WRITTEN SUBMISSIONS: Any person may submit to the Commission a written statement of information pertinent to the subject of this investigation. A signed original and 19 true copies of each submission must be filed at the Office of the Secretary, U.S. International Trade Commission Building, 701 E Street NW., Washington, D.C. 20436, on or before April 24, 1981. All written submissions except for confidential business data will be available for public inspection.

Any business information for which confidential treatment is desired shall be submitted separately. The envelope and all pages of such submissions must be clearly labeled "Confidential business information." Confidential submissions and requests for confidential treatment must conform with the requirements of section 201.6 of the Commission's Rules of Practice and Procedure (19 CFR 201.6).

For further information concerning the conduct of the investigation and rules of general application, consult the Commission's Rules of Practice and Procedure, part 207, subparts A and B (19 CFR 207), and part 201, subparts A through E (19 CFR 201).

CONFERENCE: The Director of Operations of the Commission has scheduled a conference in connection with this investigation for 10 a.m. e.s.t., on Monday, April 20, 1981, at the U.S. International Trade Commission Building. Parties wishing to participate in the conference should contact the supervisory investigator for this investigation, Mr. Lynn Featherstone, 202–523–0242. It is anticipated that parties in support of the petition for antidumping duties and parties opposed to such petition will each be collectively allocated 1 hour within which to make an oral presentation at the conference. Further details concerning the conduct of the conference will be provided by the supervisory investigator.

INSPECTION OF PETITION: The petition filed in this case is available for public inspection at the Office of the Secretary, U.S. International Trade Commission.

This notice is published pursuant to section 207.12 of the Commission's Rules of Practice and Procedure (19 CFR 207.12).

By order of the Commission.

Issued: March 30, 1981.

KENNETH R. MASON,
Secretary.

Index

U.S. Customs Service

Treasury decisions:

	T.D. No.
American Manufacturer's Petition Concerning Classification of Footwear Known as "Moon Boots"	81-79
Cotton & Manmade Fiber/Mexico	81-80
Cotton Textile/Pakistan	81-81
Foreign Currencies:	
Rates which varied from quarterly rate—March 30-31, 1981	81-83
Certified quarterly rates—April 1-June 30, 1981	81-82
Synopses of drawback decisions	81-77 & 78
Alcohol, domestic tax-paid	81-77-A, 81-77-B, 81-77-C, 81-77-D, 81-77-E
Steel sheet, strip and blanks	81-78-A
Coconut oil, refined	81-78-B
Glutamate, monosodium	81-78-C
Orange juice for manufacturing, concentrated	81-78-D
Syrups, flavoring	81-78-E
Juice concentrates	81-78-F
Forgings, fittings, castings	81-78-G
Rods, iron or steel	81-78-H
Flax seed	81-78-I
Circuit board products, printed	81-78-J
Sugar, various	81-78-K
O-chloroaniline	81-78-L
Phosphorus pentoxide	81-78-M
Piece goods	81-78-N
Tire cord, steel	81-78-O
Para nitroaniline	81-78-P
Brass and copper sheet, strip and foil	81-78-Q
Styrene monomer	81-78-R
Guthion technical	81-78-S
Copper and copper sheet, strip and plate	81-78-T
Blazer technical	81-78-U
Cetyl-stearyl alcohol	81-78-V
NAPOF	81-78-W
Orange juice for manufacturing, concentrated	81-78-X
Titanium metal content of commercial grade titanium tetrachloride	81-78-Y
Calcined petroleum coke	81-78-Z

	C.A.D. No.
United States Court of Customs and Patent Appeals:	
S. J. Stile Associates Ltd., et al., v. *Dennis Snyder, et al*	1261

U.S. GOVERNMENT PRINTING OFFICE : 1981 O - 338-819

DEPARTMENT OF THE TREASURY
U.S. CUSTOMS SERVICE
WASHINGTON, D.C. 20229

OFFICIAL BUSINESS
PENALTY FOR PRIVATE USE, $300

POSTAGE AND FEES PAID
DEPARTMENT OF THE TREASURY (CUSTOMS)
(TREAS. 552)

15/17

Customs Bulletin

Regulations, Rulings, Decisions, and Notices concerning Customs and related matters

and Decisions

of the United States Court of Customs and Patent Appeals and the United States Court of International Trade

Vol. 15 APRIL 29, 1981 No. 17

NEWARK PUBLIC LIBRARY

MAY 20 1981

U. S. GOVT. PUBS.
DEPOSITORY 376

This issue contains

T.D. 81–84 through 81–92
Erratum
International Trade Commission Notice

THE DEPARTMENT OF THE TREASURY
U.S. Customs Service

T 1.11/3:

NOTICE

The abstracts, rulings, and notices which are issued weekly by the U.S. Customs Service are subject to correction for typographical or other printing errors. Users may notify the U.S. Customs Service, Logistics Management Division, Washington, D.C. 20229, of any such errors in order that corrections may be made before the bound volumes are published.

For sale by the Superintendent of Documents, U.S. Government Printing Office, Washington, D.C. 20402. Price: $2.25 (single copy domestic); $2.85 (single copy foreign). Subscription price: $85.00 a year domestic; $106.25 a year foreign.

U.S. Customs Service

Treasury Decisions

(T.D. 81-84)

Coastwise Transportation—Customs Regulations Amended

Sections 4.93(b)(1) and 4.93(b)(2), Customs Regulations, amended to add Chile to the lists of nations whose registered vessels are permitted to transport certain articles coastwise

TITLE 19—CUSTOMS DUTIES

CHAPTER I—U.S. CUSTOMS SERVICE

PART 4—VESSELS IN FOREIGN AND DOMESTIC TRADES

AGENCY: U.S. Customs Service, Department of the Treasury.

ACTION: Final rule.

SUMMARY: This document amends the Customs Regulations to add Chile to the lists of nations which permit vessels of the United States to transport certain articles specified in section 27, Merchant Marine Act of 1920, as amended, between their ports. The Department of State has furnished satisfactory evidence that Chile places no restrictions on the transportation of the specified articles by vessels of the United States between ports in that country. This amendment provides reciprocal privileges for vessels registered in Chile.

EFFECTIVE DATE: July 24, 1980.

FOR FURTHER INFORMATION CONTACT: Michael K. Tomenga, Carriers, Drawback and Bonds Division, U.S. Customs Service, 1301 Constitution Avenue NW., Washington, D.C. 20229; 202-566-5706.

SUPPLEMENTARY INFORMATION:

BACKGROUND

Section 27, Merchant Marine Act of 1920, as amended (46 U.S.C. 883) (the act), provides generally that no merchandise shall be

transported by water, or by land and water, between points in the United States except in vessels built in and documented under the laws of the United States and owned by U.S. citizens. However, the act, as amended, provides that upon a finding by the Secretary of the Treasury, pursuant to information obtained and furnished by the Secretary of State that a foreign nation does not restrict the transportation of certain articles between its ports by vessels of the United States, reciprocal privileges will be accorded to vessels of that nation, and the prohibition against the transportation of those articles between points in the United States will not apply to its vessels.

Section 4.93(b)(1), Customs Regulations (19 CFR 4.93(b)(1)), lists those nations found to extend reciprocal privileges to vessels of the United States for the transportation of empty cargo vans, empty lift vans, and empty shipping tanks. Section 4.93(b)(2), Customs Regulations (19 CFR 4.93(b)(2)), lists those nations found to grant reciprocal privileges to vessels of the United States for the transportation of equipment for use with cargo vans, lift vans, or shipping tanks; empty barges specifically designed for carriage aboard a vessel and certain equipment for use with such barges; certain empty instruments of international traffic and certain stevedoring equipment and material.

On July 24, 1980, the Department of State advised the Secretary of the Treasury that Chile places no restrictions on the transportation of the articles listed in the act by vessels of the United States between ports in Chile.

FINDING

On the basis of the information received from the Secretary of State, as described above, I find that the Government of Chile places no restrictions on the transportation of the articles specified in section 27 of the Merchant Marine Act of 1920, as amended, by vessels of the United States between ports in Chile. Therefore, reciprocal privileges are accorded to vessels registered in Chile as of July 24, 1980.

AMENDMENTS TO THE REGULATIONS

To reflect the reciprocal privileges granted to vessels registered in Chile, sections 4.93(b)(1) and 4.93(b)(2), Customs Regulations (19 CFR 4.93(b)(1), (b)(2), are amended by inserting "Chile" in appropriate alphabetical order in the lists of nations under those sections.

(Sec. 27, 41 Stat. 999, as amended, Sec. 14, 67 Stat. 516, Public Law 90-474, 82 Stat. 700 (5 U.S.C. 301, 19 U.S.C. 1322(a), 46 U.S.C. 883).)

INAPPLICABILITY OF PUBLIC NOTICE AND DELAYED EFFECTIVE DATE REQUIREMENTS

Because these are minor amendments in which the public is not particularly interested and there is a statutory basis for the described extension of reciprocal privileges, notice and public procedure pursuant to 5 U.S.C. 553(b)(B) are unnecessary. In accordance with 5 U.S.C. 553(d)(1), a delayed effective date is not required because these amendments grant an exemption.

INAPPLICABILITY OF REGULATORY FLEXIBILITY ACT

This document is not subject to the provisions of sections 603 and 604 of title 5, United States Code, as added by section 3 of Public Law 96–354, the Regulatory Flexibility Act. That act does not apply to any regulation such as this for which a notice of proposed rulemaking is not required by the Administrative Procedure Act (5 U.S.C. 551 et seq.) or any other statute.

DRAFTING INFORMATION

The principal author of this document was Barbara E. Whiting, Regulations and Information Division, Office of Regulations and Rulings, U.S. Customs Service. However, personnel from other offices of the Customs Service and the Departments of State and the Treasury participated in its development.

Dated: March 21, 1981.

JOHN P. SIMPSON,
Acting Assistant Secretary of the Treasury.

[Published in the Federal Register, Apr. 15, 1981 (46 F.R. 21988)]

(T.D. 81–85)

United States and Canada In-Transit Truck Procedures, Sections 123.41 and 123.42, Customs Regulations, Amended

TITLE 19—CUSTOMS DUTIES

CHAPTER I—U.S. CUSTOMS SERVICE

PART 123—CUSTOMS RELATIONS WITH CANADA AND MEXICO

AGENCY: U.S. Customs Service, Department of the Treasury.

ACTION: Final rule.

SUMMARY: Trucks proceeding between points in the United States may cross the United States-Canada border, use Canadian highways,

and then reenter the United States and proceed to their destination. This document amends the Customs Regulations to require the driver of a truck carrying merchandise between points in the United States, via Canada, to present a manifest (an itemized listing of the shipment) for validation by U.S. Customs at the U.S. port of departure. The driver would then be required to present the validated manifest to Canadian Customs at the Canadian ports of entry and exit and to U.S. Customs at the port of reentry into the United States. Under prior procedures, the manifest was required to be presented at the U.S. port of reentry but not at the port of departure. This change will enable U.S. Customs at the port of departure to verify the contents of shipments covered by the manifest so as to insure the payment of duties and taxes and compliance with applicable laws and regulations when the truck reenters the United States. Conforming amendments also are made because of similar changes in Canadian Customs procedures concerning truck shipments proceeding between points in Canada via the United States.

EFFECTIVE DATE: 30 days from the date of publication in the Federal Register.

FOR FURTHER INFORMATION CONTACT: Legal aspects: Benjamin H. Mahoney, Entry Procedures and Penalties Division, 202–566–5765; Operational aspects: J. Bradley Lund, Office of Inspection, 202–566–5354, U.S. Customs Service, 1301 Constitution Avenue, NW., Washington, D.C. 20229.

SUPPLEMENTARY INFORMATION:

BACKGROUND

Because of the geographic, highway, and climatic conditions along the United States-Canadian border, use of a Canadian route to transport merchandise by truck between points in the United States is a common occurrence. In these circumstances, the merchandise merely is being transported through Canada; there is no intent to export it from the United States. To process this type of movement, section 123.41, Customs Regulations (19 CFR 123.41), provides a simplified Customs procedure which allows for the reentry of merchandise into the United States without filing a Customs entry and paying duty.

Under prior procedures, a manifest on United States-Canada Transit Manifest, Customs Form 7512–B Canada 8 1/2, an itemized list of merchandise being transported, was presented to Canadian Customs officers at the Canadian port of arrival by the driver of a truck carrying shipments of merchandise between points in the United States through

Canada. Upon compliance with Canadian Customs regulations, the shipment was sealed, unless sealing was waived by Canadian Customs, and the driver was allowed to proceed through Canada. At the Canadian port of exit, the driver presented the manifest to Canadian Customs officers to verify that the seals were intact or, if sealing had been waived, that there were no irregularities. This insured that no changes had been made in the shipment. After verification and certification of the manifest, the driver was allowed to proceed to the U.S. port of reentry where he presented the certified copy of the manifest to U.S. Customs officers. If they were satisfied that the shipment contained only merchandise which moved on the truck from the United States through Canada, the truck was allowed to reenter the United States without filing a Customs entry and paying duty.

This procedure, which was implemented with the cooperation of Canadian Customs and was similar to the procedure they used for truck shipments proceeding between points in Canada via the United States, was designed to protect the revenue of both countries while not delaying unnecessarily the transportation of merchandise.

However, it had come to the attention of U.S. Customs that, in certain circumstances, the revenue may not be protected because foreign merchandise may be imported into the United States without duty being paid. For example, under section 123.31, Customs Regulations (19 CFR 123.31), merchandise may be transported in transit across the United States between Canada and Mexico under the procedures set forth in part 18, Customs Regulations (19 CFR part 18), for merchandise entered for transportation and exportation. Using these procedures, a shipment of foreign merchandise from Mexico destined for Canada may be transported under bond on a Transportation and Exportation Entry (T&E) by truck through the United States and exported to Canada. Because the merchandise is not entering the commerce of the United States, the truckdriver need not file a formal U.S. Customs entry and pay duty. However, it had been found that after the T&E is closed by U.S. Customs officers at the U.S. port of exit and the bond canceled, some truckdrivers then had presented a manifest on Customs Form 7512–B Canada 8 1/2 to Canadian Customs at a Canadian port of arrival. By following the procedures under section 123.41, foreign merchandise transported through the United States from Mexico to Canada was shown on the manifest as merely being transported by truck from point to point in the United States through Canada and then was reentered into the United States without an entry filed and duty paid. In addition to creating a situation that allowed the United States to be deprived of the revenue due on this foreign merchandise, the prior wording of section 123.41 could allow

persons to bring narcotics and other contraband into the United States.

Accordingly, on December 9, 1976, a notice was published in the Federal Register (41 F.R. 53810) of a proposal to amend section 123.41(a) to require the driver of a truck carrying shipments of merchandise between points in the United States through Canada to present a manifest on Customs Form 7512–B Canada 8 1/2 to U.S. Customs officers at the U.S. port of departure. This would allow U.S. Customs officers there to validate the manifest for shipments of merchandise transiting Canada by truck from point to point in the United States. A manifest on Customs Form 7512–B Canada 8 1/2 would not be presented for validation if the merchandise covered by the manifest arrives at the U.S. port of departure for export. Without a validated manifest, Canadian Customs officers at the Canadian port of entry would not permit the truck shipment to transit Canada from point to point to return to the United States. This procedure would insure that foreign merchandise is not reentered into the United States without the filing of an entry and payment of duties.

Based upon the comments received in response to the notice and upon further review of this matter, Customs determined that certain changes were necessary in the procedures followed by U.S. Customs officers concerning presentation of Customs Form 7512–B Canada 8 1/2 which were not included in the initial proposal to amend section 123.41. Furthermore, it also became necessary to make conforming amendments to section 123.42, Customs Regulations (19 CFR 123.42), concerning the procedures used by Canadian Customs for truck shipments transiting the United States while proceeding between points in Canada.

In view of the foregoing, a new notice of proposed rulemaking was published in the Federal Register on August 20, 1980 (45 F.R. 55474). Interested parties were given until October 20, 1980, to submit written comments on the proposal.

DISCUSSION OF COMMENTS

Five comments were received in response to the notice. Four of the responses were in favor of adoption of the proposal. In addition, one of these commenters suggested that the in-transit manifest, Customs Form 7512–B Canada 8 1/2, be changed to provide for a description of the merchandise on the form. Customs considers a change in the form itself to be outside the scope of this regulatory project; however, the suggestion will be considered separately.

One commenter expressed concern about an operational problem he believes would arise if the proposed regulations were implemented.

He states that under existing procedures, merchandise transiting the United States between points in Canada is placed in-bond at the U.S. port of arrival in the name of a bonded carrier or freight forwarder. The commenter also notes that a U.S. customhouse broker generally prepares the in-transit manifest at the port of arrival, including providing the name of the bonded carrier, and signs the document on behalf of the bonded carrier.

The commenter states that if the regulations were adopted as proposed thereby requiring the driver of the truck to present the in-transit manifest at the first port of departure in Canada prior to transiting the United States, the party preparing this form in Canada would have to know which carriers in the United States are bonded and also have an appropriate power of attorney to sign the in-transit manifest on behalf of the bonded carrier. He indicates that the same situation would occur for the party preparing the in-transit manifest in the United States to permit a bonded movement in Canada.

The commenter suggests that the person preparing the in-transit manifest at the port of departure complete the document except leave blank the name and signature of the bonded carrier. This portion of the form would be completed once the merchandise arrives at the port of arrival in the other country.

Customs notes that pilot programs have revealed no serious problems with this procedure. Furthermore, many carriers are bonded in both countries. However, Customs has no objection to the suggestion that the name and signature of the bonded carrier be left blank at the first port of departure and be completed at the port of arrival in the other country. Since the proposed regulations require that the merchandise transiting the other country be manifested at the port of departure and the form validated there by Customs officials, we believe the suggestion may be used without revising the proposal. Accordingly, the amendments are being adopted as proposed.

INAPPLICABILITY OF REGULATORY FLEXIBILITY ACT

This document is not subject to the provisions of sections 603 and 604 of title 5, United States Code (as added by sec. 3 of Public Law 96–354, the Regulatory Flexibility Act) because it was the subject of a notice of proposed rulemaking published in the Federal Register before January 1, 1981, the effective date of the act.

DRAFTING INFORMATION

The principal author of this document was Charles D. Ressin, Regulations and Information Division, Office of Regulations and Rulings, U.S. Customs Service. However, personnel from other Customs offices participated in its development.

AMENDMENTS TO THE REGULATIONS

Part 123, Customs Regulations (19 CFR part 123), is amended as set forth below.

WILLIAM T. ARCHEY,
Acting Commissioner of Customs.

Approved: Mar. 30, 1981.

JOHN P. SIMPSON,
Acting Assistant Secretary of the Treasury.

[Published in the Federal Register, Apr. 15, 1981 (46 F.R. 21989)]

PART 123—CUSTOMS RELATIONS WITH CANADA AND MEXICO

SUBPART E—UNITED STATES AND CANADA IN-TRANSIT TRUCK PROCEDURES

1. Section 123.41 is amended to read as follows:

§ 123.41 Truck shipments transiting Canada.

(a) *Manifest required.*—Trucks with merchandise transiting Canada from point to point in the United States will be manifested on United States-Canada Transit Manifest, Customs Form 7512–B Canada 8 1/2. The driver shall present the manifest in four copies to U.S. Customs at the U.S. port of departure for review and validation.

(b) *Procedure at U.S. port of departure.*—The Customs officer receiving the manifest shall validate it by stamping each copy in the lower right hand corner to show the port name and date and by initialing each copy. All copies of the validated manifest then will be returned to the driver for presentation to Canadian Customs at the Canadian port of entry.

(c) *Procedure at Canadian ports of arrival and exit.*—Truck shipments transiting Canada shall comply with Canadian Customs regulations. These procedures generally are as follows:

(1) *Canadian port of arrival.*—The driver shall present a validated United States-Canada Transit Manifest, Customs Form 7512–B Canada 8 1/2, in four copies to the Canadian Customs officer, who shall review the manifest for accuracy and verify its validation by U.S. Customs. If the manifest is found not to be properly validated, the truck shall be required to be returned to the U.S. port of departure so that the manifest may be validated. If the manifest is validated properly and no irregularity is found, the truck will be sealed unless sealing is waived by Canadian Customs. The original manifest will be retained by Canadian Customs at the port of arrival, and the three copies will be returned to the driver for presentation to Canadian Customs at the Canadian port of exit.

(2) *Canadian port of exit.*—The driver shall present the three copies of the validated manifest to the Canadian Customs officer at the Canadian port of exit for certification. That officer shall verify that the seals are in tact if the vehicle has been sealed or, if sealing has been waived, that there are no irregularities. After verification and certification of the manifest, two certified copies will be returned to the driver (one to be presented to U.S. Customs at the U.S. port of reentry, the other for the carrier's records), and the truck will be allowed to proceed to the United States.

(d) *Procedure at U.S. port of reentry.*—The driver of a truck reentering the United States after transiting Canada shall present a certified copy of the United States-Canada Transit Manifest, Customs Form 7512–B Canada 8 1/2, to the U.S. Customs officer. If this copy of the manifest does not bear the certification of a Canadian Customs officer at the Canadian port of exit, the driver will be allowed to return to that port to have it certified. The driver will be allowed to break any seals affixed by Canadian Customs upon presentation of a certified manifest. If sealing has been waived, the U.S. Customs officer shall satisfy himself that the truck contains only that merchandise covered by the manifest which moved on the truck from the United States through Canada.

(e) *Proof of exportation from Canada.*—The certified copy of the manifest returned to the driver by Canadian Customs at the Canadian port of exit will serve as proof of exportation of the shipment from Canada.

2. §123.42 is amended to read as follows:

§ 123.42 Truck shipments transiting the United States.

(a) *Manifest required.*—Trucks with merchandise transiting the United States from point to point in Canada will be manifested on United States-Canada Transit Manifest, Customs Form 7512–B Canada 8 1/2. The driver, in accordance with Canadian Customs regulations, shall present the manifest in four copies to Canadian Customs at the Canadian port of departure for review and validation.

(b) *Procedure at Canadian port of departure.*—The Customs officer receiving the manifest shall validate it by stamping each copy in the lower right-hand corner to show the port name and date and by initialing each copy. All copies of the validated manifest then will be returned to the driver for presentation to U.S. Customs at the U.S. port of entry.

(c) *Procedure at U.S. port of arrival*—(1) *Presentation of manifest.*—The driver shall present a validated United States-Canada Transit Manifest, Customs Form 7512–B Canada 8 1/2, in four copies to the U.S. Customs officer, who shall review the manifest for accuracy and verify its validation by Canadian Customs. If the manifest

is found not to be validated properly, the truck will be required to be returned to the Canadian port of departure so that the manifest may be validated in accordance with Canadian Customs regulations. If the manifest is validated properly and no irregularity is found, the truck will be sealed unless sealing is waived by U.S. Customs. The U.S. Customs officer shall note on the manifest over his initials the seal numbers or the waiver of sealing, retain the original, and return three copies of the manifest with the related Customs Form 7512–C (duplicate) to the driver for presentation to U.S. Customs at the U.S. port of exit.

(2) *Sealing or waiver of sealing.*—Trucks transiting the United States will be sealed with red in-bond seals at the U.S. port of arrival unless sealing is waived in accordance with § 18.4 of this chapter. If a truck cannot be sealed effectively and sealing is deemed necessary to protect the revenue or to prevent violation of the Customs laws or regulations, the truck will not be permitted to transit the United States under bond.

(d) *Procedure at U.S. port of exit.*—The driver shall present the three validated copies of the manifest and the related Customs Form 7512–C (duplicate) to the U.S. Customs officer at the U.S. port of exit. The Customs officer shall check the numbers and condition of the seals and record and certify his findings on all copies of the manifest, returning two certified copies to the driver (one to be presented to Canadian Customs at the Canadian port of reentry, the other for the carrier's records), and the truck will be allowed to proceed to Canada. The check of the seals shall be made as follows:

(1) If the seals are intact, they will be left unbroken unless there is indication that the contents should be verified.

(2) If the seals have been broken, or there is other indication that the contents should be verified, all merchandise will be required to be unladen and a detailed inventory made against the waybills.

If sealing has been waived, the Customs officer shall verify the goods against the accompanying waybills in sufficient detail to detect any irregularity.

(e) *Procedure at Canadian port of reentry.*—The driver of a truck reentering Canada after transiting the United States shall present a certified copy of the United States-Canada Transit Manifest, Customs Forms 7512–B Canada 8 1/2, to the Canadian Customs officer. If this copy of the manifest does not bear the certification of a U.S. Customs officer at the U.S. port of exit, the driver will be allowed to return to that port to have it certified.

(f) *Proof of exportation from United States.*—The certified copy of the manifest returned to the driver by the U.S. Customs officer at the

U.S. port of exit will serve as proof of exportation of the shipment from the United States.

(R.S. 251, as amended, secs. 553, 554, 624, 46 Stat. 742, as amended, 743, 759 (19 U.S.C. 66, 1553, 1554, 1624))

LIST OF COMMENTERS

In response to the notice of proposed rulemaking published in the Federal Register on August 20, 1980 (45 F.R. 55474), concerning proposed amendments to the Customs Regulations relating to United States and Canada in-transit truck procedures, written comments were received from the following:

1. John V. Carr & Sons, Inc., Customs Brokers, Detroit, Mich.
2. Florida Citrus Mutual, Lakeland, Fla.
3. C. F. Liebert, Inc., Customs Brokers, Blaine, Wash.
4. Acting District Director of Customs, Portland, Oreg.
5. William M. McGuire, Customs Inspector, Niagara Falls, N.Y.

(T.D. 81-86)

Fish—Tariff-Rate Quota

Tariff-rate quota for the calendar year 1981, on fish dutiable under item 110.50, Tariff Schedules of the United States (TSUS)

AGENCY: U.S. Customs Service, Department of the Treasury.

ACTION: Announcement of the quota quantity on certain fish for calendar year 1981.

SUMMARY: The tariff-rate quota for fish pursuant to item 110.50, TSUS, for the 1981 calendar year is 47,263,870 pounds.

EFFECTIVE DATES: The 1981 tariff-rate quota is applicable to fish described in item 110.50, TSUS, which are entered, or withdrawn from warehouse, for consumption during calendar year 1981.

FOR FURTHER INFORMATION CONTACT: Helen C. Rohrbaugh, Head, Quota Section, Duty Assessment Division, Office of Commercial Operations, U.S. Customs Service, Washington, D.C. 20229; 202-566-8592.

SUPPLEMENTARY INFORMATION: This tariff-rate quota for fish is equal to 15 percent of the average aggregate apparent annual consumption in the United States of fish, fresh, chilled or frozen, fillets, steaks, and sticks, of cod, cusk, haddock, hake, pollock, and rosefish, for the three preceding years, as provided for in headnote 1, part 3A, schedule 1, and item 110.50, TSUS.

338-820 0 - 81 - 2

It has been determined that the average aggregate consumption for calendar years 1978 through 1980 was 315,092,467 pounds. Therefore, the quota quantity of fish, item 110.50, TSUS, for calendar year 1980 is 47,263,870 pounds.

(QUO-2-CO:T:D:SO)

Dated: April 9, 1981.

WILLIAM T. ARCHEY,
Acting Commissioner of Customs.

[Published in the Federal Register, Apr. 15, 1981 (46 F.R. 22096)]

(T.D. 81-87)

Bonds

APPROVAL AND DISCONTINUANCE OF CARRIER'S BONDS, CUSTOMS FORM 3587

Bonds of carriers for the transportation of bonded merchandise have been approved or discontinued as shown below. The symbol "D" indicates that the bond previously outstanding has been discontinued on the month, day, and year represented by the figures which follow. "PB" refers to a previous bond, dated as represented by figures in parentheses immediately following, which has been discontinued. If the previous bond was in the name of a different company or if the surety was different, the information is shown in a footnote at the end of the list.

Dated: April 9, 1981.

Name of principal and surety	Date of bond	Date of approval	Filed with district director/area director/amount
Aero Transit, Inc., 7595 Perimeter Rd., South, Boeing Field, Seattle, WA; air carrier; Cotton Belt Ins. Co.	Sept. 11, 1980	Jan. 27, 1981	Seattle, WA $25,000
Casado Transport, P.O. Box 523814, Miami, FL, motor carrier; St. Paul Fire & Marine Ins. Co.	Jan. 30, 1981	Feb. 23, 1981	Miami FL $25,000
Continental Contract Carrier Corp., 15045 E. Salt Lake, City of Industry, CA; motor carrier; Ins. Co. of North America D 2/13/81	July 18, 1979	Sept. 21, 1979	Los Angeles, CA $50,000
Davis Transport, Inc., 216 Trade St., Missoula, MT; motor carrier; Royal Ins. Co. of America	Jan. 20, 1981	Jan. 20, 1981	Great Falls, MT $25,000
W. L. Davis Trucking, Inc., P.O. Box 973, Pico Rivera, CA; motor carrier; Fireman's Fund Ins. Cc. (PB 1/11/80) D 3/1/81[1]	Jan. 3, 1981	Mar. 1, 1981	Nogales, AZ $25,000

See footnotes at end of table.

Name of principal and surety	Date of bond	Date of approval	Filed with district director/area director/amount
HEK, Inc., dba: Elliott Bay Service Transfer, 1701-1st Ave., S., Seattle, WA; motor carrier; Transamerica Ins. Co.	Jan. 8, 1981	Jan. 23, 1981	Seattle, WA $25,000
Freeport Maritime Supply Co., 215 Oak, P.O. Box 2246, Freeport, TX; motor carrier; Aetna Ins. Co. D 9/22/80	Mar. 1, 1979	Mar. 19, 1979	Galveston, TX $25,000
Friedman's Express, Inc., P.O. Box 4800, Wilkes Barre, PA; motor carrier; St. Paul Fire & Marine Ins. Co. (PB 8/14/75) D 3/6/81[2]	July 8, 1980	Mar. 6, 1981	Philadelphia, PA $50,000
HEK, Inc. (See Elliott Bay Service Transfer)			
Lucius, Inc., 9250 N. Wadsworth, Broomfield, CO; motor carrier; St. Paul Fire & Marine Ins. Co. D 3/3/81	May 31, 1974	May 31, 1974	El Paso, TX $50,000
Machinery Transports, Inc., 608 Cass St., East Peoria, IL; motor carrier; Commercial Union Ins. Co. D 2/26/81	Mar. 1, 1977	June 10, 1977	Chicago, Ill. $25,000
Malone Freight Lines, Inc., 200 South 35th St., P.O. Box 11103, Birmingham, AL; motor carrier; St. Paul Fire & Marine Ins. Co.	Oct. 28, 1980	Feb. 20, 1981	Mobile, AL $50,000
Northern Lights Express, P.O. Box 1050. Elizabeth, NJ; freight forwarder; Federal Ins. Co.	Dec. 5, 1980	Jan. 23, 1981	Seattle, WA $50,000
Ozark Motor Lines, Inc., 27 W. Illinois, Memphis, TN; motor carrier; Royal Ins. Co. of America	Oct. 17, 1980	Jan. 28, 1981	New Orleans, LA $25,000
Porter International, Inc., Custom House Broker, Foreign Freight Fowarder, P.O. Box 81488, San Diego, CA; freight forwarder; Peerless Ins. Co.	Dec. 29, 1980	Feb. 18, 1981	San Diego, CA $50,000
St. Louis-San Francisco Railway Co., St. Louis, MO; rail carrier; Fidelity & Deposit Co. of Maryland D 2/18/81	Jan. 1, 1947	Mar. 11, 1947	St. Louis, MO $100,000
Saia Motor Freight, P.O. Box A, Sta. 1, Houma, LA; motor carrier; Ins. Co. of North America (PB 12/23/70) D 2/2/81[3]	Dec. 23, 1980	Feb. 2, 1981	New Orleans, LA $25,000
SEA-MAR Services, Inc., 2111 N. Pace Blvd., P.O. Box 17829, Pensacola, FL; motor carrier; United States Fidelity & Guaranty Co.	Feb. 28, 1981	Mar. 6, 1981	Mobile, AL $25,000
Ship Service, Inc., P.O. Box 1284, Texas City, TX; motor carrier; The Hanover Ins. Co.	Jan. 26, 1981	Mar. 2, 1981	Galveston, TX $25,000
Riley Whittle, Inc., P.O. Box 19038, Phoenix, AZ; motor carrier; Great American Ins. Co.	Feb. 24, 1981	Feb. 26, 1981	Nogales, AZ $25,000
Williams Machinery Movers, Inc., 25 S. Denton Ave., New Hyde Park, NY; motor carrier; Washington International Ins. Co.	Jan. 29, 1981	Jan. 29, 1981	New York, NY $50,000

See footnotes at end of table.

Name of principal and surety	Date of bond	Date of approval	Filed with district director/area director/amount
Rocky Mountain High Express Co., 5758 Lamar St., Arvada, CO; motor contract carrier; St. Paul Fire & Marine Ins. Co.	Nov. 21, 1980	Jan. 22, 1981	El Paso, TX $25,000
Western Carriers, Inc., Building F-3, Hunts Point Cooperative Market, Bronx, NY; motor carrier The Hanover Ins. Co.	Oct. 9, 1979	Mar. 3, 1981	New York Seaport $25,000

[1] Surety is Lumbermen's Mutual Casualty Co.
[2] Surety is Peerless Ins. Co.
[3] Surety is The Travelers Indemnity Co.

BON-3-03

MARILYN G. MORRISON,
Director,
Carriers, Drawback and Bonds Division.

(T.D. 81-88)

Foreign Currencies—Daily Rates for Countries Not on Quarterly List

Rates of exchange based on rates certified to the Secretary of the Treasury by the Federal Reserve Bank of New York for the Brazil cruzeiro, People's Republic of China yuan, Hong Kong dollar, Iran rial, Philippines peso, Singapore dollar, Thailand baht (tical), and Venezuela bolivar

The Federal Reserve Bank of New York, pursuant to section 522(c), Tariff Act of 1930, as amended (31 U.S.C. 372(c)), has certified buying rates for the dates and foreign currencies shown below. The rates of exchange, based on these buying rates, are published for the information and use of Customs officers and others concerned pursuant to part 159, subpart C, Customs Regulations (19 CFR 159, subpart C).

Brazil cruzeiro:	
March 30–April 3, 1981	$0.013067
People's Republic of China:	
March 30, 1981	$0.610799
March 31, 1981	.618620
April 1–2, 1981	.612107
April 3, 1981	.609088
Hong Kong dollar:	
March 30, 1981	$0.189358
March 31, 1981	.189143
April 1, 1981	.189036
April 2, 1981	.188537
April 3, 1981	.187793

Iran rial:	
March 30–April 3, 1981	Not available
Philippines peso:	
March 30–April 2, 1981	$0. 130039
April 3, 1981	. 129366
Singapore dollar:	
March 30, 1981	$0. 479272
March 31, 1981	. 478240
April 1, 1981	. 478469
April 2, 1981	. 477783
April 3, 1981	. 477099
Thailand baht (tical):	
March 30–April 2, 1981	$0. 048426
April 3, 1981	. 048379
Venezuela bolivar:	
March 30–April 1, 1981	$0. 232883
April 2, 1981	. 203087
April 3, 1981	. 232883

(LIQ–03–01 O:C:E)

Dated: April 6, 1981.

KENNETH A. RICH,
Chief, Customs Information Exchange.

(T.D. 81–89)

Foreign Currencies—Variances From Quarterly Rate

The following rates of exchange are based upon rates certified to the Secretary of the Treasury by the Federal Reserve Bank of New York, pursuant to section 522(C), Tariff Act of 1930, as amended (31 U.S.C. 372(c)), and reflect variances of 5 per centum or more from the quarterly rate published in T.D. 81–31 for the following countries. Therefore, as to entries covering merchandise exported on the dates listed, whenever it is necessary for Customs purposes to convert such currency into currency of the United States, conversion shall be at the following rates.

Austria schilling:	
March 23, 1981	$0. 067522
March 24, 1981	. 067602
March 25, 1981	. 067476
March 26, 1981	. 066934
March 27, 1981	. 066357

Belgium franc:	
March 23, 1981	$0. 029189
March 24, 1981	. 029300
March 25, 1981	. 029274
March 26, 1981	. 029002
March 27, 1981	. 028769
Denmark krone:	
March 23, 1981	$0. 152184
March 24, 1981	. 152497
March 25, 1981	. 152114
March 26, 1981	. 150602
March 27, 1981	. 149701
Finland markka:	
March 23–25, 1981	Quarterly
March 26, 1981	$0. 246305
March 27, 1981	. 245339
France franc:	
March 23, 1981	$0. 203293
March 24, 1981	. 203707
March 25, 1981	. 203087
March 26, 1981	. 200602
March 27, 1981	. 199800
Germany deutches mark:	
March 23, 1981	$0. 479111
March 24, 1981	. 480238
March 25, 1981	. 479501
March 26, 1981	. 473261
March 27, 1981	. 470588
India rupee:	
March 23–26, 1981	Quarterly
March 27, 1981	$0. 1203
Ireland pound:	
March 23, 1981	$1. 7440
March 24, 1981	1. 7500
March 25, 1981	1. 7460
March 26, 1981	1. 7350
March 27, 1981	1. 7190
Italy lira:	
March 23, 1981	$0. 000960
March 24, 1981	. 000961
March 25, 1981	. 000963
March 26, 1981	. 000956
March 27, 1981	. 000941

Netherlands guilder:	
March 23, 1981	$0.432339
March 24, 1981	.433839
March 25, 1981	.432807
March 26, 1981	.426894
March 27, 1981	.425441
Portugal escudo:	
March 23–24, 1981	$0.017683
March 25, 1981	.017724
March 26, 1981	.017683
March 27, 1981	.017422
Republic of South Africa rand:	
March 23, 1981	$1.2605
March 24, 1981	1.2625
March 25, 1981	1.2595
March 26, 1981	1.2560
March 27, 1981	1.2480
Spain peseta:	
March 23, 1981	$0.011758
March 24, 1981	.011779
March 25, 1981	.011804
March 26, 1981	.011767
March 27, 1981	.011581
Sri Lanka rupee:	
March 23–27, 1981	$0.055249
Switzerland franc:	
March 23, 1981	$0.526815
March 24, 1981	.527287
March 25, 1981	.525210
March 26, 1981	.518672
March 27, 1981	.516796
United Kingdom pound:	
March 23, 1981	$2.2495
March 24, 1981	Quarterly
March 25, 1981	2.2625
March 26, 1981	2.2450
March 27, 1981	2.2260

(LIQ–03–01 O:C:E)

Dated: March 27, 1981.

GWENN KLEIN KIRSCHNER,
Acting Chief,
Customs Information Exchange.

(T.D. 81-90)

Foreign Currencies—Daily Rates for Countries Not on Quarterly List

Rates of exchange based on rates certified to the Secretary of the Treasury by the Federal Reserve Bank of New York for the Brazil cruziero, People's Republic of China yuan, Hong Kong dollar, Iran rial, Philippines peso, Singapore dollar, Thailand baht (tical), and Venezuela bolivar

The Federal Reserve Bank of New York, pursuant to section 522(c), Tariff Act of 1930, as amended (31 U.S.C. 372 (c)), has certified buying rates for the dates and foreign currencies shown below. The rates of exchange, based on these buying rates, are published for the information and use of Customs officers and others concerned pursuant to part 159, subpart C, Customs Regulations (19 CFR 159, subpart C).

Brazil cruzeiro:	
March 23–25, 1980	$0.013323
March 26–27, 1980	.013067
People's Republic of China yuan:	
March 23, 1981	$0.620001
March 24–26, 1981	.616941
March 27, 1981	.610799
Hong Kong dollar:	
March 23, 1981	$0.189825
March 24, 1981	.189466
March 25, 1981	.189430
March 26, 1981	.188929
March 27, 1981	.188679
Iran rial:	
March 23–27, 1981	Not available
Philippines peso:	
March 23–27, 1981	$0.130039
Singapore dollar:	
March 23, 1981	$0.476304
March 24, 1981	.476872
March 25, 1981	.478240
March 26, 1981	.477441
March 27, 1981	.478240
Thailand baht:	
March 23, 1981	$0.048780
March 24–27, 1981	.048426

Venezuela bolivar:
March 23–25, 1981 ..... $0. 232937
March 26–27, 1981 232883

(LIQ–03–01 O:C:E)

Dated: March 27, 1981.

GWENN KLEIN KIRSCHNER,
Acting Chief,
Customs Information Exchange.

(T.D. 81–91)

Synopses of Drawback Decisions

The following are synopses of drawback rates issued September 17, 1980, to March 2, 1981, inclusive, pursuant to sections 22.1 through 22.5, inclusive, Customs Regulations

In the synopses below are listed for each drawback rate approved under 19 U.S.C. 1313(b), the name of the company, the specified articles on which drawback is authorized, the merchandise which will be used to manufacture or produce these articles, the factories where the work will be accomplished, the date the statement was signed, the basis for determining payment, the Regional Commissioner to whom the rate was forwarded, and the date on which it was forwarded.

(DRA–1–09)

Dated: April 9, 1981.

MARILYN G. MORRISON,
Director,
Carriers, Drawback and Bonds Division.

(A) Company: Air Products and Chemicals, Inc.
Articles: Dabco; Dabco LV–33; Dabco WT.
Merchandise: N,-aminoethylpiperazine.
Factory: Paulsboro, N.J.
Statement signed: August 11, 1980.
Basis of claim: Used in, less valuable waste.
Rate forwarded to Regional Commissioner of Customs: Baltimore, February 13, 1981.
Revokes: T.D. 78–94–C.

(B) Company: Bofors Lakeway, Inc.
Articles: Avenge technical, an agricultural herbicide.
Merchandise: Acetophenone.
Factory: Muskegon, Mich.
Statement signed: October 24, 1980.
Basis of claim: Used in.
Rate forwarded to Regional Commissioner of Customs: New York, February 11, 1981.

(C) Company: Chapman Industries, Inc.
Articles: Various steel construction products.
Merchandise: Hot-dipped galvanized coil, cold-rolled steel coil, and galvanized rib lath and diamond mesh.
Factory: Hialeah, Fla.
Statement signed: October 29, 1980.
Basis of claim: Used in, less valuable waste.
Rate forwarded to Regional Commissioner of Customs: Miami, March 2, 1981.

(D) Company: Cosden Oil and Chemical Co.
Articles: Polystyrene.
Merchandise: Styrene monomer.
Factory: Calumet City, Ill.
Statement signed: October 9, 1980.
Basis of claim: Used in.
Rate forwarded to Regional Commissioner of Customs: Houston, March 2, 1981.

(E) Company: Crosby Valve & Gage Co.
Articles: Safety relief valves.
Merchandise: Valve parts and raw castings.
Factories: Wrentham, Mass.; Houston, Tex.
Statement signed: December 5, 1980.
Basis of claim: Appearing in.
Rate forwarded to Regional Commissioner of Customs: Boston, February 19, 1981.
Revokes: T.D. 80–175–D and unpublished headquarters authorization letter dated December 1, 1980.

(F) Company: Degussa Corp.
Articles: DL-Methionine.
Merchandise: Methylmercaptopropionaldehyde (MMP).
Factory: Theodore, Ala.
Statement signed: January 12, 1981.
Basis of claim: Used in.

Rate forwarded to Regional Commissioner of Customs: New Orleans, February 3, 1981.

(G) Company: The Dow Chemical Co.
Articles: MCPA amine.
Merchandise: 2-methyl-4-chlorophenoxy acetic acid (MCPA).
Factory: Midland, Mich.
Statement signed: October 16, 1980.
Basis of claim: Used in.
Rate forwarded to Regional Commissioner of Customs: Chicago, February 3, 1981.

(H) Company: Eli Lilly and Co.
Articles: Cephalexin monohydrate (pulvules and bulk); cephalexin monohydrate for suspension; cephalexin monohydrate (bulk powder); cephalexin monohydrate for dry products (bulk powder); keflex oral suspension, pulvules, and tablets.
Merchandise: Dimethyl formamide; triethylamine; methyl acetoacetate; cephalexin special.
Factories: Lafayette, Clinton, and Indianapolis, Ind.
Statement signed: March 13, 1980.
Basis of claim: Used in.
Rate forwarded to Regional Commissioner of Customs: Chicago, February 9, 1981.

(I) Company: Eli Lilly and Co.
Articles: Cephalothin sodium (keflin); Cephaloridine (loridine); cefazolin sodium (kefzol); cephaloglycine hydrate (kafocin); cefamandole nafate (mandol) in bulk and finished forms; intermediate products as listed.
Merchandise: Methionine feed grade; phosphorus pentachloride; oxalic acid technical; triethylamine; D-mandelic acid; thionyl chloride; quinoline; tetrazole thiol.
Factories: Clinton, Indianapolis, and Lafayette, Ind.
Statement signed: April 25, 1980.
Basis of claim: Used in.
Rate forwarded to Regional Commissioner of Customs: Chicago, February 19, 1981.
Revokes: T.D. 73–324–P, T.D. 79–213–E, and T.D. 67–202–B.

(J) Company: The Firestone Tire & Rubber Co.
Articles: Polyvinyl chloride resin; solution resin; dispersion resin; emulsion resin.
Merchandise: Vinyl chloride monomer.
Factories: Pottstown, Pa.; Perryville, Md.; Addis, La.

Statement signed: December 8, 1980.
Basis of claim: Used in.
Rate forwarded to Regional Commissioner of Customs: Chicago, February 26, 1981.

(K) Company: Frank Ix & Sons.
Articles: Woven piece goods.
Merchandise: Single textured polyester yarn and 2 ply (2/150) textured polyester yarn.
Factories: Charlottesville, Va.; Lexington, N.C.; New Holland, Pa.
Statement signed: September 26, 1978.
Basis of claim: Used in.
Rate forwarded to Regional Commissioner of Customs: New York, January 22, 1981.
Revokes: T.D. 76–319–N.

(L) Company: Globe Products Co., Inc.
Articles: Canned fruit, cream fillings, jams, jellies, and other fruit or vegetable specialties.
Merchandise: Liquid and hard refined sugar.
Factory: Clifton, N.J.
Statement signed: October 16, 1980.
Basis of claim: Appearing in.
Rate forwarded to Regional Commissioner of Customs: New York, February 13, 1981.
Revokes: T.D. 55526–B.

(M) Company: Guilford Mills, Inc.
Articles: Beamed yarn.
Merchandise: Nylon yarn, polyester yarn.
Factory: Greensboro, N.C.
Statement signed: October 15, 1980.
Basis of claim: Appearing in.
Rate forwarded to Regional Commissioner of Customs: New York, January 27, 1981.

(N) Company: Hammond Lead Products, Inc.
Articles: Various lead products.
Merchandise: Lead pigs and/or ingots.
Factories: Hammond, Ind.; Pottstown, Pa.
Statement signed: October 21, 1980.
Basis of claim: Appearing in.
Rate forwarded to Regional Commissioner of Customs: Chicago, February 9, 1981.
Revokes: T.D. 53950–D.

O) Company: Hitachi Magnetics Corp.
(Articles: Base and additive cobalt-rare earth magnet powder and magnets manufactured therefrom.
Merchandise: Samarium oxide.
Factory: Edmore, Mich.
Statement signed: November 4, 1980.
Basis of claim: Appearing in.
Rate forwarded to Regional Commissioner of Customs: Chicago, March 2, 1981.

(P) Company: Hooker Chemicals & Plastics Corp., Durez Division.
Articles: Diallylphthalate granular molding compounds.
Merchandise: Diallylphthalate resin.
Factories: North Tonawanda, N.Y.; Kenton, Ohio.
Statement signed: October 15, 1980.
Basis of claim: Used in.
Rate forwarded to Regional Commissioner of Customs: New York, February 20, 1981.

(Q) Company: Intersil, Inc.
Articles: Systems, add-on computer memory systems, memory boards and microsystems products.
Merchandise: Metal oxide semiconductor (MOS) dynamic random access memory (RAM) integrated circuits by memory capacity 4K, 8K, 16K, 32K, 64K.
Factory: Sunnyvale, Calif.
Statement signed: December 15, 1980.
Basis of claim: Appearing in.
Rate forwarded to Regional Commissioner of Customs: San Francisco, February 4, 1981.

(R) Company: Mostek Corp.
Articles: Partially and fully fabricated semiconductor wafers.
Merchandise: Raw silicon wafers.
Factories: Carrollton, Tex.; Colorado Springs, Colo.
Statement signed: March 17, 1980.
Basis of claim: Used in.
Rate forwarded to Regional Commissioners of Customs: San Francisco and Houston, September 17, 1980.

(S) Company: PPG Industries, Inc.
Articles: Tempered float glass.
Merchandise: Clear float glass.
Factory: Mount Holly Springs, Pa.
Statement signed: November 4, 1980.

Basis of claim: Appearing in.
Rate forwarded to Regional Commissioners of Customs: Baltimore, December 31, 1980.
Revokes: Unpublished headquarters authorization letter dated October 14, 1980.

(T) Company: Phillips Petroleum Co.
Articles: Petroleum products.
Merchandise: Crude petroleum or petroleum derivatives.
Factories: Borger, Houston, and Sweeny, Tex.; Kansas City, Kans.; Woods Cross, Vt.; Great Falls, Mont.; Toledo, Ohio.
Statement signed: August 5, 1980.
Basis of claim: As provided in the drawback rate contained in section 22.6(g–1) of the Customs Regulations.
Rate forwarded to Regional Commissioner of Customs: Chicago, January 19, 1981.
Revokes: T.D. 66–172(2), as amended by T.D. 68–297(2) and T.D. 72–338(1).

(U) Company: Rhone-Poulenc, Inc.
Articles: MCPA ester; Buctril M.
Merchandise: Methyl chlorophenoxy acetic acid (MCPA).
Factory: Portland, Oreg.
Statement signed: September 6, 1980.
Basis of claim: Used in.
Rate forwarded to Regional Commissioner of Customs: New York, January 29, 1981.

(V) Company: Sundstrand Corp.
Articles: Heat transfer surfaces used as air-conditioning devices.
Merchandise: Level wound, bright annealed copper tubing; aluminum alloy in coil.
Factory: Dowagiac, Mich.
Statement signed: September 8, 1980.
Basis of claim: Appearing in.
Rate forwarded to Regional Commissioner of Customs: New York, January 21, 1981.

(W) Company: UOP Inc., UOP Process Division.
Articles: Aluminum oxide platinum catalyst.
Merchandise: Chloroplatinic acid solution (CPA).
Factories: Shreveport, La.; McCook, Ill.
Statement signed: July 31, 1980.
Basis of claim: Appearing in.

Rate forwarded to Regional Commissioners of Customs: San Francisco, Houston, New Orleans, and New York, January 16, 1981.
Revokes: T.D. 70–12–D.

(X) Company: Universal Electric Co.
Articles: Electric motors and parts.
Merchandise: Cold-rolled commercial quality lamination steel coils, aluminum ingots.
Factories: Owosso, Mich.; Ripley, Tenn.; Kosciusko, Miss.; Altavista, Va.
Statement signed: June 19, 1980.
Basis of claim: Used in, less valuable waste as to steel; appearing in as to aluminum.
Rate forwarded to Regional Commissioner of Customs: Chicago. January 12, 1981.
Revokes: Unpublished headquarters authorization letter dated July 24, 1980.

(Y) Company: VSI Corp., Aerospace Group.
Articles: Aerospace fasteners.
Merchandise: Sponge titanium and titanium ingot or billet.
Factories: Chatsworth and City of Industry, Calif.
Statement signed: December 18, 1980.
Basis of claim: Appearing in.
Rate forwarded to Regional Commissioner of Customs: Los Angeles, January 29, 1981.
Revokes: T.D. 72–199–E.

(Z) Company: The Youngstown Steel Door Co.
Articles: Railroad boxcar doors.
Merchandise: Hot-rolled steel sheets.
Factory: Youngstown, Ohio.
Statement signed: October 8, 1980.
Basis of claim: Appearing in.
Rate forwarded to Regional Commissioners of Customs: Baltimore, Chicago, New York, December 18, 1980.

(T.D. 81–92)

Drawback Contracts (Rates)

There follows an approved drawback contract (rate). Anyone who can comply with the conditions of this contract may adhere

to it by notifying a Regional Commissioner of Customs in writing of its intentions to do so and providing him with the following information:

1. Name and address of adherent;
2. Factories which will operate under the contract;
3. If a corporation, the names of officers or persons with power of attorney who will sign drawback documents on behalf of adherent.

This contract is designed to simplify drawback procedures.

Dated: April 10, 1981.

GEORGE C. STEUART
(For Marilyn G. Morrison, Director,
Carriers, Drawback and Bonds Division).

DRAWBACK CONTRACT UNDER 19 U.S.C. 1313(b) FOR REFINED SUGAR

Imported merchandise or drawback products to be designated as the basis for drawback on the exported products	*Duty-paid, Duty-free, or domestic merchandise of the same kind and quality as that designated which will be used in the production of the exported products*
1. Granulated or liquid sugar for manufacturing, containing sugar solids of not less than 99.5 sugar degrees.	1. Granulated or liquid sugar for manufacturing, containing sugar solids of not less than 99.5 sugar degrees.
2. Granulated or liquid sugar for manufacturing containing sugar solids of less than 99.5 sugar degrees.	2. Granulated or liquid sugar for manufacturing, containing sugar solids of less than 99.5 sugar degrees.

The sugars listed above test within three-tenths of a degree on the polariscope. Sugars in each column are completely interchangeable with the sugars directly opposite and designation will be made on this basis only.

The designated sugar on which claims for drawback will be based will be so similar in quality to the sugar used in manufacture of the products exported with drawback that the sugar used in manufacture would, if imported, be subject to the same amount of duty paid on a like quantity of designated sugar. Differences in value resulting from nonquality factors, such as market fluctuation, will not affect the allowance of drawback.

EXPORTED ARTICLES ON WHICH DRAWBACK WILL BE CLAIMED

Edible substances (including confectionery) and/or beverages and/or ingredients therefor.

GENERAL STATEMENT

We process sugar into the above products for our own account. We may process the above-described sugars for the account of other producers or other producers may process these sugars for our account under contract as outlined in T.D. 55027(2) and T.D. 55207(1).

PROCESS OF MANUFACTURE OR PRODUCTION

The sugars are subjected to one or more of the following operations to form the desired product(s):

1. Mixing with other substances.
2. Cooking with other substances.
3. Boiling with other substances.
4. Baking with other substances.
5. Additional similar processes.

MULTIPLE PRODUCTS—RELATIVE VALUES

Not applicable.

WASTE

Unless the claim for drawback is based on the quantity of sugar appearing in the exported articles, the drawback claimant agrees to keep records to establish the value (or the lack of value), the quantity, and the disposition of any waste that results from manufacturing the exported articles. If no waste results, the drawback claimant agrees to keep records to establish that fact.

LOSS OR GAIN

The drawback applicant agrees to keep records showing the extent of any loss or gain in net weight or measurement of the sugar caused by atmospheric conditions, chemical reactions, or other factors.

PROCEDURES AND RECORDS MAINTAINED

We will maintain records to establish:

1. The identity and specifications of the merchandise we designate;
2. The quantity of merchandise of the same kind and quality as the designated merchandise we used to produce the exported articles;

3. That, within 3 years after receiving it at our factory, we used the designated merchandise to produce articles. During the same 3-year period, we produced the exported articles.

1. If claims are to be made on an "appearing in" basis, the remainder of this sentence should read "appearing in the exported articles we produced."

2. The date of production is the date an article is completed.

Our records establishing our compliance with these requirements will be available for audit by Customs during business hours. We understand that drawback is not payable without proof of compliance with title 19, United States Code, section 1313(b), and part 22 of the Customs Regulations.

INVENTORY PROCEDURES

Our inventory procedures will show how we will satisfy the legal requirements discussed under the heading "Procedures and records maintained." We understand that if our records do not show that we satisfy those legal requirements, drawback cannot be paid.

BASIS OF CLAIM FOR DRAWBACK

The drawback claimant agrees to claim drawback on the quantity of sugar used in producing the exported articles only if there is no waste in the manufacturing operation.

If there is no waste or if the drawback claimant does not want to keep records of any waste involved, the drawback claimant may claim drawback on the quantity of eligible sugar that appears in the exported articles.

If there is valuable waste recovered from the manufacturing operation and records are kept which show the quantity and value of the waste, the drawback claimant may claim drawback on the quantity of eligible material used to produce the exported articles less the amount of that sugar which the value of the waste would replace.

AGREEMENTS

The corporation specifically agrees that it will:

1. Comply fully with the terms of this statement when claiming drawback;

2. Open its factory and records for examination at all reasonable hours by authorized Government officers;

3. Keep its drawback related records and supporting data for at least 3 years from the date of liquidation of any drawback claim predicated in whole or in part upon this statement;

4. Keep this statement current by reporting promptly to the regional commissioner who liquidates its claims any changes in the

number or locations of its offices or factories, the corporate name, or the corporate organization by succession or reincorporation;

5. Keep a copy of this statement on file for ready reference by employees and require all officials and employees concerned to familiarize themselves with the provisions of this statement; and,

6. Issue instructions to insure proper compliance with title 19, United States Code, section 1313(b), part 22 of the Customs Regulations and this statement.

ERRATUM

In CUSTOMS BULLETIN volume 15, No. 12, dated March 25, 1981, T.D. 81–50, the following rate should be corrected to:

Hong Kong dollar:
February 27, 1981 ..... $0. 187371

International Trade Commission Notices

Investigations by U.S. International Trade Commission

DEPARTMENT OF THE TREASURY, *April 16, 1981.*

The appended notices relating to investigations by the U.S. International Trade Commission are published for the information of Customs Officers and others concerned.

R. E. CHASEN,
Commissioner of Customs.

In the Matter of CERTAIN STEEL ROD TREATING APPARATUS AND COMPONENTS THEREOF	Investigation No. 337–TA–97

Notice of Termination of Investigation as to One Respondent and of Addition of Another Respondent

AGENCY: U.S. International Trade Commission.

ACTION: Termination of investigation as to respondent Ashlow Steel & Engineering Co., Ltd., and addition of Ashlow Ltd., as a party respondent in the above-captioned investigation.

SUMMARY: Notice is hereby given that on the basis of a motion filed by Ashlow Steel & Engineering Co., Ltd., and agreed to by complainant Morgan Construction Co. (concurrence 2–13–81), the Commission has granted motion 97–1 to terminate the above-captioned investigation as to respondent Ashlow Steel & Engineering Co., Ltd. Notice is also given that the Commission has granted complainant's motion, designated as complementary motion to respondent's motion 97–1, to add Ashlow Ltd., as a party respondent in investigation No. 337–TA–97.

AUTHORITY: The authority for the Commission's action is contained in section 337 of the Tariff Act of 1930 (19 U.S.C. 1337) and

in sections 210.22 (19 CFR 210.22) and 210.51 (19 CFR 210.51) of the Commission's Rules of Practice and Procedure.

SUPPLEMENTARY INFORMATION: Upon receipt of a complaint filed by Morgan Construction Co., the Commission instituted investigation No. 337–TA–97 on January 23, 1981, to determine whether there is a violation of section 337 of the Tariff Act of 1930 by reason of the importation into and sale in the United States of certain steel rod treating apparatus and components thereof. Complainant Morgan alleges that the accused steel rod treating apparatus infringes claims 1–7 of U.S. Letters Patent 3,390,871. Notice of the Commission's investigation was published in the Federal Register on January 28, 1981 (46 F.R. 9263).

On February 13, 1981, respondent Ashlow Steel & Engineering Co., Ltd., moved that it be dismissed as a party respondent in the above-captioned proceeding (motion 97–1). Complainant agreed to the dismissal in a concurrence filed on February 24, 1981. Complainant further moved that Ashlow Ltd., be added as a party respondent (complementary motion to respondent's motion 97–1).

On March 12, 1981, motion 97–1 and complementary motion 97–1 were certified to the Commission by the presiding officer, who recommended that both motions be granted.

FOR FURTHER INFORMATION CONTACT: Warren H. Maruyama, Esq., Office of the General Counsel, U.S. International Trade Commission; telephone 202–523–0143.

By order of the Commission.

Issued: April 6, 1981.

KENNETH R. MASON,
Secretary.

In the Matter of	
CERTAIN HEADBOXES AND PAPERMAKING MACHINE FORMING SECTIONS FOR THE CONTINUOUS PRODUCTION OF PAPER, AND COMPONENTS THEREOF	Investigation No. 337–TA–82

Notice of Issuance of Exclusion Order

AGENCY: U.S. International Trade Commission.

ACTION: Issuance of exclusion order.

SUMMARY: On April 8, 1981, the Commission issued its action and order in the above-captioned investigation. The Commission ordered that multi-ply headboxes and papermaking machine forming sections

for the continuous production of paper, and components thereof, that infringe claims 1, 12, 15, 16, or 22 of U.S. Letters Patent RE 28,269 and claims 4, 5, or 6 of U.S. Letters Patent 3,923,593 be excluded from entry into the United States for the remaining terms of said patents, except under license.

SUPPLEMENTARY INFORMATION: The Commission instituted this investigation on April 8, 1980 (45 F.R. 23832), to determine whether there is a violation of section 337 of the Tariff Act of 1930[1] (19 U.S.C. 1337) in connection with the importation into the United States and the sale therein of certain headboxes and papermaking machine forming sections for the continuous production of paper, and components thereof. On March 23, 1981, the Commission determined (Commissioner Stern dissenting) that there is a violation of section 337 in the unauthorized importation and sale of multi-ply headboxes and papermaking machine forming sections for the continuous production of paper, and components thereof, which are produced in accordance with claims 1, 12, 15, 16, and 22 of U.S. Letters Patent RE 28,269 and claims 4, 5, and 6 of U.S. Letters Patent 3,923,593. Having determined (Commissioner Stern not voting) that public interest considerations do not preclude relief in this case, the Commission also determined (Chairman Alberger dissenting and Commissioner Stern not voting) that the appropriate remedy is an order directing that the infringing articles be excluded from entry into the United States for the remaining terms of the aforesaid patents, except under license by the patent owner.

Copies of the Commission's action and order and any other public documents on the record of this investigation are available for inspection by the public during official working hours (8:45 a.m. to 5:15 p.m.) in the Office of the Secretary, U.S. International Trade Commission, 701 E Street NW., Room 161, Washington, D.C. 20436, telephone 202-523-0161.

FOR FURTHER INFORMATION CONTACT: Phyllis N. Smithey, Esq., Office of the General Counsel, U.S. International Trade Commission, telephone 202-523-0321.

By order of the Commission.

Issued: April 8, 1981.

KENNETH R. MASON,
Secretary.

---

[1] In determining that there is a violation of sec. 337, Commissioner Bedell determined that the unfair methods of competition and unfair acts of the respondents have had the effect or tendency to substantially injure an industry, efficiency and economically operated, in the United States.

Investigation No. 731–TA–41 (Preliminary)

TUBELESS-TIRE VALVES FROM THE FEDERAL REPUBLIC OF GERMANY

Notice of Institution of Preliminary Antidumping Investigation and Scheduling of Conference

AGENCY: U.S. International Trade Commission.

ACTION: Institution of preliminary antidumping investigation to determine whether there is a reasonable indication that an industry in the United States is materially injured, or is threatened with material injury, or the establishment of an industry is materially retarded, by reason of imports from the Federal Republic of Germany of tubeless-tire valves allegedly sold or likely to be sold at less than fair value. For the purposes of this investigation, the term "tubeless-tire valve" means any tubeless-tire valve suitable for use with passenger automobile and light truck wheels,[1] provided for in item 692.32 of the Tariff Schedules of the United States.

EFFECTIVE DATE: April 9, 1981.

FOR FURTHER INFORMATION CONTACT: John MacHatton, Supervisory Investigator, 202–523–0439.

SUPPLEMENTARY INFORMATION:

BACKGROUND

This investigation is being instituted following receipt of a revised petition on April 9, 1981, from the Nylo-Flex Manufacturing Co., Inc., Mobile, Ala. Originally filed on February 24, 1981, Nylo-Flex's petition was found by Commerce to be inadequate, and on March 13, 1981, the company withdrew its complaint to make the required adjustments. Accordingly, the U.S. International Trade Commission terminated its investigation (No. 731–TA–39 (preliminary)) pending the petitioner's resubmission. Notice of the termination of investigation No. 731–TA–39 (preliminary) and the cancellation of the public conference therefore was published in the Federal Register of March 18, 1981 (46 F.R. 17312).

AUTHORITY

Section 733(a) of the Tariff Act of 1930 (19 U.S.C. 1673b(a)) requires the Commission to make a determination of whether there is a reasonable indication that an industry in the United States is materi-

[1] Light trucks are defined, for purposes of this investigation, as trucks having a gross vehicle weight (GVW) of 10,000 pounds or less.

ally injured, or is threatened with material injury, or the establishment of an industry in the United States is materially retarded, by reason of imports of the merchandise which is the subject of the investigation by the administering authority. Such a determination must be made within 45 days after the date on which a petition is filed under section 732(b) or on which notice is received from the Department of Commerce of an investigation commenced under section 732(a). Accordingly, the Commission, on April 9, 1981, instituted preliminary antidumping investigation No. 731–TA–41. This investigation will be subject to the provisions of part 207 of the Commission's Rules of Practice and Procedure (19 CFR 207, 44 F.R. 76457) and particularly, subpart B thereof.

WRITTEN SUBMISSIONS

Any person may submit a written statement of information pertinent to the subject matter of this investigation to the Commission on or before May 6, 1981. A signed original and 19 copies of such statements must be submitted.

Any business information which a submitter desires the Commission to treat as confidential shall be submitted separately and each sheet must be clearly marked at the top "Confidential business data". Confidential submissions must conform with the requirements of section 201.6 of the Commission's Rules of Practice and Procedure (19 CFR 201.6). All written submissions, except for confidential business data, will be available for public inspection.

CONFERENCE

The Director of Operations of the Commission has scheduled a conference in connection with this investigation for 10 a.m., e.s.t., on April 30, 1981, at the U.S. International Trade Commission Building, 701 E Street NW., Washington, D.C. Parties wishing to participate in the conference should contact the supervisory investigator for the investigation, Mr. John MacHatton, 202–523–0439. It is anticipated that parties in support of the petition for antidumping duties and parties opposed to such petition will each be collectively allocated one hour within which to make an oral presentation at the conference. Further details concerning the conduct of the conference will be provided by the supervisory investigator.

INSPECTION OF PETITION

The petition filed in this case is available for public inspection at the Office of the Secretary, U.S. International Trade Commission.

By order of the Commission.

Issued: April 10, 1981.

KENNETH R. MASON,
Secretary.

Index

U.S. Customs Service

Treasury decisions:	T.D. No.
Aero Transit, Inc.	81-87
Foreign currencies:	
Daily certified rates; March 30–April 3, 1981	81-88
Rates which varied from quarterly rate; March 23–27, 1981	81-89
Daily certified rates; March 23–27, 1981	81-90
In Transit Truck Procedures, United States and Canada, Customs Regulations	81-85
Section 4.93, Customs Regulations amended, Chile to the list of nations whose registered vessels are permitted to transport certain articles coastwise	81-84
Tariff-Rate-Quota for the calendar year 1981, on fish dutiable under item 110.50, Tariff Schedules of the United States (TSUS)	81-86
Synopses of drawback decisions	81-91
Aminoethylpiperazine	81-91-A
Acetophenone	81-91-B
Coil, galvanized and cold rolled	81-91-C
Styrene monomer	81-91-D
Valve parts and raw castings	81-91-E
Methylmercaptopropionaldehyde (MMP)	81-91-F
2-methyl-4-chlorophenoxy acetic acid	81-91-G
Dimethyl formamide	81-91-H
Phosphorus pentachloride	81-91-I
Vinyl chloride monomer	81-91-J
Polyester yarn	81-91-K
Sugar, liquid and hard refined	81-91-L
Yarn, nylon and polyester	81-91-M
Lead pigs and ingots	81-91-N
Samarium oxide	81-91-O
Diallylphthalate granular molding compounds	81-91-P
Integrated circuits	81-91-Q
Silicon wafers, raw	81-91-R
Glass, clear float	81-91-S
Petroleum and petroleum derivatives	81-91-T
Methylchlorophenoxy acetic acid	81-91-U
Copper tubing	81-91-V
Chloroplatinic acid solution	81-91-W
Steel coils; aluminum ingots	81-91-X
Titanium, sponge, ingot, and billet	81-91-Y
Steel sheets, hot rolled	81-91-Z

DEPARTMENT OF THE TREASURY
U.S. CUSTOMS SERVICE
WASHINGTON, D.C. 20229

OFFICIAL BUSINESS
PENALTY FOR PRIVATE USE, $300

POSTAGE AND FEES PAID
DEPARTMENT OF THE TREASURY (CUSTOMS)
(TREAS. 552)

U.S. GOVERNMENT PRINTING OFFICE: 1981

15/18

Customs Bulletin

Regulations, Rulings, Decisions, and Notices concerning Customs and related matters

and Decisions

of the United States Court of Customs and Patent Appeals and the United States Court of International Trade

Vol. 15 MAY 6, 1981 No. 18

NEWARK PUBLIC LIBRARY

MAY 2 1981

U. S. GOVT. PUBS.
DEPOSITORY 376

This issue contains

T.D. 81-93 through 81-108
C.A.D. 1262
Slip Op. 81-29 and 81-30
International Trade Commission Notices

THE DEPARTMENT OF THE TREASURY
U.S. Customs Service

T 1.11/3:

NOTICE

The abstracts, rulings, and notices which are issued weekly by the U.S. Customs Service are subject to correction for typographical or other printing errors. Users may notify the U.S. Customs Service, Logistics Management Division, Washington, D.C. 20229, of any such errors in order that corrections may be made before the bound volumes are published.

For sale by the Superintendent of Documents, U.S. Government Printing Office, Washington, D.C. 20402. Price: $2.25 (single copy domestic); $2.85 (single copy foreign). Subscription price: $85.00 a year domestic; $106.25 a year foreign.

U.S. Customs Service

Treasury Decisions

(T.D. 81-93)

[This Treasury Decision Has Been Canceled]

(T.D. 81-94)

Tariff Classification—Region II Rulings Program

Manual Supplement 2300-09, setting forth guidelines for the issuance of selected tariff classification rulings by region II, reproduced

Reproduced below is the text of Manual Supplement 2300-09, dated February 6, 1981, which relates to the issuance of selected tariff classification rulings by the Regional Commissioner of Customs, region II (New York).

Under T.D. 80-285 (45 F.R. 80100), which established the region II rulings program, recipients of rulings from region II are given the right to appeal those rulings to Customs Headquarters in Washington, D.C. Such appeals must be made promptly, following the procedures set forth in section 5 of Manual Supplement 2300-09, as set forth below.

JOHN T. ROTH
(For Harvey B. Fox, Director,
Classification and Value Division).

---

1. PURPOSE

This manual supplement sets forth the guidelines to be used in selecting the tariff classification ruling requests to be acted upon by region II and in selecting those to be referred to headquarters for action. These guidelines also cover the circumstances when headquarters will refer tariff classification ruling requests to region II for action. Information is also included in this manual supplement concerning

appeals from region II rulings, headquarters' review of region II rulings for which publication is proposed, and the monitoring of region II rulings generally for consistency with the law, the regulations, and administrative and judicial precedents.

2. Background

On December 3, 1980, T.D. 80–285 was published in the Federal Register (45 F.R. 80100) amending part 177 of the Customs Regulations (19 CFR part 177) to authorize the Regional Commissioner, New York (region II), to issue selected tariff classification rulings. These amendments became effective on January 2, 1981. As noted in the explanatory material contained in T.D. 80–285, the Director, Classification and Value Division, Headquarters, has the responsibility for issuing the guidelines to be used by the Regional Commissioner in determining the ruling requests to be acted upon by region II and those which should be referred to headquarters for action. The Director, Classification and Value Division, will monitor the rulings issued by region II for compliance with the law, regulations, and applicable precedents. Region II rulings which are recommended by the Regional Commissioner for publication will be reviewed by headquarters prior to publication.

3. Action

The following guidelines will be used in identifying the tariff classification ruling requests to be acted upon by region II, whether received in New York or at headquarters. The guidelines also provide for the handling of appeals of rulings issued by region II, for the monitoring by headquarters of region II rulings, and for the review of rulings issued by region II which are recommended for publication in the Customs Bulletin.

These guidelines will apply only with respect to requests for tariff classification rulings which are received on or after January 2, 1981. Requests for rulings received prior to that date will be processed by headquarters.

4. Guidelines for the Issuance of Tariff Classification Rulings By Region II

The authority delegated to region II by T.D. 80–285 extends only to rulings requested with respect to prospective transactions. The transactions for which rulings are requested involve many specialty areas, many types of ruling applicants and correspondents, and an infinite variety of fact patterns. Some of the requests received by region II will be readily identifiable as items appropriately ruled

upon or otherwise acted upon by region II. Other requests will be more complex, often involving issues other than those specifically set forth in the request. Whether these requests should be selected for region II action or referred to headquarters will be determined by application of the guidelines set forth below and the exercise of good judgment.

It is likely that region II will receive correspondence which does not require a ruling by either region II or headquarters, such as inquiries involving pending transactions. These items should be referred by region II directly to the port or district where the transaction is pending for reply (or processing in accordance with the internal advice procedures, if applicable). In such instances, the correspondent will be notified of the referral.

Headquarters' experience with the administrative rulings program indicates that tariff classification ruling requests are likely to fall into 1 of 14 categories, as described below in paragraphs A through N. Requests in certain of the categories will be handled exclusively by region II, while requests which fall into other categories will be processed solely by headquarters. In the remaining categories, however, a determination of the proper office to handle the request must be made using the guidelines provided.

A. *Inquiries answerable by information letters.*—Any ruling request or inquiry which would be answered best by an information letter, as defined in section 177.1(d)(2) of the Customs Regulations (19 CFR 177.1(d)(2)), will be acted upon by region II. Letters of this nature received by headquarters will be referred to region II for reply.

B. *Ruling requests in which no issues are raised.*—In this category of ruling requests, the correspondent will make no classification claims or claims for exemptions, or otherwise offer any specific suggestions as to how the request should be answered. The classifications in this category of requests will be arrived at by routine application of the language of specific provisions or pertinent headnotes or of other fundamental rules of construction. This category of ruling requests will be acted upon by region II unless action by headquarters would be appropriate under one or more of the guidelines set forth below.

C. *Ruling requests involving unsupported classification claims.*—Requests in this category will be similar in complexity to those requests where no claims are made, except that the claims which are made will be frivolous or otherwise based on contentions patently lacking in merit. Correspondence of this nature will often be from businessmen, tourists, or other correspondents showing an obvious unfamiliarity with classification principles. An example of this type of inquiry could be one in which the correspondent seeks to avoid

a specific higher rate provision in favor of a free-rate or lower rate basket provision in the interest of "national trade policy" or other reasons clearly frivolous and not pertinent to the classification of the merchandise. This category of ruling requests will be acted upon by region II unless bona fide issues warranting headquarters' attention are raised. In this regard, it should be noted that the fact that the ruling request is from a customhouse broker or other correspondent for whom Customs expertise may be presumed would not in itself remove a case from this category or from handling by region II. However, requests which raise real social or economic issues should be referred to headquarters under paragraph L, below.

D. *Ruling requests involving a uniform classification practice.*—Any ruling request which alleges the existence of a uniform and established classification practice based on liquidations, or which will result in a classification based on uniform liquidations rather than on the normal application of the tariff schedules, the headnotes, or the usual rules of construction will be referred to headquarters for action.

E. *Ruling requests involving special tariff classification provisions.*—Ruling requests which involve the entitlement to a conditional exemption from duty under any special tariff classification provision will be referred to headquarters for action unless it merely involves technical details concerning a prospective exemption claim normally handled locally. For example, if the requirements of a specific port concerning the filing of documentation or other evidence of entitlement are at issue, the matter will be referred to that port for action. Among the ruling requests in this category warranting headquarters' attention are those which present such issues as substantial transformation, advancement in condition, further fabrication, diplomatic courtesy, application of the Florence agreement, or other substantive issues relating to entitlement to free-rate provisions in schedule 8, TSUS, the Generalized System of Preferences, or any other conditional exemption or special provision.

F. *Ruling requests involving inconsistent precedents.*—Any ruling request concerning a tariff classification to which two or more precedents are pertinent, whether administrative or judicial, and the precedents are in any material respect inconsistent, will be referred for headquarters' action. This guideline applies even when one or more of the precedents is a region II ruling. For further instructions regarding requests involving the application of judicial precedents, see paragraph K, below.

G. *Ruling requests involving reconsiderations.*—Any ruling request in which a reconsideration of a ruling (whether issued by headquarters or region II) is requested, or any matter which involves a pertinent administrative precedent which region II believes should be recon-

sidered, will be referred to headquarters. However, correspondence in which a reconsideration of a region II ruling is requested from region II, as opposed to headquarters (see sec. 5, below), will not be referred to headquarters unless (1) the submission of new material or information makes the referral to headquarters appropriate under another guideline, or (2) region II believes that favorable action on the request (i.e., modification or reversal of the earlier region II ruling) is appropriate. Whenever requests for reconsideration are not referred to headquarters, the correspondent will be advised of the right to appeal or protest.

H. *Ruling requests involving issues of fact.*—Ruling requests involving bona fide issues of fact will be referred to headquarters for action. The issues of fact contemplated by this guideline are present in those ruling requests where there is a conflict in the evidence present in the materials in the case file, or where the evidence present may be in conflict with information available from reliable secondary sources. For example, a bona fide issue of fact exists (1) if a ruling request includes a private laboratory analysis which is at variance with an official Customs Laboratory report, or (2) if information furnished by the party requesting the ruling is contradicted by information found in pertinent trade media. An issue of fact does not exist because the record is incomplete or pertinent facts or information is not known (for whatever reason). Similarly, an issue of fact does not exist because of bare allegations as to the existence of such an issue and does not result from the presentation of nonauthoritative evidence regarding the facts.

I. *Ruling requests presenting multiple issues.*—Ruling requests involving merchandise where the tariff classification is contingent upon a determination outside the tariff classification area, such as valuation or appraisement, will be referred to headquarters. However, a piecemeal disposition of the ruling request would be appropriate when the multiple issues presented are clearly separable. In such a situation, region II will respond to the classification aspect(s) and would advise the party making the request that the balance of the issues presented have been referred to headquarters for separate reply.

Ruling requests which might be considered to be of a "multi-issue" type because different types of merchandise are involved will be handled by region II if they otherwise qualify. In appropriate circumstances, parties requesting rulings will be informed that the Customs Service cannot classify all of the items in a catalog or a lengthy list of items; in such cases, an effort will be made to furnish those parties with as much useful information as it is practical to furnish.

J. *Ruling requests containing legal briefs.*—Some requests for rulings, particularly those submitted on behalf of importers or other interested parties by attorneys, may contain sophisticated arguments advocating

the application of a particular tariff provision, precedent, or concept. Ruling requests of this type will generally be acted upon by headquarters. Region II should refer such requests to headquarters unless it concludes (1) that both the arguments contained in the request, and the tariff classification advocated, are correct, and (2) that such conclusions are supported by uniform precedents and would have been reached by region II notwithstanding the arguments made in the request.

K. *Ruling requests involving the application of judicial precedents.*—While one of the purposes of the region II ruling program is to utilize the national import specialists' knowledge of legal precedents pertinent to the classification of merchandise, this resource will only be used to apply judicial precedents which are pertinent because the merchandise which was the subject of the precedent litigation was the same or similar to the merchandise to be ruled upon. However, a ruling request which seeks the application of legal precedents to merchandise of a different class or kind than that involved in the precedents will be referred to headquarters for a decision. Any classification requiring the application of rules of construction, whether found in headnotes, judicial precedents, or elsewhere, will be referred to headquarters whenever the application of two or more of such rules produces results that are inconsistent or when, in determining relative specificity, the application of the rules appears to produce ambiguous, impractical, unreasonable, or illogical results.

L. *Ruling requests having the potential for unusual social or economic impact.*—Ruling requests having the potential for unusual social or economic impact, or the potential for national publicity, will be referred to headquarters for action. This category of cases may include matters where there is special public attention or interest, matters involving international trade organizations or foreign governments, or matters where Customs' action may be of interest to other Government agencies having responsibilities in the area of national trade policy.

M. *Pending issues.*—Region II will issue no rulings on issues which, to region II's knowledge, the ruling applicant has pending in the form of an appeal, protest, or request for internal advice, or before the U.S. Court of International Trade or any other court. Unless the referral of correspondence of this type to headquarters would serve some useful purpose, region II will prepare a brief response to the ruling applicant explaining that a ruling on the issue(s) raised cannot be furnished because of the pendency of the related matter(s). A copy of that response, together with the incoming correspondence, will be forwarded to each office holding the primary file(s) in the pending

matter(s) in order that a complete record of the matter may be maintained in the event of litigation.

N. *Other ruling requests.*—In general, those ruling requests which are not disposed of by application of the foregoing guidelines will be handled by headquarters. However, in distinguishing between matters which can be effectively acted upon by region II and those which are more appropriately handled by headquarters, it should be borne in mind that the region II rulings program seeks to utilize the expertise of the national import specialists in responding to classification inquiries or ruling requests which involve well-settled areas or issues easily resolved by reference to precedents. Ideally, this will permit headquarters to concentrate its efforts on those matters in which its expertise may best be utilized, including the more complex ruling requests, ruling requests involving novel issues, and other matters which headquarters action is required by law or regulations.

However, region II should not fail to consider acting on a ruling request simply because the issues raised are complex or new. Similarly, region II will not be disqualified from responding to a matter because its consideration of the issue would have been precluded had it been raised in connection with an application for internal advice or in connection with a request for further review of a protest.

It is anticipated that most ruling requests raising issues of the degree of complexity warranting headquarters attention will be submitted by professionals or experts in various aspects of importing or international trade who will be aware of the option of submitting their presentations to headquarters, rather than to region II, and will do so.

5. Appeals

Under T.D. 80–285, recipients of rulings from region II are given the right to appeal those rulings to headquarters. The regulations provide no time limit for the filing of that appeal. However, it is possible that between the time when a ruling has been issued and the time the appeal is filed the status of the transaction covered by the ruling may change. Those changes may affect the treatment of the appeal.

When the merchandise has been entered, the entry has been liquidated in accordance with a region II ruling, and the time for filing a protest has not elapsed, headquarters will only consider an appeal of that ruling as an adjunct to the protest procedures, as explained below. To provide a separate, direct appeal to the headquarters in those circumstances could mislead the appellant as to the finality of the liquidation and the necessity to file a timely protest in order to preserve the required standing to sue the Government.

While the status of the transaction to which the region II ruling relates remains prospective, the ruling may be appealed directly to headquarters. If the status of the transaction changes from prospective to ongoing after such an appeal if filed, the appellant should provide the port having jurisdiction over the transaction with a copy of both the region II ruling and the appeal, in order that liquidation can be suspended pending headquarters action on the appeal.

When the appeal is filed after the status of the transaction has changed from prospective to either ongoing (i.e., the merchandise covered by the ruling has arrived in the United States, but the entry has not been liquidated) or completed (the entry has been liquidated), the following procedures will be observed:

A. *Appeals before liquidation.*—When a recipient of a region II ruling appeals that ruling to headquarters prior to liquidation of the merchandise covered by that ruling, headquarters will unconditionally grant the requested review of that ruling. A copy of the region II ruling and the appeal should be filed by the appellant with the port having jurisdiction over the transaction in order that liquidation of the entry or entries involved can be suspended pending completion of headquarters' review of the ruling. Although such an appeal may not be properly the subject of a request for internal advice under section 177.11(b)(ii) of the Customs Regulations (19 CFR 177.11(b)(ii)), headquarters will accord such appeals the same priority status.

B. *Appeals after liquidation, but before liquidation is final.*—When the transaction to which the region II ruling relates has been liquidated in accordance with that ruling, but the liquidation has not become final, the proper avenue of appeal of that ruling to headquarters is through the protest procedures set forth in part 174 of the Customs Regulations (19 CFR part 174). When a port or district receives a protest of a region II ruling, it shall forward the protest and its recommendations to headquarters for review. Upon completion of the review by headquarters, which shall be coordinated with region II, the protest and other documents shall be returned to the port or district together with instructions for the disposition of the protest. The region II ruling will be modified or reversed, if appropriate.

C. *Appeals after liquidation is final.*—When the transaction to which the region II ruling relates has been liquidated in accordance with that ruling, and that liquidation has become final, an appeal of that ruling must be considered moot. The review of a region II ruling in these circumstances would serve no purpose in view of the finality of the liquidation. However, if the appellant continues to qualify for a ruling because there will be further prospective transactions, the appeal will be handled in the same manner as an original request for a ruling. In the event that the claims made are sustained and a modification or

reversal of the earlier ruling is obtained, the appellant will be advised that the new ruling will not be applicable to any liquidations which have become final, but will only apply to future importations.

6. Recordkeeping, Publication, and Monitoring

Region II will retain the files for all matters it handles. Complete records will be kept primarily to have the necessary records available for transfer to the U.S. Court of International Trade in the event a region II ruling (or the failure of region II to rule) becomes the subject of litigation. In this connection, procedures similar to those now in effect at headquarters will be observed with respect to maintaining reports or memorandums of all telephone contacts or conferences preceding the issuance of a ruling (to the extent that such contacts or conferences provide factual information on which the ultimate ruling is based). In some instances, the complete region II ruling file (including samples, exhibits, laboratory reports, and other pertinent materials) may be requested by headquarters in connection with a formal or informal review of the ruling. See section 5. A. and B., above.

Region II will assign to every inquiry it handles under part 177 of the Customs Regulations and these guidelines a six-digit control number beginning with 800000. Copies in triplicate of all region II rulings will be forwarded to the Director, Classification and Value Division, at headquarters, together with an Office of Regulations and Rulings Publication Determination form, within 30 days of issuance. Region II's recommendations as to publication will be set forth on the latter form and will be reviewed, together with the ruling, by headquarters. A keyword precedent report for each region II ruling will be completed by headquarters.

7. Effect on Other Procedures

The relationship between the region II ruling program and the headquarters appellate procedures, and the protest review and internal advice programs, is explained in sections 4 and 5, above. See sections 5 and 6 for further information concerning the relationship of the region II ruling program to the litigation process.

Nothing in these guidelines should be construed as curtailing in any way the normal accessibility of headquarters personnel for advice and counsel.

8. Expiration Date

This manual supplement will expire upon the incorporation of the guidelines contained herein in P&PM 2300.

[Published in the Federal Register, Apr. 30, 1981 (46 F.R. 24360)]

(T.D. 81-95)

Cotton Textile Products—Restriction on Entry

Restriction on entry of cotton textile products manufactured or produced in India

There is published below a directive of December 4, 1980, received by the Commissioner of Customs from the acting chairman, Committee for the Implementation of Textile Agreements, concerning restriction on entry of cotton textile products in category 318 manufactured or produced in India. This directive amends, but does not cancel, that committee's directive of December 21, 1979 (T.D. 80-58).

This directive was published in the Federal Register on December 10, 1980 (45 F.R. 81250_,) by the committee.

(QUO-2-1)

Date: April 12, 1981.

WILLIAM D. SLYNE
(For Richard R. Rosettie, Acting
Director, Duty Assessment Division).

U.S. DEPARTMENT OF COMMERCE,
INTERNATIONAL TRADE ADMINISTRATION,
Washington, D.C., December 4, 1980.

Committee for the Implementation of Textile Agreements

COMMISSIONER OF CUSTOMS,
Department of the Treasury,
Washington, D.C.

DEAR MR. COMMISSIONER: This directive further amends, but does not cancel, the directive issued to you on December 21, 1979, by the chairman, Committee for the Implementation of Textile Agreements, concerning imports into the United States of certain cotton, wool, and manmade fiber textile products, produced or manufactured in India.

Under the terms of the Arrangement Regarding International Trade in Textile done at Geneva on December 20, 1973, as extended on December 14, 1977; pursuant to the Bilateral Cotton, Wool and Man-Made Fiber Textile Agreement of December 30, 1977, as amended, between the Governments of the United States and India; and in accordance with the provisions of Executive Order 11651 of March 3, 1972, as amended by Executive Order 11951 of January 6, 1977, you are directed to prohibit, effective on December 10, 1980,

and for the 12-month period beginning on January 1, 1980, and extending through December 31, 1980, entry into the United States for consumption and withdrawal from warehouse for consumption of cotton textile products in category 318, produced or manufactured in India, in excess of 1 million square yards.[1]

Cotton textile products in category 318, which have been exported to the United States prior to January 1, 1980, shall not be subject to this directive.

Cotton textile products in category 318 which have been released from the custody of the U.S. Customs Service under the provisions of 19 U.S.C. 1448(b) or 1484(a)(1)(A) prior to the effective date of this directive shall not be denied entry under this directive.

A detailed description of the textile categories in terms of TSUSA numbers was published in the Federal Register on February 28, 1980 (45 F.R. 13172), as amended on April 23, 1980 (45 F.R. 27463), and August 12, 1980 (45 F.R. 53506).

In carrying out the above directions, entry into the United States for consumption shall be construed to include entry for consumption into the Commonwealth of Puerto Rico.

The actions taken with respect to the Government of India and with respect to imports of cotton textile products from India have been determined by the Committee for the Implementation of Textile Agreements to involve foreign affairs functions of the United States. Therefore, these directions to the Commissioner of Customs, which are necessary for the implementation of such actions, fall within the foreign affairs exception to the rulemaking provisions of 5 U.S.C. 553. This letter will be published in the Federal Register.

Sincerely,

ARTHUR GAREL,
Acting Chairman, Committee for the Implementation of Textile Agreements.

(T.D. 81-96)

Cotton Textile Products—Restriction on Entry

Restriction on entry of cotton textile products manufactured or produced in Taiwan

There is published below a directive of December 9, 1980, received by the Commissioner of Customs from the acting chairman, Commit-

[1] The level of restraint has not been adjusted to reflect any imports after Dec. 31, 1979. Imports during the January-October 1980 period have amounted to 880,843 square yards.

tee for the Implementation of Textile Agreements, concerning a reduction in charges of cotton textile products in certain categories manufactured or produced in Taiwan.

This directive was published in the Federal Register on December 10, 1980 (45 F.R. 81251), by the committee.

(QUO-2-1)

Dated: April 21, 1981.

WILLIAM D. SLYNE
(For Richard R. Rosettie, Acting Director, Duty Assessment Division).

U.S. DEPARTMENT OF COMMERCE,
INTERNATIONAL TRADE ADMINISTRATION,
Washington, D.C., December 9, 1980.

Committee for the Implementation of Textile Agreements

COMMISSIONER OF CUSTOMS,
Department of the Treasury,
Washington, D.C.

DEAR MR. COMMISSIONER: To facilitate implementation of the Bilateral Textile Agreement concerning cotton, wool, and manmade fiber textile products from Taiwan, it would be appreciated if you would deduct the following amounts from the charges recorded against the levels of restraint established for category 347/348 and its sublimits during the agreement year which began on January 1, 1980:

Category	*Amount of reduction in charges*
347/348	73,942 dozen
347	40,165 dozen
348	33,777 dozen

The actions taken with respect to the authorities in Taiwan and with respect to imports of cotton textile products from Taiwan have been determined by the Committee for the Implementation of Textile Agreements to involve foreign affairs functions of the United States. Therefore, these directions to the Commissioner of Customs, which are necessary for the implementation of such actions, fall within the foreign affairs exception to the rulemaking provisions of 5 U.S.C. 553. This letter will be published in the Federal Register.

Sincerely,

ARTHUR GAREL,
Acting Chairman, Committee for the Implementation of Textile Agreements.

(T.D. 81-97)

Cotton and Wool Textile Products—Restriction on Entry

Restriction on entry of cotton and wool textile products manufactured or produced in Macau

There are published below directives of November 18, and December 9, 1980, received by the Commissioner of Customs from the acting chairman, Committee for the Implementation of Textile Agreements, concerning restriction on entry of cotton and wool textile products in various categories manufactured or produced in Macau. This directive amends, but does not cancel, that committee's directive of January 30, 1980 (T.D. 80-73).

These directives were published in the Federal Register on November 21, 1980 (45 F.R. 77102), and December 12, 1980 (45 F.R. 81806), respectively, by the committee.

(QUO-2-1)

Dated: April 21, 1981.

WILLIAM D. SLYNE
(For Richard R. Rosettie, Acting
Director, Duty Assessment Division).

U.S. DEPARTMENT OF COMMERCE,
INTERNATIONAL TRADE ADMINISTRATION,
Washington, D.C., November 18, 1980.

Committee for the Implementation of Textile Agreements

COMMISSIONER OF CUSTOMS,
Department of the Treasury,
Washington, D.C.

DEAR MR. COMMISSIONER: On January 25, 1980, the chairman, Committee for the Implementation of Textile Agreements, directed you to prohibit entry during the 12-month period beginning on January 1, 1980, and extending through December 31, 1980, of cotton, wool, and manmade fiber textile products, produced or manufactured in Macau, in excess of designated levels of restraint. The chairman further advised you that the levels of restraint are subject to adjustment.[1]

[1] The term "adjustment" refers to those provisions of the Bilateral Cotton, Wool and Man-Made Fiber Textile Agreement of Nov. 29 and Dec. 18, 1979, between the Governments of the United States and Macau, which provide, in part, that: (1) Within the aggregate and group limits, specific levels of restraint may be exceeded by designated percentages; (2) these levels may also be increased for carryover and carryforward up to 11 percent of the applicable category limits; and (3) administrative arrangements or adjustments may be made to resolve minor problems arising in the implementation of the agreement.

Under the terms of the Arrangement Regarding International Trade in Textiles done at Geneva on December 20, 1973, as extended on December 15, 1977; pursuant to the Bilateral Cotton, Wool and Man-Made Fiber Textile Agreement of November 29, and December 18, 1979, between the Governments of the United States and Macau; and in accordance with the provisions of Executive Order 11651 of March 3, 1972, as amended by Executive Order 11951 of January 6, 1977, you are directed to prohibit, effective on November 24, 1980, and for the 12-month period beginning on January 1, 1980, and extending through December 31, 1980, entry into the United States for consumption and withdrawal from warehouse for consumption of cotton and wool textile products in categories 338, 339, 340, 347/348, and 445/446, produced or manufactured in Macau, in excess of the following levels of restraint:

Category	*Adjusted 12-month level of restraint* [1]
338	127,035 dozen
339	509,186 dozen
340	121,711 dozen
347/348	289,595 dozen
445/446	72,238 dozen

The actions taken with respect to the Government of Macau and with respect to imports of cotton and wool textile products from Macau have been determined by the Committee for the Implementation of Textile Agreements to involve foreign affairs functions of the United States. Therefore, these directions to the Commissioner of Customs, which are necessary for the implementation of such actions, fall within the foreign affairs exception to the rulemaking provisions of 5 U.S.C. 553. This letter will be published in the Federal Register.

Sincerely,

ARTHUR GAREL,
Acting Chairman, Committee for the Implementation of Textile Agreements.

U.S. DEPARTMENT OF COMMERCE,
INTERNATIONAL TRADE ADMINISTRATION,
Washington, D.C., December 9, 1980.

Committee for the Implementation of Textile Agreements

COMMISSIONER OF CUSTOMS,
Department of the Treasury,
Washington, D.C.

DEAR MR. COMMISSIONER: On January 25, 1980, the chairman, Committee for the Implementation of Textile Agreements, directed

[1] The levels of restraint have not been adjusted to reflect any imports after Dec. 31, 1979.

you to prohibit entry during the 12-month period beginning on January 1, 1980, and extending through December 31, 1980, of cotton, wool, and manmade fiber textile products, produced or manufacture in Macau, in excess of designated levels of restraint. The chairman further advised you that the levels of restraint are subject to adjustment.[1]

Under the terms of the Arrangement Regarding International Trade in Textiles done at Geneva on December 20, 1973, as extended on December 15, 1977; pursuant to the Bilateral Cotton, Wool and Man-Made Fiber Textile Agreement of November 29, and December 18, 1979, between the Governments of the United States and Macau; and in accordance with the provisions of Executive Order 11651 of March 3, 1972 as amended by Executive Order 11911 of January 6, 1977, you are directed to prohibit effective on December 15, 1980, and for the 12-month period beginning on January 1, 1980, and extending through December 31, 1980, entry into the United States for consumption and withdrawal from warehouse for consumption of cotton and wool textile products in categories 333/334/335, 339, 340, 347/348, and 445/446, produced or manufactured in Macau, in excess of the following levels of restraint:

Category	*Adjusted 12-month level of restraint*[2]
333/334/335	94, 180 dozen
339	534, 023 dozen
340	124, 300 dozen
347/348	296, 060 dozen
445/446	75, 385 dozen

The action taken with respect to the Government of Macau and with respect to imports of cotton and wool textile products from Macau have been determined by the Committee for the Implementation of Textile Agreements to involve foreign affairs functions of the United States. Therefore, these directions to the Commissioner of Customs, which are necessary for the implementation of such actions, fall within the foreign affairs exception to the rule, making provisions of 5 U.S.C. 553. This letter will be published in the Federal Register.

Sincerely,

ARTHUR GAREL,
Acting Chairman, Committee for the Implementation of Textile Agreements.

---

[1] The term "adjustment" refers to those provisions of the Bilateral Cotton, Wool and Man-Made Fiber Textile Agreement of Nov. 29 and Dec. 18, 1979, between the Governments of the United States and Macau, which provide, in part, that: (1) Within the aggregate and group limits, specific levels of restraint may be exceeded by designated percentages; (2) these levels may also be increased for carryover and carryforward up to 11 percent of the applicable category limits; and (3) administrative arrangements or adjustments may be made to resolve problems arising in the implementation of the agreement.

[2] The levels of restraint have not been adjusted to reflect any imports after Dec. 31, 1979.

346-390 O - 81 - 3

(T.D. 81-98)

Cotton and Manmade Fiber Textile Products—Restriction on Entry

Restriction on entry of cotton and manmade fiber textile products manufactured or produced in Thailand

There are published below directives of October 3, and December 11, 1980, received by the Commissioner of Customs from the chairman, Committee for the Implementation of Textile Agreements, concerning restriction on entry of cotton and manmade fiber textile products in certain categories manufactured or produced in Thailand. These directives amend, but do not cancel, that committee's directive of December 20, 1979 (T.D. 80-59).

These directives were published in the Federal Register on October 8, 1980 (45 F.R. 66836), and December 16, 1980 (45 F.R. 82689), respectively, by the committee.

(QUO-2-1)

Dated: April 21, 1981.

WILLIAM D. SLYNE
(For Richard R. Rosettie, Acting
Director, Duty Assessment Division).

U.S. DEPARTMENT OF COMMERCE,
INTERNATIONAL TRADE ADMINISTRATION,
Washington, D.C., October 3, 1980.

Committee for the Implementation of Textile Agreements

COMMISSIONER OF CUSTOMS,
Department of the Treasury,
Washington, D.C.

DEAR MR. COMMISSIONER: On December 20, 1979, the chairman, Committee for the Implementation of Textile Agreements, directed you to prohibit entry for consumption, or withdrawal from warehouse for consumption, during the 12-month period beginning on January 1, 1980, and extending through December 31, 1980, of cotton and manmade fiber textile products in certain specified categories, produced or manufactured in Thailand, in excess of designated levels of restraint. The chairman further advised you that the levels of restraint are subject to adjustment.[1]

[1] The term "adjustment" refers to those provisions of the Bilateral Cotton, Wool and Man-Made Fiber Textile Agreement of Oct. 4, 1978, as amended, between the Governments of the United States and Thailand, which provide, in part, that: (1) Specific levels of restraint may be increased for carryover and carryforward up to 11 percent of the applicable category limit with the amount of carryforward used being deducted from the succeeding year's level; and (2) administrative arrangements or adjustments may be made to resolve minor problems arising in the implementation of the agreement.

Under the terms of the Arrangement Regarding International Trade in Textiles done at Geneva on December 20, 1973, as extended on December 15, 1977; pursuant to the Bilateral Cotton, Wool and Man-Made Fiber Textile Agreement of October 4, 1978, as amended, between the Governments of the United States and Thailand; and in accordance with the provisions of Executive Order 11651 of March 3, 1972, as amended by Executive Order 11951 of January 6, 1977, you are directed, effective on October 6, 1980, and for the 12-month period beginning on January 1, 1980, and extending through December 31, 1980, to amend the 12-month levels of restraint established for cotton and man-made fiber textile products in categories 334/335, 340, 341, and 641 to the following:

Category	*Adjusted 12-month level of restraint* [2]
334/335	40,674 dozen
340	99,928 dozen
341	101,668 dozen
641	139,419 dozen

The actions taken with respect to the Government of Thailand and with respect to imports of cotton and manmade fiber textile products from Thailand have been determined by the Committee for the Implementation of Textile Agreements to involve foreign affairs functions of the United States. Therefore, these directions to the Commissioner of Customs, which are necessary for the implementation of such actions, fall within the foreign affairs exception to the rulemaking provisions of 5 U.S.C. 553. This letter will be published in the Federal Register.

Sincerely,

PAUL T. O'DAY,
Chairman, Committee for the
Implementation of Textile Agreements.

U.S. DEPARTMENT OF COMMERCE,
INTERNATIONAL TRADE ADMINISTRATION,
Washington, D.C., December 11, 1980.

Committee for the Implementation of Textile Agreements

COMMISSIONER OF CUSTOMS,
Department of the Treasury,
Washington, D.C.

DEAR MR. COMMISSIONER: This directive futher amends, but does not cancel, the directive of December 20, 1979, from the chairman

[2] The levels of restraint have not been adjusted to reflect any imports after Dec. 31, 1979.

of the Committee for the Implementation of Textile Agreements which directed you to prohibit entry during the 12-month period which began on January 1, 1980, and extends through December 31, 1980, of cotton and manmade fiber textile products in certain specified categories, produced or manufactured in Thailand, in excess of designated levels of restraint.

Under the terms of the Arrangement Regarding International Trade in Textiles done at Geneva on December 20, 1973, as extended on December 15, 1977; pursuant to the Bilateral Cotton, Wool and Man-Made Fiber Textile Agreement of October 4, 1978, as amended, between the Governments of the United States and Thailand; and in accordance with the provisions of Executive Order 11651 of March 3, 1972, as amended by Executive Order 11951 of January 6, 1977, you are directed to prohibit, effective on December 17, 1980, and for the 12-month period beginning on January 1, 1980, and extending through December 31, 1980, entry into the United States for consumption and withdrawal from warehouse for consumption of manmade fiber textile products in category 604, produced or manufactured in Thailand, in excess of 536,585 pounds.

The actions taken with respect to the Government of Thailand and with respect to imports of manmade fiber textile products from Thailand have been determined by the Committee for the Implementation of Textile Agreements to involve foreign affairs functions of the United States. Therefore, these directions to the Commissioner of Customs, which are necessary for the implementation of such actions, fall within the foreign affairs exception to the rulemaking provisions of 5 U.S.C. 553. This letter will be published in the Federal Register.

Sincerely,

ARTHUR GAREL,
Acting Chairman, Committee for the Implementation of Textile Agreements.

(T.D. 81-99)

Cotton and Wool Textile Products—Restriction on Entry

Restriction on entry of cotton and wool textile products manufactured or produced in Macau

There are published below directives of September 12 and September 24, 1980, received by the Commissioner of Customs from the chairman, Committee for the Implementation of Textile Agree-

ments, concerning restriction on entry of cotton and wool textile products in certain categories manufactured or produced in Macau. These directives amend, but do not cancel, that committee's directive of January 25, 1980 (T.D. 80–73).

The directives were published in the Federal Register on September 18 and September 29, 1980 (45 F.R. 62175 and 45 F.R. 64228), by the committee.

(QUO–2–1)

Dated: April 21, 1981.

WILLIAM D. SLYNE
(For Richard R. Rosettie, Acting
Director, Duty Assessment Division).

U.S. DEPARTMENT OF COMMERCE,
INTERNATIONAL TRADE ADMINISTRATION,
Washington, D.C., September 12, 1960.

Committee for the Implementation of Textile Agreements

COMMISSIONER OF CUSTOMS,
Department of the Treasury,
Washington, D.C.

DEAR MR. COMMISSIONER: On January 25, 1980, the chairman Committee for the Implementation of Textile Agreements, directed you to prohibit entry during the 12-month period beginning on January 1, 1980, and extending through December 31, 1980, of cotton, wool, and manmade fiber textile products, produced or manufactured in Macau, in excess of designated levels of restraint. The chairman further advised you that the levels of restraint are subject to adjustment.[1]

Under the terms of the Arrangement Regarding International Trade in Textiles done at Geneva on December 20, 1973, as extended on December 15, 1977; pursuant to the Bilateral Cotton, Wool and Man-Made Fiber Textile Agreement of November 29 and December 18, 1979, as amended, between the Governments of the United States and Macau; and in accordance with the provisions of Executive Order 11651 of March 3, 1972, as amended, by Executive Order

[1] The term "adjusted" refers to those provisions of the Bilateral Cotton, Wool and Man-Made Fiber Textile Agreement of Nov. 29 and Dec. 18, 1979, between the Governments of the United States and Macau, which provide, in part, that: (1) Within the aggregate and group limits, specific levels of restraint may be exceeded by designated percentages; (2) these levels may also be increased for carryover and carryforward up to 11 percent of the applicable category limits; and (3) administrative arrangements or adjustments may be made to resolve minor problems arising in the implementation of the agreement.

11951 of January 6, 1977, you are directed to prohibit, effective on September 18, 1980, and for the 12-month period beginning on January 1, 1980, and extending through December 31, 1980, entry into the United States for consumption and withdrawal from warehouse for consumption of cotton textile products in category 339 and 347/348, produced or manufactured in Macau, in excess of the following adjusted levels of restraint:

Category	*Adjusted 12-month level of restraint* [2]
339	470,550 dozen
347/348	280,340 dozen

The actions taken with respect to the Government of Macau and with respect to imports of cotton textile products from Macau have been determined by the Committee for the Implementation of Textile Agreements to involve foreign affairs functions of the United States. Therefore, these directions to the Commissioner of Customs, which are necessary for the implementation of such actions, fall within the foreign affairs exception to the rulemaking provisions of 5 U.S.C. 553. This letter will be published in the Federal Register.

Sincerely,

PAUL T. O'DAY,
Chairman, Committee for the
Implementation of Textile Agreements.

U.S. DEPARTMENT OF COMMERCE,
INTERNATIONAL TRADE ADMINISTRATION,
Washington, D.C., September 24, 1980.

Committee for the Implementation of Textile Agreements

COMMISSIONER OF CUSTOMS,
Department of the Treasury, Washington, D.C.

DEAR MR. COMMISSIONER: On January 25, 1980, the chairman, Committee for the Implementation of Textile Agreements, directed you to prohibit entry during the 12-month period beginning on January 1, 1980, and extending through December 31, 1980, of cotton, wool, and manmade fiber textile products, produced or manufactured in Macau, in excess of designated levels of restraint. The chairman further advised you that the levels of restraint are subject to adjustment.[1]

[2] The levels of restraint have not been adjusted to reflect any imports after Dec. 31, 1979.

[1] The term "adjustment" refers to those provisions of the Bilateral Cotton, Wool and Man-Made Fiber Textile Agreement of Nov. 29 and Dec. 18, 1979, between the Governments of the United States and Macau, which provide, in part, that: (1) Within the aggregate and group limits, specific levels of restraint may be exceeded by designated percentages; (2) these levels may also be increased for carryover and carryforward up to 11 percent of the applicable category limits; and (3) administrative arrangements or adjustments may be made to resolve minor problems arising in the implementation of the agreement.

Under the terms of the Arrangement Regarding International Trade in Textiles at Geneva on December 20, 1973, as extended on December 15, 1977; pursuant to the Bilateral Cotton, Wool, and Man-Made Fiber Textile Agreement of November 29, and December 18, 1979, between the Governments of the United States and Macau; and in accordance with the provisions of Executive Order 11651 of March 3, 1972, as amended by Executive Order 11951 of January 6, 1977, you are directed to prohibit, effective on September 29, 1980, and for the 12-month period beginning on January 1, 1980, and extending through December 31, 1980, entry into the United States for consumption and withdrawal from warehouse for consumption of cotton and wool textile products in categories 333/334/335, 338, 339, 340, 341, 347/348, and 445/446, produced or manufactured in Macau, in excess of the following level of restraint:

Category	*Adjusted 12-month level of restraint*[1]
333/334/335	82,119 dozen
338	122,787 dozen
339	502,219 dozen
340	117,700 dozen
341	75,914 dozen
347/348	286,354 dozen
445/446	71,310 dozen

The actions taken with respect to the Government of Macau and with respect to imports of cotton and wool textiles products from Macau have been determined by the Committee for the Implementation of Textile Agreements to involve foreign affairs functions of the United States. Therefore, these directions to the Commissioner of Customs, which are necessary for the implementation of such actions, fall within the foreign affairs exception to the rulemaking provisions of 5 U.S.C. 553. This letter will be published in the Federal Register.

Sincerely,

ARTHUR GAREL,
Acting Chairman, Committee for the Implementation of Textile Agreements.

(T.D. 81-100)

Manmade Fiber Textile Products—Restriction on Entry

Restriction on entry of manmade fiber textile products manufactured or produced in Costa Rica

There is published below a directive of December 18, 1980, received by the Commissioner of Customs from the chairman, Committee for

[1] The levels of restraint have not been adjusted to reflect any imports after Dec. 31, 1979.

the Implementation of Textile Agreements, concerning restriction on entry of manmade fiber textile products in category 649 manufactured or produced in Costa Rica. This directive amends, but does not cancel, that committee's directive of November 21, 1980 (T.D. 81–25).

This directive was published in the Federal Register on December 24, 1980 (45 F.R. 85139), by the committee.

(QUO–2–1)

Dated: April 21, 1981.

WILLIAM D. SLYNE
(For Richard R. Rosettie, Acting
Director, Duty Assessment Division).

U.S. DEPARTMENT OF COMMERCE,
INTERNATIONAL TRADE ADMINISTRATION,
Washington, D.C., December 18, 1980.

Committee for the Implementation of Textile Agreements

COMMISSIONER OF CUSTOMS,
Department of the Treasury,
Washington, D.C.

DEAR MR. COMMISSIONER: On November 21, 1980, the chairman, Committee for the Implementation of Textile Agreements, directed you to prohibit entry during the 12-month period beginning on January 1, 1980, and extending through December 31, 1980, of manmade fiber textile products, produced or manufactured in Costa Rica, in excess of a designated level of restraint. The chairman further advised you that the level of restraint is subject to adjustment.[1]

Under the terms of the Arrangement Regarding International Trade in Textiles done at Geneva on December 20, 1973, as extended on December 15, 1977; pursuant to the Bilateral Cotton, Wool and Man-Made Fiber Textile Agreement of September 22, 1980, between the Governments of the United States and Costa Rica; and in accordance with the provisions of Executive Order 11651 of March 3, 1972, as amended by Executive Order 11951 of January 6, 1977, you are di-

---

[1] The term "adjustment" refers to those provisions of the Bilateral Cotton, Wool and Man-Made Fiber Textile Agreement of Sept. 22, 1980, between the Governments of the United States and Costa Rica, which provide, in part, that: (1) The specific limit may be increased for carryover and carryforward up to 11 percent of the applicable category limit; and (2) administrative arrangements or adjustments may be made to resolve problems arising in the implementation of the agreement.

rected to prohibit effective on December 18, 1980, and for the 12-month period beginning on January 1, 1980, and extending through December 31, 1980, entry into the United States for consumption and withdrawal from warehouse for consumption of manmade fiber textile products in category 649, produced or manufactured in Costa Rica, in excess of 1,685,250 dozen.

The action taken with respect to the Government of Costa Rica and with respect to imports of manmade fiber textile products from Costa Rica has been determined by the Committee for the Implementation of Textile Agreements to involve foreign affairs functions of the United States. Therefore, these directions to the Commissioner of Customs, which are necessary for the implementation of such actions, fall within the foreign affairs exception to the rulemaking provisions of 5 U.S.C. 553. This letter will be published in the Federal Register.

Sincerely,

PAUL T. O'DAY,
Chairman, Committee for the Implementation of Textile Agreements.

Cotton, Wool, and Manmade Fiber Textile Products—Restriction on Entry

Restriction on entry of cotton, wool, and manmade fiber textile products manufactured or produced in Korea

There are published below directives of October 22 and 29, 1980 received by the Commissioner of Customs from the chairman, Committee for the Implementation of Textile Agreements, concerning restriction on entry of cotton, wool, and manmade fiber textile products in certain categories manufactured or produced in Korea. These directives amend but do not cancel, that committee's directive of December 20, 1979 (T.D. 80-65).

These directives were published in the Federal Register on October 29, 1980 (45 F.R. 71640), and November 3, 1980 (45 F.R. 72730).

(QUO-2-1)

Dated: April 21, 1981.

WILLIAM D. SLYNE
(For Richard R. Rosettie, Acting Director, Duty Assessment Division).

U.S. DEPARTMENT OF COMMERCE,
INTERNATIONAL TRADE ADMINISTRATION,
Washington, D.C., October 22, 1980.

Committee for the Implementation of Textile Agreements

COMMISSIONER OF CUSTOMS,
Department of the Treasury,
Washington, D.C.

DEAR MR. COMMISSIONER: This directive further amends, but does not cancel, the directive issued to you on December 20, 1979, by the chairman, Committee for the Implementation of Textile Agreements, concerning imports into the United States of certain cotton, wool, and manmade fiber textile products, produced or manufactured in the Republic of Korea.

Under the terms of the Arrangement Regarding International Trade in Textiles done at Geneva on December 20, 1972, as extended on December 15, 1977; pursuant to the Bilateral Cotton, Wool and Man-Made Fiber Textile Agreement of December 23, 1977, as amended, between the Governments of the United States and the Republic of Korea; and in accordance with the provisions of Executive Order 11651 of March 3, 1972, as amended by Executive Order 11951 of January 6, 1977, you are directed, effective on November 3, 1980, and for the 12-month period beginning on January 1, 1980, and extending through December 31, 1980, to prohibit entry into the United States for consumption, and withdrawal from warehouse for consumption, of cotton and manmade fiber textile products in categories 300, 301, 310–320, 330, 360–363, 369, 600–605, 610–614, 625–627, 630, 665, 666, and 669, as a group, produced or manufactured in the Republic of Korea, in excess of the following adjusted level of restraint:[1]

Category	*Adjusted 12-month level of restraint*[2]
300, 301, 310–320, 330, 360–363, 369, 600–605, 610–614, 625–627, 630, 665, 666, and 669	166,958,768 square yards equivalent

Textile products in the foregoing group of categories (300, 301, 310–318, 320, 330, 360–363, 369, 600–603, 605, 610–614, 625–627,

[1] The term "adjusted level" refers to those provisions of the Bilateral Cotton, Wool and Man-Made Fiber Textile Agreement of Dec. 23, 1977, as amended, between the Governments of the United States and the Republic of Korea which provide, in part, that: (1) Within the aggregate and applicable group limits, specific levels of restraint may be exceeded by designated percentages; (2) these same levels may be increased for carryover and carryforward up to 11 percent of the applicable category limit; (3) administrative arrangements or adjustments may be made to resolve minor problems arising in the implementation of the agreement.

[2] The level of restraint has not been adjusted to reflect any imports after Dec. 31, 1979.

630, 665, 666, and 669) which have been exported to the United States prior to January 1, 1980, shall not be subject to this directive.

Textile products in the foregoing group of categories which have been released from the custody of the U.S. Customs Service under the provisions of 19 U.S.C. 1448(b) or 1484(a)(1)(A) prior to the effective date of this directive shall not be denied entry under this directive.

A detailed description of the textile categories in terms of TSUSA numbers and factors for converting category units into equivalent square yards was published in the Federal Register on February 28, 1980 (45 F.R. 13172), as amended on April 23, 1980 (45 F.R. 27463), and August 12, 1980 (45 F.R. 53506).

In carrying out the above directions, entry into the United States for consumption shall be construed by the Commissioner of Customs to include entry for consumption into the Commonwealth of Puerto Rico.

The actions taken with respect to the Government of the Republic of Korea and with respect to imports of cotton, wool, and manmade fiber textile products from the Republic of Korea have been determined by the Committee for the Implementation of Textile Agreements to involve foreign affairs functions of the United States. Therefore, these directions to the Commissioner of Customs, which are necessary for the implementation of such actions, fall within the foreign affairs exception to the rulemaking provisions of 5 U.S.C. 553. This letter will be published in the Federal Register.

Sincerely,

RONALD I. LEVIN,
Acting Chairman, Committee for the Implementation of Textile Agreements.

U.S. DEPARTMENT OF COMMERCE,
INTERNATIONAL TRADE ADMINISTRATION,
Washington, D.C., October 29, 1980.

Committee for the Implementation of Textile Agreements

COMMISSIONER OF CUSTOMS,
Department of the Treasury,
Washington, D.C.

DEAR MR. COMMISSIONER: On December 20, 1979, the chairman, Committee for the Implementation of Textile Agreements, directed you to prohibit entry for consumption, or withdrawal from warehouse for consumption, during the 12-month period beginning on January 1, 1980, and extending through December 31, 1980, of cotton, wool, and manmade fiber textile products in certain specified categories, pro-

duced or manufactured in the Republic of Korea, in excess of designated levels of restraint. The chairman further advised you that the levels of restraint are subject to adjustment.[1]

Under the terms of the Arrangement Regarding International Trade in Textiles done at Geneva on December 20, 1973, as extended on December 15, 1977, pursuant to the Bilateral Cotton, Wool and Man-Made Fiber Textile Agreement of December 23, 1977, as amended, between the Governments of the United States and the Republic of Korea; and in accordance with the provisions of Executive Order 11651 of March 3, 1972, as amended by Executive Order 11951 of January 6, 1977, you are directed, effective on November 4, 1980, to amend the 12-month level of restraint established for wool textile products in category 445/446 to the following:

Category	*Amended 12-month level of restraint*[2]
445/446	57,901 dozen

The action taken with respect to the Government of the Republic of Korea and with respect to imports of wool textile products from the Republic of Korea has been determined by the Committee for the Implementation of Textile Agreements to involve foreign affairs functions of the United States. Therefore, these directions to the Commissioner of Customs, which are necessary to the implementation of such actions, fall within the foreign affairs exception to the rule-making provisions of 5 U.S.C. 553. This letter will be published in the Federal Register.

Sincerely,

PAUL T. O'DAY,
Chairman, Committee for the Implementation of Textile Agreements.

(T.D. 81-102)

Feather-filled Jackets, Coats, and Vests—Restriction on Entry

Restriction on entry of textile feather-filled jackets, coats, and vests manufactured in Republic of Korea

There is published below a directive of October 24, 1980, received by the Commissioner of Customs from the acting chairman, Committee

---

[1] The term "adjustment" refers to those provisions of the Bilateral Cotton, Wool and Man-Made Fiber Textile Agreement of Dec. 23, 1977, as amended, between the Governments of the United States and the Republic of Korea, which provide, in part, that (1) within the aggregate and applicable group limits, specific levels of restraint may be exceeded by designated percentages; (2) these same levels may be increased for carryover and carryforward up to 11 percent of the applicable category limit; (3) administrative arrangements or adjustments may be made to resolve minor problems arising in the implementation of the agreement.

[2] The level of restraint has not been adjusted to reflect any imports after Dec. 31, 1979.

for the Implementation of Textile Agreements, concerning restriction on entry of feather-filled jackets, coats, and vests in TSUSA Nos. 748.4042, 748.4044, 748.4054, and 748.4062 manufactured or produced in Republic of Korea. This directive amends, but does not cancel, that committee's directive of December 20, 1979 (T.D. 80–65).

This directive was published in the Federal Register on November 3, 1980 (45 F.R. 72729), by the committee.

(QUO–2–1)

Dated: April 21, 1981.

WILLIAM D. SLYNE
(For Richard R. Rosettie, Acting
Director, Duty Assessment Division).

U.S. DEPARTMENT OF COMMERCE,
INTERNATIONAL TRADE ADMINISTRATION,
Washington, D.C., October 24, 1980.

Committee for the Implementation of Textile Agreements

COMMISSIONER OF CUSTOMS,
Department of the Treasury,
Washington, D.C.

DEAR MR. COMMISSIONER: This directive further amends, but does not cancel, the directive of December 20, 1979, from the chairman, Committee for the Implementation of Textile Agreements, concerning imports into the United States of certain cotton, wool, and manmade fiber textile products, produced or manufactured in the Republic of Korea.

Under the terms of the Arrangement Regarding International Trade in Textiles done at Geneva on December 20, 1973, as extended on December 15, 1977; and in accordance with the provisions of Executive Order 11651 of March 3, 1972, as amended by Executive Order 11951 of January 6, 1977, you are directed to prohibit, effective on November 7, 1980, and for the 12-month period beginning on January 1, 1980, and extending through December 31, 1980, entry into the United States for consumption and withdrawal from warehouse for consumption of feather-filled jackets, coats, and vests in TSUSA Nos. 748.4042, 748.4044, 748.4054, and 748.4062, produced or manufactured in the Republic of Korea in excess of 195,196 dozen.[1] Merchandise in the foregoing TSUSA numbers which has been ex-

[1] The level of restraint has not been adjusted to reflect any imports after Dec. 31, 1979. Imports in the designated TSUSA numbers have amounted to 93,574 dozens during the January–August period of 1980.

ported before January 1, 1981, is not subject to the export visa requirement.

The foregoing feather-filled textile products which have been exported to the United States prior to January 1, 1980, shall not be subject to this directive.

Further, such products which have been released from the custody of the U.S. Customs Service under the provisions of 19 U.S.C. 1448(b) or 1484(a)(1)(A) prior to the effective date of this directive shall not be denied entry under this directive.

In carrying out the above directions, the Commissioner of Customs should construe entry into the United States for consumption to include entry for consumption into the Commonwealth of Puerto Rico.

The actions taken with respect to the Government of the Republic of Korea and with respect to feather-filled textile products in TSUSA Nos. 748.4042, 748.4044, 748.4054, and 748.4062 from the Republic of Korea have been determined by the Committee for the Implementation of Textile Agreements to involve foreign affairs functions of the United States. Therefore, these directions to the Commissioner of Customs, which are necessary for the implementation of such actions, fall within the foreign affairs exception to the rulemaking provisions of 5 U.S.C. 553. This letter will be published in the Federal Register.

Sincerely,

EDWARD GOTTFRIED,
Acting Chairman, Committee for the Implementation of Textile Agreements.

(T.D. 81-103)

Cotton, Wool, and Manmade Fiber Textile Products—Restriction on Entry

Restriction on entry of cotton, wool, and manmade fiber textile products manufactured or produced in Taiwan

There are published below directives of September 23 and 24, November 21, and December 11, 1980, received by the Commissioner of Customs from the acting chairman, Committee for the Implementation of Textile Agreements, concerning restriction on entry of cotton, wool, and manmade fiber textile products in certain categories manufactured or produced in Taiwan. These directives amend but do not cancel, that committee's directive of December 21, 1979 (T.D. 80-66).

These directives were published in the Federal Register on September 26, 1980 (45 F.R. 63897), September 29, 1980 (45 F.R. 64229), November 28, 1980 (45 F.R. 79136), and December 16, 1980 (45 F.R. 82690), respectively, by the committee.

(QUO-2-1)

Dated: April 21, 1981.

WILLIAM D. SLYNE
(For Richard R. Rosettie, Acting
Director, Duty Assessment Division).

U.S. DEPARTMENT OF COMMERCE,
INTERNATIONAL TRADE ADMINISTRATION,
Washington, D.C., September 23, 1980.

Committee for the Implementation of Textile Agreements

COMMISSIONER OF CUSTOMS,
Department of the Treasury,
Washington, D.C.

DEAR MR. COMMISSIONER: This directive further amends, but does not cancel, the directive of December 21, 1979, from the chairman, Committee for the Implementation of Textile Agreements, concerning imports into the United States of certain cotton, wool, and manmade fiber textile products, produced or manufactured in Taiwan.

Under the terms of the Arrangement Regarding International Trade in Textiles done at Geneva on December 20, 1973, as extended on December 15, 1977; pursuant to the Bilateral Cotton, Wool and Man-Made Fiber Textile Agreement of June 8, 1978, as amended, concerning cotton, wool, and manmade fiber textile products from Taiwan; and in accordance with the provisions of Executive Order 11651 of March 3, 1972, as amended by Executive Order 11951 of January 6, 1977, you are directed, effective on September 26, 1980, and for the 12-month period which began on January 1, 1980, and extends through December 31, 1980, to prohibit entry for consumption or withdrawal from warehouse for consumption of wool textile products in category 445/446, produced or manufactured in Taiwan in excess of the following amended level of restraint:

Category	*Amended 12-month level of restraint* [1]
445/446	128,747 dozen

The actions taken with respect to the authorities in Taiwan and with respect to wool textile products in category 445/446 from Taiwan

[1] The level of restraint has not been adjusted to reflect any imports after Dec. 31, 1979.

have been determined by the Committee for the Implementation of Textile Agreements to involve foreign affairs functions of the United States. Therefore, these directions to the Commissioner of Customs, which are necessary for the implementation of such actions, fall within the foreign affairs exception to the rulemaking provisions of 5 U.S.C. 553. This letter will be published in the Federal Register.

Sincerely,

ARTHUR GAREL,
Acting Chairman, Committee for the Implementation of Textile Agreements.

U.S. DEPARTMENT OF COMMERCE,
INTERNATIONAL TRADE ADMINISTRATION,
Washington, D.C., September 24, 1980.

Committee for the Implementation of Textile Agreements

COMMISSIONER OF CUSTOMS,
Department of the Treasury,
Washington, D.C.

DEAR MR. COMMISSIONER: On December 21, 1979, the chairman of the Committee for the Implementation of Textile Agreements directed you to prohibit entry for consumption, or withdrawal from warehouse for consumption, during the 12-month period which began on January 1, 1980, and extends through December 31, 1980, of cotton, wool, and manmade fiber textile products, produced or manufactured in Taiwan, in certain specified categories, in excess of designated levels of restraint. The chairman further advised you that the levels of restraint are subject to adjustment.[1]

Under the terms of the Arrangement Regarding International Trade in Textiles done at Geneva on December 20, 1973, as extended on December 15, 1977; pursuant to the Bilateral Cotton, Wool and Man-Made Fiber Textile Agreement of June 8, 1978, as amended, concerning cotton, wool, and manmade fiber textile products from Taiwan; and in accordance with the provisions of Executive Order 11651 of March 3, 1972, as amended by Executive Order 11951 of January 6, 1977, you are directed, effective on September 26, 1980, and for the 12-month period which began on January 1, 1980, and extends through December

[1] The term "adjustment" refers to those provisions of the Bilateral Cotton, Wool and Man-Made Fiber Textile Agreement of June 8, 1978, as amended, concerning cotton, wool, and manmade fiber textile products from Taiwan, which provide, in part; that: (1) Within the aggregate and applicable group limits, specific levels of restraint may be exceeded by designated percentages; (2) these same levels may be increased for carryover and carryforward up to 11 percent of the applicable category limit; (3) administrative arrangements or adjustments may be made to resolve minor problems arising in the implementation of the agreement.

31, 1980, to prohibit entry for consumption, or withdrawal from warehouse for consumption, of cotton textile products in category 347/348, produced or manufactured in Taiwan, in excess of the following amended level of restraint:

Category	*Amended 12-month level of restraint* [1]
347/348	882,414 dozen of which not more than 433,382 dozen shall be in category 347 and not more than 657,001 dozen shall be in category 348

The actions taken with respect to the authorities in Taiwan and with respect to cotton textile products in category 347/348 from Taiwan have been determined by the Committee for the Implementation of Textile Agreements to involve foreign affairs functions of the United States. Therefore, these directions to the Commissioner of Customs, which are necessary for the implementation of such actions, fall within the foreign affairs exception to the rulemaking provisions of 5 U.S.C. 553. This letter will be published in the Federal Register.

Sincerely,

ARTHUR GAREL,
Acting Chairman, Committee for the Implementation of Textile Agreements.

U.S. DEPARTMENT OF COMMERCE,
INTERNATIONAL TRADE ADMINISTRATION,
Washington, D.C., November 21, 1980.

Committee for the Implementation of Textile Agreements

COMMISSIONER OF CUSTOMS,
Department of the Treasury,
Washington, D.C.

DEAR MR. COMMISSIONER: This directive further amends, but does not cancel, the directive of December 21, 1979, which directed you to prohibit entry of cotton, wool, and manmade fiber textile products in certain specified categories, produced or manufactured in Taiwan and exported during the 12-month period which began on January 1, 1980.

Under the terms of the Arrangement Regarding International Trade in Textiles done at Geneva on December 20, 1973, as extended on December 15, 1977; pursuant to the Bilateral Cotton, Wool and

[1] The levels of restraint have not been adjusted to reflect any imports after Dec. 31, 1979.

Man-Made Fiber Textile Agreement of June 8, 1978, as amended, concerning cotton, wool, and manmade fiber textile products exported from Taiwan; and in accordance with the provisions of Executive Order 11651 of March 3, 1972, as amended by Executive Order 11951 of January 6, 1977, you are directed to amend, effective on November 24, 1980, the levels of restraint established for categories 638 and 639 to the following:

Category	*Amended 12-month level of restraint* [1]
638	1,727,489 dozen
639	5,024,887 dozen

The actions taken with respect to the authorities in Taiwan, and with respect to imports of manmade fiber textile products from Taiwan have been determined by the Committee for the Implementation of Textile Agreements to involve foreign affairs functions of the United States. Therefore, these directions to the Commissioner of Customs, which are necessary to the implementation of such actions, fall within the foreign affairs exception to the rulemaking provisions of 5 U.S.C. 553. This letter will be published in the Federal Register.

Sincerely,

ARTHUR GAREL,
Acting Chairman, Committee for the Implementation of Textile Agreements.

U.S. DEPARTMENT OF COMMERCE,
INTERNATIONAL TRADE ADMINISTRATION,
Washington D.C., December 11, 1980.

Committee for the Implementation of Textile Agreements

COMMISSIONER OF CUSTOMS,
Department of the Treasury,
Washington, D.C.

DEAR MR. COMMISSIONER: This directive further amends, but does not cancel, the directive of December 21, 1979, from the chairman, Committee for the Implementation of Textile Agreements, concerning imports into the United States of certain cotton, wool, and manmade fiber textile products, produced or manufactured in Taiwan.

Under the terms of the Arrangement Regarding International Trade in Textiles done at Geneva on December 20, 1973, as extended on December 15, 1977; pursuant to the Bilateral Cotton, Wool and Man-Made Fiber Textile Agreement of June 8, 1978, as amended, concerning cotton, wool, and manmade fiber textile products from

[1] The levels of restraint have not been adjusted to reflect any imports after Dec. 31, 1979.

Taiwan; and in accordance with the provisions of Executive Order 11651 of March 3, 1972, as amended by Executive Order 11951 of January 6, 1977, you are directed, effective on December 11, 1980 and for the 12-month period which began on January 1, 1980, and extends through December 31, 1980, to prohibit entry for consumption or withdrawal from warehouse for consumption of manmade fiber textile products in categories 633/634/635, 641, and 648, produced or manufactured in Taiwan in excess of the following amended levels of restraint:

Category	*Amended 12-month level of restraint* [1]
633/634/635	1,439,877 dozen of which not more than 945,489 dozen shall be in categories 633/634 and not more than 706,236 dozen shall be in category 635.
641	690,168 dozen
648	3,118,964 dozen

The actions taken with respect to the authorities in Taiwan and with respect to manmade fiber textile products in categories 633/634/635, 641, and 648 from Taiwan have been determined by the Committee for the Implementation of Textile Agreements to involve foreign affairs functions of the United States. Therefore, these directions to the Commissioner of Customs, which are necessary for the implementation of such actions, fall within the foreign affairs exception to the rulemaking provisions of 5 U.S.C. 553. This letter will be published in the Federal Register.

Sincerely,

ARTHUR GAREL,
Acting Chairman, Committee for the Implementation of Textile Agreements.

(T.D. 81-104)

Manmade Fiber Textile Products—Restriction on Entry

Restriction on entry of manmade fiber textile products manufactured or produced in the Republic of the Philippines

There is published below a directive of November 5, 1980, received by the Commissioner of Customs from the chairman, Committee for the Implementation of Textile Agreements, concerning restriction on entry of manmade fiber textile products in category

[1] The levels of restraint have not been adjusted to reflect any imports after Dec. 31, 1979.

635 manufactured or produced in the Republic of the Philippines. This directive amends, but does not cancel, that committee's directive of December 19, 1979 (T.D. 80–51).

This directive was published in the Federal Register on November 10, 1980 (45 F.R. 74532), by the committee.

QUO–2–1

Dated: April 21, 1981.

WILLIAM D. SLYNE
(For Richard R. Rosettie, Acting
Director, Duty Assessment Division).

U.S. DEPARTMENT OF COMMERCE,
INTERNATIONAL TRADE ADMINISTRATION,
Washington, D.C., November 5, 1980.

Committee for the Implementation of Textile Agreements

COMMISSIONER OF CUSTOMS,
Department of the Treasury,
Washington, D.C,

DEAR MR. COMMISSIONER: This directive further amends, but does not cancel, the directive issued to you on December 19, 1979, by the chairman, Committee for the Implementation of Textile Agreements, concerning imports into the United States of certain cotton, wool, and manmade fiber textile products, produced or manufactured in the Philippines.

Under the terms of the Arrangement Regarding International Trade in Textiles done at Geneva on December 20, 1973, as extended on December 15, 1977; pursuant to the Bilateral Cotton, Wool, and Man-Made Fiber Textile Agreement of August 22 and 24, 1978, as amended, between the Governments of the United States and the Republic of the Philippines; and in accordance with the provisions of Executive Order 11651 of March 3, 1972, as amended by Executive Order 11951 of January 6, 1977, you are directed to prohibit, effective on November 12, 1980, and for the 12-month period beginning on January 1, 1980, and extending through December 31, 1980, entry into the United States for consumption and withdrawal from warehouse for consumption of manmade fiber textile products in category 635pt., produced or manufactured in the Philippines, in excess of the following level of restraint:

Category	*12-month level of restraint*[1]	
635pt.[2]	196,419	dozen

[1] The level of restraint has not been adjusted to reflect any imports after Dec. 31, 1979. Imports during the period January–August 1980 have amounted to 110,949 dozen.

[2] In category 635, all TSUSA numbers except TSUSA 382.7828.

Manmade fiber textile products in the foregoing category which have been exported to the United States prior to January 1, 1980, shall not be subject to this directive.

Manmade fiber textile products in the foregoing category which have been released from the custody of the U.S. Customs Service under the provisions of 19 U.S.C. 1448(b) or 1484(1)(A) prior to the effective date of this directive shall not be denied entry under this directive.

A detailed description of the textile categories in terms of TSUSA numbers was published in the Federal Register on February 28, 1980 (45 F.R. 13172), as amended on April 23, 1980 (45 F.R. 27463) and August 12, 1980 (45 F.R. 53506).

In carrying out the above directions, the Commissioner of Customs should construe entry into the United States for consumption to include entry for consumption into the Commonwealth of Puerto Rico.

The actions taken with respect to the Government of the Republic of the Philippines and with respect to imports of manmade fiber textile products from the Philippines have been determined by the Committee for the Implementation of Textile Agreements to involve foreign affairs functions of the United States. Therefore, these directions to the Commissioner of Customs, which are necessary for the implementation of such actions, fall within the foreign affairs exception to the rulemaking provisions of 5 U.S.C. 553. This letter will be published in the Federal Register.

Sincerely,

PAUL T. O'DAY,
Chairman, Committee for the Implementation of Textile Agreements.

(T.D. 81-105)

Wool and Manmade Fiber Textile Products—Restriction on Entry

Restriction on entry of wool and manmade fiber textile products manufactured or produced in Poland

There is published below a directive of October 10, 1980, received by the Commissioner of Customs from the acting chairman, Committee for the Implementation of Textile Agreements, concerning restriction on entry of wool and manmade fiber textile products in category 443/643/644 manufactured or produced in Poland. This directive amends, but does not cancel, that committee's directive of December 20, 1979 (T.D. 80-61).

This directive was published in the Federal Register on October 17, 1980 (45 F.R. 68994), by the committee.

(QUO-2-1)

Dated: April 21, 1981.

WILLIAM D. SLYNE
(For Richard R. Rosettie, Acting
Director, Duty Assessment Division).

U.S. DEPARTMENT OF COMMERCE,
INTERNATIONAL TRADE ADMINISTRATION,
Washington, D.C., October 10, 1980.

Committee for the Implementation of Textile Agreements

COMMISSIONER OF CUSTOMS,
Department of the Treasury,
Washington, D.C.

DEAR MR. COMMISSIONER: On December 20, 1979, the chairman Committee for the Implementation of Textile Agreements, directed you to prohibit entry during the 12-month period beginning on January 1, 1980, and extending through December 31, 1980, of cotton, wool, and manmade fiber textile products in certain specified categories, produced or manufactured in Poland, in excess of designated levels of restraint. The chairman further advised you that the levels of restraint are subject to adjustment.[1]

Under the terms of the Arrangement Regarding International Trade in Textiles done at Geneva on December 20, 1973, and extended on December 15, 1977; pursuant to the Bilateral Cotton, Wool and Man-Made Fiber Textile Agreement of January 9 and 12, 1978, as amended, between the Governments of the United States and Polish People's Republic; and in accordance with the provisions of Executive Order 11651 of March 3, 1972, as amended by Executive Order 11951 of January 6, 1977, you are directed, effective on October 10, 1980, to increase the 12-month level of restraint for category 443/643/644 to 13,342 dozen.[2]

The actions taken with respect to the Government of the Polish People's Republic and with respect to imports of wool and manmade fiber textile products from Poland have been determined by the Com-

[1] The term "adjustment" refers to those provisions of the Bilateral Cotton, Wool and Man-Made Fiber Textile Agreement of Jan. 9 and 12, 1978, as amended, between the Governments of the United States and the Polish People's Republic which provide, in part, that: (1) Within the aggregate and applicable group limits of the agreement, specific levels of restraint may be exceeded by designated percentages; (2) these levels may also be increased for carryover and carryforward; and (3) administrative arrangements or adjustments may be made to resolve minor problems arising in the implementation of the agreement.

[2] The level of restraint has not been adjusted to reflect any imports after Dec. 31, 1979.

best copy available

mittee for the Implementation of Textile Agreements to involve foreign affairs functions of the United States. Therefore, these directions to the Commissioner of Customs, which are necessary for the implementation of such actions, fall within the foreign affairs exception to the rule-making provisions of 5 U.S.C. 553. This letter will be published in the Federal Register.

Sincerely,

ARTHUR GAREL,
Acting Chairman, Committee for the Implementation of Textile Agreements.

(T.D. 81-106)

Wool and Manmade Fiber Textile Products—Restriction on Entry

Restriction on entry of wool and manmade fiber textile products manufactured or produced in Romania

There is published below a directive of December 17, 1980, received by the Commissioner of Customs from the chairman, Committee for the Implementation of Textile Agreements, concerning restriction on entry of wool and manmade fiber textile products in certain categories manufactured or produced in Romania. This directive amends, but does not cancel, that committee's directive of December 12, 1979 (T.D. 80-49).

This directive was published in the Federal Register on December 22, 1980 (45 F.R. 84116), by the committee.

(QUO-2-1)

Dated: April 21, 1981.

WILLIAM D. SLYNE
(For Richard R. Rosettie, Acting Director, Duty Assessment Division).

U.S. DEPARTMENT OF COMMERCE,
INTERNATIONAL TRADE ADMINISTRATION,
Washington, D.C., December 17, 1980.

Committee for the Implementation of Textile Agreements

COMMISSIONER OF CUSTOMS,
Department of the Treasury,
Washington, D.C.

DEAR MR. COMMISSIONER: This directive further amends, but does not cancel, the directive of December 12, 1979, from the chairman of

the Committee for the Implementation of Textile Agreements, which directed you, among other things, to prohibit entry of certain specified categories of wool and manmade fiber textile products, produced or manufactured in Romania and exported during the 12-month period which began on January 1, 1980.

Under the terms of the Arrangement Regarding International Trade in Textiles done at Geneva on December 20, 1973, as extended on December 15, 1977; pursuant to the Bilateral Wool and Man-Made Fiber Textile Agreement of June 17, 1977, as amended and extended, between the Governments of the United States and the Socialist Republic of Romania; and in accordance with the provisions of Executive Order 11651 of March 3, 1972, as amended by Executive Order 11951 of January 6, 1977, you are directed to prohibit, effective on December 22, 1980, and for the 15-month period beginning on January 1, 1980, and extending through March 31, 1981, entry into the United States for consumption and withdrawal from warehouse for consumption of wool and manmade fiber textile products in categories 435/444, 443, 634, 635, 643/644, and 647, produced or manufactured in Romania, in excess of the following levels of restraint:

Category	*15-month level of restraint* [1]
435/444	8,703 dozen
443	9,372 dozen
634	66,586 dozen of which not more than 21,186 dozen shall be in TSUSA Nos. 376.5609, 380.0445, 380.5167, 380.5169, 380.8410, 380.8416, 380.8418, 380.8419, and 791.7471; and not more than 45,400 dozen shall be in TSUSA Nos. 380.0405, 380.8101, 380.8106, 380.8109, 380.8112, and 791.7460.
635	44,189 dozen
643/644 pt.[2]	28,745 dozen
643/644 pt.[3]	2,604 dozen
647	58,989 dozen

The actions taken with respect to the Government of the Socialist Republic of Romania and with respect to imports of wool and man-made fiber textile products from Romania have been determined by the Committee for the Implementation of Textile Agreements

[1] The levels of restraint have not been adjusted to reflect any entries after Dec. 31, 1979.
[2] In category 643/644, only TSUSA Nos. 380.0464, 380.5176, 380.8451, 380.8452, 382.0478, 382.4282, and 382.8187.
[3] In category 643/644, all TSUSA numbers in the category except those listed in footnote 2.

to involve foreign affairs functions of the United States. Therefore, these directions to the Commissioner of Customs, which are necessary for the implementation of such actions, fall within the foreign affairs exception to the rulemaking provisions of 5 U.S.C. 553. This letter will be published in the Federal Register.

Sincerely,

PAUL T. O'DAY,
Chairman, Committee for the Implementation of Textile Agreements.

(T.D. 81-107)

Cotton and Manmade Fiber Textile Products—Restriction on Entry

Restriction on entry of cotton and manmade fiber textile products manufactured or produced in the Republic of the Philippines

There is published below a directive of July 30, 1980, received by the Commissioner of Customs from the acting chairman, Committee for the Implementation of Textile Agreements, concerning restriction on entry of cotton and manmade fiber textile products in certain categories manufactured or produced in the Republic of the Philippines. This directive further amends, but does not cancel, that committee's directive of December 19, 1979 (T.D. 80-51).

This directive was published in the Federal Register on August 5, 1980 (45 F.R. 51871), by the committee.

(QUO-2-1)

Dated: April 21, 1981.

WILLIAM D. SLYNE
(For Richard R. Rosettie, Acting Director, Duty Assessment Division).

U.S. DEPARTMENT OF COMMERCE,
INTERNATIONAL TRADE ADMINISTRATION,
Washington, D.C., July 30, 1980.

Committee for the Implementation of Textile Agreements

COMMISSIONER OF CUSTOMS,
Department of the Treasury,
Washington, D.C.

DEAR MR. COMMISSIONER: This directive further amends, but does not cancel, the directive issued to you on December 19, 1979, by the

chairman, Committee for the Implementation of Textile Agreements, concerning imports into the United States of certain cotton, wool, and manmade fiber textile products, produced or manufactured in the Philippines.

Under the terms of the Arrangement Regarding International Trade in Textile done at Geneva on December 20, 1973, as extended on December 15, 1977; pursuant to the Bilateral Cotton, Wool and Man-Made Fiber Textile Agreement of August 22 and 24, 1977, as amended, between the Governments of the United States and the Republic of the Philippines; and in accordance with the provisions of Executive Order 11651 of March 3, 1972, as amended by Executive Order 11951 of January 6, 1977, you are directed to prohibit, effective on August 6, 1980, and for the 12-month period beginning on January 1, 1980, and extending through December 31, 1980, entry into the United States for consumption and withdrawal from warehouse for consumption of cotton textile products in category 335, produced or manufactured in the Philippines, in excess of the following level of restraint and to adjust the level for category 641 pt:

Category	*12-month level of restraint* [1]
335 pt.[2]	23, 927 dozen
335 pt.[3]	32, 562 dozen
641 pt.[4]	163, 139 dozen

Textile products in category 335 which have been exported to the United States prior to January 1, 1980 shall not be subject to this directive.

Textile products in category 335 which have been released from the custody of the U.S. Customs Service under the provisions of 19 U.S.C. 1448(b) or 1484(1)(A) prior to the effective date of this directive shall not be denied entry under this directive.

A detailed description of the textile categories in terms of TSUSA numbers was published in the Federal Register on February 28, 1980 (45 F.R. 13172), as amended on April 23, 1980 (45 F.R. 27463).

In carrying out the above directions, entry into the United States for consumption shall be construed to include entry for consumption into the Commonwealth of Puerto Rico.

The actions taken with respect to the Government of the Republic of the Philippines and with respect to imports of cotton and manmade fiber textile products from the Philippines have been determined by the Committee for the Implementation of Textile Agreements to involve foreign affairs functions to the United States. Therefore, the directions to the Commissioner of Customs, which are necessary

[1] The levels of restraint have not been adjusted to reflect any imports after Dec. 31, 1979.
[2] In category 335, all TSUSA numbers except 382.1202, 382.1204, 382.1206, 382.1217, and 382.1223.
[3] In category 335, only TSUSA Nos. 382.1202, 382.1204, 382.1206, 382.1217, and 382.1223.
[4] In category 641, only TSUSA Nos. 382.0459, 382.0461, 382.8133, 382.8137, 382.8143, and 382.8144.

for the implementation of such actions, fall within the foreign affairs exception to the rulemaking provisions of 5 U.S.C. 553. This letter will be published in the Federal Register.

Sincerely,

ARTHUR GAREL,
Acting Chairman, Committee for the Implementation of Textile Agreements.

U.S. DEPARTMENT OF COMMERCE,
INTERNATIONAL TRADE ADMINISTRATION,
Washington, D.C., July 30, 1980.

Committee for the Implementation of Textile Agreements

COMMISSIONER OF CUSTOMS,
Department of the Treasury,
Washington, D.C.

DEAR MR. COMMISSIONER: To facilitate implementation of the Bilateral Cotton, Wool and Man-Made Fiber Textile Agreement with the Philippines it would be appreciated if you would charge the indicated amounts to the following category. These charges are for the period which began on January 1 and extended through April 30, 1980.

Category	*Amount to be charged*
335 [1]	5,911 dozen
335 [2]	5,637 dozen

This letter will not be published in the Federal Register.

Sincerely,

ARTHUR GAREL,
Acting Chairman, Committee for the Implementation of Textile Agreements.

(T.D. 81-108)

Courier Services: Procedure for Processing Importations by Courier Services

AGENCY: U.S. Customs Service, Department of the Treasury

ACTION: Final rule.

---

[1] In category 335, all TSUSA numbers except 382.1202, 382.1204, 382.1206, 382.1217, and 382.1223.
[2] In category 335 only TSUSA Nos. 382.1202, 382.1204, 382.1206, 382.1217, and 382.1223.

SUMMARY: This document announces that Customs has established uniform procedures for processing importations by courier services. The procedures, designed to expedite the processing of importations made by courier services and to afford protection of the revenue, are being implemented in response to questions which have arisen in regard to Customs processing of courier service importations. They were prepared after review of public comments received in response to a notice inviting comments on Customs handling of courier services.

EFFECTIVE DATE: 30 days after the date of publication in the Federal Register.

FOR FURTHER INFORMATION CONTACT: Marcia Kaplan, Classification and Value Division, U.S. Customs Service, 1301 Constitution Avenue NW., Washington D.C. 20229; 202-566-2938.

SUPPLEMENTARY INFORMATION:

BACKGROUND

Courier services provide overnight delivery service of articles from overseas. Usually, they import: intangibles (described in general headnote 5, Tariff Schedules of the United States); commercial drawings or plans; business records; diagrams; and other data. Although intangibles are exempt from entry, all other articles, unless specifically exempted from entry as provided for in 19 CFR 141.4, are required to be entered.

Courier services generally import their shipments in two ways. One is by use of an onboard courier, an individual who brings the articles with him. The other is by use of a cargo courier.

The onboard courier usually is an employee of the courier service who imports the shipment as accompanying baggage, filing a baggage declaration (see 19 CFR 148.23). This courier typically brings 10 to 15 duffelbags each containing a large number of separately addressed envelopes and parcels. Often there is commingling of both intangibles and other dutiable and nondutiable articles. Articles within the duffelbags or pouches which, under Customs regulations, cannot be cleared on the baggage declaration require the filing of an entry, formal or informal.

The cargo courier, on the other hand, usually is a courier service employee overseas who arranges for an unaccompanied shipment of the article to a courier service in the United States which is generally named as consignee on the shipping documents. Another courier service employee in the United States, accompanied by a customhouse broker, picks up the shipment on arrival and the broker files the entries, formal and informal, for articles which generally are of the same kind imported by onboard couriers.

At the request of members of the importing community, Customs published a notice in the Federal Register on June 19, 1980 (45 F.R. 41565), inviting the public to comment on Customs handling of courier services. By notice published in the Federal Register on August 22, 1980 (45 F.R. 56221), the time for the submission of comments was extended from August 18 to September 18, 1980.

Specifically, the public was asked to comment on the following questions which arose in regard to certain problems encountered during the processing of importations made by courier services:

(1) Should the bags or pouches imported by onboard couriers be treated as accompanying baggage of the individual courier?

(2) May a courier service designated as the consignee of merchandise brought or shipped to the United States by courier service employees file a formal or informal entry in its own name? (Under 19 U.S.C. 1483, all merchandise imported into the United States is deemed the property of the person to whom that property is consigned).

(3) May a courier service which is not the consignee of the merchandise and has not been authorized in writing by the consignee, execute a power of attorney designating a broker to make the entry?

Numerous comments from business organizations, various professions, customhouse brokers, and courier services were received in response to the notice. Following an analysis of the comments and a review of the issues, Customs reached the following conclusions:

A. A courier service, by virtue of possession, may clear baggage through Customs by means of a baggage declaration to the extent authorized by section 148.23(c), Customs Regulations (19 CFR 148.23(c)).

B. If a courier service qualifies as the consignee under 19 U.S.C. 1483, it may file formal or informal entries in its own name or may, by a power of attorney, authorize a customhouse broker to make entry. One of the forms of evidence of right to make entry listed in section 141.11(a), Customs Regulations (19 CFR 141.11(a)), shall be filed in connection with the entry.

Entry and clearance of courier service importations will be treated in accordance with these legal principles. To assure expeditious clearance, a courier service will be required to separate sacks into two groups:

a. Merchandise transported as baggage and limited to (1) intangibles which, although exempt from entry, may include currency or other monetary instruments subject to the reporting requirements of 31 CFR 103.23, and (2) business records which

the courier service proposes to clear via a baggage declaration, pursuant to section 148.23(c), Customs Regulations (19 CFR 148.23(c)).

b. All other items. This category generally will not be examined in the passenger clearance area, but will be removed to the cargo area for normal processing as air cargo. Formal or informal entry normally will be required.

If a courier commingles other merchandise with business records and intangibles which he proposes to clear via a baggage declaration, the appropriate Customs officer will refer all sacks to the cargo processing area to ensure proper processing and adequate protection of the revenue.

District/area directors will prescribe operational safeguards to insure that couriers are conforming to the procedures. Where operationally feasible, pouches which may be cleared via a baggage declaration may be processed in passenger processing facilities. When protection of the revenue dictates, Customs will require a formal or informal entry for articles which a courier intended for clearance on a baggage declaration.

Processing of pouches requiring formal or informal entry will be conducted elsewhere than in the passenger inspection area, with facilities suitable for proper inspection of cargo or mail packages.

Regional commissioners and district/area directors will, based upon local conditions, determine if articles requiring formal or informal entry may be processed outside normal cargo processing duty hours, or whether they should be routed to the cargo area for processing during regular duty hours.

When protection of the revenue so requires, and in cases where a courier service continues to provide insufficient or inaccurate documentation or does not segregate the articles as prescribed, Customs will require that all courier pouches be transferred to the cargo area for processing.

In cases of continued violations, the district/area director will take action to impose the sanctions provided for violation of section 592, Tariff Act of 1930, as amended (19 U.S.C. 1592), and may refer the matter to the Office of Investigations, U.S. Customs Service, for further investigation.

Unaccompanied courier shipments will be processed in the same manner as other cargo shipments.

DRAFTING INFORMATION

The principal author of this document was Lawrence P. Dunham, Regulations and Information Division, U.S. Customs Service. How-

ever, personnel from other Customs offices participated in its development.

GEORGE C. CORCORAN, Jr.,
Acting Commissioner of Customs.

Approved: April 6, 1981.

JOHN P. SIMPSON,
Acting Assistant Secretary of the Treasury.

[Published in the Federal Register, Apr. 29, 1981 (46 F.R. 24069)]

Recent Unpublished Customs Service Decisions

The following listing of recent administrative decisions issued by the Office of Regulations and Rulings, U.S. Customs Service, and not otherwise published, is published for the information of Customs officers and the importing community. Although the decisions are not of sufficient general interest to warrant publication as Treasury decisions, the listing describes the issues involved and is intended to aid Customs officers and concerned members of the public in identifying matters of interest which recently have been considered by the Office of Regulations and Rulings.

A copy of any decision included in this listing, identified by its date and file number, may be obtained in a form appropriate for public distribution upon written request to the Office of Regulations and Rulings, Attention: Legal Reference Area, room 2404, U.S. Customs Service, 1301 Constitution Avenue NW., Washington, D.C. 20229. These copies will be made available at a cost to the requester of $0.10 per page. However, the Customs Service will waive this charge if the total number of pages copied is 10 or less.

Decisions listed in earlier issues of the CUSTOMS BULLETIN, through December 8, 1980, are available in microfiche format at a cost of $27.15 ($0.15 per sheet of fiche). It is anticipated that additions to the microfiche will be made quarterly and subscriptions are available. Requests for the microfiche now available and for subscriptions should be directed to the Legal Reference Area. Subscribers will automatically receive updates as they are issued and will be billed accordingly.

Dated: April 21, 1981.

B. JAMES FRITZ,
Director,
Regulations and Information Division.

Date of Decision	File No.	Issue
3-19-81	104975	Vessels: Classification of sailboats imported from Canada (696.05)

Date of Decision	File No.	Issue
3-12-81	104997	Vessels: Clearance of vessels to Cummunist-bloc countries
3-12-81	105007	Vessels: Transportation of travel agents on foreign vessel between ports in the United States
3-12-81	105036	Vessels: Use of a foreign-built vessel to be registered in the United States as a geophysical research survey vessel
3-19-81	105040	Vessels: Request for classification rates on Fiberglass sailboards (696.05)
3-13-81	105049	Instruments of international traffic: Reusable plastic buckets used in the shipment of shrimp
3-16-81	105071	Instruments of international traffic: Diversion of Canadian railroad cars
3-18-81	105074	Vessels: Request for duty-free importation of a yacht by nonresident
2-27-81	542203	Classification: Export value of office furniture cannot be based on home market price list
3- 9-81	542297	Classification: Liquidation of entries of phonograph records, cassettes, and tapes appraised under export value
3-17-81	714629	Entry: Importation of switchblade or stiletto knives into the United States.
3- 6-81	715612	Entry: Request for refund of duty under diplomatic duty-free entry provision
3-17-81	715673	Country-of-origin marking: Blended wine
3-17-81	716053	Country-of-origin marking: Leather footwear uppers
1-27-81	800006	Classification: Para diisopropyl benzene (402.36)
1-27-81	800032	Classification: Fluid, frozen and powdered soy milk (166.40, 183.05)
2-18-81	800040	Classification: Incoloy 825 tubing and AISI 450 tubing (620.42, 610.52, 606.00)
3- 5-81	800056	Classification: Women's uniform dresses (382.04, 382.81)
3- 6-81	800057	Classification: Men's garments (378.05, 380.00)
2-19-81	800062	Classification: Organic acids (425.04)
2-10-81	800073	Classification: Low voltage power supply (682.60)
2-27-81	800078	Classification: Toy and game articles (734.20, 737.95, 688.44)
3- 2-81	800084	Classification: Extrait Raffermissant Corporel LS. ER/80.099 (425.52)
2-19-81	800091	Classification: Vinyl/acrylic knit gloves (705.83)
2-19-81	800093	Classification: Elastic rail fastenings (657.25)
2-26-81	800096	Classification: Metal buttons with pins, textile material patch (740.38, 389.62, 386.50)
3- 6-81	800097	Classification: Pig feeders (666.00)
2-26-81	800101	Classification: Hammocks (386.04, 386.09, 389.62)
3- 4-81	800103	Classification: Tapered tubular steel poles (657.25)
2-26-81	800115	Classification: Brazed aluminum heat exchanger (661.68)
2-26-81	800116	Classification: Furnace (653.52)
2-19-81	800118	Classification: 1,4 naphthoquinone 2-sodium sulphonate (403.96)

346-390 O - 81 - 6

Date of Decision	File No.	Issue
3- 6-81	800120	Classification: Security door latch (647.03, 647.05)
3- 6-81	800125	Classification: Insulation board (245.80)
3- 6-81	800127	Classification: Garden tool (651.47)
3- 5-81	800129	Classification: Pens (760.15, 760.05)
2-26-81	800130	Classification: Brocade jewelry roll (389.62)
3- 2-81	800131	Classification: Knitting bag (386.09, 386.04)
2-26-81	800142	Classification: Utility vehicle (692.02, 945.69)
3- 4-81	800162	Classification: Knitted adult-sized tights (382.58, 382.54)
3- 6-81	800182	Classification: Trifold portfolio type writing pad (706.60)
3- 6-81	800199	Classification: Methyl tertiary butyl ether (475.25, 428.96)
3- 6-81	800204	Classification: Studio light (688.45, 687.10)
3- 6-81	800214	Classification: DL-Malic Acid (425.99)
3- 5-81	800215	Classification: Concentrated beet juice (183.05)
2-26-81	061730	Classification: Mousse dessert powder (182.98)
2-11-81	064790	Classification: Gold leaf (644.52)
3-12-81	065243	Classification: Athletic oxfords with plastic-fiber uppers and rubber soles (700.60)
1-16-81	065336	Classification: Toy spinball game for tots (737.95)
3-11-81	065369	Classification: Radio remote controlled model vehicle systems (685.60, 737.15)
2-26-81	065486	Classification: Athletic footwear (700.35, 700.58, 700.45, 700.30)
2-26-81	065668	Classification: Women's open toe, slip on, high heel clogs (700.60)
2- 5-81	065722	Classification: Flax yarn (305.04)
2- 5-81	065830	Classification: Spring operated positive crankcase ventilation (PVC) valve (680.17)
2-19-81	065843	Classification: Label with one letter deviating from normal
3-19-81	065909	Classification: Rubber erasers (737.95)
3-17-81	065918	Classification: Plastic figure of a penguin on a sled (737.95)
2-26-81	065950	Classification: Copper slag lumps (603.50)
3-12-81	066077	Classification: Pollen substitute used for feeding honeybees (184.85)
2- 5-81	066238	Classification: Temporarily strung coral frangia (740.38, 741.15)
2- 5-81	066334	Classification: Microprocessor units (676.15)
2-26-81	066404	Classification: Agricultural vehicle (692.34)
3-19-81	066460	Classification: Plastic balloon footwear bottom (700.60)
2-19-81	066547	Classification: Silver powder to be used in various electronic compositions (605.48)
2- 4-81	066590	Classification: FYT 750 injection molding machine (678.10)
2-27-81	066626	Classification: Light foot sandal (700.60, 700.95)
3-17-81	066711	Classification: Child's jogger shoe (700.60)

Date of Decision	File No.	Issue
2-19-81	066736	Classification: Work overalls ornamented with label (380.00)
2-26-81	066832	Classification: Cotton residue from garments put through a garnet machine (300.45 300.50)
2- 4-81	066891	Clas ification: Baby bouncinette (727.55, 727.45)
2-26-81	066918	Classification: Boots and a nylon overall (700.53, 700.60, 376.56)
3-10-81	066988	Classification: Polytetrafluoroethylene tubular material (772.65)
3- 9-81	068119	Classification: Moon boot with unit molded plastic bottom and a plastic coated fabric upper (700.58)
2-26-81	068165	Classification: Lighter flints (755.35)

The following listing of recent administrative decisions issued by the Office of Regulations and Rulings, U.S. Customs Service, and not otherwise published, is published for the information of Customs officers and the importing community. Although the decisions are not of sufficient general interest to warrant publication as Treasury decisions, the listing describes the issues involved and is intended to aid Customs officers and concerned members of the public in identifying matters of interest which recently have been considered by the Office of Regulations and Rulings.

A copy of any decision included in this listing, identified by its date and file number, may be obtained in a form appropriate for public distribution upon written request to the Office of Regulations and Rulings Attention: Legal Reference Area, room 2404, U.S. Customs Service, 1301 Constitution Avenue NW., Washington, D.C. 20229. These copies will be made available at a cost to the requester of $0.10 per page. However, the Customs Service will waive this charge if the total number of pages copied is 10 or less.

Decisions listed in earlier issues of the CUSTOMS BULLETIN, through December 9, 1980, are available in microfiche format at a cost of $27.15 ($0.15 per sheet of fiche). It is anticipated that additions to the microfiche will be made quarterly and subscriptions are available. Requests for the microfiche now available and for subscriptions should be directed to the Legal Reference Area. Subscribers will automatically receive updates as they are issued and will be billed accordingly.

Dated: April 22, 1981.

MARVIN M. AMERNICK,
(For Director,
Regulations and Information Division.)

Date of Decision	File No.	Issue
4- 1-81	104999	Instruments of International Traffic: Steel containers, intermodel tank containers, and container frames
4- 1-81	105079	Instruments of International Traffic: Multipot seedling containers
4- 2-81	105084	Vessels: Use of a foreign-built fishing vessel as a factory processing vessel in U.S. waters
3-26-81	542157	Classification: Synthetic yarns, fibers and filaments
3-26-81	542231	Classification: Whether certain Canadian inland freight, charges form part of the transaction value under section 402(b), Tariff Act of 1930
2-13-81	055744	Classification: GSP: Above ground swimming pools (657.25)
3-23-81	061871	Classification: Synthetic yarn
2-20-81	064423	Classification: Fishing hook (731.05)
2-18-81	064534	Classification: Pant sled (735.20)
2-17-81	064732	Classification: Electric food refrigerator-warmer (678.50)
2-27-81	064837	Classification: Tubing (606.00, 606.02)
3-17-81	065206	Classification: Tool joints (610.80)
3-10-81	065337	Classification: Ladies footwear (700.60, 700.68)
3- 6-81	065452	Classification: Field coil winding machines (674.35, 678.50)
3-17-81	065454	Classification: Agricultural tractors (692.34, 800.00)
1-16-81	065472	Classification: Artificial polyester flowers (389.62, 748.-20, 748.21)
3- 5-81	065473	Classification: Natural latex booties (700.53, 700.90)
2-17-81	065494	Classification: Portable automobile polisher (683.20)
3-17-81	065497	Classification: Infant garments (378.60)
3-17-81	065541	Classification: Honey processing equipment (640.35, 657.25, 661.68, 666.00)
2-18-81	065559	Classification: Men's casual shoes (700.60)
2-23-81	065572	Classification: Self-propelled railway cars (690.40)
3- 3-81	065612	Classification: Lumber wrap (253.35)
3- 3-81	065616	Classification: Fireplace energy saver (661.06)
2-27-81	065620	Classification: Lubricating oil additive: polyalkymethacrylate in a hydrocarbon base (407.15, 432.10, 445.05)
3- 3-81	065734	Classification: Helical gear used in portable electric hand tools (680.49)
2-26-81	065782	Classification: Piston belt (389.62, 657.25)
3- 3-81	065828	Classification: Fish caught in fishery conservation zone
3- 4-81	065838	Classification: Telescopic mast (664.10)
2-19-81	065868	Classification: Replacement parts for cultivating tractors and air cultivators (666.00, 692.30, 692.34)
3-17-81	065869	Classification: Tubular tape of manmade fibers (389.62)
3-25-81	065873	Classification: Textile machinery (664.10, 670.00, 670.06)
3- 6-81	065897	Classification: Trucks or bogies (690.35, 690.40)
3- 3-81	065911	Classification: Plastic jerry cans (774.55)
3-25-81	065919	Classification: Bed-harness system for hospital use (389.40, 389.62)

Date of Decision	File No.	Issue
3-18-81	065925	Classification: Glassmaking machines (661.68, 678.30, 678.50)
3- 2-81	065940	Classification: Dentyrbleach (413.36, 413.51)
3- 3-81	065963	Classification: Gold paste (656.10)
3- 3-81	065984	Classification: Accelerometer (688.47, 712.49, 712.52)
2-19 81	065989	Classification: Wire shelves and racks (657.25)
2-12-81	065995	Classification: File fabrics (346.45)
2-17-81	066059	Classification: Snaphooks (657.20)
3-17-81	066071	Classification: Articulated four-wheel cab-chassis vehicle (692.03, 692.16, 692.23)
2-17-81	066266	Classification: Metal refrigeration jackets (661.35)
3-10-81	066269	Classification: Mixture of C-6 hydrocarbons naphtha (475.35)
3-10-81	066270	Classification: Women's rubber and plastic thongs (American Selling Price)
3- 3-81	066294	Classification: Tooling machine (661.95, 674.42)
3- 5-81	066296	Classification: Concrete and plastic building products (511.61, 511.71, 770.07, 770.10)
1-16-81	066318	Classification: Nonelectric detonator device (755.40, 755.45, 755.50)
3-20-81	066367	Classification: Thermal incineration systems (661.30)
2-19-81	066493	Classification: Christmas decorations (207.00, 256.75, 386.04, 386.09, 389.62, 389.70, 355.25)
3-17-81	066536	Classification: Women's closed toe casual shoes (700.60)
3-24-81	066542	Classification: Aboveground steel walled swimming pools (GSP eligibility)
2-27-81	066552	Classification: Offset printing press (668.23, 807.00)
2-26-81	066574	Classification: Reciprocating pump parts (535.41, 536.15, 657.25, 660.97, 680.27, 681.39, 774.55)
2-12-81	066580	Classification: Rugby jerseys
3-19-81	066594	Classification: PVC figurines (737.40, 737.22, 737.95)
2-17-81	066621	Classification: Running shoes (700.35, 700.60)
3- 5-81	066622	Classification: Bib overalls (380.00)
3-20-81	066669	Classification: Corn and callous cutter (649.91)
3-24-81	066677	Classification: Wet spray chain saw attachment (662.50, 870.00)
2-18-81	066741	Classification: Handsaw guide, chain saw sharpening kit and guide (649.01-649.07, 657.25, 774.55)
2-20-81	066761	Classification: Christmas ornament (386.09)
3-20-81	066837	Classification: Jogging shoe (700.58)
3-17-81	066870	Classification: Partially assembled agricultural tractors (692.34)
3-17-81	066900	Classification: Flaring tool (648.97)
3- 3-81	066906	Classification: Methanol (427.97)
3-17-81	066950	Classification: Stepping controller, programable control system, variable frequency invertor (676.15, 676.30, 682.60, 684.64, 688.45)
2-19-81	066953	Classification: Zinkadus (407.15, 432.25)
2-20-81	066954	Classification: Plastic reflector (774.55)

Date of Decision	File No.	Issue
3–25–81	066956	Classification: Tylock safety band (692.32)
3– 5–81	066978	Classification: Women's blouse (382.00)
3–17–81	068008	Classification: Igniters for gas barbeques (682.95)
2–27–81	068014	Classification: Tie rod clamp (657.25)
2–26–81	068040	Classification: Women's knit underwear with lace edging (378.05, 378.35)
3–24–81	068043	Classification: Laminated woven fabric (356.25, 356.40)
3– 3–81	068122	Classification: Fan clutch (681.21)
3–23–81	068249	Classification: Truck-tractor chassis (692.29, 692.32)
3–17–81	068250	Classification: Silverplated brass candlesticks (653.35)
3–10–81	800094	Classification: Articles of clothing (382.04, 382.06, 382.78, 382.81, 704.45)
3–23–81	800113	Classification: Women's underwear (378.05 378.10, 378.15, 378.60)
3–16–81	800128	Classification: Polypropylene bags (385.53)
3–10–81	800164	Classification: Plastic sun visors (772.30)
3–12–81	800166	Classification: Woven cotton fishing/safari jacket (380.00)
3–16–81	800186	Classification: Homebrewing kit (183.05, 274.35, 437.48, 652.65, 772.15)
3–16–81	800189	Classification: Gym mats (735.20)
3–19–81	800196	Classification: Ventilator (661.06, 678.50)
3–17–81	800198	Classification: Spunbonded polyester nonwoven textile fabric (355.25)
3–23–81	800224	Classification: Hats (703.10, 702.56)
3–12–81	800232	Classification: Wooden poles (206.98)
3–17–81	800233	Classification: Rolls of yarn and wood material (207.00, 386.50, 389.62, 389.70)
3–17–81	800245	Classification: Man's shirt (380.04)
3–19–81	800253	Classification: Openwork fabrics and curtain panels (351.80, 365.50)
3–16–81	800254	Classification: Lithographed pamphlets (270.25)
3–18–81	800257	Classification: Phase shifting transformer and current transformers (682.07)
3–17–81	800260	Classification: Man's woven cotton denim jeans (380.39)
3–23–81	800292	Classification: Book with tape cassette (270.25, 724.40)

Decisions of the United States Court of Customs and Patent Appeals

(C.A.D. 1262)

BORDER BROKERAGE CO., INC. *v.* THE UNITED STATES, No. 80–17
(—— F. 2d ——)

1. ANTIDUMPING ACT OF 1921, AS AMENDED—STEEL REINFORCING BARS—AFFIRMATIVE DETERMINATION OF INTERNATIONAL TRADE COMMISSION OF INJURY.

Appeal from the judgment of the U.S. Customs Court (now the U.S. Court of International Trade), 83 Cust. Ct. 97, C.D. 4825, 484 F. Supp. 901 (1979), dismissing appellant's action (challenging an administrative dumping finding) "for failure of proof." Affirmed.

2. ID.—EVIDENTIARY CONSIDERATIONS BEFORE COURT OF INTERNATIONAL TRADE.

The Government's answers to plaintiff's complaint are to be read in light of the allegations which, in this case, are addressed only to evidentiary considerations; the matters discussed for the first time in appellant's post-trial brief are wholly outside the pleadings.

3. DUE PROCESS—CONSIDERATION OF ISSUE BY COURT OF INTERNATIONAL TRADE.

The fifth amendment due process issue raised by appellant for the first time in its post-trial brief before the Court of International Trade should have been considered by that court; the Government was given 60 days to file a reply brief, so there would have been no prejudice from consideration of the issue; no refinement or clarification was required; and the matter was ripe for consideration.

4. ID.—CCPA TO DECIDE ISSUE RATHER THAN REMAND TO SAVE JUDICIAL ECONOMY AND AVOID DELAY.

Although it would be proper to remand, this court should decide the matter now in the interests of judicial economy and avoidance of any further delay in a case that the trial court described as one with a "14-year lifespan."

5. EQUALLY DIVIDED VOTE BY COMMISSION—MAJORITY RULE.

It is apparent from the Constitution itself, on which appellant's due process argument (that majority rule is inherent in the notion of

due process) is based, that majority rule is not an immutable ingredient in "our democratic scheme of things."

6. ID.—LEGISLATIVE HISTORY OF 19 U.S.C. 160(a).

Legislative history of the tie vote provision of 19 U.S.C. 160(a) relating to the International Trade Commission compels the conclusion that it was enacted for good and sufficient reasons.

U.S. Court of Customs and Patent Appeals, April 16, 1981

Appeal from U.S. Customs Court, C.A.D. No. 1262

[Affirmed]

Michael J. Horton, attorney for appellant, *George R. Tuttle* of counsel.

Alice Daniel, Assistant Attorney General, *David M. Cohen*, *Velta A. Melnbrencis*, attorneys for appellee.

[Oral argument on Dec. 2, 1980 by *Michael J. Horton* for appellant and *Velta A. Melnbrencis* for appellee.]

Before MARKEY, *Chief Judge*, RICH, BALDWIN, MILLER, and NIES, *Associate Judges*.

MILLER, Judge.

[1] This appeal is from a judgment of the U.S. States Customs Court (now the U.S. Court of International Trade), 83 Cust. Ct. 97, C.D. 4825, 484 F. Supp. 901 (1979), dismissing appellant's action (challenging an administrative dumping finding) "for failure of proof." We affirm.

BACKGROUND

The involved merchandise consists of steel reinforcing bars manufactured in and exported from Canada between February 19, 1963, and March 6, 1964, by Western Canada Steel, Ltd., through its subsidiary, Vancouver Rolling Mills, Ltd., of Vancouver, Canada. Pursuant to proceedings under section 201(a) of the Antidumping Act of 1921, as amended (19 U.S.C. 160(a)),[1] the Secretary of the Treasury (Secretary) determined that the steel reinforcing bars

[1] 19 U.S.C. 160. Foreign merchandise sold or likely to be sold at less than fair value

Initiation of investigation by International Trade Commission; determination of injury to U.S. industry; finding; publication of finding

(a) Whenever the Secretary of the Treasury (hereinafter called the Secretary) determines that a class or kind of foreign merchandise is being, or is likely to be, sold in the United States or elsewhere at less than its fair value, he shall so advise the U.S. International Trade Commission (hereinafter called the Commission), and the Commission shall determine within three months thereafter whether an industry in the United States is being or is likely to be injured, or is prevented from being established, by reason of the importation of such merchandise into the United States. The Commission, after such investigation as it deems necessary, shall notify the Secretary of its determination, and, if that determination is in the affirmative, the Secretary shall make public a notice (hereinafter in sec. 160 to 171 of this title called a finding) of his determination and the determination of the Commission. *For the purposes of this subsection, the Commission shall be deemed to have made an affirmative determination if the Commissioners of the Commission voting are evenly divided as to whether its determination should be in the affirmative or in the negative.* The Secretary's finding shall include a description of the class or kind of merchandise to which it applies in such detail as he shall deem necessary for the guidance of customs officers. [Italic supplied.]

were being, or were likely to be, sold at less than fair value (LTFV) in the United States.[2] After being so advised by the Secretary, the U.S. Tariff Commission, now the U.S. International Trade Commission (Commission), conducted an investigation and hearing and determined that an industry in the United States was being or was likely to be injured by reason of importation and sale of the steel reinforcing bars.[3] The vote of the six-member Commission was evenly divided. Thus, there was an affirmative determination of injury for purposes of 19 U.S.C. 160(a). The Secretary was so notified, and a finding of dumping was published on behalf of the Secretary in the Federal Register.[4]

Appellant unsuccessfully appealed to the Customs Service for reappraisement[5] and then brought an action in the Customs Court contesting the Secretary's LTFV determination and the Commission's injury determination. Regarding the injury determination, appellant's allegations in its complaint and the Government's answers were as follows:

Allegation

16. Plaintiff claims the imposition of antidumping duties is illegal, null and void on the ground that the Tariff Commission exceeded its statutory authority and denied the rights of the plaintiff to a fair and partial [sic] adjudication as guaranteed by the due process clause of the fifth amendment and the Administrative Procedure Act by finding the likelihood of injury to an American industry to exist when the evidence failed to support the finding that an injury was likely to be caused to an American industry by importations at less than fair value.

Answer

16. Admits that paragraph 16 sets forth plaintiff's claims, but denies the correctness thereof; further answering, *defendant avers that plaintiff has not suffered any legal wrong cognizable under the due process clause of the fifth amendment and the Administrative Procedure Act.* [Italic added.]

Allegation

17. Plaintiff claims the imposition of antidumping duties is illegal, null and void on the ground that the Tariff Commission violated its statutory authority and denied the plaintiff the right to a fair and impartial administrative adjudication as guaranteed by the due process clause of the fifth amendment and Administrative Procedure Act by basing its likelihood of injury determination in part on the mere presence of sales at less than fair value.

---

[2] 28 Fed. Reg. 14,245 (1963).
[3] 29 Fed. Reg. 3840 (1964).
[4] 29 Fed. Reg. 5341 (1964).
[5] Appellant has not contested the appraisements based upon export value, but rather, the values determined under the Antidumping Act and the underlying injury determination. See *City Lumber Co. v. United States*, 59 CCPA 89, C.A.D. 1045, 457 F. 2d 991 (1972).

Answer

17. Admits that paragraph 17 sets forth plaintiff's claim, but denies the correctness thereof; *incorporates and realleges paragraph 16, supra.* [Italic added.]

In its post-trial brief, appellant apparently abandoned the above allegations, prompting the Court of International Trade to find—

> that plaintiff's disenchantment with the finding of dumping lies not with the Treasury Secretary's LTFV determination per se nor with the Commission's injury determination per se in the particulars as set out in its complaint, but rather with the manner in which the Commission voted its injury determination. In the brief plaintiff contends that the provision in 19 U.S.C.A., section 160(a) (sec. 201(a), Antidumping Act of 1921, as amended) which allows the Commission to make a finding of likelihood of injury upon a divided vote of the commissioners voting, as in this case, is in violation of Parliamentary Law, the Rules of Congress, the 10th amendment to the Federal constitution, the due process clauses of the 5th and 14th amendments to the Federal constitution, Fundamental Rights, and the concept of Ordered Liberty. * * *

The court then said:

> None of these belated contentions advanced in plaintiff's brief are even remotely connected with allegations of the complaint. Moreover, the due process claims set forth in paragraphs 16 and 17 of the complaint are addressed to evidentiary considerations, while the due process contention in plaintiff's brief is not addressed to evidentiary matters or to the underlying administrative record at all. Consequently, the court fully agrees with defendant that the matters discussed in plaintiff's brief are wholly outside of the parameters of the pleadings, and, as such, are not properly before the court. Cf. *Charberjoy Distributors, Inc.* v. *United States*, 65 Cust. Ct. 459, 462, C.D. 4123 (1970), *aff'd on other grounds*, 59 CCPA 207, C.A.D. 1068, 465 F. 2d 922 (1972). And since plaintiff has in effect abandoned its claims as pleaded, the regularity of the challenged administrative determinations are [sic] presumed, the court not being persuaded of the existence of evidence in the record to the contrary. * * * In view of the 14-year lifespan of the case during which plaintiff has had ample opportunity to develop a plenary record for meaningful judicial review of the administrative determinations herein, the court is constrained to and does dismiss this action for failure of proof. * * *

83 Cust. Ct. ——, ——, 484 F. Supp. 901, 903.

OPINION

[2] Appellant argues that due process in all forms was raised by the Government in its responses to paragraphs 16 and 17 in plaintiff's complaint. However, we are persuaded that the Government's answers

are to be read in light of the allegations, which specify a failure of evidence to support the finding [of likelihood of injury] and the Commission's basing its likelihood of injury determination in part on the mere presence of sales at less than fair value.[6] Therefore, we agree with the Court of International Trade that appellant's fifth amendment due process claims set forth in paragraph 16 and 17 are addressed only to evidentiary considerations and that the matters discussed for the first time in appellant's post-trial brief are wholly outside the pleadings.

The question remains whether appellant's fifth amendment due process argument should, nevertheless, have been considered by the court below.[7] In deciding that this argument was not properly before it, the court cited *Charberjoy Distributors, Inc.* v. *United States, supra*, in which the Customs Court held that the issues of illegality of item 927.53, TSUS, was not before the court because the protests did not contain any claim of illegality. This court affirmed, but the issue of illegality was not involved in the appeal. In *Aronoff Galleries, Inc.* v. *United States*, 1 Cust. Ct. 225, C.D. 51 (1938), the Customs Court held that where the pleadings contained no statement that the suit was one which involved a controversy over a constitutional right (under art. 1, sec. 8, par. 1, and sec. 9, pars. 5 and 6), this being the sole question raised by plaintiff's post-trial brief, the question was not before the court.

It cited three Supreme Court cases: *Gibbes* v. *Zimmerman*, 290 U.S. 326 (1933), which held that the question of whether a State law violates the contract clause of the Federal Constitution could not be considered on appeal where there was no reliance on that clause in the pleadings; *Montana Catholic Missions* v. *Missoula County*, 200 U.S. 118 (1906), which held that the lower court was correct in dismissing a complaint for lack of jurisdiction where the complaint did not set forth any question involving the construction or application of the Federal Constitution, or the constitutionality of any law of the United States, or the validity or construction of any treaty made under its authority; and *Defiance Water Co.* v. *Defiance*, 191 U.S. 184 (1903), which held that the lower court erred in retaining jurisdiction on the ground that the case arose under the Constitution of the United States where it did not appear in the pleading that the suit was one which substantially involved a controversy over a right depending on construction of the Constitution or some law or treaty of the United States.

---

[6] The Court of International Trade has indicated that the purpose of the pleadings is to narrow the issues. *Lansing Co.* v. *United States*, 77 Cust. Ct. 92, 95 n.5, C.D. 4675, 424 F. Supp. 112, 115 n.5 (1976); *Berkey Technical Corp.* v. *United States*, 71 Cust. Ct. 275, 277 C.R.D. 73-27, 380 F. Supp. 786, 788 (1973).

[7] In this appeal, appellant has effectively abandoned the other belated contentions advanced in its post-trial brief, not arguing them in its appellate briefs except for the conclusory statement that the tie vote provision "is contrary to the concept of Ordered Liberty."

This court has ordinarily followed a practice of not considering issues raised for the first time on appeal. See, e.g., *American Mail Line, Ltd.* v. *United States*, 34 CCPA 1, C.A.D. 335 (1946) (holding that protests, claiming that articles and repairs assessed did not fall within the meaning of the term "equipment and repairs," did not support argument on the issue that the involved ship was not of U.S. registry, and citing requirements of sec. 514 of the Tariff Act of 1930 for filing protests); *International Seaway Trading Corp.* v. *United States*, 61 CCPA 20, 24–25, C.A.D. 1112, 488 F. 2d 544, 547 (1973); *Anderson Organization* v. *United States*, 46 CPCA 47, 50, C.A.D. 694 (1958); *Lloyd's Subagent* v. *United States*, 19 CCPA 408, 410, T.D. 45576 (1932); *United States* v. *Sheldon & Co.*, 5 Ct. Cust. Appls. 427, T.D. 34946 (1914). On the other hand, in *City Lumber Co.* v. *United States*, *supra* at 96, 457 F. 2d at 997, where the point that "the Commission gave weight to an alleged intention to systematically import cement at less than fair value" was raised for the first time on appeal by the appellant, this court said:

> We do not refuse consideration altogether on this technicality, however, because it seems preferable to state our view that intent is a perfectly legitimate matter for the Commission to take into consideration.

See also *United States* v. *Perry Ryer & Co.*, 41 CCPA 18, 30, C.A.D. 524 (1953).

No case has been brought to our attention in which the issue of deprivation of fifth amendment due process was raised for the first time in a post-trial grief and denied consideration. However, more recent opinions of the Supreme Court reflect a policy to consider constitutional issues not considered below where no refinement or clarification is required, and the question is ripe for consideration. *United States* v. *Petrillo*, 332 U.S. 1, 7 (1947). See *Glidden Co.* v. *Zdanok*, 370 U.S. 530, 536 (1962); *Turner* v. *City of Memphis*, 369 U.S. 350, 353 (1962). Several circuits have indicated a similar policy. In *Krause* v. *Sacramento Inn*, 479 F. 2d 988, 989 (1973), the Ninth Circuit said that examination of the issue of equal protection under the 14th amendment (not undertaken by the district court)—

> would not necessarily be foreclosed to our court merely because it was not presented below. When we have declined to consider issues raised by appellants for the first time on appeal * * * we have not been motivated by any jurisdictional limitation but merely by a rule of practice. Relaxation of this rule is sometimes appropriate in appeals wherein there are significant questions of general impact or when injustice might otherwise result. * * *

In *Board of Managers of Arkansas Training School for Boys* v. *George*, 377 F. 2d 228, *cert. denied*, 389 U.S. 845 (1967), the Eighth Circuit, in

an interlocutory appeal from denial of a motion to dismiss by appellant before appellant had even filed an answer, held an Arkansas statute unconstitutional, saying that "it is not necessary to attack statutes by specific pleading which on their face are unconstitutional" (citing *Turner* v. *City of Memphis*, *supra*). In *Government of Virgin Islands* v. *Testamark*, 528 F. 2d 742, 744 (1976), where a constitutional attack on a Virgin Islands statute had not been raised in the district court, the Third Circuit recognized that "we have the power to notice constitutional issues presented for the first time on appeal [citing the *Krause* v. *Sacramento Inn* and *Glidden Co.* v. *Zdanok* cases, *supra*]." However, the court stated that it would not exercise that power unless such issues were accompanied by an adequate record on which to base an informed decision, and it observed that "we have before us only the skimpiest of allegations set forth by appellant." In *Wratchford* v. *S.J. Groves & Sons Co.*, 405 F. 2d 1061 (CA4 1969), the district court had directed a verdict for the defendants on the assumption that, in the diversity action, the Maryland standard for sufficiency of the evidence applied. There was no suggestion that a Federal standard was applicable. After filling a notice of appeal, plaintiffs filed a motion contending, for the first time, that a Federal standard controlled. The motion was denied and no appeal was taken from the denial, so that, as the Fourth Circuit noted, "in a technical sense, it is not before us." In reversing, the court declared:

> Ordinarily, of course, a party should not be allowed to change the theory of his case after trial, but when fundamental rights are involved appellate consideration is appropriate, despite inconsistency in the appellant's position. The right to a jury trial and our traditional faith in the jury's capacity to resolve factual disputes is basic to our Federal system of judicial administration. [Footnotes omitted.]

Although not involving constitutional issues, another case deserves mention. In *Green* v. *Brown*, 398 F. 2d 1006 (1968), involving an alleged violation of the Investment Company Act of 1940 (15 U.S.C. 80a), defendants-appellees argued that plaintiff-appellant was foreclosed from raising the point of an alleged violation of section 21 of the act because it was not mentioned below. The Second Circuit referred to an earlier opinion in which it said "the rule that an order will not be reversed upon a point first raised upon appeal is not absolute, in spite of our unconditional statement to the contrary," and added:

> While we would not ordinarily be receptive to attempts to litigate issues not raised in the trial court, this appears to be a case calling for relaxation of the usual rule, since the issues now raised are of great significance in construing an act designed to protect thousands of investors. [Footnote omitted.]

[3] We recognize that a policy followed by the Supreme Court and intermediate appellate courts may not necessarily apply to the trial courts. However, in *Aronoff Galleries, Inc.* v. *United States*, *supra*, the Customs Court obviously looked to the Supreme Court for guidance in deciding to not consider a constitutional question raised for the first time in a posttrial brief. Subsequent Supreme Court and circuit court cases reviewed above are persuasive that, in the circumstances of this case, the Court of International Trade should have considered appellant's argument on the fifth amendment due process issue. This argument is, quite simply, that the provision in 19 U.S.C. 160(a), that the Commission shall be deemed to have made an affirmative determination (of injury) if the Commissioners voting are evenly divided on the question, is facially unconstitutional in that due process requires a majority to make such a determination. We do not regard such an argument as frivolous; the fifth amendment due process right is involved—one of far greater moment than that which persuaded this court to relax its usual practice in *City Lumber Co.* v. *United States*, *supra*; the Government was given 60 days to file a reply brief, so there would have been no prejudice from consideration of the issue; no refinement or clarification is required; and the matter was ripe for consideration by the Court of International Trade.[8]

[4] Although it would be proper to remand this case to the court below for its determination on the fifth amendment due process issue, its decision would in all likelihood be appealed. Accordingly, we are persuaded that this court should decide the matter now in the interests of judicial economy and avoidance of any further delay in a case that the trial court described as one with a "14-year lifespan."

Appellant argues that "the Congress of the United States had not the legal authority or the power to confer upon the commission the right to make an affirmative determination based on an evenly divided vote," and that imposition of dumping duties by an evenly divided vote of the Commission constituted taking of property without due process of law.[9] It declares that enactment of the tie vote provision in 19 U.S.C. 160(a) "was a direct violation of the rights of the appellant and all other citizens of the United States secured for them under the constitution [sic] of the United States." It correctly points out that "the power of Congress in not absolute and without limit,"

---

[8] The impact of the tie vote provision is clearly substantial. Appellee has called to the court's attention 30 instances of tie votes of the Commission arising out of investigations under the Antidumping Act.

[9] According to the Government, there has been no liquidation and, therefore, no dumping duty assessment and, thus, there has been no "taking of property." Moreover, appellant apparently overlooks that the regulatory scheme provided by Congress requires, first, a less-than-fair-value determination by the Secretary of the Treasury. See *Timken Co.* v. *Simon*, 530 F. 2d 221 (CA D.C. 1976).

quoting from *Murray's Lessee* v. *Hoboken Land & Improvement Co.*, 59 U.S. (18 How.) 272, 276 (1856) that Congress is not "free to make any process 'due process of law,' by its mere will." It concedes that "the constitution [sic] of the United States contains no requirement of majority rule," but contends that "the requirement of majority rule is well settled in the usages and the modes of proceeding of the English-speaking peoples" and that "the requirement of majority rule in all deliberative or representative bodies is inherent in the notion of due process of law and the law of the land." Appellant gratuitously asserts that "the legal vacuum around the concept of majority rule permits the inference * * * that the rule is never abrogated."

Appellant further argues that a quorum is a condition precedent to doing business and that when this condition is fulfilled, "the operative rule then becomes that of majority vote." Thus, it theorizes that "in the function of a legislative body or commission the function of majority rule is a higher order or represents a greater value than the function of a quorum." From this it postulates that "if a quorum is a notion of constitutional proportion in our democratic scheme of things, then it necessarily follows that the concept of majority rule is of more than constitutional proportion * * * among that order of things which are inherent in the concept of ordered liberty."

[5] With respect to the last proposition, the short and complete answer is that it is beyond the scope of both appellant's fifth amendment due process argument and the question of whether the Court of International Trade should have considered that argument.

With respect to the remainder of appellant's arguments, appellant's main problem is that it identifies "our democratic scheme of things" with majority rule; whereas, it is apparent from the Constitution itself, on which appellant's due process argument is based, that majority rule is not an immutable ingredient in "our democratic scheme of things." The U.S. Senate itself, composed of two senators from each of the States,[10] is the most notable exception to majority rule in "our democratic scheme of things." The electoral college, composed of the number of electors equal to the number of Senators and Representatives from each State [11] is another. If election of the President should go to the House of Representatives, each State is entitled to but a single vote.[12] Of course, there are good reasons for such exceptions to majority rule in a republic.[13]

[6] Similarly, legislative history of the tie vote provision of 19 U.S.C.

[10] U.S. Constitution, art. 1, § 3, cl. 1; amendment XVII.
[11] U.S. Constitution, art. 2, § 1, cl. 2; amendment XII.
[12] Id.
[13] Mr. Justice Harlan, in his separate opinion in *Whitcomb* v. *Chavis*, 403 U.S. 124, 167 (1971), referred to "the fact that the scheme of the Constitution is one not of majoritarian democracy, but of Federal republics, with equality of representation a value subordinate to many others, as both the body of the Constitution and the 14th amendment itself show on their face."

160(a) compels the conclusion that it was enacted for good and sufficient reasons.[14] *Exxon Corp.* v. *Governor of Maryland*, 437 U.S. 117, 125 (1978). In his message to Congress in 1916, President Wilson suggested the creation of an investigative commission that would be free from favoritism toward any political party and capable of objectively considering the economic conditions of the country.[15] Congress responded in the Act to Increase the Revenue (Public Law No. 271, 39 Stat. 756, 795–98). Section 700 provided that no more than three of of the six members, to be appointed by the President, could be from the same political party. In 1958, Congress enacted Public Law No. 85–630 (72 Stat. 583), which added a provision to section 201(a) of the Antidumping Act stating that, for the purpose of that section, the Commission shall be deemed to have made an affirmative determination if the commissioners voting are evenly divided on the question. The Trade Act of 1974 (Public Law No. 93–618, 88 Stat. 1978, 2050) added a tie vote provision to the countervailing duty law in connection with a newly added injury determination provision. The Trade Agreements Act of 1979 (Public Law No. 96–39, 92 Stat. 144, 179) incorporated a tie vote provision in the new antidumping and countervailing duty laws. Thus, Congress has clearly recognized the possibility of a deadlock resulting from the provision for an equal number of commissioners from each major political party,[16] and the tie vote provision has been one answer to that problem.[17] In the case of the Antidumping Act, enacted for the benefit of U.S. manufacturers, the stated purpose of the tie vote provision was to provide additional deterrent strength to the law and greater certainty, speed, and efficiency in its enforcement.[18]

Accordingly, we hold that the tie vote provision of 19 U.S.C. 160(a) does not violate the due process clause of the fifth amendment to the Constitution.[19]

---

[14] Appellant concedes that Congress has plenary power to regulate foreign commerce. *Buttfield* v. *Stranahan*, 192 U.S. 470, 492–93 (1904). However, it contends that there is no rational relationship between the tie vote provision and the end sought by the legislation, citing *United States* v. *Carolene Products Co.*, 304 U.S. 144 (1938). We do not agree for reasons that follow. Additionally, appellant has failed to make manifest that the tie vote provision violates the requirement of procedural due process because the hearing, while "at a meaningful time," was not "in a meaningful manner." *Mathews* v. *Eldridge*, 424 U.S. 319, 333 (1976).

[15] J. Dobson, Two Centuries of Tariffs: The Background and Emergence of the U.S. International Trade Commission 87 (1976).

[16] See Senate Committee on Governmental Affairs, Study on Federal Regulation, vol. IV, Delay in the Regulatory Process, 95th Cong., 1st sess. 116 (1977).

[17] Another answer, as in 19 U.S.C. 1330(d)(1), is that in the case of a tie vote on the question under 19 U.S.C. 2251 of serious injury, or threat thereof, from increased imports or on the question under 19 U.S.C. 2436 of market disruption, the determination agreed upon by either side may be considered by the President to be the determination of the Commission;

[18] S. Rept. No. 1619, 85th Cong., 2d sess. 2 reprinted in [1958] United States Code Cong. & Ad. News 3498, 3499. We note that appellant, in effect, argues that in this case a majority of 4–2 should have been required to make the injury determination. Such a two-thirds majority requirement could hardly be said to add deterrent strength, certainty, speed, and efficiency in enforcement of the antidumping law.

[19] In *Voss Int'l Corp* v. *United States*, —— CCPA ——, C.A.D. 1253, 628 F. 2d 1328 (1980), this court held that a valid affirmative determination of injury for purposes of 19 U.S.C. 160(a) resulted from an evenly divided vote in a quorum of four members of the Commission voting, with a fifth member present but abstaining. The constitutionality of the tie vote provision was neither raised nor considered.

The judgment of the Court of International Trade dismissing appellant's action is *affirmed*.

RICH, J., concurring.

I agree with the result reached by the majority and with its discussion of the impetus behind congressional enactment of the tie-vote provision of 19 U.S.C. 160(a). I wish, however, to focus more specifically on the reasons why I believe the trial court should have ruled upon an issue raised for the first time in a post-trial brief, and on the reasons I vote to affirm on the due process, fifth amendment issue.

THE POST-TRIAL BRIEF ISSUE

Like the majority, I agree that "appellant's fifth amendment due process claims set forth in paragraphs 16 and 17 [of the complaint] are addressed only to evidentiary considerations and that the matters discussed for the first time in appellant's brief are wholly outside the pleadings." In deciding that the trial court should, nevertheless, have considered appellant's due process issue, the majority cites and discusses a number of U.S. Supreme Court and Federal circuit courts of appeals cases. Each of these cases involved, however, the question of whether or not a circuit court or the Supreme Court would hear an issue that had been raised for the first time on appeal.

I do not believe that we should indicate to the trial court that it should have heard an issue raised for the first time in a post-trial brief before it because this court or a Federal circuit court of appeals might have considered it, had it been raised for the first time at the appellate level.

I believe the trial court should have considered the due process issue only for the limited reasons set forth in that part of the majority opinion just preceding footnote 8, stating that "the Government was given 60 days to file a reply brief, so there would have been no prejudice from consideration of the argument; no refinement or clarification is required; and the matter was ripe for consideration by the Court of International Trade." As further support for the no refinement rationale, I note that the constitutionality of this statute is to be determined on its face, not as interpreted or as applied, and that no further facts needed to be developed.

THE CONSTITUTIONAL ISSUES

Although appellant asserts that majority rule is "Necessarily * * * among that order of things we call 'fundamental'," it is my belief that the economic legislation before us, enacted pursuant to the Federal Government's plenary power over regulation of foreign commerce, infringes no such right and is to be held invalid as violative of the due process clause of the fifth amendment only if it is wholly

arbitrary or capricious. I would affirm in this case, given the congressional motivation discussed by the majority, simply because appellant has failed to demonstrate that the tie-vote provision of section 160(a) bears no reasonable relationship to, or has no rational basis in, the legitimate end sought by Congress. *Exxon Corp.* v. *Governor of Maryland*, 437 U.S. 117, 125 (1978); *United States* v. *Carolene Products Co.*, 304 U.S. 144, 152, 153 (1938).

United States Court of International Trade

One Federal Plaza
New York, N.Y. 10007

Chief Judge

Edward D. Re

Judges

Paul P. Rao
Morgan Ford
Scovel Richardson
Frederick Landis
James L. Watson
Herbert N. Maletz
Bernard Newman
Nils A. Boe

Senior Judge

Samuel M. Rosenstein

Clerk

Joseph E. Lombardi

Decisions of the United States Court of International Trade

(Slip Op. 81–29)

C. ITOH & CO. AMERICA, INC., PLAINTIFF, *v.* UNITED STATES, DEFENDANT

Before RAO, Judge.

Court No. 77–2–00271

FABRIC IN IMITATION OF SUEDE

FABRIC OF MANMADE FIBERS.

The subject merchandise of manmade fibers, consisting of polyester fibers which have been coated or filled with a polyurethane solution and other chemicals, is properly classifiable as

a fabric of manmade fibers, nonwoven, rather than as an article of plastic, other, as claimed by plaintiff. The "Ecsaine" or "Ultrasuede" is regarded in the trade as a fabric and not as a plastic, and classification in schedule 3 is proper.

[Judgment for defendant.]

(Decided April 7, 1981)

Barnes, Richardson & Colburn (*James S. O'Kelly* at the trial; *Jack D. Mlawski* with him on the briefs) for the plaintiff.

Thomas S. Martin, Acting Assistant Attorney General; *Joseph I. Liebman*, Attorney in Charge, International Trade Field Office, Commercial Litigation Branch (*John J. Mahon* at the trial and on the briefs) for the defendant.

RAO, Judge: The issue presented in this case is the proper classification of merchandise invoiced as "XL 223 Manmade Plastic Leather Cloth" manufactured in Japan by Toray Industries, Inc., exported from Japan on October 20, 1975, and entered on November 7, 1975 at the port of Wilmington, Del. The merchandise is also known as "Ecsaine" and is widely known in the trade as "Ultrasuede."

The merchandise was classified under the following provision of the Tariff Schedules of the United States:

	Webs, wadding, batting and nonwoven fabrics, including felts and bonded fabrics, and articles not specially provided for of any one or combination of these products, all of the foregoing of textile materials, whether or not coated or filled:	
	* * * * *	
355.25	Of manmade fibers	12¢ per lb. +15% ad val.

and is claimed classifiable under:

	Articles not specially provided for, of rubber or plastics:	
	* * * * *	
774.60	Other	8.5% ad val.

or, alternatively, under:

	Textile fabrics, including laminated fabrics, not specially provided for:	
	* * * * *	
359.60	Other	8.5% ad val.

It is plaintiff's claim that the merchandise is of plastics, in that the component material in chief value of the merchandise is plastics, and that, by virtue of General Interpretative Rule 10(f), the cost of the

plastics component must be compared to that of the fiber component to determine the material in chief value of the imported merchandise.[1]

Plaintiff called one witness at the trial and introduced five exhibits. The witness, Mr. Masao Ijiri, is the production manager for Ecsaine for Toray Industries in Japan and has held this position for approximately 5 years. He described the method by which the merchandise is produced as involving five steps. A 0.1 denier polyester fiber yarn is produced by another branch of Toray Industries and it is coated with a polystyrene before delivery to the Ecsaine factory. By needle-punching, the yarns are formed into an entangled fiber sheet which is then dipped into a special plastic resin solution.[2] The plastic resin penetrates the fiber sheet but does not alter the composition of the polyester fibers. The polystyrene is then extracted from the fiber sheet by use of a special solvent, leaving the polyester fiber and the plastic resin. Next the fiber sheet is dipped into a urethane solution obtained by adding unspecified chemicals and solvent to a polyurethane solution, with the result that three materials are present in the fiber sheet: polyurethane, polyester, and plastic resin. The fiber sheet is then split horizontally. buffed to raise a nap which resembles suede, and dyed. It is produced and exported in pieces ranging in measurement from 45 inches wide by 16.8, 21.8, 32.8 to 38.2 yards in length and is also identified on the invoices by weight.

A visual and tactile examination of the sample of the merchandise, plaintiff's exhibit No. 1, shows it to be flexible, soft and resistant to creasing, wrinkling, and abrasion.

The polyester component of the Ecsaine was not within the knowledge of the witness, as it was furnished by another division of Toray Industries, Inc. That it is a manmade fiber is beyond dispute, since the raw material for polyester is oil.[3] The materials with which the polyester fiber are coated are conceded to be plastics, although some unnamed chemicals are also involved.

However, it is not clear to this court that the cost of the plastics components submitted by plaintiff (plaintiff's exhibit No. 5) is substantiated by the testimony at trial. Mr. Ijiri testified that the polyurethane to which the fiber sheet was joined constituted approximately 12 to 14 percent of the polyurethane mixture in which the fiber sheet is dipped (R. 63). The other 86 or 88 percent consists of an unidentified solvent and other unidentified chemicals (R. 64). It is

[1] 10. *General Interpretative Rules.* For the purposes of these schedules—

* * * * * * *

(f) an article is in chief value of a material if such material exceeds in value each other single component of the article; * * *

[2] The identity of the plastic resin was not disclosed at the trial.

[3] See Moncrieff, *Man-Made Fibres*, Wiley Interscience Division, John Wiley & Sons, Inc., New York, 1970, p. 402.

unclear whether the cost figures submitted by plaintiff reflect this percentage in the allocations for raw materials and chemicals made at the polyurethane/sheet joinder stage, and the witness testified that he could not recall the cost of polyurethane in 1975, the year in which the merchandise was imported (R. 64), or the cost of the solvent (R. 65). No other evidence was adduced with respect to the correctness of the figures that were submitted in plaintiff's exhibit No. 5.

The defendant raised the issue of whether the cost of the plastic resin should be allocated to the cost of the polyester fiber component rather than to the plastics material, since it is part of the cost involved in the preparation of the polyester fiber sheet for joinder with the polyurethane mixture. It also claimed that the cost of the plastics bonding or coating components should be disregarded in determining the component fiber in chief value of the merchandise, pursuant to headnote 4(b) to schedule 3.[4]

I

The issue basic to a determination of the proper classification of the imported merchandise is whether it is a nonwoven fabric of manmade fibers or should be considered articles of plastics for tariff schedule purposes. If it is a nonwoven fabric of manmade fibers, it is classifiable as a fabric as Congress has evidenced an intent that all fabrics have been provided for in schedule 3, except for those specifically provided for elsewhere in the tariff schedules. The Tariff Classification Study, Explanatory and Background Materials, 1960, at page 4 of the volume covering schedule 3, states:

> Schedule 3 is an orderly, systematic presentation of most of the provisions which would cover importations of textile products. The proposed provisions are full and complete and take into account technological progress in the textile industry, which, perhaps, has been most strikingly exhibited in the manmade fiber laboratories and production plants.
>
> * * * * * * *
>
> [P]arts 3 and 4 cover all textile fabrics in the piece and, in addition, a few special classes of articles; * * *

The evidence adduced at trial was limited to information concerning the costs of the components which are used in the manufacture of the Ecsaine. The court can consult scientific authorities and other reliable sources of information as an aid in determining the denomination of imported merchandise in the trade. *Transatlantic Company* v. *United States*, 60 CCPA 100, C.A.D. 1088, 471 F. 2d 1397 (1973); *Nylos Trading Company* v. *United States*, 37 CCPA 71, C.A.D. 422

[4] Headnote 4(b) to schedule 3 provides that "in determining the component fibers of chief value in coated or filled, or laminated, fabrics and articles wholly or in part thereof, the coating or filling, or the nontextile laminating substances, shall be disregarded in the absence of context to the contrary."

(1949). The manner in which merchandise is regarded in the trade is pertinent in deciding its proper classification.

In an article in Women's Wear Daily (a daily periodical which the court takes judicial notice to be a recognized authority on the fashion industry in this country), July 20, 1976, "Suedelike flood: The fake fakes," Caroline Bernstein consistently refers to "Ultrasuede" as a fabric that is being imitated by other "suedelike synthetic fabrics" and describes it as "a nonwoven fabric of 60 percent polyester and 40 percent nonfibrous polyurethane." In this article, "Ultrasuede" is listed with other synthetic suedes, which vary from 100 percent polyester to polyester and rayon blends, all of which are considered fabrics.

In another article, "Ultra Demand for Versatile Ultrasuede," Dee Wedemeyer, New York Times, February 26, 1977, Ultrasuede is repeatedly referred to as a fabric, and is described as "60 percent polyester and 40 percent polyurethane * * * pressed or packed, somewhat like felt is, not woven," and is referred to as "[t]he Rolls-Royce of the fabric industry" by a vice president of the American distributor and owner of the registered trademark for the fabric. A New York sales agent for several suede and leather tanners is quoted in this article as referring to "Ultrasuede" as being capable of machine washing and tumble drying, or being dry cleanable with standard methods which are less expensive than suede dry cleaning. Bill Blass, the nationally known designer, is quoted as having "a standing order on hand for the fabric all the time."

Additionally, in The Trade, December-January 1976, page 18, in an article titled "The Psuedo-suedes," "Ultrasuede" is listed as a "fabric, 100 percent polyurethane coated, nonwoven, 45", weight—mid," among other fabrics which simulate suede; and in Trade Names Dictionary, edited by Ellen T. Crowley, Gale Research Co., Detroit, Mich., 1979, page 837, volume 2, "Ultrasuede" is listed as a fabric.

Thus, it can be concluded that "Ultrasuede" or "Ecsaine" is considered to be a fabric in the fashion industry, in which it is used to manufacture both women's and men's high fashion garments by leading designers in this country. Indeed, plaintiff refers to the merchandise as a fabric on page 6 of its brief in stating that "[i]n the seventh and eighth stages the fabric is split, buffed, and dyed,"

Having concluded that the merchandise is a fabric for tariff schedule purposes, it is necessary to determine whether it is "of textile materials" and "of manmade fibers." Textile materials are defined in schedule 3, headnote 2(a)(1) as being the fibers (cotton, other vegetable fibers, wool and hair, silk, and manmade fibers) provided for in part 1 of schedule 3; fibers are defined in part 1, subpart E, headnote 3(f) as including filaments and strips in noncontinuous form, and any other fibrous structure suitable for the manufacture of textiles. There can be

no doubt that the polyester fibers that are needle-punched into the felt sheet that is joined with the polyurethane solution are textile fibers, and therefore textile materials.

The polyurethane component of the imported merchandise is also a textile material. In the Encyclopedia of Textiles (second edition), Prentice Hall, Inc. (1972), page 391, the word "polyurethane" is listed as synonymous with the word "urethane" which is defined as:

> *Urethane.* A chemical family of cross-linked polymers subject to reactions which cause foaming. The foams are used for bonding and laminating fabrics. The term has gradually replaced the term polyurethane.

Moncrieff, supra at note 3, identifies a fiber (Perlon U) made entirely of polyurethane and states that modern spandex fibers are polyurethanes. See page 442.

Plaintiff relies on *Canadian Vinyl Industries, Inc.* v. *United States*, 76 Cust. Ct. 1, C.D. 4626, 408 F. Supp. 1377 (1976), *aff'd*, 64 CCPA 97, C.A.D. 1189, 555 F. 2d 806 (1977) for the proposition that the correct classification of the merchandise hinges on whether it is of plastics which for tariff schedule purposes involves a determination of component material in chief value for the merchandise. *Canadian Vinyl* involved the issue of whether flexible sheets of nylon fabric laminated with a polyurethane skin were properly classifiable under item 771.40 as flexible sheets made in imitation of patent leather. The court considered that the merchandise was almost wholly of plastics (not the issue presently before us) and that it was the plastics material that imparted the essential character to the merchandise, and not the nylon fabric backing. In determining whether an article is "of" rather than "almost wholly of" a material, it is only the component in chief value which is considered, and not the component which imparts the essential characteristic to the merchandise. In *Canadian Vinyl*, the court considered whether the merchandise was classifiable under a specific provision in schedule 7, and properly concluded that since there was a specific provision in schedule 7 for the merchandise, it was precluded from classification under schedule 3, following the dictates of headnote 1(vii) to part 4C of schedule 3 which provides that the subpart does not cover other articles specially provided for in schedule 7 or elsewhere. The Ultrasuede or Ecsaine not specially provided for in schedule 7 as item No. 774.60, under which plaintiff claims is not a specific provision, but merely a basket provision for articles not specially provided for, of rubber or plastics.

Some significance must also be given to the manner in which the "Ecsaine" or "Ultrasuede" is imported. It is described on the commercial invoices as a manmade plastic leather cloth. It is imported in 45-inch widths and is measured lengthwise in yards, both being measure-

ments more commonly used in the fabric industry than in the leather industry.

II

Even if this court were to find that the merchandise is not a fabric for tariff schedule purposes, the presumptively correct classification by Customs should stand. The plaintiff is required to prove, in order to prevail, that the cost of the plastics exceeds that of any other component in the merchandise. The testimony of the witness, Mr. Ijiri, with respect to the costs of the various components was less than clear, even allowing for the difficulties of translating both questions and answers from the Japanese language. In one portion of his testimony (R. 26) he stated that the cost of the "Ecsaine" was—yen [confidential data excluded from publication] per meter and that the cost of the polyester component is about—yen [confidential data excluded from publication] per meter. This would make the polyester fiber the component material in chief value of the imported merchandise. He also stated that he was unfamiliar with or could not remember how the price of the fiber component of the "Ecsaine" was arrived at (R. 42–43).

In *Canadian Vinyl, supra*, this court, in determining how the cost of the various components is to be arrived at, stated (76 Cust. Ct. at 62):

> Plaintiff disproved the correctness of the classification by showing that the importation was not wholly or in chief value of the nylon textile material which, under general headnote 9(f)(i), would be a necessary prelude to classifying this importation as "of" textile material. In fact, plaintiff proved that at the time the components of this material were ready to be joined together (*which is the appropriate time to determine their relative value*) the cost of the nylon portion was approximately 51 cents per yard and the cost of the polyurethane portion was approximately $1.13 per yard. [Footnote omitted; *italic* added.]

Accordingly, in determining the value oft he fibers, as compared to the value of the polyurethane, we must determine the cost of preparing the fibers for the joinder. We find that the costs of all the steps up to the joinder of the polyurethane with the fiber sheet, exclusive of the cost of the polyurethane, are attributable to the fiber component, and that these costs exceed the cost of the polyurethane.[5] This is especially true since the cost breakdown provided by plaintiff for the polyurethane included the cost of chemicals and solvents, which were not identified in the testimony. We cannot accede to plaintiff's claim that the cost of the resin should be attributed to the plastics material since the resin was not identified by the witness, despite the fact that he was

[5] Based on the figures provided by plaintiff, we find the cost of the fiber component to be—yen per meter and the cost of the polyurethane component to be approximately—yen per meter [these figures are confidential data excluded from publication].

specifically asked what resin is used in the manufacture of the merchandise (R. 57). In view of these considerations and of the fact that the witness did not possess personal knowledge of the costs of some of the components as compared with others, plaintiff has not proved that the cost of the plastics material exceeds that of the fiber component, or for that matter, that of any of the chemicals or solvents that are used in the manufacturing process.

III

We consider next plaintiff's alternative claim that the involved merchandise, if not classifiable as articles of plastics, is properly classifiable under item 359.60 as a textile fabric, not specially provided for, inasmuch as the merchandise is of plastics, and there is no specific provision in schedule 3 for textile materials of plastics.

In pressing its alternative claim under item 359.60, plaintiff concedes that the merchandise is a textile fabric. If it is also a nonwoven fabric of manmade fibers, it must, a fortiori, be classified under item 355.25 by reason of General Interpretative Rule 10(c) since that item contains more difficult requirements to satisfy than item 359.60.

In determining whether a textile fabric is of a particular type of fiber, or in chief value of a particular fiber, the coating or filling, or the nontextile laminating substances, are to be disregarded in the absence of context to the contrary, according to headnote 4(b) to schedule 3. Disregarding, therefore, the polyurethane and the resin with which the polyester fibers are coated or covered, the value of the polyester fibers exceeds the value of any other component in the merchandise, if indeed there is any (see plaintiff's exhibit No. 5), except for the dye, which is not in dispute.

The merchandise also falls within the definition of "nonwoven fabrics" contained in schedule 3, part 4, subpart C, headnote 2(b) which defines that term to include "fabrics made of matted textile fibers, which are not in the form of yarns, but includes needle-punched felts comprised of fibers punched through a base fabric * * *."

Additionally, the superior heading to item 355.25 renders the value of the plastics material irrelevant. The merchandise is concededly of manmade fibers, disregarding the polyurethane and other fillers, and was properly classified under item 355.25.

Conclusion

This court concludes that the "Ecsaine" or "Ultrasuede" is a nonwoven textile fabric of manmade fibers for purposes of tariff classification and the presumptively correct classification under item 355.25 should

be confirmed as correct. Plaintiff's claimed classification under item 774.60 dismissed, as is its alternative claim under item 359.60.

Let judgment be entered accordingly.

(Slip Op. 81–30)

OXFORD INDUSTRIES, PLAINTIFF *v.* UNITED STATES, DEFENDANT

COURT No. 78–3–00389

Before RICHARDSON, Judge

WEARING APPAREL (MEN'S SHIRTS)

ASSEMBLED ARTICLES—FABRICATED COMPONENTS—INCIDENTAL OPERATIONS

Precut fabric components of men's shirts were manufactured in and exported from the United States to Mexico for assembly into finished garments. In Mexico, in addition to sewing the components together, some of the components were subjected to buttonholing operations which the Customs service determined were "fabrication" or "manufacturing" operations that advanced the value or improved the condition of the components. The importer contended that the buttonholing operations were assembly operations or operations incidental to assembly which did not disqualify the affected components from receiving the duty exemption accorded under TSUS item 807.00.

HELD

After buttonholing, according to the evidence, the disputed components are physically identifiable in the finished shirts, have not been changed in shape, form, or otherwise, and have not been advanced in value or improved in condition except by operations incidental to assembly. *Rudolph Miles* v. *United States*, 65 CCPA 32, C.A.D. 1202, 567 F. 2d 979 (1978) and *Mast Industries, Inc.* v. *United States*, 1 CIT——, Slip Op. 81–21 (Mar. 6, 1981) followed.

[Judgment for plaintiff.]

(Decided April 8, 1981)

George R. Tuttle, A Professional Corporation (*George R. Tuttle* and *Stephen S. Spraitzar* at the trial; *Stephen S. Spraitzar* on the briefs) for the plaintiff.

Thomas S. Martin, Acting Assistant Attorney General; *Joseph I. Liebman*, Attorney in Charge, International Trade Field Office, Commercial Litigation Branch (*Susan C. Cassell* at the trial; *Saul Davis* on the brief), for the defendant.

RICHARDSON, Judge: The merchandise in this case consists of one dozen long sleeve men's shirts (style 318) and one dozen short sleeve

men's shirts (style 129) which were exported from Mexico, entered at Douglas, Ariz., and classified in liquidation under TSUS item 380.84 as other men's or boy's wearing apparel, not ornamented; not knit, at the duty rate determined in accordance with TSUS item 807.00. It is claimed by plaintiff that allowances in duty in accordance with item 807.00 should have been made for the collar band body and lining components and cuff body and lining components of the style 318 shirts, and for the collar band body and lining compoents of the style 129 shirts. The customs service had disallowed item 807.00 treatment for these components because they were subjected to a buttonholing operation in Mexico.

Item 807.00 provides for a duty upon the full value of the imported article, less the cost or value of such products of the United States of—

> Articles assembled abroad in whole or in part of fabricated components, the product of the United States, which (a)were exported in condition ready for assembly without further fabrication, (b) have not lost their physical identity in such articles by change in form, shape, or otherwise, and (c) have not been advanced in value or improved in condition abroad except by being assembled and except by operations incidental to the assembly process such as cleaning, lubricating, and painting.

The record shows that the fabric and lining components in issue were cut to shape at the Woods Co. in Douglas where, along with other components of the shirts not in issue, they were exported to Camisas Bahia Kino ("Kino") in Mexico across the border from Douglas for purposes of being assembled into shirts. Woods and Kino were at that time wholly owned subsidiaries of the plaintiff corporation.

Of the eight witnesses who testified at the trial on plaintiff's behalf, three gave testimony relative to the making of the shirts in issue. Margot Ramos testified that she was product development manager for Manchester Shirts [one of plaintiff's subsidiaries] at Compton, Calif., since June 1974. She stated that during the period when these shirts were made in Kino she was in charge of the original patterns applicable to the shirts in isssue. She said she made the original patterns listed on exhibit 2–A—the "make detail sheet" for the short sleeve shirt, and has made patterns for shirts similar to those in issue. The witness stated that she examined the imported merchandise. She testified to details of measurements she made of the buttonhole lengths.

James D. Faulkner testified that he was group manufacturing manager with plaintiff since January 1976, and also was supervisor of men's wear operations in Kino. He testified that at the time the

shirts in issue were made he was the general manager for the Woods Co., and made daily visits to Kino. He said that his responsibilities included the training of personnel on the use of buttonholing machines, including the Reece S–2 buttonholer, and also the sewing of buttons on shirts.

Mr. Faulkner testified that after being cut in the United States the components in issue were bundled with an incentive ticket that has a sequential number for matching. These bundles were then shipped to Kino, and no work was performed on the components prior to entering the sewing operations.

Mr. Faulkner stated that after arrival at the Kino plant the bundles were placed in a storage rack, that when it came time to use them they were taken to the operators for the first sewing operation. He said that the Reece S–2 machine was used to make the buttonholes, and described the buttonholing operation. He stated that the machine sews the stitching around the buttonhole, and then automatically slits the material between the stitching with a knife in one continuous operation.

The witness also testified that the machine operator did not exercise any independent judgment relative to placement of buttonholes. He stated that he did not consider buttonholing to be an improvement in the condition of the shirt, but merely a necessary step in the completion of the garment.

Dale Drost, former head mechanic at plaintiff's Douglas plant, described the operation of the Reece S–2 machine. He said the Reece S–2 makes wide stitch rows, forms bars on each end of the buttonhole which are bold looking, and uses single thread chain stitch. According to the witness, the machine operates automatically when activated. It is activated by pushing a pedal which activates the sewing cycle that forms the stitching of the buttonhole. The first row of stitches is formed, and the first bar, then the machine is reversed to make the second row of stitches, and the second bar, after which the chopper knife automatically comes down to slit in between the two rows of stitches.

Mr. Drost stated that the Reece S–2 is a high-speed machine which does not remove any fabric. He characterized it as a "sewing machine," and said that it can be modified to perform other operations.

It was brought out in testimony of other witnesses called on plaintiff's behalf that the Reece S–2 machine is similarly used in other segments of the apparel industry. And, in this connection, although not involved in the making of shirts, the testimony of Robert Suszycki, the El Paso/Juarez area manager for White Stag, is illuminating. With respect to the relationship of buttonholing to other aspects of producing a garment, the witness testified (R. 418):

Q. In your opinion, is buttonholing a minor operation compared with other operations involved in producing a garment?
A. Stylistically, it is insignificant. Functionally, it is important. As a cost item, it is not important.
Q. Would you please explain that?
A. Well, in our particular products, if you compare the direct labor cost or whatever comparison you would like to draw, it is one of the cheapest, fastest, most automatic operation we have.

The garment to which the witness' testimony has reference was White Stag's basic slacks, style 44130, which was received in evidence as exhibit 31. Mr. Suszycki stated that the slacks were buttonholed either in El Paso or in Juarez. He said that the components joined together by the buttonholing was the waistband, which is in two pieces, and a fusible lining which is the third piece. And he pointed out that the buttonhole is added during the sewing operation.

This view of the witness Suszycki as to the minor nature of buttonholing was corroborated in the testimony of Samson Altman, director of manufacturing for Calvin Klein Jeans in El Paso, Tex., who was also called as a witness on plaintiff's behalf. Mr. Altman testified that buttonholing is a relatively minor operation compared with other operations involved in the assembly of garments. He stated that the time for buttonholing a collar band would be extremely fractional when compared with the stitching time for making a collar band.

Albert A. Dodds, an independent shirt consultant called as a witness on defendant's behalf, testified that while the cutting of the fabric (in the United States) with a knife or clicker was fabrication, the components (as exported from the United States) were not fabricated components because they were not then completed, lacking as they did the buttonholes. He characterized the addition of the buttonholes as creating a new element in the components which he regarded as being a manufacturing operation.

Mr. Dodds also testified that the length of time necessary to slit a buttonhole with the Reece S–2 machine which he considered to be a sewing machine was approximately the same amount of time it took to cut the thread. And he said that the sewing of the buttonhole normally takes place in the sewing room of the shirt factory after the cuffs are made.

Plaintiff contends that the facts of record demonstrate that the components in issue met the requirements of item 807.00. Plaintiff argues (brief, p. 71), "The record herein clearly presents evidence that buttonholing does not substantially transform the buttonholed components, but is a minor or incidental operation." Defendant contends that the subject components are not entitled to item 807.00 treatment because they were subjected to further fabrication prior to assembly, and were advanced in value or improved in condition

by operations other than assembly operations or operations incidental to assembly.

Defendant argues that "not only did the buttonholing operations complete the components in issue while abroad, they had a commercial and utilitarian function well after assembly of the components into the shirts" (brief, p. 55). Defendant further argues that "the only assembly which occurred abroad was the joining or sewing of the seams or sewing the buttons onto the cuffs and collar bands" (brief, p. 77). And, in this connection, defendant goes on to argue, "Operations as essential as the buttonholing operations involved in this case could not possibly be considered to be of such a minor nature as to term it incidental, when, without those operations the assembly can be completed, but the article would not be accepted by the customer or ultimate consumer" (brief, p. 79).

In *Rudolph Miles* v. *United States*, 65 CCPA 32, C.A.D. 1202, 567 F. 2d 979 (1978), to which both parties call attention in the briefs, steel Z-beams were exported to Mexico where they were processed into floating center sills which were assembled into railroad boxcars that were imported into the United States. Item 807.00 treatment for the Z-beams was disallowed by the Customs Service by reason of the fact that holes and slots of varying dimensions had been burned into each beam during the processing in Mexico. The Customs Court upheld the Customs Service's determination, and held that the burning of holes and slots in the beams and other operations in Mexico constituted further fabrication within the meaning of clause (a) of item 807.00, and also advanced the value and improved the condition of the Z-beams within the meaning of clause (c) of item 807.00.

The court of appeals reversed the lower court's holding in *Miles*. The appellate court held that the processing of the Z-beams in Mexico, especially the burning of holes and slots, was concomitant with the assembly of center sills, and was not substantial enough to preclude qualification under clause (a) of item 807.00. The appeals court also concluded that the processing in Mexico was merely part of the assembly of the Z-beams into center sills, and "incidental to the assembly process" as provided in item 807.00(c). The court stated that all the operations in Mexico constituted assembly of the beams into center sills, and that if increase in value resulted from these Mexican activities, it was within the exception expressly provided in the statute for advance in value "by being assembled."

In *Mast Industries, Inc.* v. *United States*, 1 CIT ——, Slip Op. 81–21 (Mar. 6, 1981), precut fabric components of women's pants were exported from the United States to El Salvador where they were assembled into finished garments that were imported into the United States.

In El Salvador various fabric components of the pants were subjected to buttonholing (with a Reece S–2 machine) and pocket slitting operations. Upon entry into the United States the Customs service disallowed item 807.00 treatment for these components by reason of these operations, and the importer instituted action in this court challenging the Customs service' disallowance.

In *Mast* the court found that slitting the fabric for buttonholing and pocket insertion purposes, and the preliminary remedial sewing in the buttonhole area, were relatively minor procedures, and concluded that such operations were incidental to assembly of the pants, following *Rudolph Miles* v. *United States*, *supra*. Accordingly, the court held that *Mast* was entitled to item 807.00 treatment for the disputed components.

The facts in *Mast* and the arguments advanced in that case by the defendant parallel closely the facts and defendant's arguments in the instant case. In fact, so similar are the facts and arguments in the two cases, that the court is constrained to notice the inadvertent references by defendant's counsel on at least five occasions in the brief at bar when counsel referred to "pocket slitting" which was involved in the women's pants of *Mast*, while clearly intending to refer only to the men's shirts at bar (brief, pp. 62, 65, 67, 80, where there are two references), a point which did not go unnoticed by plaintiff's counsel (reply brief, p. 15). Consequently, the court agrees with plaintiff that the holdings in *Miles* and in *Mast* are dispositive of the issues at bar, and the court so holds. What the court said in *Mast* applies equally to the facts at bar, namely, "Said operations were not such substantial changes as to constitute further fabrication. No new portion of the [shirts] was made, and the cost of performing these operations, in terms of both labor and expense was a small portion of the total cost of assembly."

In view of the stipulations [1] of the parties, and admissions [2] made by the defendant, all of which are of record, nothing remains to be

[1] At the trial the parties stipulated:

For the short sleeve shirts and long sleeve shirts in exhibits 1–A and 1–B, the cost of adding the buttonholes is approximately equal to the cost of cutting the collar band components. * * * [F]or the long sleeve shirts, the cost of the four buttonholes in the two cuffs is slightly more than the cost of cutting six cuff components. * * * [F]or the short sleeve shirts and long sleeve shirts, the cost of adding the buttonholes to the sewn collar band is approximately 8 percent of the cost of the collar band component. * * * [O]n the long sleeve shirts, the cost of adding the four buttonholes to the two cuffs is approximately 11 percent of the cost of the six cuff components. [For each cuff, there are three components, the top and bottom components, and the lining.] [R. 174, 175.]

[T]he range of the standard allowed minutes per dozen of adding one buttonhole on a Reece S–2 buttonhole machine ranges from approximately a minute to a minute and a half. [R. 219.]

There is no specific requirement in sec. 10.11 through 10.26, 19 CFR, no Customs Service rulings or no practice in the Customs Service of requiring that components be exported abroad together in order for the components of the assembled articles to receive an exemption under item 807, provided that the other conditions of 807 are met. [R. 483.]

[2] For purposes of this action defendant admits:

12. The collar band shirt component, collar band lining components, cuff shirt components, and cuff lining components of the long-sleeved shirts did not lose their identity from the assembly process in Mexico by change in form, shape, or otherwise.

* * * * * * * *

27. The collar band shirt components and collar band lining components of the imported shrot sleeved shirts did not lose their identity from the assembly process in Mexico in change in form, chang [sic], or otherwise.

determined by the court. It follows, therefore, that plaintiff is entitled to the duty exemption accorded under item 807.00 for the disputed shirt components.

Judgment will be entered herein accordingly.

216-390 O - 81 - 2

Appeal to U.S. Court of Customs and Patent Appeals

APPEAL 81–13.—The United States *v.* Standard Surplus Sales, Inc.—Backpack—Parts of Backpack—Nylon Bags—Flat Goods—Sports Equipment—Parts of Article of Luggage—TSUS—Appeal from Slip Op. 81–5.

The merchandise in this case consists of various styles of nylon bags and similar merchandise used to make a backpack. The merchandise is assembled together with a frame and other parts and accessories to produce the finished backpack. It is not imported with a frame, and, therefore, is not a complete backpack.

When the merchandise was imported, it was classified by the District Director of Customs at Los Angeles, Calif., at 24 percent ad valorem as to merchandise entered during 1971 and at 20 percent ad valorem as to merchandise entered during 1972, under item 706.24 of the Tariff Schedules of the United States, "as modified by T.D. 68–9, as luggage * * * and flat goods: of textile materials whether or not ornamented: other: other." Plaintiff-appellee claims that the merchandise is properly dutiable at 12 percent ad valorem as to merchandise entered during 1971 and at 10 percent ad valorem as to merchandise entered during 1972 under item 735.20 of the Tariff Schedules of the United States, "as modified by T.D. 68–9, as * * * sport * * * equipment; all of the foregoing and parts thereof, not specifically provided for." Based upon the evidence submitted and the testimony given at the trial, the U.S. Court of International Trade rendered a decision and judgment for the plaintiff-appellee.

Defendant-appellant is dissatisfied with the decision and judgment of the U.S. Court of International Trade and respectfully prays, pursuant to sections 1451(a) and 2601 (a) and (b), title 28, United States Code, for a review of the questions involved therein, and to grant such relief in the premises as to the court shall seem just.

International Trade Commission Notices

Investigations by the U.S. International Trade Commission

DEPARTMENT OF THE TREASURY, APRIL 23, 1981

The appended notices relating to investigations by the U.S. International Trade Commission are published for the information of Customs Officers and others concerned.

R. E. CHASEN,
Commissioner of Customs.

In the Matter of CERTAIN WINDOW SHADES AND COMPONENTS THEREOF	Investigation No. 337–TA–83

Commission Schedule for Filing Written Submissions on the Presiding Officer's Recommendation; on Relief, Bonding, and the Public Interest; and for Requesting a Public Hearing

AGENCY: U.S. International Trade Commission.

ACTION: Request for written submissions regarding relief, bonding, and the public interest in Investigation No. 337–TA–83, Certain Window Shades and Components Thereof.

SUMMARY: Notice is hereby given that the presiding officer has issued a recommended determination that there is a violation of section 337 of the Tariff Act of 1930 (19 U.S.C. 1337), in the unauthorized importation into the United States and sale of certain window shades and components thereof that are the subject of the Commission's investigation. Accordingly, the recommended determination and the record of the hearing have been certified to the Commission for review and a Commission determination. No public hearing is presently scheduled in this matter.

Interested persons may obtain copies of the nonconfidential version of the presiding officer's recommendation (and all other public documents on the record of the investigation) by contacting the Office

of the Secretary, U.S. International Trade Commission, 701 E Street NW., room 161, Washington, D.C. 20436, telephone 202–523–0161.

Although no public hearing before the Commission is scheduled, requests for such a hearing will be considered by the Commission. If a public hearing is requested and the Commission grants that request, the hearing will be held on Thursday, April 30, 1981.

SUPPLEMENTARY INFORMATION:

WRITTEN PRESENTATIONS ON RELIEF, BONDING, AND THE PUBLIC INTEREST

If the Commission finds that a violation of section 337 has occurred, it may issue (1) an order which could result in the exclusion of the subject articles from entry into the United States and/or (2) an order which could result in one or more respondents being required to cease and desist from engaging in unfair methods of competition or unfair acts in the importation and sale of such articles. Accordingly, the Commission is interested in presentations which address the form of relief, if any, which should be ordered.

If the Commission finds that a violation of section 337 has occurred and orders some form of relief, the President has 60 days to approve or disapprove the Commission's action. During this period, the subject articles would be entitled to enter the United States under a bond in an amount determined by the Commission and prescribed by the Secretary of the Treasury. The Commission is therefore interested in hearing presentations concerning the amount of the bond, if any, which should be imposed.

If the Commission concludes that a violation of section 337 has occurred and contemplates some form of relief, it must consider the effect of that relief upon the public interest. The factors which the Commission will consider include the effect that an exclusion order and/or a cease and desist order would have upon (1) the public health and welfare, (2) competitive conditions in the U.S. economy, (3) the U.S. production of articles which are like or directly competitive with those which are the subject of the investigation, and (4) U.S. consumers.

Therefore, in order to give greater focus to the Commission's consideration of this investigation, the parties to the investigation, Government agencies, and the Commission investigative attorney are encouraged to file briefs on the issues of violation (to the extent they have not already briefed that issue in their written exceptions to the presiding officer's recommended determination), remedy, bonding, and the public interest. Briefs must be filed not later than the close of business on April 27, 1981.

REQUEST FOR HEARING

Written requests for a hearing before the Commission must be received by the Office of the Secretary no later than April 27, 1981. Any request for a hearing must state in detail the reason for such request, including the reasons why the issues in question cannot be addressed adequately by means of written submissions.

ADDITIONAL INFORMATION: The original copy and 11 true copies of all briefs must be filed with the Office of the Secretary not later than April 27, 1981. Any person desiring to discuss confidential information, or to submit a document (or a portion thereof) to the Commission in confidence, must request in camera treatment unless the information has already been granted such treatment by the presiding officer. All such requests should be directed to the Secretary to the Commission and must include a full statement of the reasons why the Commission should grant such treatment. Documents or arguments containing confidential information approved by the Commission for in camera treatment will be treated accordingly. All nonconfidential written submissions will be available for public inspection at the Secretary's Office.

FOR FURTHER INFORMATION CONTACT: Jack Simmons, Esq., Office of the General Counsel, U.S. International Trade Commission, telephone 202–523–0350.

By order of the Commission.

Issued: April 13, 1981.

KENNETH R. MASON,
Secretary.

SYNTHETIC L-METHIONINE FROM JAPAN

Notice of Commission Request for Comments Concerning Institution of Section 751(b) Review Investigation

AGENCY: U.S. International Trade Commission.

ACTION: Request for comments regarding institution of section 751 (b) review investigation concerning affirmative determination in Investigation No. AA1921–115, Synthetic Methionine From Japan.

SUMMARY: The Commission invites comments from the public on whether changed circumstances exist which warrant the institution of of an investigation pursuant to section 751(b) of the Tariff Act of 1930, Public Law No. 96–39, section 101, 93 Stat. 175–76 (to be codified at 19 U.S.C. 1675(b)), to review the Commission's affirmative determination in investigation No. AA1921–115 to synthetic l-methionine

from Japan. The purpose of the proposed section 751(b) review investigation, if instituted, would be to determine whether an industry in the United States would be materially injured, would be threatened with material injury, or the establishment of an industry would be materially retarded, by imports of synthetic l-methionine if the antidumping order regarding synthetic methionine from Japan is modified or revoked with respect to synthetic l-methionine provided for in item 425.04 of the Tariff Schedules of the United States.

SUPPLEMENTARY INFORMATION: On May 14, 1973, the Commission determined that an industry in the United States was injured within the meaning of the Antidumping Act, 1921, by reason of imports of synthetic methionine from Japan determined by the Secretary of Treasury to be sold or likely to be sold at less than fair value (hereinafter LTFV).

On July 3, 1973, the Department of the Treasury issued a finding of dumping, 7 Cust. B. 630 (1973), T.D. 73–188, and on July 10, 1973 published notice of the dumping finding in the Federal Register, 38 F.R. 18382.

On December 15, 1980, the Commission received a request to review its affirmative determination in investigation No. AA1921–115. The request was filed pursuant to section 751(b) of the Tariff Act of 1930 by Kyowa Hakko USA, Inc., an importer of synthetic l-methionine from Japan.

WRITTEN COMMENTS REQUESTED

Pursuant to section 207.45(b)(2) of the Commission's Rules of Practice and Procedure (46 F.R. 18023) (Mar. 23, 1981), the Commission requests comments on whether the following alleged changed circumstances are sufficient to warrant institution of a review investigation: (l) The likelihood that there is no industry in the United States which produces synthetic l-methionine, and (2) the likelihood that synthetic l-methionine from Japan is not like any form of synthetic methionine produced in the United States.

The purpose of the proposed investigation would be to determine whether an industry in the United States would be materially injured, would be threatened with material injury, or the establishment of an industry would be materially retarded if the antidumping order is modified or revoked with regard to synthetic l-methionine. Revocation or modification of the dumping finding as to synthetic l-methionine would not affect the Commission's affirmative determination as to other forms of synthetic methionine from Japan.

THE KYOWA HAKKO REQUEST

Copies of the Kyowa Hakko request and any other public documents in this matter are available to the public during official working

hours (8:45 a.m. to 5:15 p.m.) in the Office of the Secretary, U.S. International Trade Commission, 701 E Street NW., Washington, D.C. 20436; telephone 202–523–0161.

ADDITIONAL INFORMATION

Under section 201.8 of the Commission's Rules of Practice and Procedure (19 CFR 201.8), the signed original and 19 true copies of all written submissions must be filed with the Secretary to the Commission, 701 E Street NW., Washington, D.C. 20436; telephone 202–523–0161. All comments must be filed no later than 30 days after publication of this notice in the Federal Register. Any person desiring to submit a document (or portion thereof) to the Commission in confidence must request business confidential treatment under section 201.6 of the Commission's Rules of Practice and Procedure, (19 CFR 201.6). Such requests should be directed to the Secretary to the Commission and must include a full statement of the reasons why the Commission should grant such treatment. Each sheet must be clearly marked at the top "Confidential business data." The Commission will either accept the submission in confidence or return it. All nonconfidential written submissions will be available for public inspection in the Office of the Secretary.

FOR FURTHER INFORMATION CONTACT: John MacHatton, supervisory investigator, Office of Investigations, U.S. International Trade Commission, 202–523–0439; Warren H. Maruyama, Office of General Counsel, U.S. International Trade Commission, 202–523–0143.

By order of the Commission.

Issued: April 10, 1981.

KENNETH R. MASON,
Secretary.

In the Matter of CERTAIN LARGE VIDEO MATRIX DISPLAY SYSTEMS AND COMPONENTS THEREOF	Investigation No. 337-TA–75

Commission Hearing on the Presiding Officer's Recommendation and on Relief, Bonding, and the Public Interest, and the Schedule for Filing Written Submissions

AGENCY: U.S. International Trade Commission.

ACTION: The scheduling of oral arguments and briefing for Investigation No. 337–TA–75, Certain Large Video Matrix Display Systems and Components Thereof.

Notice is hereby given that the presiding officer has issued a recommended determination that there is a violation of section 337 of the Tariff Act of 1930, 19 U.S.C. 1337, in the unauthorized importation into the United States and sale of certain large video matrix display systems that are the subject of the Commission's investigation. Accordingly, the recommended determination and the record of the hearing have been certified to the Commission for review and a Commission determination. Interested persons may obtain copies of the nonconfidential version of the presiding offier's recommendation (and all other public documents on the record of the investigation) by contacting the Office of the Secretary, U.S. Intenational Trade Commission, 701 E Street, NW., room 161, Washington, D.C. 20436, telephone 202–523–0161.

COMMISSION HEARING: The Commission will hold a public hearing on May 8, 1981, in the Commission's hearing room, 701 E Street NW., Washington, D.C. 20436, beginning at 10 a.m. The hearing will be divided into two parts. First: The Commission will hear oral arguments on the presiding officer's recommended determination that a violation of section 337 of the Tariff Act of 1930 exists. Second: The Commission will hear presentations concerning appropriate relief, the effect that such relief would have upon the public interest, and the proper amount of the bond during the Presidential review period, in the event that the Commission determines that there is a violation of section 337 and that relief should be granted. These matters will be heard on the same day in order to facilitate the completion of this investigation within time limits established under law and to minimize the burden of this hearing upon the parties.

ORAL ARGUMENTS: Any party to the Commission's investigation or any interested Government agency may present an oral argument concerning the presiding officer's recommended determination. Such arguments will be limited to 20 minutes (exclusive of time consumed by questions from the Commission or its advisory staff), unless the parties make a timely request for additional time for making their arguments based on a showing of need. This time may be used in any way the party or agency making argument sees fit, i.e., a portion of the time may be reserved for rebuttal or devoted to summation. The oral arguments will be held in the following order: complainant' respondents, Government agencies, and the Commission investigative attorney. Any rebuttals will be held in this order: respondents, complainant, Government agencies, and the Commission investigative attorney. Persons making oral argument are reminded that such argument must be based upon the evidentiary record certified to the Commission by the presiding officer.

ORAL PRESENTATIONS ON RELIEF, BONDING, AND THE PUBLIC INTEREST: If the Commission finds that a violation of section 337 has occurred, it may issue (1) an order which could result in the exclusion of the subject articles from entry into the United States and/or (2) an order which could result in one or more respondents being required to cease and desist from engaging in unfair methods of competition or unfair acts in the importation and sale of such articles. Accordingly, the Commission is interested in hearing presentations which address the form of relief, if any, which should be ordered.

If the Commission finds that a violation of section 337 has occurred and orders some form of relief, the President has 60 days to approve or disapprove the Commission's action. During this period, the subject articles would be entitled to enter the United States under a bond in an amount determined by the Commission and prescribed by the Secretary of the Treasury. The Commission is therefore interested in hearing presentations concerning the amount of the bond, if any, which should be imposed.

If the Commission concludes that a violation of section 337 has occurred and contemplates some form of relief, it must consider the effect of that relief upon the public interest. The factors which the Commission will consider include the effect that an exclusion order and/or a cease and desist order would have upon (1) the public health and welfare, (2) competitive conditions in the U.S. economy, (3) the U.S. production of articles which are like or directly competitive with those which are the subject of the investigation, and (4) U.S. consumers.

Following the oral arguments on the presiding officer's recommendation, parties to the investigation, Government agencies, public-interest groups, and interested members of the public may make oral presentations on the issues of relief, bonding, and the public interest. Such presentations will be limited to 10 minutes (exclusive of time consumed by questions from the Commission and its advisory staff) and may include the testimony of witnesses. This portion of the hearing is legislative in nature; presentations need not be confined to the evidentiary record certified to the Commission by the presiding officer. Oral presentations on relief, bonding, and the public interest will be heard in the same order as oral arguments on the recommended determination.

WRITTEN SUBMISSIONS: In order to give greater focus to the hearing, the parties to the investigation, Government agencies, and the Commission investigative attorney are encouraged to file briefs on the issues of violation (to the extent they have not already briefed that issue in their written exceptions to the presiding officer's recommended determination), remedy, bonding, and the public interest.

Briefs must be filed not later than the close of business on April 22, 1981. During the course of the hearing, the parties may be asked to file posthearing briefs.

NOTICE OF APPEARANCE: Written requests to appear at the Commission hearing must be filed with the Office of the Secretary by April 22, 1981.

ADDITIONAL INFORMATION: The original copy and 11 true copies of all briefs must be filed with the Office of the Secretary not later than April 22, 1981. Any person desiring to discuss confidential information, or to submit a document (or a portion thereof) to the Commission in confidence, must request in camera treatment unless the information has already been granted such treatment by the presiding officer. All such requests should be directed to the Secretary to the Commission and must include a full statement of the reasons why the Commission should grant such treatment. Documents or arguments containing confidential information approved by the Commission for in camera treatment will be treated accordingly. All nonconfidential written submissions will be available for public inspection at the Secretary's Office.

Notice of this investigation was published in the Federal Register of December 19, 1979.

FOR FURTHER INFORMATION CONTACT: Michael B. Jennison, Esq., Office of the General Counsel, U.S. International Trade Commission, telephone 202–523–0350.

By order of the Commission.

Issued: April 14, 1981.

KENNETH R. MASON,
Secretary.

Index

U.S. Customs Service

Treasury decisions:

	T.D. No.
T.D. 81-93 has been cancelled	
Cotton Textile Products—Restriction on Entry/India	81-95
Cotton Textile Products—Restriction on Entry/Taiwan	81-96
Cotton and Wool Textile Products—Restriction on Entry/Macau	81-97
Cotton and Manmade Fiber Textile Products—Restriction on Entry/ Thailand	81-98
Cotton and Manmade Fiber Textile Products—Restriction on Entry/ Philippines	81-107
Cotton and Wool Textile Products—Restriction on Entry/ Macau	81-99
Cotton, Wool, and Manmade Fiber Textile Products—Restriction on Entry/ Korea	81-101
Cotton, Wool, and Manmade Fiber Textile Products—Restriction on Entry/Taiwan	81-103
Feather-filled Jackets, Coats, and Vests—Restriction on Entry/ Republic of Korea	81-102
Manmade Fiber Textile Products—Restriction on Entry/Costa Rica	81-100
Manmade Fiber Textile Products—Restriction on Entry/Republic of the Philippines	81-104
Wool and Manmade Fiber Textile Products—Restriction on Entry/ Poland	81-105
Wool and Manmade Fiber Textile Products—Restriction on Entry/ Romania	81-106
Courier Services: Procedure for processing importation by courier services	81-108
Manual Supplement 2300-09—Guidelines issuance of selected tariff classification	81-94

	C.A.D. No.
Decisions of the United States Court of Customs and Patent Appeals:	
Border Brokerage Co., Inc. v. *The United States*	1262

U.S. GOVERNMENT PRINTING OFFICE : 1981

DEPARTMENT OF THE TREASURY
U.S. CUSTOMS SERVICE
WASHINGTON, D.C. 20229

OFFICIAL BUSINESS
PENALTY FOR PRIVATE USE, $300

POSTAGE AND FEES PAID
DEPARTMENT OF THE TREASURY (CUSTOMS)
(TREAS. 552)

15/19

Customs Bulletin

Regulations, Rulings, Decisions, and Notices concerning Customs and related matters

and Decisions

of the United States Court of Customs and Patent Appeals and the United States Court of International Trade

Vol. 15 — MAY 13, 1981 — No. 19

NEWARK PUBLIC LIBRARY
JUN 2 1981
U. S. GOVT. PUBS.
DEPOSITORY 376

This issue contains

T.D. 81–109 through 81–117
C.S.D. 81–76 through 81–100
General Notice
Slip Op. 81–31
International Trade Commission Notice

THE DEPARTMENT OF THE TREASURY
U.S. Customs Service

T 1.11/3:

NOTICE

The abstracts, rulings, and notices which are issued weekly by the U.S. Customs Service are subject to correction for typographical or other printing errors. Users may notify the U.S. Customs Service, Logistics Management Division, Washington, D.C. 20229, of any such errors in order that corrections may be made before the bound volumes are published.

For sale by the Superintendent of Documents, U.S. Government Printing Office, Washington, D.C. 20402. Price: $2.25 (single copy domestic); $2.85 (single copy foreign). Subscription price: $85.00 a year domestic; $106.25 a year foreign.

U.S. Customs Service

Treasury Decisions

(T.D. 81-109)

Cotton, Wool, and Manmade Fiber Textile Products—Restriction on Entry

Restriction on entry of cotton, wool, and manmade fiber textile products manufactured or produced in Korea

There are published below directives of September 5, 23, and 25, 1980, received by the Commissioner of Customs from the chairman, Committee for the Implementation of Textile Agreements, concerning restriction on entry of cotton, wool, and manmade fiber textile products in certain categories manufactured or produced in Korea. These directives amend, but do not cancel, that committee's directive of December 20, 1979 (T.D. 80-65).

These directives were published in the Federal Register on September 9, 1980 (45 F.R. 59371), September 26, 1980 (45 F.R. 63897), September 30, 1980 (45 F.R. 64625), and September 30, 1980 (45 F.R. 64624), by the committee.

(QUO-2-1)

Dated: April 27, 1981.

WILLIAM D. SLYNE
(For Richard R. Rosettie, Acting
Director, Duty Assessment Division).

U.S. DEPARTMENT OF COMMERCE,
INTERNATIONAL TRADE ADMINISTRATION,
Washington, D.C., September 5, 1980.

Committee for the Implementation of Textile Agreements

COMMISSIONER OF CUSTOMS,
Department of the Treasury,
Washington, D.C.

DEAR MR. COMMISSIONER: This directive amends, but does not cancel, the directive issued to you on December 20, 1979, by the

chairman, Committee for the Implementation of Textile Agreements, concerning imports into the United States of certain cotton, wool, and manmade fiber textile products, produced or manufactured in the Republic of Korea.

Under the terms of the Arrangement Regarding International Trade in Textiles done at Geneva on December 20, 1973, as extended on December 15, 1977; pursuant to the Bilateral Cotton, Wool and Man-Made Fiber Textile Agreement of December 23, 1977, as amended, between the Governments of the United States and the Republic of Korea; and in accordance with the provisions of Executive Order 11651 of March 3, 1972, as amended by Executive Order 11951 of January 6, 1977, you are directed to prohibit, effective on September 9, 1980, and for the 12-month period beginning on January 1, 1980, and extending through December 31, 1980, entry into the United States for consumption and withdrawal from warehouse for consumption of wool textile products in category 445/446, produced or manufactured in the Republic of Korea in excess of 49,915 dozen.[1]

Wool textile products in category 445/446 which have been exported to the United States prior to January 1, 1980, shall not be subject to this directive.

Wool textile products in category 445/446 which have been released from the custody of the U.S. Customs Service under the provisions of 19 U.S.C. 1448(b) or 1484(a)(1)(A) prior to the effective date of this directive shall not be denied entry under this directive.

A detailed description of the textile categories in terms of TSUSA numbers was published in the Federal Register on February 28, 1980 (45 F.R. 13172), as amended on April 23, 1980 (45 F.R. 27463), and August 12, 1980 (45 F.R. 53506).

In carrying out the above directions, entry into the United States for consumption shall be construed to include entry for consumption into the Commonwealth of Puerto Rico.

The actions taken with respect to the Government of the Republic of Korea and with respect to imports of wool textile products from the Republic of Korea have been determined by the Committee for the Implementation of Textile Agreements to involve foreign affairs functions of the United States. Therefore, these directions to the Commissioner of Customs, which are necessary for the implementation of such actions, fall within the foreign affairs exception to the

---

[1] The level of restraint has not been adjusted to reflect any imports after Dec. 31, 1979. Imports during the January, June period of 1980 have amounted to 3,673 dozen in category 445 and 42,300 dozen in category 446.

rulemaking provisions of 5 U.S.C. 553. This letter will be published in the Federal Register.

Sincerely,

PAUL T. O'DAY,
Chairman, Committee for the Implementation of Textile Agreements.

U.S. DEPARTMENT OF COMMERCE,
INTERNATIONAL TRADE ADMINISTRATION,
Washington, D.C., September 23, 1980.

Committee for the Implementation of Textile Agreements

COMMISSIONER OF CUSTOMS,
Department of the Treasury,
Washington, D.C.

DEAR MR. COMMISSIONER: This directive amends, but does not cancel, the directive of December 20, 1979, from the chairman of the Committee for the Implementation of Textile Agreements, concerning imports into the United States of certain cotton, wool, and manmade fiber textile products, produced or manufactured in the Republic of Korea.

Under the terms of the Arrangement Regarding International Trade in Textiles done at Geneva on December 20, 1973, as extended on December 15, 1977; pursuant to the Bilateral Cotton, Wool and Man-Made Fiber Textile Agreement of December 23, 1977, as amended, between the Governments of the United States and the Republic of Korea; and in accordance with the provisions of Executive Order 11651 of March 3, 1972, as amended by Executive Order 11951 of January 6, 1977, you are directed to prohibit, effective on September 24, 1980, and for the 12-month period beginning on January 1, 1980, and extending through December 31, 1980, entry into the United States for consumption and withdrawal from warehouse for consumption of manmade fiber textile products in category 645/646, produced or manufactured in the Republic of Korea, in excess of 2,717,391 dozen.[1]

The action taken with respect to the Government of the Republic of Korea and with respect to imports of manmade fiber textile products from the Republic of Korea has been determined by the Committee for the Implementation of Textile Agreements to involve foreign affairs functions of the United States. Therefore, the directions to the

---

[1] The level of restraint has not been adjusted to account for any imports after Dec. 31, 1979.

Commissioner of Customs, which are necessary for the implementation of such actions, fall within the foreign affairs exception to the rulemaking provisions of 5 U.S.C. 553. This letter will be published in the Federal Register.

Sincerely,

ARTHUR GAREL,
Acting Chairman, Committee for the Implementation of Textile Agreements.

U.S. DEPARTMENT OF COMMERCE,
INTERNATIONAL TRADE ADMINISTRATION,
Washington, D.C., September 25, 1980.

Committee for the Implementation of Textile Agreements

COMMISSIONER OF CUSTOMS,
Department of the Treasury,
Washington, D.C.

DEAR MR. COMMISSIONER: This directive amends, but does not cancel, the directive of December 20, 1979, from the chairman of the Committee for the Implementation of Textile Agreements which directed you to prohibit, effective on January 1, 1980, and for the 12-month period extending through December 31, 1980, entry into the United States for consumption, and withdrawal from warehouse for consumption, of cotton, wool, and manmade fiber textile products, produced or manufactured in the Republic of Korea in certain designated categories.

Under the terms of the Arrangement Regarding International Trade in Textiles done at Geneva on December 20, 1973, as extended on December 15, 1977; pursuant to the Bilateral Cotton, Wool and Man-Made Fiber Textile Agreement of December 23, 1977, as amended between the Governments of the United States and the Republic of Korea; and in accordance with the provisions of Executive Order 11651 of March 3, 1972, as amended by Executive Order 11951 of January 6, 1977, you are directed, effective on September 25, 1980, to cancel the import controls established in the directive of December 20, 1979, for categories 314, 320, 331, 350, 410, 459pt. (TSUSA Nos. 700.7510 through 700.7560), 605, 605pt. (TSUSA No. 316.6020), 612, 612pt. (TSUSA Nos. 338.3037 and 338.3038), 669, 669pt. (TSUSA No. 389.6210), 669pt. (TSUSA No. 355.4560), 614, and 631.

The actions taken with respect to the Government of the Republic of Korea and with respect to imports of cotton, wool, and manmade fiber textile products from the Republic of Korea have been determined by the Committee for the Implementation of Textile Agreements to involve foreign affairs functions of the United States. Therefore, these directions to the Commissioner of Customs, which are necessary to the implementation of such actions, fall within the foreign affairs exception to the rulemaking provisions of 5 U.S.C. 553. This letter will be published in the Federal Register.

Sincerely,

PAUL T. O'DAY,
Chairman, Committee for the Implementation of Textile Agreements.

U.S. DEPARTMENT OF COMMERCE,
INTERNATIONAL TRADE ADMINISTRATION,
Washington, D.C., September 25, 1980.

Committee for the Implementation of Textile Agreements

COMMISSIONER OF CUSTOMS,
Department of the Treasury,
Washington, D.C.

DEAR MR. COMMISSIONER: To facilitate implementation of the Bilateral Cotton, Wool and Man-Made Fiber Textile Agreement of December 23, 1977, between the Governments of the United States and the Republic of Korea, it would be appreciated if you would count, effective on September 25, 1980, and until further notice, entries for consumption and withdrawals from warehouse for consumption of cotton, wool, and manmade fiber textile products exported from Korea after December 31, 1979, in the following categories: 314, 320, 605, 612, 614, 669, 669pt. (TSUSA No. 355.4560).

Such counting should operate under the same procedures that are used for categories that Customs has been directed to control imports.

This letter will not be published in the Federal Register.

Sincerely,

PAUL T. O'DAY,
Chairman, Committee for the Implementation of Textile Agreements.

U.S. DEPARTMENT OF COMMERCE,
INTERNATIONAL TRADE ADMINISTRATION,
Washington, D.C., September 25, 1980.

Committee for the Implementation of Textile Agreements

COMMISSIONER OF CUSTOMS,
Department of the Treasury,
Washington, D.C.

DEAR MR. COMMISSIONER: This directive amends, but does not cancel, the directive issued to you on December 20, 1979, by the chairman, Committee for the Implementation of Textile Agreements, concerning imports into the United States of certain cotton, wool, and manmade fiber textile products, produced or manufactured in the Republic of Korea.

Under the terms of the Arrangement Regarding International Trade in Textiles done at Geneva on December 20, 1973, as extended on December 15, 1977; pursuant to the Bilateral Cotton, Wool and Man-Made Fiber Textile Agreement of December 23, 1977, as amended, between the Governments of the United States and the Republic of Korea; and in accordance with the provisions of Executive Order 11651 of March 3, 1972, as amended by Executive Order 11951 of January 6, 1977, you are directed, effective on September—, 1980, and for the 12-month period beginning on January 1, 1980, and extending through December 31, 1980, to increase the 12-month level of restraint for manmade fiber textile products in category 604 to 487,-805 pounds.[1] Further, you are directed, effective on October 6, 1980, and for the 12-month period beginning on January 1, 1980, and extending through December 31, 1980, to prohibit entry into the United States for consumption, and withdrawal from warehouse for consumption, of cotton and wool textile products in categories 319 and 443, produced or manufactured in the Republic of Korea, in excess of the following levels of restraint:

Category	*12-month level of restraint*[1]
319	12,000,000 square yards
443	26,704 dozen

Textile products in categories 319 and 443 which have been exported to the United States prior to January 1, 1980, shall not be subject to this directive.

---

[1] The levels of restraint have not been adjusted to reflect any imports after Dec. 31, 1979. Imports during the January-July period of 1980 have amounted to 3,143,050 square yards in category 319 and 13,009 dozen in category 443.

Textile products in categories 319 and 443 which have been released from the custody of the U.S. Customs Service under the provisions of 19 U.S.C. 1448(b) or 1484(a)(1)(A) prior to the effective date of this directive shall not be denied entry under this directive.

A detailed description of the textile categories in terms of TSUSA numbers was published in the Federal Register on February 28, 1980 (45 F.R. 13172), as amended on April 23, 1980 (45 F.R. 27463), and August 12, 1980 (45 F.R. 53506).

In carrying out the above directions, entry into the United States for consumption shall be construed to include entry for consumption into the Commonwealth of Puerto Rico.

The actions taken with respect to the Government of the Republic of Korea and with respect to imports of cotton, wool, and manmade fiber textile products from the Republic of Korea have been determined by the Committee for the Implementation of Textile Agreements to involve foreign affairs functions of the United States. Therefore, these directions to the Commissioner of Customs, which are necessary for the implementation of such actions, fall within the foreign affairs exception to the rulemaking provisions of 5 U.S.C. 553. This letter will be published in the Federal Register.

Sincerely,

PAUL T. O'DAY,
Chairman, Committee for the Implementation of Textile Agreements.

(T.D. 81-110)

Cotton and Manmade Fiber Textile Products—Restriction on Entry

Restriction on entry of cotton and manmade fiber textile products manufactured or produced in the Republic of Korea

There are published below directives of November 13 and 21, 1980, and December 12, 1980, received by the Commissioner of Customs from the acting chairman, Committee for the Implementation of Textile Agreements, concerning restriction on entry of cotton and manmade fiber textile products in certain categories manufactured or produced in the Republic of Korea. These directives amend, but do not cancel, that committee's directive of December 20, 1979 (T.D. 80-65).

346-391 O - 81 - 2

These directives were published in the Federal Register on November 17, 1980 (45 F.R. 75733), November 28, 1980 (45 F.R. 79135), and December 18, 1980 (45 F.R. 83309), by the committee.

(QUO-2-1)

Dated: April 27, 1981.

WILLIAM D. SLYNE
(For Richard R. Rosettie, Acting
Director, Duty Assessment Division).

U.S. DEPARTMENT OF COMMERCE,
INTERNATIONAL TRADE ADMINISTRATION,
Washington, D.C., November 13, 1980.

Committee for the Implementation of Textile Agreements

COMMISSIONER OF CUSTOMS,
Department of the Treasury,
Washington, D.C.

DEAR MR. COMMISSIONER: On December 27, 1979, the chairman of the Committee for the Implementation of Textile Agreements directed you to prohibit entry for consumption or withdrawal from warehouse for consumption during the 12-month period which began on January 1, 1980, and extends through December 31, 1980, of cotton, wool, and manmade fiber textile products, produced or manufactured in the Republic of Korea, in certain specified categories, in excess of designated levels of restraint. The chairman further advised you that the levels of restraint are subject to adjustment.[1]

Under the terms of the Arrangement Regarding International Trade in Textiles done at Geneva on December 20, 1973, as extended on December 15, 1977; pursuant to the Bilateral Cotton, Wool and Man-Made Fiber Textile Agreement of December 23, 1977, as amended, between the Governments of the United States and the Republic of Korea; and in accordance with the provisions of Executive Order 11651 of March 3, 1972, as amended by Executive Order 11951 of January 6, 1977, you are directed to permit entry,

---

[1] The term "adjustment" refers to those provisions of the Bilateral Cotton, Wool and Man-Made Fiber Textile Agreement of Dec. 23, 1977, as amended, between the Governments of the United States and the Republic of Korea which provide, in part, that: (1) Within the aggregate and applicable group limits, specific levels of restraint may be exceeded by designated percentages; (2) these same levels may be increased for carryover and carryforward up to 11 percent of the applicable category limit; (3) consultation levels may be increased within the aggregate and applicable group limits upon agreement between the two governments; and (4) administrative arrangements or adjustments may be made to resolve minor problems arising in the implementation of the agreement.

effective on November 18, 1980, and extending through December 31, 1980, of 55,448 dozen of manmade fiber textile products in category 645/6, produced or manufactured in the Republic of Korea and exported on and after January 1, 1980.

The action taken with respect to the Government of the Republic of Korea and with respect to imports of manmade fiber textile products from Korea has been determined by the Committee for the Implementation of Textile Agreements to involve foreign affairs functions of the United States. Therefore, these directions to the Commissioner of Customs, which are necessary for the implementation of such actions, fall within the foreign affairs exception to the rulemaking provisions of 5 U.S.C. 553. This letter will be published in the Federal Register.

Sincerely,

ARTHUR GAREL,
Acting Chairman, Committee for the Implementation of Textile Agreements.

U.S. DEPARTMENT OF COMMERCE,
INTERNATIONAL TRADE ADMINISTRATION,
Washington, D.C., November 21, 1980.

Committee for the Implementation of Textile Agreements

COMMISSIONER OF CUSTOMS,
Department of the Treasury,
Washington, D.C.

DEAR MR. COMMISSIONER: This directive further amends, but does not cancel, the directive issued to you on December 20, 1979, by the chairman, Committee for the Implementation of Textile Agreements, concerning imports into the United States of certain cotton, wool, and manmade fiber textile products, produced or manufactured in the Republic of Korea.

Under the terms of the Arrangement Regarding International Trade in Textiles done at Geneva on December 20, 1973, as extended on December 15, 1977; pursuant to the Bilateral Cotton, Wool and Man-Made Textile Agreement of December 23, 1977, as amended, between the Governments of the United States and the Republic of Korea; and in accordance with the provisions of Executive Order 11651 of March 3, 1972, as amended by Executive Order 11951 of January 6, 1977, you are directed to prohibit, effective on December 1, 1980, and for the 12-month period beginning on January 1,

1980, and extending through December 31, 1980, entry into the United States for consumption and withdrawal from warehouse for consumption of cotton textile products in category 338/339, produced or manufactured in the Republic of Korea, in excess of the following level of restraint:

Category	*12-month level of restraint* [1]
338/339	473, 333

Cotton textile products in category 338/339 which have been exported to the United States prior to January 1, 1980, shall not be subject to this directive.

Cotton textile products in category 338/339 which have been released from the custody of the U.S. Customs Service under the provisions of 19 U.S.C. 1448(b) or 1484(a)(1)(A) prior to the effective date of this directive shall not be denied entry under this directive.

A detailed description of the textile categories in terms of TSUSA numbers was published in the Federal Register on February 28, 1980 (45 F.R. 13172), as amended on April 23, 1980 (45 F.R. 27463), and August 12, 1980 (45 F.R. 53506).

In carrying out the above directions, the Commissioner of Customs should construe entry into the United States for consumption to include entry for consumption into the Commonwealth of Puerto Rico.

The actions taken with respect to the Government of the Republic of Korea and with respect to imports of manmade fiber textile products from the Republic of Korea have been determined by the Committee for the Implementation of Textile Agreements to involve foreign affairs functions of the United States. Therefore, these directions to the Commissioner of Customs, which are necessary for the implementation of such actions, fall within the foreign affairs exception to the rule-making provisions of 5 U.S.C. 553. This letter will be published in the Federal Register.

Sincerely,

ARTHUR GAREL,
Acting Chairperson, Committee for the Implementation of Textile Agreements.

---

[1] The level of restraint for category 338/339 has not been adjusted to reflect any imports after Dec. 31, 1979. Imports in the category during the January–September 1980 period have amounted to 354,299 dozen o. which 162,128 dozen should be charged to category 338 and 192,171 dozen should be charged to category 339.

U.S. DEPARTMENT OF COMMERCE,
INTERNATIONAL TRADE ADMINISTRATION,
Washington, D.C., December 12, 1980.

Committee for the Implementation of Textile Agreements

COMMISSIONER OF CUSTOMS,
Department of the Treasury,
Washington, D.C.

DEAR MR. COMMISSIONER: On December 20, 1979, the chairman, Committee for the Implementation of Textile Agreements, directed you to prohibit entry for consumption or withdrawal from warehouse for consumption, during the 12-month period beginning on January 1, 1980, and extending through December 31, 1980, of cotton, wool, and manmade fiber textile products in certain specified categories, produced or manufactured in the Republic of Korea, in excess of designated levels of restraint. The chairman further advised you that the levels of restraint are subject to adjustment.[1]

Under the terms of the Arrangement Regarding International Trade in Textiles done at Geneva on December 20, 1973, as extended on December 15, 1977, pursuant to the Bilateral Cotton, Wool and Man-Made Fiber Textile Agreement of December 23, 1977, as amended, between the Governments of the United States and the Republic of Korea; and in accordance with the provisions of Executive Order 11651 of March 3, 1972, as amended by Executive Order 11651 of January 6, 1977, you are directed, effective on December 12, 1980, to amend the 12-month levels of restraint established for textile products in categories 333/334/335, 433, and 640 to the following:

Category	*Amended 12-month level of restraint*[2]
333/334/335	92,041 dozen of which not more than 49,407 dozen shall be in category 333/334 and not more than 53,476 dozen shall be in category 335.

[1] The term "adjustment" refers to those provisions of the Bilateral Cotton, Wool and Man-Made Fiber Textile Agreement of Dec. 28, 1977, as amended, between the Governments of the United States and the Republic of Korea, which provide, in part, that: (1) Within the aggregate and applicable group limits, specific levels of restraint may be adjusted by designated percentages; (2) these same levels may be adjusted for carryover and carryforward up to 11 percent of the applicable category limit; (3) administrative arrangements or adjustments may be made to resolve problems arising in the implementation of the agreement.

[2] The levels of restraint have not been adjusted to reflect any entries after Dec. 31, 1979.

433	12, 625	dozen
640 pt.[3]	4, 212, 645	dozen
640 pt.[4]	1, 769, 529	dozen

The actions taken with respect to the Government of the Republic of Korea and with respect to imports of cotton, wool, and manmade fiber textile products from the Republic of Korea have been determined by the Committee for the Implementation of Textile Agreements to involve foreign affairs functions of the United States. Therefore, these directions to the Commissioner of Customs, which are necessary to the implementation of such actions, fall within the foreign affairs exception to the rulemaking provisions of 5 U.S.C. 553. This letter will be published in the Federal Register.

Sincerely,

ARTHUR GAREL,
Acting Chairman, Committee for the Implementation of Textile Agreements.

(T.D. 81–111)

Cotton and Manmade Fiber Textile Products—Restriction on Entry

Restriction on entry of cotton and manmade fiber textile products manufactured or produced in Taiwan

There is published below a directive of October 22, 1980, received by the Commissioner of Customs from the acting chairman, Committee for the Implementation of Textile Agreements, concerning restriction on entry of cotton and manmade fiber textile products in certain categories manufactured or produced in Taiwan. This directive amends, but does not cancel, that committee's directive of December 21, 1979 (T.D. 80–66).

This directive was published in the Federal Register on October 27, 1980 (45 F.R. 70959), by the committee.

(QUO–2–1)

Dated: April 27, 1981.

WILLIAM D. SLYNE
(For Richard R. Rosettie, Acting Director, Duty Assessment Division).

---

[3] In category 640, only TSUSA Nos. 380.0455, 380.8431, and 380.8433.
[4] In category 640, all TSUSA numbers except those listed in footnote 3.

U.S. DEPARTMENT OF COMMERCE,
INTERNATIONAL TRADE ADMINISTRATION,
Washington, D.C., October 22, 1980.

Committee for the Implementation of Textile Agreements

COMMISSIONER OF CUSTOMS,
Department of the Treasury,
Washington, D.C.

DEAR MR. COMMISSIONER: This directive further amends, but does not cancel, the directive issued to you on December 21, 1979, from the chairman, Committee for the Implementation of Textile Agreements, concerning imports into the United States of certain cotton, wool, and manmade fiber textile products, produced or manufactured in Taiwan.

Under the terms of the Arrangement Regarding International Trade in Textiles done at Geneva on December 20, 1973, as extended on December 15, 1977; pursuant to the Cotton, Wool and Man-Made Fiber Textile Agreement of June 8, 1978, as amended, concerning textile products from Taiwan, and in accordance with the provisions of Executive Order 11651 of March 3, 1972, as amended by Executive Order 11951 of January 6, 1977, you are directed further to amend, effective on October 27, 1980, the 12-month levels of restraint established for categories 333/334/335, 338/339, 340, 341 638, 639, 645/646, and 659pt. to the following:

Category	*Amended 12-month level of restraint* [1]	
333/334/335	106, 652	dozen of which not more than 55,855 dozen shall be in category 333/334 and not more than 66,795 dozen shall be in category 335.
338/339	569, 000	dozen
340	656, 737	dozen
341	373, 251	dozen
638	1, 575, 556	dozen
639	5, 205, 207	dozen
645/646	3, 947, 021	dozen
659pt.[2]	3, 010, 925	pounds

The actions taken with respect to the authorities in Taiwan and with respect to imports of cotton and manmade fiber textile products

[1] The levels of restraint have not been adjusted to account for any imports after Dec. 31, 1979.
[2] In category 659, only TSUSA Nos. 703.0500 and 703.1000.

from Taiwan have been determined by the Committee for the Implementation of Textile Agreements to involve foreign affairs functions of the United States. Therefore, these directions to the Commissioner of Customs, which are necessary to the implementation of such actions, fall within the foreign affairs exception to the rulemaking provisions of 5 U.S.C. 553. This letter will be published in the Federal Register.

Sincerely,

RONALD I. LEVIN,
Acting Chairman, Committee for the Implementation of Textile Agreements.

(T.D. 81-112)

Cotton and Wool Textile Products—Restriction on Entry

Restriction on entry of cotton and wool textile products manufactured or produced in Malaysia

There are published below directives of November 25, 1980, and December 1, 1980, received by the Commissioner of Customs from the chairman, Committee for the Implementation of Textile Agreements, concerning restriction on entry of cotton and wool textile products in categories 446 and 335 manufactured or produced in Malaysia. These directives amend, but do not cancel, that committee's directive of December 11, 1979 (T.D. 80-52).

These directives were published in the Federal Register on December 2, 1980 (45 F.R. 79864), and December 8, 1980 (45 F.R. 80862), by the committee.

(QUO-2-1)

Dated: April 27, 1981.

MICHAEL GREENHUT
(For Richard R. Rosettie, Acting Director, Duty Assessment Division).

U.S. DEPARTMENT OF COMMERCE,
INTERNATIONAL TRADE ADMINISTRATION,
Washington, D.C., November 25, 1980.

Committee for the Implementation of Textile Agreements

COMMISSIONER OF CUSTOMS,
Department of the Treasury,
Washington, D.C.

DEAR MR. COMMISSIONER: This directive further amends, but does not cancel, the directive of December 11, 1979, from the chair-

man, Committee for the Implementation of Textile Agreements, concerning imports into the United States of certain cotton, wool, and manmade fiber textile products, produced or manufactured in Malaysia.

Under the terms of the Arrangement Regarding International Trade in Textiles done at Geneva on December 20, 1973, as extended on December 15, 1977; pursuant to the Bilateral Cotton, Wool and Man-Made Fiber Textile Agreement of May 17 and June 8, 1978, as amended, between the Governments of the United States and Malaysia; and in accordance with the provisions of Executive Order 11651 of March 3, 1972, as amended by Executive Order 11951 of January 6, 1977, you are directed to prohibit, effective on December 3, 1980, and for the 12-month period beginning on January 1, 1980, and extending through December 31, 1980, entry into the United States for consumption and withdrawal from warehouse for consumption of wool textile products in category 446, produced or manufactured in Malaysia, in excess of the following level of restraint:

Category	*Adjusted 12-month level of restraint* [1]
446	18,614 dozen

The actions taken with respect to the Government of Malaysia and with respect to imports of wool textile products from Malaysia have been determined by the Committee for the Implementation of Textile Agreements to involve foreign affairs functions of the United States. Therefore, these directions to the Commissioner of Customs, which are necessary for the implementation of such actions, fall within the foreign affairs exception to the rulemaking provisions of 5 U.S.C. 553. This letter will be published in the Federal Register.

Sincerely,

PAUL T. O'DAY,
Chairman, Committee for the Implementation of Textile Agreements.

U.S. DEPARTMENT OF COMMERCE,
INTERNATIONAL TRADE ADMINISTRATION,
Washington, D.C., December 1, 1980.

Committee for the Implementation of Textile Agreements

COMMISSIONER OF CUSTOMS,
Department of the Treasury,
Washington, D.C.

DEAR MR. COMMISSIONER: This directive further amends, but does not cancel, the directive of December 11, 1979, from the chair-

[1] The level of restraint has not been adjusted to reflect any imports after Dec. 31, 1979.

man, Committee for the Implementation of Textile Agreements, concerning imports into the United States of certain cotton, wool, and manmade fiber textile products, produced or manufactured in Malaysia.

Under the terms of the Arrangement Regarding International Trade in Textiles done at Geneva on December 20, 1973, as extended on December 15, 1977; pursuant to the Bilateral Cotton, Wool and Man-Made Fiber Textile Agreement of May 17 and June 8, 1978, as amended, between the Governments of the United States and Malaysia; and in accordance with the provisions of Executive Order 11651 of March 3, 1972, as amended by Executive Order 11951 of January 6, 1977, you are directed to prohibit, effective on December 5, 1980, and for the 12-month period beginning on January 1, 1980, and extending through December 31, 1980, entry into the United States for consumption and withdrawal from warehouse for consumption of cotton textile products in category 335, produced or manufactured in Malaysia, in excess of the 20,659 dozen.[1]

The actions taken with respect to the Government of Malaysia and with respect to imports of cotton textile products from Malaysia have been determined by the Committee for the Implementation of Textile Agreements to involve foreign affairs functions of the United States. Therefore, these directions to the Commissioner of Customs, which are necessary for the implementation of such actions, fall within the foreign affairs exception to the rulemaking provisions of 5 U.S.C. 553. This letter will be published in the Federal Register.

Sincerely,

PAUL T. O'DAY,
Chairman, Committee for the Implementation of Textile Agreements.

(T.D. 81-113)

Cotton Textile Products—Restriction on Entry

Restriction on entry of cotton textile products manufactured or produced in Singapore

There is published below a directive of November 26, 1980, received by the Commissioner of Customs from the chairman, Committee for the Implementation of Textile Agreements, concerning restriction on entry of cotton textile products in categories 317 and

---

[1] The level of restraint has not been adjusted to reflect any imports after Dec. 31, 1979.

341 manufactured or produced in Singapore. This directive amends, but does not cancel, that committee's directive of December 14, 1979 (T.D. 80–50).

This directive was published in the Federal Register on December 2, 1980 (45 F.R. 79865), by the committee.

(QUO–2–1)

Dated: April 27, 1981.

RICHARD R. ROSETTIE,
Acting Director,
Duty Assessment Division.

U.S. DEPARTMENT OF COMMERCE,
INTERNATIONAL TRADE ADMINISTRATION,
Washington, D.C., November 26, 1980.

Committee for the Implementation of Textile Agreements

COMMISSIONER OF CUSTOMS,
Department of the Treasury,
Washington, D.C.

DEAR MR. COMMISSIONER: On December 14, 1979, the chairman of the Committee for the Implementation of Textile Agreements directed you to prohibit entry for consumption, or withdrawal from warehouse for consumption during the 12-month period which began on January 1, 1980, and extends through December 31, 1980, of cotton, wool, and manmade fiber textile products, produced or manufactured in Singapore, in certain specified categories, in excess of designated levels of restraint. The chairman further advised you that the levels of restraint are subject to adjustment.[1]

Under the terms of the Arrangement Regarding International Trade in Textiles done at Geneva on December 20, 1973, as extended on December 15, 1977; pursuant to the Bilateral Cotton, Wool and Man-Made Fiber Textile Agreement of September 21, and 22, 1978, as amended, between the Governments of the United States and Singapore; and in accordance with the provisions of Executive Order 11651 of March 3, 1972, as amended by Executive Order 11951 of January 6, 1977, you are directed to prohibit, effective on December 3, 1980, and for the 12-month period beginning on January 1, 1980, and extend-

[1] The term "adjustment" refers to those provisions of the Bilateral Cotton Textile Agreement of Sept. 21 and 22, 1978, as amended, between the Governments of the United States and the Republic of Singapore which provide, in part, that: (1) Within the aggregate and applicable group limits, specific limits and sublimits may be exceeded by designated percentages; (2) specific levels may be increased for carryover and carryforward up to 11 percent of the applicable category limit; and (3) administrative arrangements or adjustments may be made to resolve minor problems arising in the implementation of the agreement.

ing through December 31, 1980, entry into the United States for consumption and withdrawal from warehouse for consumption of cotton textile products in categories 317 and 341, produced or manufactured in Singapore, and in the case of category 317, exported on and after January 1, 1980, in excess of the following adjusted levels of restraint:

Category	*Adjusted 12-month level of restraint* [1]
317	14,564,615 square yards
341	58,000 dozen

The actions taken with respect to the Government of Republic of Singapore and with respect to imports of cotton textile products from Singapore have been determined by the Committee for the Implementation of Textile Agreements to involve foreign affairs functions of the United States. Therefore, these directions to the Commissioner of Customs, which are necessary for the implementation of such actions, fall within the foreign affairs exception to the rulemaking provisions of 5 U.S.C. 553. This letter will be published in the Federal Register.

Sincerely,

PAUL T. O'DAY,
Chairman, Committee for the Implementation of Textile Agreements.

(T.D. 81-114)

Cotton Textile Products—Restriction on Entry

Restriction on entry of cotton textile products manufactured or produced in Romania

There is published below a directive of December 17, 1980, received by the Commissioner of Customs from the chairman, Committee for the Implementation of Textile Agreements, concerning restriction on entry of cotton textile products in categories 335 and 338 manufactured or produced in Romania.

This directive was published in the Federal Register on December 23, 1980 (45 F.R. 84841), by the committee.

(QUO-2-1)

Dated: April 27, 1981.

RICHARD R. ROSETTIE,
Acting Director,
Duty Assessment Division.

---

[1] The levels of restraint have not been adjusted to reflect any imports after Dec. 31, 1979. Imports in category 317 have amounted to 10,310,040 square yards during the January-September 1980 period.

U.S. DEPARTMENT OF COMMERCE,
INTERNATIONAL TRADE ADMINISTRATION,
Washington, D.C., December 17, 1980.

Committee for the Implementation of Textile Agreements

COMMISSIONER OF CUSTOMS,
Department of the Treasury,
Washington, D.C.

DEAR MR. COMMISSIONER: Under the terms of the Arrangement Regarding International Trade in Textiles done at Geneva on December 20, 1973, as extended on December 15, 1977; pursuant to the Bilateral Cotton Textile Agreement of January 6 and 25, 1978, as amended, between the Governments of the United States and the Socialist Republic of Romania; and in accordance with the provisions of Executive Order 11651 of March 3, 1972, as amended by Executive Order 11951 of January 6, 1977, you are directed to prohibit, effective on January 1, 1981, and for the 12-month period extending through December 31, 1981, entry into the United States for consumption and withdrawal from warehouse for consumption of cotton textile products in categories 335 and 338, produced or manufactured in Romania, in excess of the following levels of restraint:

Category	*12-month level of restraint*
335	36,320 dozen
338	256,000 dozen of which not more than 97,222 dozen shall be in TSUSA Nos. 380.0028, 380.0029, 380.0651, and 380.0652

In carrying out this directive, entries of cotton textile products in the foregoing categories, produced or manufactured in the Socialist Republic of Romania, which have been exported to the United States on and after January 1, 1980, and extending through December 31, 1980, shall to the extent of any unfilled balances, be charged against the levels of restraint established for such goods during the 12-month period beginning on January 1, 1980, and extending through December 31, 1980. In the event the levels of restraint established for that period have been exhausted by previous entries, such goods shall be subject to the levels set forth in this letter.

The levels of restraint set forth above are subject to adjustment according to the provisions of the bilateral agreement of January 6 and 25, 1978, as amended, between the Governments of the United States and the Socialist Republic of Romania, which provide, in part, that: (1) The two governments will consult regarding adjustments in

consultation levels and (2) administrative arrangements may be made to resolve problems arising in the implementation of the agreement. Any appropriate future adjustments under the foregoing provision of the bilateral agreement will be made to you by letter.

A detailed description of the textile categories in terms of TSUSA numbers was published in the Federal Register on February 28, 1980 (45 F.R. 13172), as amended on April 23, 1980 (45 F.R. 27463), and August 12, 1980 (45 F.R. 53506).

In carrying out the above directions, the Commissioner of Customs should construe entry into the United States for consumption to include entry for consumption into the Commonwealth of Puerto Rico.

The actions taken with respect to the Government of the Socialist Republic of Romania and with respect to imports of cotton textile products from Romania have been determined by the Committee for the Implementation of Textile Agreements to involve foreign affairs functions of the United States. Therefore, these directions to the Commissioner of Customs, which are necessary for the implementation of such actions, fall within the foreign affairs exception to the rulemaking provisions of 5 U.S.C. 553. This letter will be published in the Federal Register.

Sincerely,

PAUL T. O'DAY,
Chairman, Committee for the Implementation of Textile Agreements.

(T.D. 81-115)

Foreign Currencies—Daily Rates for Countries Not on Quarterly List

Rates of exchange based on rates certified to the Secretary of the Treasury by the Federal Reserve Bank of New York for the Brazil cruzeiro, People's Republic of China yuan, Hong Kong dollar, Iran rial, Philippines peso, Singapore dollar, Thailand baht (tical), and Venezuela bolivar

The Federal Reserve Bank of New York, pursuant to section 522(c), Tariff Act of 1930, as amended (31 U.S.C. 372(c)), has certified buying rates for the dates and foreign currencies shown below. The rates of exchange, based on these buying rates, are published for the information and use of Customs officers and others concerned pursuant to part 159, subpart C, Customs Regulations (19 CFR 159, subpart C).

Brazil cruzeiro:	
April 6–7, 1981	$0.013067
April 8–10, 1981	.012773
People's Republic of China yuan:	
April 6, 1981	$0.606061
April 7, 1981	.602446
April 8–9, 1981	.606686
April 10, 1981	.603682
Hong Kong dollar:	
April 6, 1981	$0.187231
April 7, 1981	.187441
April 8, 1981	.187564
April 9, 1981	.186898
April 10, 1981	.186776
Iran rial:	
April 6–10, 1981	Not available
Philippines peso:	
April 6–9, 1981	$0.129366
April 10, 1981	130548
Singapore dollar:	
April 6, 1981	$0.476417
April 7, 1981	.475285
April 8, 1981	.475737
April 9, 1981	.476077
April 10, 1981	.475511
Thailand baht (tical):	
April 6–9, 1981	$0.048379
April 10, 1981	.048193
Venezuela bolivar:	
April 6–10, 1981	$0.232883

(LIQ–03–01 O:C:E)

Dated: April 10, 1981.

KENNETH A. RICH,
Chief, Customs Information Exchange.

(T.D. 81–116)

The Federal Reserve Bank of New York, pursuant to section 522 (c), Tariff Act of 1930, as amended (31 U.S.C. 372(c)), has certified buying rates for the dates and foreign currencies shown below. The rates of exchange, based on these buying rates, are published for the

information and use of Customs officers and others concerned pursuant to part 159, subpart C, Customs Regulations (19 CFR 159, subpart C).

Argentina peso:	
April 13–16, 1981	$0. 000326
April 17, 1981	. 000325
Brazil cruzeiro:	
April 13–14, 1981	$0. 012773
April 15–17, 1981	. 012522
Chile peso:	
April 13–17, 1981	$0. 025667
People's Republic of China yuan:	
April 13, 1981	$0. 603682
April 14–15, 1981	. 599449
April 16–17, 1981	. 595309
Colombia peso:	
April 13–16, 1981	$0. 018932
April 17, 1981	. 018979
Greece drachma:	
April 13, 1981	$0. 018832
April 14–15, 1981	. 018904
April 16–17, 1981	. 018797
Hong Kong dollar:	
April 13, 1981	$0. 185960
April 14, 1981	. 186237
April 15, 1981	. 186463
April 16, 1981	. 185839
April 17, 1981	. 185529
Indonesia rupiah:	
April 13–17, 1981	$0. 001600
Iran rial:	
April 13–17, 1981	Not available
Israel shekel:	
April 13–14, 1981	$0. 107527
April 15–17, 1981	. 107991
Peru sol:	
April 13–17, 1981	$0. 002469
Philippines peso:	
April 13–17, 1981	$0. 130548
Singapore dollar:	
April 13, 1981	$0. 473821
April 14, 1981	. 472925
April 15, 1981	. 472813
April 16, 1981	. 473261
April 17, 1981	. 472144

South Korea won:
April 13, 1981 ..... $0.011330
April 14–17, 1981 ..... .001478
Thailand baht:
April 13–17, 1981 ..... $0.048193
Venezuela bolivar:
April 13–17, 1981 ..... $0.232883

(LIQ–03–01 O:C:E)

Dated: April 17, 1981.

KENNETH A. RICH,
Chief, Customs Information Exchange.

(T.D. 81–117)

Liquidation of Duties—Customs Regulations Amended

Section 159.34(a), Customs Regulations, relating to currency rates of exchange, amended

TITLE 19—CUSTOMS DUTIES

CHAPTER I—U.S. CUSTOMS SERVICE

PART 159—LIQUIDATION OF DUTIES

AGENCY: U.S. Customs Service, Department of the Treasury.

ACTION: Final rule.

SUMMARY: This document amends the Customs Regulations by adding Brazil, Hong Kong, Iran, People's Republic of China, Philippines, Singapore, Thailand, and Venezuela to the list of foreign countries whose currency is converted into equivalent U.S. currency and certified on a quarterly basis, rather than on a daily basis as is now the case. In so doing, Customs will eliminate the necessity of maintaining data and publishing a Treasury decision each week advising the public of the daily rates of exchange for the eight countries.

EFFECTIVE DATE: Effective upon publication in the Federal Register.

FOR FURTHER INFORMATION CONTACT: G. Scott Shreve, Duty Assessment Division, U.S. Customs Service, 1301 Constitution Avenue NW., Washington, D.C. 20229, 202–566–5307.

346-391 O - 81 - 4

SUPPLEMENTARY INFORMATION:

BACKGROUND

In accordance with 31 U.S.C. 372, it is necessary to convert foreign currency into equivalent U.S. currency for the purpose of assessing and collecting duties upon merchandise imported into the United States.

One method of conversion involves using certified quarterly rates of exchange for those countries listed in section 159.34(a), Customs Regulations (19 CFR 159.34(a)). For those countries, Customs publishes in the CUSTOMS BULLETIN, for the quarter beginning January 1, and for each quarter thereafter, the rate or rates first certified by the Federal Reserve Bank of New York for the respective foreign currency for a day in that quarter.

The certified quarterly rate of exchange is used for Customs purposes for any date of exportation within the quarter unless a certified daily rate, as determined by the Federal Reserve Bank of New York and certified to the Secretary of the Treasury, for the date of exportation varies by 5 percent or more from the certified quarterly rate. In that event, Customs publishes in the CUSTOMS BULLETIN a notice of the variation (popularly called a variance), and the rate certified on that date for the applicable country listed in section 159.34(a). The certified daily rate then is used for Customs purposes in connection with merchandise exported on that date.

However, a different procedure is used for the following eight countries: Brazil, Hong Kong, Iran, People's Republic of China, Philippines, Singapore, Thailand, and Venezuela.

The rates of exchange for those countries are converted and certified on a daily basis, rather than on a quarterly basis, as is the case for the countries listed in section 159.34(a). Therefore, in order to inform the importing community of the daily rates of exchange of these eight countries, it is necessary for Customs to publish a separate Treasury decision each week in the CUSTOMS BULLETIN.

After a periodic review of the daily rates of exchange for those eight countries, it became clear that their currencies fluctuate within 2 to 3 percent, that is, within the same 5-percent range as those countries listed on a quarterly basis in section 159.34(a). Therefore, it is appropriate to add the eight countries to the list of countries specified in section 159.34(a).

In so doing, Customs will eliminate the necessity of maintaining data and publishing a Treasury decision each week advising the public of the daily rates of exchange for the eight countries. The importing community will benefit because it will no longer be necessary to check the rates of exchange for the eight countries on a daily basis.

Rather, interested parties need only be apprised of whether there is a variance of 5 percent or more between the certified daily rate and the certified quarterly rate as is presently the case for the countries listed in section 159.34(a). Rates of exchange for countries not listed in section 159.34(a) may be obtained from the Federal Reserve Bank of New York by Customs upon special request.

This document amends the Customs Regulations by adding these eight countries to the list of countries specified in section 159.34(a), whose currency is converted into equivalent U.S. currency and certified on a quarterly basis.

INAPPLICABILITY OF PUBLIC NOTICE AND DELAYED EFFECTIVE DATE REQUIREMENTS

Because this is a minor technical amendment which relieves a burden on the importing community, and is not of particular interest to the general public, pursuant to 5 U.S.C. 553(b)(B), notice and public procedure thereon are unnecessary. Further, for the same reasons, good cause exists for dispensing with a delayed effective date under 5 U.S.C. 553(d).

INAPPLICABILITY OF REGULATORY FLEXIBILITY ACT

This document is not subject to the provisions of sections 603 and 604 of title 5, United States Code, as added by section 3 of Public Law 96–354, the "Regulatory Flexibility Act." That act does not apply to any regulation such as this for which a notice of proposed rulemaking is not required by the Administrative Procedure Act (5 U.S.C. 551 et seq.), or any other statute.

DRAFTING INFORMATION

The principal author of this document was Charles D. Ressin, Regulations and Information Division, Office of Regulations and Rulings, U.S. Customs Service. However, personnel from other Customs offices participated in its development.

AMENDMENT TO THE REGULATIONS

Section 159.34(a), Customs Regulations (19 CFR 159.34(a)), is amended by adding the following eight countries in appropriate alphabetical sequence to the list of countries for which the quarterly rate is certified: Brazil, Hong Kong, Iran, People's Republic of China, Philippines, Singapore, Thailand, and Venezuela.

(R.S. 251, as amended, sec. 624, 46 Stat. 759, sec. 522, 46 Stat. 739, as amended (19 U.S.C. 66, 1624, 31 U.S.C. 372))

WILLIAM T. ARCHEY,
Acting Commissioner of Customs.

Approved: April 24, 1981.

JOHN P. SIMPSON,
Acting Assistant Secretary of the Treasury.

[Published in the Federal Register, May 4, 1981 (46 F.R. 24944)]

U.S. Customs Service

Customs Service Decisions

DEPARTMENT OF THE TREASURY,
OFFICE OF THE COMMISSIONER OF CUSTOMS,
Washington, D.C.

The following are decisions made by the U.S. Customs Service where the issues involved are of sufficient interest or importance to warrant publication in the CUSTOMS BULLETIN.

DONALD W. LEWIS,
Director,
Office of Regulations and Rulings.

(C.S.D. 81-76)

Drawback: Some Requirements of the Principal-Agent Relationship Established by T.D. 55027(2) and T.D. 55207(1).

Date: February 27, 1975
File: DRA-1-09-R:CD:D GS 202452

MR. WILLIAM J. GRIFFIN,
Regional Commissioner of Customs,
Boston, Mass.

DEAR MR. GRIFFIN: This is in reply to your letter of January 31, 1975, concerning the audit of two drawback claimants.

For drawback to accrue under section 1313(b), a manufacturer must (among other things) use in the manufacture or production of articles both imported duty-paid merchandise and duty-free or domestic merchandise of the same kind and quality. Further, the manufacturer of the exported articles on which drawback is claimed must use in manufacture the imported duty-paid merchandise which is designated as the basis for the claim. It will be noted that the criterion is use, not ownership.

By T.D. 55057(2) and T.D. 55207(1) the concept of use was clarified to include manufacturing through agents. These Treasury decisions describe the principal-agent relationship in the following terms:

T.D. 55027(2) Substitution.—Imported merchandise which is owned by corporation A and furnished by that corporation to corporation B for use by the latter in the manufacture of products for the account of corporation A in accordance with the terms of its contract with corporation B, is used by corporation A within the meaning of section 313(b), Tariff Act of 1930, as amended, and may be designated by that corporation as the basis for the allowance of drawback on articles manufactured by it in compliance with the regulations under section 313(b). Bureau letter dated January 12, 1960. (731.1).

T.D. 55207(1) Substitution.—Articles manufactured by corporation C for the account of corporation A with the use of domestic merchandise owned by corporation A are manufactured by corporation A for the purposes of section 313, Tariff Act of 1930. There may be designated as the basis for drawback claims on such articles under section 313(b), as amended, imported merchandise which is owned by corporation A and is used by corporation B in the manufacture of articles for the account of corporation A, when the domestic merchandise used by corporation C and the imported merchandise used by corporation B are of the same kind and quality. See T.D. 55027(2). Bureau letter dated August 4, 1960. (731.1).

T.D. 55027(2), the older of these Treasury decisions, required a principal proposing to use this procedure to furnish merchandise which he owned to his agent, thus making it clear that a bona fide agency arrangement was contemplated. This follows from the fact that if the imported merchandise is not used by a valid agent of the principal, it cannot be said to have been used by the principal.

T.D. 55207(1) expanded T.D. 55027(2) to include the use of domestic merchandise. Once again a valid agency relationship was contemplated, because without it, the exported articles on which drawback was claimed could not be said to have been manufactured by the principal.

In the two cases you mention, although it is not specifically stated, it would appear that the imported wool was processed by the agents for the principals in full accordance with T.D. 55027(2). Thus it is only the procedure which was used with respect to the manufacture of the exported articles with the use of domestic wool which we need consider.

In the first case A company allegedly purchased wool matchings from B company. However in all respects (B company) continued to act as owner of the matchings. It processed them into wool top,

which top it contracted to sell to a Japanese company prior to the time it allegedly sold the matchings to A company and even billed the Japanese company for the wool top prior to billing A company for the matchings. In attachment A to your letter you outline the facts concerning the "sale" and we shall not repeat them in detail here.

In the second case (A corporation) allegedly sold grease wool to (B corporation) on May 25, 1974, but it also on the same date purchased from (B corporation) the wool top which had been or was to be produced form the grease wool. Here again, as is evident from the statement of facts in attachment B to your letter, the alleged seller, i.e. (A corporation)-acted as if it were the owner of the wool throughout the transaction.

In neither of the above cases do we believe there was a principal-agent relationship as required by T.D. 55027(2) and T.D. 55207(1). In each case there appears to have been an attempt to create a set of facts which would come within the scope of these two Treasury decisions. However, in each case the illusion of an agency relationship is destroyed by the fact that the actual processor of the exported articles operated in reality as the owner of the raw material and finished articles rather than as the agent of the owner. We therefore are of the opinion that in each of the cases the claimant has failed to establish that the exported articles were manufactured by the company which used in manufacture the imported wool designated as the basis for drawback on the claims. Accordingly, drawback should be denied in each instance.

We believe it appropriate to comment at this point with respect to the practice noted here of corporation A purchasing from corporation B domestic wool and then selling back to B the product made by B from the domestic wool. As noted earlier in this letter, T.D. 55027(2) and T.D. 55207(1) contemplated a bona fide agency relationship. Whether there is such a relationship must be determined on the basis of the facts in each case. However, when the facts disclose a transaction of the type described above between corporations A and B, we believe there is an inference that the initial sale was made in order to create a climate for the allowance of drawback rather than to create a valid principal-agent relationship. In such cases we believe additional evidence should be required to establish that there was in fact a valid principal-agent relationship.

We believe that other claims involving these four companies should be audited before being liquidated.

(C.S.D. 81-77)

Classification: Penpoint Assembly Consisting of Plastic Cone, Metal Ball, and Wick

Date: June 25, 1980
File: CLA-2:RRUCGC
062524 c

This ruling concerns the tariff classification of pen parts.

Facts.—The merchandise involved consists of an extended polyamide filament wick approximately 1 inch long, a molded plastic cone, and a small metal ball inserted in the plastic cone. These parts are to be incorporated into roller-ball pens which are classifiable under item 760.05, Tariff Schedules of the United States (TSUS). This office has previously held that this merchandise is classifiable, if the wick is incorporated into the ballpoint unit at the time of importation, under the provision for other parts for articles in item 760.05 and in item 760.40, TSUS, and dutiable at the rate of 1.8 cents each plus 12.5 percent ad valorem.

The inquirer requests that we reconsider our classification of this merchandise both with and without the wick. He maintains that in either case the merchandise is classifiable as other penpoints, in item 760.32, TSUS, and dutiable at the rate of 4.4 cents per gross.

Issue.—Whether the assembly, with or without the wick, is classifiable under the provision for other parts for articles, in item 760.05, in item 760.40, TSUS, or is classifiable under the provision for other penpoints, in item 760.32, TSUS.

Law and analysis.—One argument presented in the past for not considering the instant assembly as a penpoint within the purveiw of the provision for penpoints, in item 760.32, TSUS, is that the ball for a ballpoint pen is the penpoint for that type of pen and is provided for under the provision for balls for ballpoint pens and pencils, in item 760.34, TSUS. In this respect attention is directed to "*Webster's Third New International Dictionary*" which defines a ballpoint pen as "a pen having as the writing point a small steel ball that rotates in its socket and inks itself by contact with an inner magazine of ink.

The inquirer has submitted a letter from a Mr. Forrest F. Beck who is a member and past chairman of the Nomenclature Subcommittee of the Writing Instrument Manufacturer Association Test Methods Committee and who states the following:

> (1) Designation of a product as a "penpoint" infers a capability to deliver ink via a feed system from an ink reservoir to a writing surface.

(2) Neither a ball alone, or a housing alone, is capable of performing the normally recognized function of a penpoint. They must be present simultaneously as an assembly.

We note that not all penpoints deliver ink via a feed system. For example, a penpoint holder that uses a thin convex metal penpoint that is layered to a split point fitting does not function as stated above. In such an article the penpoint itself retains the ink in its cavity when dipped into an inkwell or similar container.

Regardless of how the penpoint receives its ink supply, it is our view that generally an essential characteristic of a penpoint is a capability of delivering ink to a writing surface. Noting that the assembly in issue imported without a wick would not have the capability of delivering ink to a writing surface it is our view that it is not classifiable under the provision for other penpoints, in item 760.32, TSUS.

The legislative history of the tariff provisions in issue which appears on page 407, "*Tariff Classification Study Explanatory Notes*," reads as follows:

> Item 760.32 provides for penpoints other than gold penpoints. This item combines three existing provisions of paragraph 351 under which pens of carbon or plain steel are dutiable at 10 cents per gross. Pens in part or wholly of other metal are dutiable at 14 cents per gross, and any of the foregoing pens with barrel and nib in one piece are dutiable at 10 cents per gross. In item 760.32, the three classifications have been combined and the rate of 10 cents per gross has been assigned thereto. It is believed that imports at the 14 cents per gross rate are negligible, and that the bulk of the imports have been dutiable at the 10 cents per gross rate.
>
> Item 760.34 provides for balls for ballpoint pens and pencils at the rate of $2 per thousand, plus 35 percent ad valorem. These balls are currently classified as parts of fountain pens, dutiable at 60 cents per dozen, plus 34 percent ad valorem. The ad valorem equivalent of this compound rate for balls is said to be in the neighborhood of 2,400 percent. In the Commission's interim report on this project, the tarriff status of balls for ballpoint pens was cited on page 46 as an example of an unintended anomaly in the form of an absolutely prohibitive rate of duty. In order to remove the anomalous result produced by the specific part of the existing rate (5 cents per each ball), the specific part of the proposed compound rate has been set at one-fifth cent per ball. The ad valorem part of the rate (34 percent) has been rounded out to 35 percent. The rate is expressed on a per thousand basis which is the usual unit of quantity for sales of such balls.

It is contended that the legislative history cited above precludes classification of the subject assembly under item 760.32, TSUS, inasmuch as ballpoint pens were not provided for in paragraph 351, Tariff Act of 1930, as amended, which is the predecessor provision to item 760.32, TSUS.

346-391 O - 81 - 5

It is to be noted that paragraph 351, Tariff Act of 1930, as amended, dealt with pens made of carbon, or plain steel, or other metal rather than with penpoints or pen parts. Consequently, we cannot view the cited legislative history as mandating classification of the penpoint assembly under item 760.40, TSUS.

In addition, we find nothing in the legislative history of the provisions involved which warrants the interpretation that the provision for balls for ballpoint pens, in item 760.34, TSUS, covers penpoints for ballpoint pens. As stated before, the term "penpoint" infers a capability to deliver ink to a writing surface. This capability is not possessed by the metal ball alone. For this reason we believe that the assembly in issue with the wick incorporated into the ballpoint unit constitutes a penpoint.

Holding.—The assembly consisting of a plastic cone, metal ball, and a wick incorporated therein is classifiable under the provision for other penpoints, in item 760.32, TSUS. The same assembly without the wick is classifiable under item 760.40, TSUS.

(C.S.D. 81-78)

Classification: Whether Fabric Labels on Women's Overalls Constitute Ornamentation

Date: June 29, 1980
File: CLA-2:RRUCGC
064320 PR

This is in reply to your letter of January 10, 1980, concerning the tariff status of certain garments with a particular label attached. The garments are women's short overalls which you state are known as shortalls.

No sample was submitted. However, drawings of the garments to be imported accompanied your letter together with a sample of the label to be used. The garments are overall-like garments with legs that end slightly below the crotch area. According to the drawings, each garment has a large patch pocket on the bib portion, two front slash pockets, a front fly, two rear patch pockets, and suspenders. A label will be centered on the bib patch pocket and also at the juncture of the suspender straps on the rear of the garment. The rectangular-shaped black fabric label is approximately 2½ inches by 1¼ inches. All the words on that label are spelled out in plain block gold-colored capital letters as follows: (1) The first line contains the word "Washington" in letters approximately five-sixteenths inch high; (2) the second line contains the words "Dee Cee" in letters approximately three-sixteenths inch high; and (3) line three contains the words "by Washington Mfg. Co." in letters one-eighth inch high.

Since no sample of the merchandise to be imported was submitted, this ruling is applicable only with regard to whether the labels on the described garment constitute ornamentation. Considering the size and styling of the garment, the size of the labels, and the fact that more than one label is attached to the garment, the garment will be classified under the ornamented provisions of the tariff schedules, under the provision for other women's or girls' ornamented wearing apparel, of cotton, in item 382.00, Tariff Schedules of the United States (TSUS), with duty, depending on the country of origin, either at the column 1 rate of 35 percent ad valorem or at the column 2 rate of 90 percent ad valorem. Products of those countries listed in general headnote 3(e), TSUS, copy enclosed, are dutiable at the column 2 rates of duty. Products of all other countries are dutiable at the column 1 rates of duty.

(C.S.D. 81-79)

Classification: Tobacco Stems Returned Under Separate Package

Date: July 18, 1980
File: CLA-2:RRUCSC
064639 AI
063440
063328
038641

This is in reply to your letter of March 17, 1980, regarding the classification of tobacco stems resulting from a stemming operation performed in the Dominican Republic under the provisions of item 806.20, Tariff Schedules of the United States (TSUS).

You state that the stems resulting from the stemming process generally remain whole (bayonet type) and in this condition are bulky, difficult to handle, and require special packaging. In effect, you want to return part of a complete article exported for alterations under item 806.20, TSUS, separately, and under a different provision of law.

It is not disputed that the tobacco was orginally exported as full leaves for the purpose of undergoing the stemming operations. The stemming operation has consistently been held an alteration under item 806.20, TSUS.

The tobacco leaves in the present case were sent abroad for alteration. The exporter may not sever the article, claiming that only part of it has been altered and obtain duty-free entry of the other part claiming that it has not been improved in condition or advanced in value. The ramifications of allowing entry under this procedure obviously contradict the intention of the exemption. Under this pro-

cedure, a complex and valuable article could be exported to undergo repairs or alterations. Once altered, the article could be severed, however artificially, into parts which have obviously been altered and parts which allegedly have not, with only the former being subject to duty. Preventing such segregation was the object of headnote 2(c), subpart B, part 1, schedule 8, which states that the proper basis for assessing duty is the rate applicable to the entire article.

> The duty upon the value of the change in condition shall be at the rate which would apply to the article itself, as an entirety, without constructive segregation of its components, in the condition as imported if it were not within the purview of this subpart * * *

The same article must be exported and returned. The only divergences allowed under item 806.20, TSUS, are those resulting from the repairs and alterations. Thus, if a new article is produced (*A. D. Deringer, Inc.* v. *United States*, 385 F. Supp. 518) or if the article is sent abroad to undergo repairs or alterations but actually undergoes more than repairs or alterations (*U.S.* v. *Merkowitz*, Abstract 40592 (1943)) it may not return under item 806.20, TSUS.

It is clear from the language of the provision, and from its legislative history, that item 806.20, TSUS, is applicable only to importations where the imported goods can be readily identified as the same articles, though repaired or altered, as those exported.

In order to aid this identification, section 10.8, Customs Regulations, has been promulgated. This section prescribes strict procedures whereby the articles are registered at the time of exportation (sec. 10.8(a)) and the person performing the repairs or alterations declares that the articles were received by him for the sole purpose of performing the repairs or alterations, and that no substitution of other articles has been made (sec. 10.8(e)).

Accordingly, the leaves and stems of the stemmed tobacco must be returned together in the same shipment under item 806.20, TSUS, in compliance with section 10.8, Customs Regulations.

(C.S.D. 81-80)

Vessels: Denial of Remission of Duties Assessed Under 19 U.S.C. 1466 on Foreign Repairs Resultant of a Single Act of Negligence

Date: August 25, 1980
File: VES-13-15/
VES-13-18-RRUCDC
104542 PH

This is in reference to the petition for partial review of the district director's decision in denying relief from vessel repair duties assessed

on repairs performed abroad on the (vessel name). The vessel was repaired in Japan between the dates of October 28, 1978, and February 23, 1979. A vessel repair entry (No. 134621) was filed on March 12, 1979, when the vessel arrived in San Francisco. An application for relief from vessel repair duties was filed, pursuant to section 4.14(e), Customs Regulations, with you on April 18, 1979. By memorandum VES–13–O:CV:LIQ LC dated July 11, 1979, you requested our advice concerning that application. In response, we ruled (ruling letter VES–13–18–R:CD:C 104098 JL, Aug. 27, 1979) that: (1) The cost of foreign repairs precipitated by the negligent acts of a second assistant engineer, an officer, is not subject to remission under 19 U.S.C. 1466(d)(1), and (2) repairs to the vessel's boilers accomplished prior to November 9, 1978, were ineffective and of no value to the vessel and, accordingly, are not dutiable as repairs.

The owner of the vessel, through counsel, has filed a petition under section 4.14(k), Customs Regulations, seeking review of that portion of our ruling which held a second assistant engineer to be an officer and the cost of foreign repairs precipitated by his negligent acts not to be subject to remission under 19 U.S.C. 1466(d)(1).

The underlying facts are not in dispute. The facts pertinent to this petition, as stated in our earlier ruling, are as follows:

> The second assistant engineer improperly transferred fuel from the double bottom tanks to the port settler in that he improperly shifted the manifold valves so that fuel was allowed to move from the starboard settler back to the double bottom fuel tanks. This in turn caused the starboard settler tank to run dry which caused both boiler fires to go out for lack of fuel. It is alleged that at that point the second assistant engineer should have shut down the main engine throttle in order to prevent the vessel's automatic combustion control from opening the forced draft air vents. This omission resulted in a blast of cold air being introduced into the boilers which were then at their full steaming temperature of approximately 2,000° to 3,000° Fahrenheit. This resulted in a thermal shock which caused the generating tubes to shrink, which in turn allegedly caused fractures and severe leaks.
>
> It is also alleged that the second assistant engineer in failing to shut down the vessel's evaporators following the loss of the boiler fires allowed vacuum to be created by the loss of steam pressure which in turn pulled seawater through the condenser tubes into the boiler feed water tank. It is claimed that this seawater contaminated the feed water system and when an attempt was later made to relight the boilers and bring them on line, salt contamination and other deposits were left in the superheater tubes. It is alleged that these deposits in the superheater tubes interfered with the normal cooling process of the system thus causing overheating and subsequent failure of superheater tubes in the boilers.

> Petitioner claims that the second assistant engineer was on his first voyage aboard the vessel and it was the first time that he had sailed for the company. His capacity was that of a relief engineer and the company states that it had no prior opportunity to observe his competence or diligence. Petitioner claims that the company was unable to exercise any discretion or control in employment of the second assistant engineer because under the terms of its collective bargaining agreements it must accept any man dispatched from a union hiring hall, provided he is equipped with a valid U.S. Coast Guard license. The company's position is therefore that the negligence of the second assistant engineer was neither foreseeable nor avoidable.
>
> The petitioner does state, however, that at all times the second assistant engineer was in control of the relevant equipment and should have, but did not, operate the equipment properly.

The petitioner does not disagree with our statement of the rule as to negligence in vessel repair cases. (quoted from ruling letter VES-13-02-R:CD:C 103358 JL, April 28, 1978) as being:

> (a) single act of negligence on the part of an ordinary crewmember is tantamount to a casualty; whereas the negligence of a responsible member of the crew, or crewmembers' neglect over an extended period of time is not to be consider a casualty within the meaning of 19 U.S.C. 1466(b)(1) (since redesignated as sec. 1466(d)(1)).

The petitioner accepts this rule for determining whether negligence should be a grounds for remission in vessel repair cases. However, he disagrees with our determination, based upon 46 U.S.C. 224a(3), that a licensed second assistant engineer is an officer rather than an ordinary crewmember and acts of negligence on his part are not considered casualties under 19 U.S.C. 1466. (Sec. 224a(3) of title 46 provides for the licensing of officers, including assistant engineers.) The petitioner proposes that a crewmember's status as a responsible member of the crew should depend upon a case-by-case factual analysis. In particular, the petitioner contends that the role of a second assistant engineer "does not justify an automatic presumption that his conduct is always the type that is authorized by the owner of the vessel, that the owner of the vessel could reasonably have become aware of his level of competence (especially on his first voyage), or that his negligence should for any reason be imputed to the owner." The petitioner concludes by contending that the second assistant engineer's negligence can in no way be imputed to the owner of the vessel, or to its chief officers.

In our review of this matter we have found several authorities, in addition to 46 U.S.C. 224a(3), to support our ruling that a second assistant engineer is a responsible member of the crew of a vessel. In *Alpha Steamship Corporation, et al.* v. *Cain*, 281 U.S. 642 (1930),

the Supreme Court imputed to the owner of a vessel the negligence of a second assistant engineer in striking a fireman and causing injury.

In a ruling letter to the Collector of Customs, Los Angeles (212.6, June 8, 1949), the Acting Commissioner of Customs stated:

> [t]he officers of the vessel are considered to have control of the ship at all times and negligence on their part is not considered by the Bureau to be a casualty within the purview of section 466 of the tariff act.

The negligence under consideration was on the part of "* * * the third engineer of the vessel in furnishing incorrect advice to the chief engineer".

Section 1466 is a protective tariff intended by the Congress to reserve to U.S. shipyards those repairs and equipment purchases made by U.S. vessels. Customs interprets section 1466 to give the widest possible effect to its protective provisions. 33 Op. Atty. Gen. 432. It is our opinion that our application of section 1466 in this case is consistent with the intent of section 1466.

We have reviewed the file and considered the petition submitted on behalf of the vessel owner. Based upon the authorities discussed in this letter, we affirm ruling letter VES–13–18–R:CD:C 104098 JL, dated August 27, 1979. Please advise the petitioner of our decision.

(C.S.D. 81–81)

Drawback: Commingling of Foreign and Domestic Orange Juice Concentrates as a Manufacturing Process for Drawback

Date: September 4, 1980
File: DRA–1–R:CD:D NK 210693

Issue.—Whether the blending (or commingling) of imported concentrated orange juice for manufacturing with another orange concentrate to change the degree brix of the imported concentrate constitutes a manufacturing process for drawback.

Facts.—A processor imports concentrated organge juice of 65° brix that meets the standard of identity of the Food and Drug Administration and the grade A standard of quality of the U.S. Department of Agriculture for concentrated orange juice for manufacturing (21 CFR 146.153 and 7 CFR 2852.2222).

The processor proposes to blend (or commingle) the imported concentrate with another orange concentrate of 58° brix that also meets

the same standards of identity and quality as the imported concentrate to produce a concentrate of 61.6° brix.

Law and analysis.—Under the substituted drawback law (19 U.S.C. 1313(b)), the imported merchandise must be of the same kind and quality as the substituted domestic merchandise and used in the manufacture of articles. New and different articles of commerce must emerge from the manufacturing process.

The two concentrates described, although differing slightly in degree brix, are used interchangeably by the citrus industry in the manufacture of other orange juice products and meet the same kind and quality requirements of the drawback law.

Thus, the mere blending or commingling of one concentrate with another concentrate of the same kind and quality does not constitute a manufacturing process for drawback.

Alternatives.—Concentrated orange juice for manufacturing of approximately 65° brix may lack essential oils and flavoring components necessary to meet the needs of a customer of a processor, such as a dairy, to prepare a salable reconstituted juice by merely mixing the concentrate with water. The addition by a blending process of essential oils and flavoring components to a concentrate that lacks them would be considered a manufacture or production for drawback. Such a manufacturing process may be used to control the desired degree brix of a concentrate.

The use of fresh juice to cutback the degree brix of concentrated orange juice for manufacturing is another manufacturing process for drawback.

Holding.—The mere blending (or commingling) or concentrated orange juice for manufacturing with another concentrate of the same kind and quality to change degree brix is not a manufacturing process for drawback.

(C.S.D. 81–82)

Warehouse: Liability for Duties on Stolen Merchandise

Date: September 5, 1980
File: WAR–1–RRUCDB
211651 WR

Issue.—Whether the consignee of warehoused merchandise or the proprietor of the bonded warehouse in which the merchandise is stored is liable for the payment of duty on that merchandise if the merchandise is stolen from the warehouse?

Facts.—No facts were presented.

Law and analysis.—Under section 483, Tariff Act of 1930, as amended (19 U.S.C. 1483), the consignee is considered to be the owner of imported merchandise. Section 484, Tariff Act of 1930, as amended (19 U.S.C. 1484), requires the consignee to make entry. Section 505, Tariff Act of 1930, as amended (19 U.S.C. 1505), implies that it is the responsibility of the consignee to pay the required duties. Section 557, Tariff Act of 1930, as amended (19 U.S.C. 1557) clearly imposes an obligation to pay any duty due on withdrawal on the person who has a right to withdraw warehoused merchandise. Sections 101.1(K), 141.20, and 144.31, Customs Regulations (19 CFR 101.(K), 141.20 and 144.31), implement these statutes by clearly stating that the importer of record, the actual owner (if a superseding bond and declaration is filed), or a lawful transferee of the right to withdraw warehoused merchandise is the person who is primarily liable for the payment of duty on warehoused merchandise.

In order to secure performance of that obligation, the relevant bond forms such as the Warehouse Entry Bond (Customs form 7555), the General Term Bond For Entry Of Merchandise (Customs form 7595), and the Superseding Bond (Customs form 7595) contain an agreement to pay lawful duty due on warehoused merchandise.

Under section 555, Tariff Act of 1930, as amended (19 U.S.C. 1555), the owner or lessee of a bonded warehouse is required to give a bond to secure the Government against any loss or expense connected with or arising from the deposit, storage, or manipulation of merchandise in the warehouse. The Proprietor's Warehouse Bond (Customs form 3581) prohibits the removal of any merchandise from the warehouse except under a lawful permit and in the presence of a Customs officer. If there is a breach of that condition, the proprietor agrees to pay any duty, tax, and charge due on the unlawfully removed merchandise. If the duty on the removed merchandise cannot be established, the bond sets a liability for liquidated damages of up to $500 on each removed package. It is clear that the bond language merely follows the dictates of 19 U.S.C. 1555. That is, if merchandise is missing from a warehouse, and the circumstances are such that the Government would suffer a loss of duty as a result, the properietor is responsible for making good on the loss. Nevertheless, the primary responsibility to pay any duty due remains with the importer, actual owner, or transferee, as the case may be. If the amount of the loss is known, as in the case of missing merchandise on which the duty has been ascertained, then the warehouse propietor's liability is measured by that amount. If the amount of loss is unknown, as in the case of missing merchandise on which the duty has not been ascertained, it would be extremely difficult for the Government to prove the amount of the loss suffered. In order to avoid this difficulty, the bond provides

for liquidated damages. This bond language has been unchanged since at least as early as March 1955.

A comparison of the bond guarantees to pay duty in Customs forms 7555, 7595, and 7601 with the provision to pay duty in Customs form 3581 indicates that the latter is in reality more in the nature of damages for a failure to properly perform rather than an obligation to pay duty. Duty is imposed by reason of importation and accrues on importation, as provided in section 141.1, Customs Regulations (19 CFR 141.1). The wording of Customs form 3581 regarding the obligation to pay duty is unrelated to the event of importation; the obligation to pay arises only if the proprietor fails to properly keep the merchandise in the warehouse.

The decision in C.I.E. 686/59 of May 4, 1959, correctly states the different obligations of an importer who warehouses merchandise and the warehouse proprietor. It is true that the provision in Customs form 3581 imposes a liability to pay damages for a loss even though the loss or theft was not due to the fault of the proprietor. In C.I.E. 686/59 Headquarters determined, as a matter of policy, not to enforce that provision unless there was a showing of negligence by the warehouse proprietor. Because the file on C.I.E. 686/59 could not be found, we are unable to determine whether the importer of record paid the duty on the missing merchandise. The text of the decision suggests that the importer of record was able to pay the duty so that, if so paid, there was no loss to the Government within the meaning of 19 U.S.C. 1555.

The decision in Manual Supplement 3260–03 is not contrary to the decision in C.I.E. 686/59. As stated in the first paragraph under the heading "background" the Manual Supplement concerns the warehousing of distilled spirits which are treated differently than all other commodities. By virtue of the act of June 8, 1948, Public Law 612, the substance of which is set forth in headnote 3, part 12, schedule 1, Tariff Schedules of the United States (TSUS) (19 U.S.C. 1202), distilled spirits have been given a favored position with respect to payment of duty. Duty is payable only on the quantity withdrawn from the warehouse for consumption. For all other warehoused merchandise, duty is payable on the quantity entered into the warehouse. Thus, in the case of distilled spirits, the obligation of an importer to pay duty does not accrue on importation. As a statutory exception to 19 CFR 141.1, an importer of distilled spirits is not liable for the payment of duty on spirits that are missing from the warehouse. However, there is a loss to the Government, and that loss is covered by the bond of the warehouse proprietor. Because Manual Supplement 3260–03 concerns a uniquely favored commodity, it does not have general application.

Holding—The decision set forth in C.I.E. 686/59 is affirmed. A consignee, actual owner, or transferee as the case may be, is primarily liable for the payment of duty on warehoused merchandise. The decision in Manual Supplement 3260–03 applies only to the circumstances and merchandise involved.

(C.S.D. 81–83)

Classification: Shoe Bottoming Machine and Molds Classifiable Under Items 678.10 and 680.11, TSUS, Respectively

Date: September 7, 1980
File: CLA–2:RRUCGC
064414 JCH

This is in further response to your letter of January 23, 1980, in which you requested information on the dutiable status of various models of shoe bottoming machines produced by (company name) a West German manufacturer. In a previous ruling dated March 24, 1964 (T.D. 56190 (184), 99 Treas. Dec. 347), we held that the (company name) automatic bottoming machine was classifiable under the provision for shoe machinery in item 678.10, Tariff Schedules of the United States (TSUS), which carries a free rate of duty.

You currently requested extension of the free rate of duty to (name) models 701, 702, 703, 704, 711, 712, 713, 714, 721, 722, 723, 724, 725, 726, 752, 521, 522, 523, 524, 525, and 526. All of these models are similar to the 701 in that they incorporate lasts and last carriers for the direct soling of uppers, thereby, producing complete footwear. They are also multistation rotary machines with as many as 12 stations. However, it is not clear from the literature provided whether the models which are available with as few as two stations are also rotary types.

The model 702 differs from the 701 in that it has the capability for molding a toe cap. The 703 and the 704 primarily differ in that they can perform bicolored molding. The 752 is a simpler semiautomatic machine which can use single wood or plastic lasts. These machines use an extruder or reciprocating screw injection and are primarily for use with PVC plastics. The models 711 through 714 offer similar options and are primarily for rubber injection molding.

Models 721 through 726 have programmable memory control systems and are also for molding PVC and other thermoplastics. Model 520 through 526 are similar machines for use with polyurethane.

It is our opinion that the described machines are specially adapted to the production of footwear by virtue of the lasts and last carriers.

Accordingly, they are a class or kind of machine chiefly used in the production of footwear and entitled to a free rate of duty under item 678.10. In view of this classification, the molds used with the machines for making footwear are also entitled to a free rate of duty under the provision for shoe machinery molds in item 680.11, TSUS.

(C.S.D. 81–84)

Classification: Injection Molding Machines for Shoe Manufacture and Component Molds Classifiable Under Items 678.10 and 680.11, TSUS, Respectively

Date: September 8, 1980
File: CLA-2:RRUCGC
064512 JCH

This is in further response to your letter of February 25, 1980, concerning the tariff classification of the (company name) injection molding machine. In our previous correspondence in this matter dated February 14, 1975, as amended by our letter of April 19, 1977 (file No. 036567), we classified the machine under the provision for machines for molding or otherwise forming rubber or plastic articles in item 678.35, Tariff Schedules of the United States (TSUS), and classified the molds under the provision for molds used for rubber or plastics in item 680.12, TSUS. You now request a reconsideration of this matter and claim the molding machine and the molds are entitled to free rates of duty under the provisions for shoe machinery in item 678.10. TSUS, and shoe machinery molds in item 680.11, TSUS.

You describe the (device) as a two-station molding machine which plasticizes solid or expandable thermoplastic rubber, PVC, and other compounds. It also has a two color capability. You state that the process involves production of complete footwear in one operation. The machine incorporates lasts and last carriers.

In our decision rendered on Internal Advice Request No. 138/75, Supp. 1 (file No. 040567), we reviewed the factors which should be considered in determining eligibility for duty-free entry under item 678.10. It was our decision that duty-free entry would be accorded under this provision to machines which have special features or mechanisms which set them apart from general purpose plastic injection molding machines and preclude their use in the United States in the production of articles other than shoes and parts thereof. It is now our opinion that lasts and last carriers, such as those on the (machine), constitute features which specially adapt the machine to the primary use in the United States for the manufacture of footwear. These machines are to be regarded as a class or kind of merchandise separate from machines which do not have such features and which may be used for general injection molding purposes.

best copy available

Accordingly, our previous ruling, as amended, is hereby revoked, and the (machine) will be classified, in accordance with the views set forth above and in the cited internal advice decision, under item 678.10. The molds for the machine will also be accorded duty-free treatment under item 680.11. However, any liquidations of the (machine) or of molds for it in accordance with the revoked ruling which have become final will not be affected by this decision.

(C.S.D. 81-85)

Vessel Stores, Supplies, and Equipment: Withdrawal of Supplies by One Vessel for Use by Another Vessel

Date: September 15, 1980
File: CON-13-01:RRUEE
712953/713478 BM

This ruling concerns whether fishing vessels on the high seas are entitled to the duty-free exemption for vessel supplies under section 309 of the Tariff Act of 1930, as amended, when such supplies are withdrawn for their use by a supply vessel.

Issue.—Are Japanese fishing vessels located on the high seas entitled to section 309 vessel supplies which were withdrawn for their use by a supply vessel?

Facts.—In the past, each Japanese fishing vessel would call at the U.S. port of entry involved and would withdraw duty-free for its own use supplies, such as liquor, food stuffs, and fuel, pursuant to section 309 of the Tariff Act of 1930, as amended. A Japanese fishing consortium has now outfitted two supply vessels whose sole purpose is to take supplies to these fishing vessels. This will enable the Japanese fishing vessels to remain on the high seas for longer periods of time.

The District Director of Customs at the port of entry involved believes that the Japanese fishing vessels should not be entitled to such duty-free supplies because: (1) These supplies were taken out of the United States onboard the supply vessel as cargo, (2) the fishing vessels are located on the high seas, and therefore, in the opinion of the district director, since the transfer takes place outside of the United States, such transfer is outside of the jurisdiction of section 309 of the Tariff Act, and (3) Customs at the port of departure does not know the amount of supplies that are being withdrawn for each vessel.

Law and Analysis.—Section 309 of the Tariff Act of 1930, as amended (19 U.S.C. 1309), in pertinent part, provides that supplies

346-391 O - 81 - 6

for vessels employed in the fisheries or actually engaged in foreign trade may be withdrawn duty-free.

T.D. 49815(4), in effect, provided that supplies on one vessel may be withdrawn under section 309 of the Tariff Act of 1930, as amended, and the pertinent Customs Regulations, for supplies of another vessel engaged in a proper class of trade. In this connection, we have ruled that a vessel engaged in foreign trade may withdraw supplies, not only for itself, but for another vessel engaged in foreign trade. Also, a fishing vessel has been authorized to withdraw supplies for another fishing vessel.

Customs has ruled that lightering vessels carrying merchandise from a port of the United States to a place outside of the United States, even if it be to a vessel on the high seas, are engaged in foreign trade and therefore entitled to withdraw duty-free supplies for themselves under section 309 of the Tariff Act. (See ORR Rulings 712892 BM dated June 4, 1980, 305065 BM dated Dec. 8, 1977, and 304866 BM dated Sept. 12, 1977). In the latter two rulings mentioned, Customs stated that super tankers located on the high seas, or even off the coast of Panama, would be entitled to such supplies, withdrawn on their behalf by the lightering vessels involved.

In each instance, the lightering vessels at time of withdrawal provide Customs with documentation setting forth the amount of supplies that are withdrawn for themselves and the amount withdrawn for the super tankers located on the high seas. If for some reason the amount of supplies delivered to the super tankers deviates from the amount provided to Customs at the time of withdrawal, Customs at the port of departure is subsequently informed by the submission of a document certified by the master of the vessel on the high seas as to the actual amount received, The Japanese fishing consortium, in this case, has informed us that they are able to provide Customs at the time of withdrawal with the statement of the eligible fishing vessels which will be receiving the supplies and the amount of supplies intended to be received by each. Subsequently, any deviations from the intended disposition will be submitted to the district director at the port of departure. In addition, statements by the master of each individual vessel certifying the amount of supplies received and consumed on each eligible vessel will be provided.

Customs has thus permitted a vessel engaged in foreign trade to withdraw bonded supplies under section 309 of the Tariff Act for another vessel engaged in foreign trade, take the bonded supplies out to that vessel on the high seas, and there transfer such supplies to that vessel, provided at the time of withdrawal Customs is informed as to the quantity of merchandise being received by the vessel on the high seas. We do not see any reason why this same procedure should not also be permitted for fishing vessels.

However, in this instance, we have two additional circumstances. First: The initial vessel is withdrawing supplies for more than one additional vessel. The main criterion in these cases is that Customs is informed for whom the supplies are being withdrawn at the time of withdrawal. For example, if the initial vessel is withdrawing supplies for 12 vessels and Customs is aware that all 12 vessels qualify and is informed at the time of the withdrawal of the amount each is receiving, this is sufficient.

Second: In each instance where Customs has permitted one vessel to withdraw supplies for another, the vessels involved have been of the same class. For example, a vessel engaged in foreign trade has been permitted to withdraw supplies for another vessel engaged in foreign trade; a fishing vessel has been permitted to withdraw supplies for another fishing vessel. In this instance, we have a vessel engaged in foreign trade withdrawing supplies for fishing vessels.

A careful review of the applicable statutes, regulations, and relevant rulings reveals no law or policy reason prohibiting the transfer of bonded supplies from a vessel engaged in foreign trade to a fishing vessel or vessels. In fact T.D. 49815(4) provides that supplies of one vessel may be withdrawn for supplies of another "engaged in a proper class of trade," and appears to us to be broad enough to cover this situation. We believe the latter rulings covering transfer of supplies under section 309 of the Tariff Act happened to involve vessels of like category. We believe that it is sufficient if the vessels involved are entitled to bonded supplies under section 309 of the Tariff Act.

Holding.—The Japanese fishing vessels located on the high seas are entitled to section 309 vessel supplies which were withdrawn for their use by a supply vessel, provided Customs is informed at the port of departure as to the quantity each vessel will be receiving. The supply vessel, itself, is entitled to section 309 vessel supplies for its own use since it is considered to be engaged in foreign trade.

(C.S.D. 81-86)

Transaction Value: Dutiability of Quota Payments

Date: September 18, 1980
File: CLA-2:RRUCV
542169 TLL
TAA #6

This is in reply to your letter dated June 30, 1980, concerning the dutiability of certain quota payments under section 402 of the Tariff Act of 1930, as amended by the Trade Agreements Act of 1979.

You have asked about the dutiability of quota payments in the following three circumstances. First the quota is purchased by either the manufacturer or importer from an unrelated third party. The importer will then place a second purchase order with the quota holder at a sum which reflects the original contract price of the goods to the manufacturer plus a sum for the quota. The quota holder becomes the shipper on the documentation. A letter of credit is opened by the importer to the shipper at that higher amount and the shipper, in turn remits moneys representing the original contract price directly to the manufacturer for payment of the goods, receiving written proof of payment, therefore retaining the remainder as quota charge.

In the second circumstance, the manufacturer essentially prepays the quota and passes the quota charge along to the importer.

The third type of transaction is one in which the importer purchases its own quota from a party unrelated to it or the manufacturer.

You submit that none of the payments made by the importer constitutes dutiable value for the imported merchandise. We agree with your conclusions where the quota payments are made to an unrelated third party and where they are made by the buyer to the quota holder who is unrelated to either the buyer or the seller; however, with regard to the situation where the quota payments are prepaid by the manufacturer, it is our position that such payments are part of the price actually paid or payable for the imported merchandise. See section 402(b)(4)(A), wherein it is stated:

> (A) The term "price actually paid or payable" means the total payment (whether direct or indirect, or exclusive of any costs, charges, or expenses incurred for transportation, insurance, and related services incident to the international shipment of the merchandise for the country of exportation to the place of importation in the United States) made, or to be made, for imported merchandise by the buyer to, or for the benefit of, the seller.

In this regard, it is the position of the Customs Service that all moneys paid to the foreign seller are part of the price actually paid or payable for the imported merchandise. Thus, even if the seller is prepaying expenses on behalf of the buyer, those expenses which are then reimbursed by the buyer to the seller will be treated as being part of the price actually paid or payable of the imported merchandise.

(C.S.D. 81–87)

Value: Proper Method of Invoicing To Insure Bona Fide Buying Commissions Remain Nondutiable

Date: September 29, 1980
File: CLA–2:RRUCV
542141 BG
TAA #7

DEAR ———: This is in response to your letter, dated May 27, 1980, in which you request a ruling as to the proper method of invoicing in order to insure that bona fide buying commissions will remain nondutiable under section 402, Tariff Act of 1930, as amended by the Trade Agreements Act of 1979.

The specific situation for which you request a ruling occurs when, as a matter of convenience, a commercial invoice (and Special Customs Invoice) designates the buying agent as the seller of the merchandise. This situation most frequently occurs when the importation involves shipments from several manufacturers which are coordinated and consolidated by a single buying agent. You request that, under the new value law, Customs continue to allow a bona fide buying commission to be deducted from transaction value notwithstanding the fact that a Special Customs Invoice and/or commercial invoice designates the agent as the seller.

Transaction value, which is the primary basis of appraisement under section 402, Tariff Act of 1930, as amended by the Trade Agreement Act of 1979, is defined as the price actually paid or payable for the merchandise when sold for exportation to the United States, plus amounts for the items specifically enumerated in section 402(b)(1). Although selling commissions are one of the items so listed, buying commissions are not included as an item to be added to the price paid or payable. The term "price actually paid or payable" is defined in section 402(b)(4)(A) as:

> The total payment (whether direct or indirect, and exclusive of any costs, charges, or expenses incurred for transportation, insurance, and related services incident to the international shipment of the merchandise from the country of exportation to the place of importation in the United States) made, or to be made, for imported merchandise by the buyer to, *or for the benefit of, the seller.* [Italic added.]

It is clear from the statutory language that in order to establish transaction value one must know the identity of the seller and the

amount paid or payable to him. If the documentation submitted with the entry papers only reflects the purported agent as the seller, Customs has no alternative but to appraise on the basis that the agent is the seller.

Therefore, an invoice or other documentation from the actual foreign seller to the agent would be required to establish that the agent is not a seller and to determine the price actually paid or payable to the seller. Furthermore, the totality of the evidence must demonstrate that the purported agent is in fact a bona fide buying agent and not a selling agent or an independent seller.

While the designation on the Special Customs Invoice is normally considered as evidence of the relationship between the parties, the fact that a purported agent is listed as the seller on the Special Customs Invoice does not necessarily preclude a finding of a buying agency relationship as long as the evidence taken as a whole substantiates such a finding. It should be noted, however, that in both the rulings cited by counsel where Customs has found a buying agency in such situations (R:CV:V RP 061373, dated Aug. 13, 1979, and R:CV:V JAS 541609, dated Jan. 30, 1978), the commercial invoice or the body of the Special Customs Invoice reflected the actual seller of the merchandise. In addition, the totality of circumstances supported the conclusion that the agent was in fact a bona fide buying agent and not an independent seller or the manufacturer's representative.

Under transaction value it is essential that the entry papers reflect the actual seller in order to establish the price actually paid or payable. Accordingly, while a buying agent may be designated as a seller on the Special Customs Invoice as a matter of convenience, an invoice or other documentation must be submitted with the entry papers which reflects the actual seller of the merchandise and the price paid or payable to him. In addition, the totality of the evidence must establish that the agent is in fact a bona fide buying agent.

It is also important to note that while buying commissions cannot be added to the price paid or payable, neither may they be deducted. If the price paid or payable includes a buying commission, it is our opinion that there is no statutory authority for deducting the commission from the price. Therefore, the documentation, which should reflect the facts as they exist, may under the appropriate circumstances show a separate transaction with respect to the buying agent commission.

We hope that these comments will clarify for you the invoicing procedures to be used where a transaction involves a bona fide buying agent. Due to the insufficient detail regarding the prospective transaction, we note that our comments must be of an advisory nature. The actual determination as to the valuation of the imported mer-

chandise will be made by the appraising officer at the port of entry where the merchandise is entered.

(C.S.D. 81–88)

Warehouse Withdrawal: Merchandise Withdrawn and Admitted Into a Foreign-Trade Zone

Date: October 3, 1980
File: FOR–1–02–RRUCDB WR 212021

Issue.—Whether merchandise in a Customs bonded warehouse may be withdrawn from that warehouse and admitted into a foreign-trade zone in other than zone-restricted status?

Facts.—No facts were presented.

Law and analysis.—Section 557(a), Tariff Act of 1930, as amended (19 U.S.C. 1557(a)), provides, in pertinent part, that merchandise in a warehouse may be withdrawn from the warehouse for transportation and rewarehousing at another port or elsewhere, or for transfer to another bonded warehouse at the same port. The inquirer argues that transfer to a foreign-trade zone is within the contemplation of the phrase "or for transportation and rewarehousing at another port or elsewhere." That phrase was added to section 557(a) by the Customs Administrative Act of 1938, section 22(a), 52 Stat. 1087. Senate Report 1465, 75th Cong., 10 (1938), states that the words "'or elsewhere' (added by a Senate committee amendment) will eliminate a possible objection to the withdrawal of goods from warehouse for transportation and rewarehousing in Customs bonded warehouses established elsewhere than within the limits of a port of entry." Since foreign-trade zones had been in existence for 4 years (by virtue of the Foreign-Trade Zones Act of 1934, as amended (19 U.S.C. 81a–u)), at the time of the 1938 amendment of section 557(a), it seems likely that if the Congress intended elsewhere to refer to zones, it would have said so. It is clear from the legislative history that the language was added solely to encompass warehouses outside of port limits and nothing else. Section 146.25(d), Customs Regulations (19 CFR 146.25(d)), implements the statutory language by requiring zone-restricted status for warehoused merchandise that is transferred to a zone.

A second argument is that the situation is comparable to the Customs Service position in a decision published as C.S D. 79–454. In that decision the Customs Service held that merchandise may be entered into the U.S. Customs territory under a temporary impor-

tation under bond even though there was not a specific provision for such removal in the Customs Regulations. Unlike the regulations, the Customs Service lacks authority to change a statute. Section 557(a) clearly defines the permissible withdrawals that may be made from a Customs bonded warehouse. Also C.S.D. 79–454 did not attempt to change the statutory law regarding temporary importations under bond. That is, the time requirement for entry must be met and once the article is temporarily imported, the requirement for exportation within the statutory period must be satisfied. For example, in order to return such an article to a foreign-trade zone, it would have to be admitted in zone-restricted status in order to satisfy the exportation requirement.

A third argument is that the result could be accomplished by sending the article out of the United States and immediately returning it to a foreign-trade zone. Since exportation is a severance of goods from the mass of things belonging to the United States with an intention of uniting them with the mass of things belonging to some foreign country, it is doubtful that the hypothetical procedure can be considered an exportation for the purpose of satisfying the warehouse bond. *See Swan & Finch Co.* v. *U.S.*, 37 Ct. Cl. 101 (1901), affd. 190 U.S. 143 (1903) and *U.S.* v. *National Sugar Refining Co.*, 39 C.C.P.A. 96, C.A.D. 470 (1951).

Unlike warehoused merchandise which must be withdrawn for consumption or exported within 5 years from the date of exportation, merchandise may stay in a foreign-trade zone indefinitely. To insure satisfaction of the bond requirement for exportation, warehoused merchandise may be admitted into a zone only with zone-restricted status.

Holding.—Merchandise in a Customs bonded warehouse may be withdrawn from that warehouse and admitted into a foreign-trade zone only under zone-restricted status.

(C.S.D. 81–89)

Classification: Lifeline Safety Devices Classifiable as Machines in Item 678.50, TSUS

Date: October 9, 1980
File: CLA-2:RRUCGC
064783 JCH

This decision concerns the tariff classification of lifeline safety devices.

Issue.—The ruling applicant, in effect, has asked for a reconsideration of our letter of January 27, 1975 (file No. 036846), in which we

classified the (company name) spring-loaded fall safety unit under the provision for articles of steel, not specially provided for, in former item 657.20, Tariff Schedules of the United States (TSUS). This provision has been redesignated item 657.25, and the current column 1 rate required for merchandise classifiable under it is 9 percent ad valorem. It is claimed that a similar competing product, the (company name) safety block, is receiving more favorable treatment, viz, classification under the provision for machines, not specially provided for, in item 678.50, TSUS. The current column 1 rate of duty required under this provision is 4.8 percent ad valorem.

Facts.—The safety devices somewhat resemble in shape and use blocks and tackles, except they are enclosed metal articles. The top end of either device is hooked to an overhead support such as a structural member or tripod, or it may be hooked to a horizontal line so that the device can move horizontally with the horizontal movements of the protected worker. A line from the bottom of the typical device is made of nylon or metal cable and is attached to the worker's safety belt. The devices practically instantaneously arrest an accidental fall of the protected worker bringing him to a cushioned stop.

In both the (company name) and (company name) devices, the line is kept taut by spring. When movement of the line reaches a certain acceleration due to a fall, it causes two pawls to be extended and to engage a drum which then revolves within the threaded sides of the case and moves against plates variously described as a friction clutch and brake.

There are different versions of devices which achieve the same results under different trade or model names. In some of the devices, the line is held taught by an external free-swinging weight. In others, a weight, pulley, and endless line system may be employed. Other devices may move vertically with the vertical movements of the protected worker along a track or cable. In a version encompassed by our letter of January 27, 1975, called the (trade name), a fall was arrested by friction action applied directly to the line itself.

Law and analysis.—Resolution of the tariff classification issue set forth at the outset of this decision revolves around whether the safety devices in question are to be regarded as machines. What qualifies as a machine for tariff classification purposes has been discussed by the courts many times without the emergence of a single definition or hard and fast guidelines. However, it can be stated generally that a machine for tariff classification purposes must be commonly known as a machine, or of a class or kind of merchandise commonly known generically as machines. Further, the ability of a device to apply or modify force or speed, to change the direction of or transmit motion, to convert energy from one form to another, or to perform work are

pertinent considerations. *Simon, Buhler & Baumann (Inc.)* v. *United States*, 8 CCPA 273, T.D. 37537 (1918); *United States* v. *J. E. Bernard & Co.*, 30 CCPA 213, C.A.D. 235 (1943); *United States* v. *IDL Mfg. & Sales Corp.*, 48 CCPA 17, C.A.D. 756 (1960).

At first blush, it would appear that the instant articles, or at least the more complex versions of them, easily display the characteristics of machines. In operation, the downward linear motion of the line is converted to rotary motion which is reconverted into the linear motion of the revolving drum. In this process, the force of the falling body is modified to produce the proper pressure on the friction plates. Further, the reliance on friction as a salient feature in the operation of the devices of necessity involves the conversion of kinetic energy to heat.

However, a device does not qualify as a machine merely because it contains mechanical parts, but an overall view of it must disclose that it is, in fact, a machine. *William H. Masson, Inc.* v. *United States*, 66 Cust. Ct. 55, C.D. 4167 (1971). It would appear that the overall impression of the devices in question is one of brakes rather than of machinery, and that brakes are not articles commonly thought of as machines. They are usually considered as parts of or adjuncts to machines, but not as machines in themselves. In the *William H. Masson* case, *supra*, the court recognized that there was an issue as to whether brakes were machines, but left the question open by considering brakes only hypothetically as machines, rather than making a definitive decision on the point. In *Nord Light, Inc.* v. *United States*, 49 CCPA 12, C.A.D. 786 (1961), the merchandise at issue was not brakes, but it was similar to the instant merchandise in that it suspended hanging light fixtures at adjustable heights using a mechanism employing a spring-loaded reel, pawls, and a ratchet. Its function was also similar to that of the instant merchandise in that it performed only instantaneously or occasionally without producing sustained work in the more conventional sense.

In our opinion it would be difficult to acknowledge that the merchandise which was the subject of the *Nord Light* case was properly regarded as a machine while claiming the instant merchandise was not a machine. Further, we have previously ruled that brakes by themselves, when employing certain mechanical features common to machines, are classifiable under item 678.50. This view was reflected in our letter of February 20, 1975 (file No. 031261), and in our protest review decision of November 6, 1974 (protest No. 30042001506).

Holding.—For the foregoing reasons, we now find that the (company name) safety block has been properly classified under item 678.50, and that the (company name) safety device is entitled to the same classification. Accordingly, our previous classification of Jan-

uary 27, 1975, is revoked in its entirety. We further find that the (company name) safety device, which was also the subject of that decision, should similarly be classified under item 678.50, regardless of its less complex design. This change is not applicable to the duty on any safety device where there has been a final liquidation.

(C.S.D. 81-90)

Classification: Electrical Modular or Perfusion System for Life Support Use During Coronary Surgery

Date: October 14, 1980
File: CLA-2:R:CV:MSP
054332 LLB

In your letter of March 31, 1978, on behalf of (corporate name) you requested the tariff classification of a device known as the (corporate name) Perfusion System, a product of West Germany.

Descriptive literature indicates that the perfusion system is comprised of the following:

Roller pump module—This is the key element of the (corporate name) Perfusion System. It provides rapid and repeatable occlusion while maintaining an accurate and dependable blood flow rate;

Timer module—A timing device consisting of two independent three-digit timers which display the elapsed time of individual events as well as the total elapsed time;

Temperature module—A device used to select and display the temperature sensed by any one of the six attached thermistor probes. The temperature is displayed via a light emitting diode to the nearest tenth of a degree;

Pressure/flow control module.—An apparatus used to monitor pressure in the arterial or coronary lines. It limits the maximum pressure to a predetermined positive value or maintains a constant positive or negative pressure at any point in the pump circuit. Changes in the flow resistance of the blood circuit are measured by a transducer with a digital display of the feedback;

ECG module.—A unit which provides a pulsatile flow, synchronized to the patient's ECG, during total or partial bypass;

Mobile console.—A stainless steel chassis which can hlod various combinations of components. The wheels are electrically conductive. The central power supply and current distribution are located in the console frame.

Essentially, the device is an electrical modular system designed to be used for life support in coronary surgery. It permits bypass of the heart during open heart surgery by combining a pumping system and oxygenator to furnish a constant and controlled supply of blood to the body. In addition, other monitoring components may be added to the system to monitor the condition of the patient.

You suggest that the merchandise (either in its entirety or through the use of combinations of various of its parts) may also be employed to treat a patient:

a. Suffering from acute respiratory insufficiency;

b. Suffering from liver failure;

c. Suffering from cardiopulmonary failure or failing lungs and needing long-term support; or,

d. Requiring localization of drugs which are injected for the treatment of cancer (regional chemotherapy).

You contend that the merchandise is more properly classifiable as other electromedical apparatus in item 709.17, Tariff Schedules of the United States (TSUS), dutiable at the rate of 6 percent ad valorem, rather than as electrosurgical apparatus, in item 709.15, TSUS, dutiable at the rate of 18 percent ad valorem. In support of this contention you argue that:

a. Since the perfusion system may possibly be employed to perform certain nonsurgical perfusion functions, it is more than an electrosurgical apparatus;

b. The device is analogous to an anesthetic device (which is not classifiable as an electrosurgical instrument even though it is used in surgery) because it merely assists in preparing the patient so that the surgeon can perform surgery; and,

c. While the merchandise is employed during surgery, it does not itself perform the surgical procedure and is operated not by a surgeon but by a perfusionist.

According to *Robert Bosch Corp. et al.* v. *United States*, 63 Cust. Ct. 96, 103-104, C.D. 3881 (1969), the more than doctrine provides that:

> * * * where an article is in character or function something other than as described by a specific statutory provision—either more limited or more diversified—and the difference is significant, it cannot find classification within such provision. It is said to be more than the article described in the statute. *Cragston Corporation* v. *United States*, 51 CCPA 27, C.A.D. 832 (1963); *United States* v. *The A. W. Fenton Company, Inc.*, 49 CCPA 45, C.A.D. 794 (1962); *Garrard Sales Corp.* v. *United States*, 35 CCPA 39, C.A.D. 369 (1947); and *Hirsch & Co. et al.* v. *United States*, 4 Ct. Cust. Appls. 82, T.D. 33365 (1913).

However, in a recent decision the Court of Customs and Patent Appeals noted:

> * * * there is little dispositive "doctrine" associated with the so-called "more than" doctrine. Thus, while in certain cases factors such as the "predominant function" of an article or its possession of a "second significant function," might have been important, these factors are not uniquely dispositive. To say that an article is "more than" that described by a particular tariff provision is to say little more than that, in the opinion of the court, the provision cannot be interpreted to cover it. In making this determination, however, the advice in *Green* [*Green & Son (New York), Inc.* v. *United States*, 59 CCPA 31, 450 F. 2d 1396 (1971)] is to first determine the meaning of the tariff provision involved. *The Englishtown Corporation* v. *The United States*, 64 CCPA at 87, 553 F. 2d 1258 (1977).

Item 709.15, TSUS, the provision covering electrosurgical apparatus, was derived from paragraph 359, Tariff Act of 1930. In the case of *Empire Findings Co., Inc.* v. *United States*, 44 Cust. Ct. 21, C.D. 2148 (1960), it was held that:

> The provision in paragraph 359, Tariff Act of 1930 * * * is a designation by use, which contemplates scientific instruments chiefly used by surgeons in the practice of their profession.

An earlier case, *Jensen Salsbery Lab., Inc.* v. *United States*, 66 Treas. Dec. 363, T.D. 47313 (1934) stated that "the real test is whether the instrument forms part of the necessary equipment of a surgeon to enable him efficiently to practice his profession of surgery."

From the above we surmise that the term surgical apparatus encompasses those instruments which are chiefly used by a surgeon to enable him to efficiently practice his profession.

Applying that rationale to the merchandise in question, we note that in a letter of November 11, 1977, the broker for the importer specifically stated that the unit is employed during open heart surgery. In addition, descriptive literature submitted in connection with your request for tariff classification leads us to conclude that the device is designed primarily for use in the operating room. Although additional literature was submitted to demonstrate that the merchandise may have certain nonsurgical uses, there was no information indicating that this particular system has actually performed these maneuvers or that it was intended to be chiefly used in performing such nonsurgical functions.

Furthermore, our research indicates that merchandise similar to this, which is also employed during surgery, is of little use elsewhere since other devices are more effective in performing maneuvers such as long-term support and regional chemotherapy.

In view of the above, it is our belief that the provision pertaining to electrosurgical apparatus can be interpreted to cover the perfusion system.

The fact that anesthetic devices are not classifiable as electrosurgical instruments, even though used during surgery, is not relevant to the disposition of the issue in this case. The provision covering anesthetic apparatus, item 709.06, TSUS, was specifically incorporated into the tariff schedules by section 60 of the Technical Amendments Act of 1965, 79 Stat. 933. [For a discussion of the legislative history of this provision, see *American Rusch Corp.* v. *United States*, 65 Cust. Ct. 410, C.D. 4115 (1970)]. Congress has not yet taken similar action to separately classify perfusion devices.

That the merchandise does not perform surgery itself and that it is operated by someone other than a surgeon are also immaterial. As previously noted, the test in such circumstances is whether or not the article is an instrument chiefly used by a surgeon to enable him to effectively practice his profession. (See *Empire Findings* and *Jensen* cases, supra). We have already established that the subject merchandise is employed during open heart surgery. It is an integral component in this type of procedure since the patient could not survive without its assistance. Even though the device is not operated by the surgeon himself, it is operated by a perfusionist working under his direction. There is no doubt that in this capacity, the perfusion system is used by a surgeon to enable him to effectively practice his profession.

In light of the aforementioned decisions, we cannot say that it was the intention of the court to limit the applicability of the term "surgical instruments" to only those articles which are used personally by the surgeon. Indeed, surgery today is generally performed by a group of highly trained professionals working as a team. One would be neglecting the realities of modern medical practice to state that surgical instruments are only those which are used exclusively by the surgeon during surgery.

In a meeting held in our offices subsequent to your submission of written arguments, you posited that the "Dictionary of Tariff Information" (1924), the "Summary of Tariff Information" (1929), concerning the Tariff Act of 1922, and the "Brussels Nomenclature," volume 4, served to properly define the universe of electrosurgical instruments for tariff purposes. Definitions taken from the above-referenced sources would basically limit classification of devices and electrosurgical to articles composed of either steel or soft metals, and which engage in either electrocutting of tissues or electrocoagulation of blood.

We do not believe that these provisions are dispositive of congressional intent in promulgating the tariff provisions at issue. Further, we have a long and established practice in this area which looks beyond these rather outmoded definitions and takes the current state of technological development into consideration in classifying products in this ever-changing area. Additionally, unlike the relevant Brussels Nomenclature provision, item 709.15, TSUS, incorporates diagnostic apparatus in its coverage. Certainly it must be conceded that competent medical personnel might be expected to complete a diagnostic procedure before resort to electrocutting of tissue or electrocoagulation of blood becomes necessary.

Evidence of the fact that the Brussels provisions were not carried over into the TSUS in wholesale fashion, and that the intent of the former is not reflected in the latter is found in the text of the provisions themselves. Whereas the Brussels provision gives separate breakouts for electrodiagnostic apparatus and electrosurgical apparatus, both under the broad provision for electromedical apparatus, the tariff schedule allowances for these devices are both contained in item 709.15 covering electrosurgical apparatus. The intent behind the two provisions cannot be at the same time identical and different.

Accordingly, we are of the opnion that the (trade name) Perfusion System is classifiable as an entirety under the provision for electrosurgical apparatus, in item 709.15, TSUS, dutiable at the rate of 18 percent ad valorem.

(C.S.D. 81-91)

Constructed Value: Uniform Application of Term "Assists" Throughout Section 402, Tariff Act of 1930, as Amended by Trade Agreements Act of 1979

Date: October 15, 1980
File: CLA-2:RRUCV
542139 TLL
TAA #9

This is in reply to your letter dated May 22, 1980, seeking the uniform application of the term "assists" throughout section 402, Tariff Act of 1930, as amended by the Trade Agreements Act of 1979. Specifically, you are concerned that certain assist costs which were formerly dutiable under the Tariff Act of 1930, as amended by the Customs Simplification Act of 1956, but which are not to be added to the price actually paid or payable as an assist because of the language of section 402(h)(i)(A), could be added to computed value as either cost of materials and fabrication or as a general expense under sec-

tion 402(e)(i). Your letter of April 26, 1980, states that you are concerned with the following particular costs:

> (1) Management services, accounting services, legal services, and other services related to imported merchandise rendered abroad or in the United States by persons paid by their U.S. employers; and
> (2) General purpose equipment, such as sewing machines, ovens, drill presses, etc., furnished free of charge or at reduced cost used abroad in the production of merchandise imported into the United States.

In responding to your inquiry, we would like to make reference to our recent letter to you dated September 4, 1980, in which we pointed out that those items included in paragraph 2, that is, sewing machines, ovens, drill presses, etc., were properly includable as "assists" under section 402(h)(i)(A) when furnished free of charge or at a reduced cost by the buyer for use in connection with the production of merchandise imported into the United States.

In addition, we wish to emphasize that one of the changes created by the latest amendment of section 402 is the use of generally accepted accounting principles (see sec. 402(g)(3)). Accordingly, the response to your question must take into account the generally accepted accounting principles of the country of production or exportation in the case of computed value. This of course, would require a case-by-case analysis. However, we can say that those items which were formerly treated as dutiable assists, but which are not to be treated as assists under 402(h)(i)(A), will not be added in as part of computed value, as long as such treatment is in accordance with the relevant generally accepted accounting principles.

(C.S.D. 81-92)

Value: Appraisement of Women's Wearing Apparel

Date: October 15, 1980
File: CLA-2:RRUCV
542181 RP
TAA 8

This is in response to your letter of August 5, 1980, in which you request a ruling concerning the appraisement of imported women's wearing apparel pursuant to title II of the Trade Agreements Act of 1979 (TAA).

You indicate that the importer purchases piece goods for its own account from unrelated sellers from various parts of the world. The piece goods are then supplied to the importer's related factory (which

is paid a cut, make, and trim (CMT) price only) or in other instances, to unrelated factories on the same CMT basis.

During the course of business, you state that the importer may have odd lots of remnants of fabrics on hand. The yardages of these fabrics may vary from a sufficient quantity to manufacture one or two garments to an amount which would yield approximately 200 garments. Since the importer sells under designer labels, styles and fabrics must be at the height of fashion and any out-of-season fabric becomes substantially decreased in value. Thus, the wearing apparel to be produced from these odd lot remnants is worth substantially less than current styles and sold for reduced prices in the United States. Reorders cannot be filled.

You also indicate that the commercial invoices accompanying the imported merchandise will only set forth the CMT charge. A separate statement will be submitted setting forth the depreciated value of the fabric utilized to make each garment.

As you know, under the TAA, the preferred basis of appraisement is to be transaction value. Section 402(b)(1) provides:

> (b) *Transaction Value of Imported Merchandise.*—(1) transaction value of imported merchandise is the price actually paid or payable for the merchandise when sold for exportation to the United States, plus amounts equal to—
>
> (A) the packing costs incurred by the buyer with respect to the imported merchandise;
>
> (B) any selling commission incurred by the buyer with respect to the imported merchandise;
>
> (C) the value, apportioned as appropriate, of any assist;
>
> (D) any royalty or license fee related to the imported merchandise that the buyer is required to pay, directly or indirectly, as a condition of the sale of the imported merchandise for exportation to the United States; and
>
> (E) the proceeds of any subsequent resale, disposal, or use of the imported merchandise that accrue, directly or indirectly, to the seller.

Based on the circumstances you describe, it is our opinion that the transaction value for the instant merchandise would be represented by the price actually paid or payable for the garments (i.e., the CMT charge paid to the manufacturer) plus applicable additions as specified in section 402(b)(1)(A)–(E).

Since the odd lot fabric is supplied to the manufacturer by the importer, the value of the fabric should be added to the CMT price as an assist under 402 (b)(1)(C). In determining the value of this assist, we do not agree with your assertion that the proper value of the odd lot fabric should be based on the depreciated value at which the fabric would be sold to an unrelated buyer. Rather, it is our position that

the value of the assist is represented by the importer's original cost of acquiring the fabric from the unrelated sellers throughout the world. The TAA Statement of Administrative Action, which was approved by Congress, makes clear that the value of assists such as materials, components, parts, and similar items incorporated in the imported merchandise is the cost of acquistion, where the importer acquires the assist from an unrelated seller.

You maintain that the fabric was originally purchased for specific styles and orders, and that since the leftover fabric was not incorporated into the original orders, the odd lot fabric should be considered previously used. Therefore, it is your position that the assist should be valued in accordance with the section of the Statement of Administrative Action pertaining to the determination of the value of assists such as tools, dies, molds, and similar items used in the production of imported merchandise. For assists of this nature which have been previously used by the importer, the original cost of acquisition can be adjusted to reflect its use in order to arrive at the value of the assist.

However, while the odd lot fabric used by the manufacturer in this case may result in the production of a garment which is not in vogue or is sold at a reduced price, it is our opinion that the fabric has not been previously used, and therefore, no downward adjustment in value can be made. Moreover, it is clear that the odd lot pieces of fabric are materials which are incorporated into the finished garments. Consequently we find that the importer's cost of acquisition from the unrelated sellers represents the value of the material assists provided provided to the maker of the imported merchandise.

For the purpose of this ruling we note that in those instances where the importer and maker of the garments are related parties, transaction value is assumed to be the proper basis of appraisement, provided that the related party transaction is acceptable to Customs pursuant to section 402 (b)(2)(B).

(C.S.D. 81-93)

Entry Requirements: Alcoholic Beverages: Entry Documentation in Broker's Name When BATF Permit is in Importer's Name

Date: October 17, 1980
File: ENT-1-01 RRUEE
712285 M

This ruling concerns whether Customs may accept entry documentation from the broker in his name and under his bond for the

account of the importer for alcoholic beverages imported under a BATF permit in the name of the importer.

Issues.—(1) May Customs allow alcoholic beverages to be released under an immediate delivery permit, or an entry on Customs form 3461 in the name of the broker and under his bond, when BATF regulations require a permit in the name of the importer?

(2) Does the practice of permitting the broker to obtain release of the importer's merchandise under an immediate delivery permit or entry on Customs form 3461 in the broker's name under the broker's bond, and then permitting the entry summary, Customs form 7501, to be filed in the importer's name under the importer's bond, apply to the importation of alcoholic beverages?

Facts.—Some commercial importers of wine make large but infrequent importations of wine. For this reason, they do not desire to incur the expense of maintaining a yearly term entry bond and instead utilize single entry bonds to support their entry summaries for consumption. Because of possible theft or damage due to the elements, they desire expeditious release of their shipments. This is achieved by having customhouse brokers obligate their term bonds to obtain release of the shipment under either the immediate delivery or the new entry procedure. The importer will obtain a single entry bond for the purpose of filing a timely entry summary.

The district director of Customs at Detroit, Mich., notes that under Legal Determination 3550–26, Customs provided that there was no prohibition against the practice of permitting the broker to file an immediate delivery permit to obtain the release of the merchandise under his bond, and the filing of the entry (now called entry summary) under the importer's bond, since the broker is the agent of the importer. However, the district director notes that since the import permit can be made out only in the name of the actual importer, the broker is precluded from filing the entry summary in his name and under his bond. The district director thus concludes that the broker would be precluded from obtaining the release of the merchandise in his name and under his bond, using either the immediate delivery or the current entry procedures.

Law and analysis.—27 CFR 1.20 provides, in pertinent part, that no person, except pursuant to a basic permit issued under the act, shall be engaged in the business of importing into the United States distilled spirits, wines, or malt beverages.

Legal Determination 3550–26 (file No. ENT–1–01 R:E:E 305551 M) provides that the broker may file an immediate delivery in his name and under his bond to obtain the release of the merchandise, and the importer may file the entry (now called entry summary) in the im-

porter's name under the importer's bond. This ruling was applied to the new entry procedure by T.D. 79–221, which added a new section 142.4(b)(2) to the Customs Regulations.

The Bureau of Alcohol, Tobacco and Firearms has advised us that:

> When a broker is not the importer but merely takes possession on behalf of another, the alcoholic beverages must be released under the name and bond of the person actually responsible for the importation. If that person is engaged in the business of importing alcoholic beverages into the United States, the alcoholic beverages may not be released from Customs custody unless he has a basic permit.

Holdings.—1. Customs may not accept documentation from the broker in his name and under his bond, for the account of the importer of the alcoholic beverages who has a basic permit required by BATF.

2. The practice of permitting the broker to file the releasing document under his name and bond, and the entry summary in the name of the actual importer does not apply to alcoholic beverages. Under such circumstances, 27 CFR 1.20 would preclude the release of alcoholic beverages under the name and the bond of the broker.

(C.S.D. 81–94)

Classification: Uri-Dip, Urine Testing Device

Date: October 20, 1980
File: CLA-2:RRUCGC
064257 JCH

This decision concerns the tariff classification of Uri-Dip, a product consisting of an agar-coated plastic stick attached to a plastic cap which screws into a plastic vial in which the stick can be sealed for culture purposes.

Issues.—In compliance withour classification of a previous version of the product in question on January 6, 1976 (file No. 043378) which in turn followed T.D. 70–95(13), 4 Cust. Bull. 199 (1970), it, is contended, in effect, that duty is being assesed on the current version of the merchandise by some prots at the column 1 rate of duty of 19.4 percent ad valorem for pharmaceutical, hygienic, and laboratory glassware in item 547.55, Tariff Schedules of the United States (TSUS), under the similitude provision in item 798.00, TSUS, while at other ports duty is being assessed at the column 1 rate of 4.8 percent ad valorem under the provision for nonenumerated products in item 799.00, TSUS. If these classifications are not correct, it isfurther contended that the merchandise is properly classi-

fiable underthe provision for articles of plastics, not specially provided for (n.s.p.f.) in item 774.55 (formerly item 774.60), TSUS, requiring a current column 1 rate of duty of 8.1 percent ad valorem. This last claim raises the subsidiary issue as to whether the value of the plasticvials can beincluded in order to determine whether the merchandise is in chiefvalue of plastics.

Facts.—Uri-Dip, which is primarily used for urine testing, comes with coated sticks hermetically sealed in the plastic vials. Agar and other materials are used as culture media, and both sides of the sticks are coated. The present version differs from the version previously ruled on in that the cap is screwed on rather than snapped on. This allows for a greater range of tests by providing for a more mechanically tight seal.

Under a component cost breakdown provided by the ruling applicant, the value of the culture media on the plastic sticks is greater than the value of the plastic sticks themselves. If, however, the value of the plastic vials is included, the total value of the plastic components is greater than the value of the culture media.

Law and analysis.—In T.D. 70–95(13) we held that plastic containers imported with glass slides coated with culture media were regarded as packing. Accordingly, we regarded the product as essentially laboratory glassware within the meaning of headnote 2, subpart C, part 3, schedule 5, TSUS, and held it classifiable under item 547.55.

In our letter of January 6, 1976, we held, in effect, that the analogous plastic vials to be imported with the previous version of the instant merchandise also were to be regarded as packing, and, therefore, their value could not be considered in determining whether the imported products were in chief value of plastics. Accordingly, we held that if the value of the culture media was greater than the value of the plastic stick exclusive of the value of the plastic vials, the merchandise had to be regarded as duitable by virtue of the similtuce provision in item 798.00, under the rates of duty provided for under item 547.55. This position was consistent with our classifications of similar products from other manufacturers at various times. We assume that the claimed classifications of the instant merchandise under item 799.00 has reference to our ruling dated September 18, 1975 (file No. 04145), in which we held that plastic strips to which other reagent-impregnated-plastic parts were attached for urine and other tests were classifiable under item 799.00 if in chief value of the chemicals.

While the ruiing applicant contends that the plastic vials should be regarded as entireties with the coated plastic sticks rather than as packing, general headnote 6(b)(i), TSUS, which requires that packing be dutiable at the same rate as the imported merchandise,

in effect, makes packing an entirety with its contents. However, while the dutiable status of merchandise is ordinarily determined independently of the packing, this does not represent a hard and fast rule. In certain circumstances, it is appropriate to consider packing when it is pertinent to classification or a salient feature of the imported merchandise. For example, in our ruling of February 3, 1977 (file No. 047532), we considered the value of packing in determining whether imported merchandise contained materials representing the required amounts of beneficiary-developing-country-produced materials under the Generalized System of Preferences. It is now our view that whether or not the plastic vials are considered entireties with the coated plastic sticks under general headnote 6(b)(i) or otherwise, the nature of the importation is such that the plastic in the vials should be included in determining the component material in chief value.

Since it is claimed that the articles at issue would be found to be in chief value of plastics if the value of the vials is included, it is unnecessary for us to review the correctness of the previous application of items 798.00 and 799.00 to this merchandise. We note, however, that the sticks are actually small rectangular-shaped double-sided dishes or trays containing culture media and therefore have laboratory glassware analogies in slides or culture dishes. The merchandise which was the subject of our ruling of September 18, 1975, had a different configuration.

Holding.—The value of both the plastic stick and vial components of the product at issue should be included in determining the component material in chief value. Assuming the articles will thereby be found at the time of importation to be in chief value of plastics, they will pe classifiable under the provision for articles of plastics, n.s.p.f., in item 774.55. Our previous ruling of January 6, 1976, and all other classifications of similar merchandise should be regarded as modified to the extent they may be inconsistent with this decision.

(C.S.D. 81-95)

Vessels: Transport of Passengers and Merchandise by a Noncoastwise Vessel to Points on the Outer Continental Shelf or Within U.S. Territorial Waters

Date: October 22, 1980
File: VES-3-15-RRUCDC
104880 JL

This ruling concerns the applicability of the coastwise laws to the operation of vessels between the United States and points on the Outer Continental Shelf.

Issues.—1. May a non-coastwise-qualified vessel transport passengers and/or merchandise between a point within U.S. territorial waters and a point on the Outer Continental Shelf which has been marked for mineral exploration and exploitation purposes by a buoy attached to the seabed?

2. May a non-coastwise-qualified vessel transport passengers and/or merchandise to a point on the Outer Continental Shelf where a well production casing has been imbedded into the seabed?

Facts.—It is proposed to construct vessels which will be used to transport workmen, materials, and supplies to points on the U.S. Outer Continental Shelf. These points will be either operational locations which are sites selected for drilling and marked by buoys attached to the seabed, or locations where a well has been drilled and casings and pipes are in place in the seabed awaiting the placement of a production platform or vessel for the extraction of the mineral deposit. The inquirer asks whether the activities to be engaged in by the vessels may be accomplished by non-coastwise-qualified vessels.

Law and analysis.—Title 46, United States Code, section 883 prohibits the transportation of merchandise between U.S. coastwise points by a non-coastwise-qualified vessel, that is, a foreign-flag vessel, a foreign-built vessel, or a vessel which at one time has been under foreign-flag or ownership.

Section 289 of title 46 prohibits the transportation of passengers between coastwise points by a non-coastwise-qualified vessel.

Section 1333(a)(1) of title 43, prior to its amendment by Public Law 95–372 in 1978, stated in relevant part as follows:

> The constitution and laws and civil and political jurisdiction of the United States are extended to the subsoil and seabed of the Outer Continental Shelf and to all artificial islands and fixed structures which may be erected thereon for the purpose of exploring for, developing, removing, and transporting resources therefrom, to the same extent as if the Outer Continental Shelf were an area of exclusive Federal jurisdiction located within a State.

Public Law 95–372 amended, among other things, 43 U.S.C. 1333(a)(1) by striking out "and fixed structures" and inserting in lieu thereof", and all installations and other devices permanently or temporarily attached to the seabed," and by striking out "removing, and transporting resources therefrom" and inserting in lieu thereof, "or producing resources therefrom, or any such installation or other device (other than a ship or vessel) for the purpose of transporting such resources."

T.D. 54281(1) published an abstract of a ruling letter dated December 11, 1956, which held that, among other things, the coastwise laws are extended to mobile rigs during the period when they

are secured to or submerged onto the seabed of the Outer Continental Shelf. Subsequent rulings applied the same principles to drilling platforms, artificial islands, and similar structures. However, Customs has not considered the coastwise laws to apply unless and until the structure was attached in some manner to the seabed of the shelf. The import of this distinction is that no "coastwise point" was deemed to be in existence until the structure was attached. Thus non-coastwise-qualified vessels were free to transport passengers and/or merchandise to a location where a platform or other structure was being constructed, whether an exploration structure, such as a drilling platform, or an exploitation structure, such as a production platform.

The question now presented is whether the amendment of 43 U.S.C. 1333(a)(1) by Public Law 95–372 dictates that Customs now change its position in this area.

The insertion of the words "and all installations and other devices permanently or temporarily attached to the seabed" in lieu of "and fixed structures" unmistakably evidences a broadening of the jurisdictional assertion of 43 U.S.C. 1333(a)(1) to cover such devices as are here under consideration. The placement of a buoy to mark a point for the commencement of exploratory operations on the shelf by securing it to the seabed is "for the purpose of exploring for * * * resources," within the meaning of the statute. Likewise a well casing with attendant accessory systems, when submerged into the seabed of the shelf, are "other devices" within the meaning of section 1333 (a)(1). Accordingly, Customs and navigation laws, including the coastwise laws and the laws concerning the entrance and clearance of vessels are extended to such devices during the period when they are submerged onto or attached to the seabed of the Outer Continental Shelf.

Holdings.—1. The Customs and navigation laws of the United States, including the laws regarding entrance and clearance of vessels and the coastwise laws, are extended to sites on the U.S. Outer Continental Shelf when devices and structures of all kinds are attached to or submerged onto the seabed for the purpose of exploring for, developing, producing, or transporting resources therefrom pursaunt to 43 U.S.C. 1333(a)(1), as amended by Public Law 95–372.

2. The transportation of passengers and/or merchandise from a point within U.S. territorial waters (or from a coastwise point outside territorial waters) to a buoy marker which is submerged onto or attached to the Outer Continental Shelf for the purpose of resource exploration operations is prohibited to a non-coastwise-qualified vessel pursuant to 46 U.S.C. 883 and 289.

3. The transportation of passengers and/or merchandise from a point within U.S. territorial waters (or from a coastwise point outside territorial waters) to a well which has been sunk into the seabed of the Outer Continental Shelf for the purpose of resource exploration or production is prohibited to a non-coastwise-qualified vessel pursuant to 46 U.S.C. 883 and 289.

Other documents affected: C.S.D. 79–1 expanded and T.D. 54281(1) expanded.

(C.S.D. 81–96)

Drawback: Orange Juice To Satisfy the Requirement of the Substitution Drawback Law (19 U.S.C. 1313(b))

Date: October 22, 1980
File: DRA–1–RRUCDB NK 211782

Issues.—1. Whether orange juice as extracted from fresh oranges is of the same kind and quality as concentrated orange juice to satisfy the requirement of the substitution drawback law (19 U.S.C. 1313(b)), and, if not,

2. Whether Customs approval of the protestant's drawback contract on June 27, 1978 (T.D. 78–293–A), authorized the substitution of domestic fresh orange juice for imported designated concentrated orange juice as claimed by the protestant.

Facts.—Imported concentrated orange juice of 65° Brix was designated by the protestant as the basis for drawback on the exported product. The exported product was single strength orange juice made with the use of orange juice as extracted from fresh oranges which was at no time in a concentrated condition. The protestant claims:

(1) That domestic fresh orange juice (single strength juice) used to produce a product of single strength orange juice for export is of the same kind and quality as imported designated concentrated orange juice of 65° Brix; and,

(2) That Customs approval of the protestant's drawback contract on June 27, 1978, authorized the substitution of domestic fresh orange juice for imported concentrated orange juice for use in producing a single strength orange juice product for drawback.

Law and analysis.—

Issue 1—Same Kind and Quality

Under section 1313(b), the substituted domestic merchandise and the designated imported merchandise used in production for

drawback must be of the same kind and quality. Customs consistently has used industry standards as guidelines in its administration of the substitution drawback law in determining questions of same kind and quality.

In a publication in the Federal Register, June 10, 1980 (45 F.R. 39244, T.D. 80–153), the Customs Service concluded that the standards of identities of the Food and Drug Administration (FDA) and the standards of grades of the Department of Agriculture (USDA) for orange juice products (21 CFR, part 146, and 7 CFR, part 2852) represent industry standards for these products. The Customs Service affirmed its use of these standards in determining the same kind and quality questions for orange juice products under the substitution drawback law. Since this publication contains reasoning which is also applicable in arriving at our decision in this protest, it is incorporated by reference as part of our decision.

In applying the FDA and USDA standards for orange juice products, we conclude that single strength orange juice products, frozen orange juice (21 CFR 146.137) and orange juice for manufacturing (21 CFR 146.151) are not of the same kind and quality for drawback substitution purposes as frozen concentrated orange juice (21 CFR 146.146) and concentrated orange juice for manufacturing (21 CFR 146.153).

Issue 2.—Whether Customs Authorized the Substitution of Fresh Single Strength Juice for Concentrate

Reproduced below are the parallel columns in the protestant's approved drawback contract listing the domestic merchandise in the right hand column substituted for the corresponding imported designated merchandise.

Imported merchandise or drawback products to be designated as the basis for drawback on the exported products	*Duty-paid, duty-free, or domestic merchandise of the same kind and quality as that designated which will be used in the manufacture of the exported products*
Orange juice and/or concentrated orange juice as defined in the FDA Standards of Identity for: Frozen orange juice, 21 CFR 146.137 orange juice for manufacturing, 21 CFR 146.151 Frozen concentrated orange juice, 21 CFR 146.146	Orange juice and/or concentrated orange juice as defined in the FDA Standards of Identity for: Frozen orange juice, 21 CFR 146.137 Orange Juice for manufacturing, 21 CFR 146.151

Concentrated orange juice for manufacturing, 21 CFR 146.153	Frozen concentrated orange juice, 21 CFR 146.146 Concentrated orange juice for manufacturing, 21 CFR 146.153
Additionally these products would meet the requirements of the USDA Standards for grade as grade A products. The products described above will range from 11.8° Brix to 70° Brix.	Additionally these products would meet the requirements of the USDA Standards for grade as grade A products. The products described above will range from 11.8° Brix to 70° Brix.

There are four different products listed in the parallel columns which incorporate by reference the definitions of the standards of identities of the FDA for those products. The columns show that Customs approved the substitutions as listed in the protestant's contract as follows:

1. Frozen orange juice (21 CFR 146.137) for frozen orange juice;
2. Orange juice for manufacturing (21 CFR 146.151) for orange juice for manufacturing:
3. Frozen concentrated orange juice (21 CFR 146.146) for frozen concentrated orange juice; and
4. Concentrated orange juice for manufacturing (21 CFR 146.153) for concentrated orange juice for manufacturing.

The contract does not list in the parallel columns the substitution of domestic frozen orange juice (21 CFR 146.137) for imported designated concentrated orange juice for manufacturing (21 CFR 146.153). However, based on the additional statement in the parallel columns that "the products described above will range from 11.8° Brix to 70° Brix" and the manufacturing processes described in the approved contract, the protestant claims that Customs Headquarters authorized the substitution of domestic single strength orange juice for imported designated concentrated orange juice. We do not agree.

The four products listed in the parallel columns may collectively range from 11.8° Brix to 70° Brix. However, based on the standards of identities of the FDA incorporated by reference in the protestant's contract, it is not technically possible for each individual listed product to range from 11.8° Brix to 70° Brix. The concentration of orange

juice soluble solids of concentrated orange juice for manufacturing (21 CFR 146.153 and 7 CFR 2852.2221–2231) is not less than 20° Brix. The Brix value of frozen concentrated orange juice (21 CFR 146.146 and 7 CFR 2852.1581–1592) is not less than 41.8° Brix. Single strength juice (21 CFR 146.137 and 146.151), which of course is not concentrated, is less than 20° Brix. The average Brix value of unconcentrated natural orange juice is determined in the trade and commerce of the United States as 11.8° Brix. (See Customs Regulations, 19 CFR 151.91). Frozen orange juice as defined in the standard of identity (21 CFR 146.137) and orange juice for manufacturing as defined in the standard of identity (21 CFR 146.151) cannot meet the definition of concentrated orange juice for manufacturing as defined in the standard of identity (21 CFR 146.153) and vice versa.

Further evidence that Customs headquarters did not authorize the substitution of frozen orange juice for concentrated orange juice for manufacturing is the additional paragraph inserted in the protestant's contract after the parallel columns which reads as follows:

> The imported merchandise which we will designate on our claims will be so similar in quality to the merchandise used in manufacturing the exported articles on which we claim drawback that the merchandise used would, if imported, be subject to the same rate of duty as the imported designated merchandise.

Frozen orange juice, not concentrated (21 CFR 146.137), is classifiable in item 165.30, Tariff Schedules of the United States (TSUS) under the column 1 rate of duty at 20 cents per gallon. Concentrated orange juice for manufacturing (21 CFR 146.153) is classifiable in item 165.35, TSUS, under the column 1 rate of duty at 35 cents per gallon. Accordingly, if Customs headquarters authorized the substitution of frozen orange juice for concentrated orange juice for manufacturing, such authorization would be inconsistent with the paragraph concerning rate of duty.

The substitution drawback law also requires that to be eligible for drawback, the merchandise must be used in the manufacture or production of articles for export. The caption "Processes of Manufacture or Production" in the protestant's approved contract describes three optional manufacturing processes for canned orange juice for export as follows:

> 1. Canned orange juice may be prepared from orange juice extracted from fruit meeting the maturity requirements of the Florida Citrus Code.
>
> *Comment*—This process is in conformity with the claim in the parallel columns that domestic frozen orange juice (21 CFR 146.137) would be substituted for imported designated frozen orange juice (21 CFR 146.137).

2. Canned orange juice can also be prepared from concentrated orange juice (imported and/or domestic) which has been reconstituted to a minimum of 11.8° Brix with water.

Comment—This process is in conformity with the claim in the parallel columns that domestic concentrated orange juice for manufacturing (21 CFR 146.153) would be substituted for imported designated concentrated orange juice for manufacturing (21 CFR 146.153).

3. Canned orange juice can also be produced by mixing freshly extracted juice and reconstituted concentrate to give a final product with a minimum of 11.8° Brix.

Comment—This process is in conformity with the claim in the parallel columns that domestic frozen orange juice would be substituted for imported designated frozen orange juice and that domestic concentrated orange juice for manufacturing (used to produce reconstituted juice) would be substituted for imported designated concentrated orange juice for manufacturing.

The manufacturing or production processes described above do not support the protestant's contention that Customs headquarters approved the substitution of domestic frozen orange juice for imported designated concentrated orange juice for manufacturing.

Holding.—

Issue 1—Orange juice as extracted from fresh oranges is not of the same kind and quality as concentrated orange juice for manufacturing for substitution drawback purposes.

Issue 2—Customs headquarters approval of the protestant's drawback contract on June 27, 1978, did not authorize the substitution of fresh orange juice for imported designated concentrated orange juice.

You are directed to deny the protests in full. Your file is returned herewith.

(C.S.D. 81–97)

Temporary Importation Under Bond: TIB's Canceled When Exporter Takes Possession of Merchandise Entered Under Bond

Date: October 24, 1980
File: CON–9–04–RRUCDB
211657 SMC

Issue.—When merchandise entered under a temporary importation bond (TIB) has been sold for exportation, may the bond be canceled when the exporter takes possession?

Facts.—A manufacturer imports components temporarily free of duty under bond. The components are used in the production of steel cargo containers which are sold for exportation by the importer to international leasing and shipping companies. The importer requests that the TIB's be canceled when the exporters take possession of the containers and confirm their receipt by affidavit.

Law and analysis.—Headnote 1(a), schedule 8, part 5, subpart C, Tariff Schedules of the United States, provides in part that articles described in the provisions of this subpart, when not imported for sale or sale on approval, may be admitted into the United States without the payment of duty, under bond for their *exportation* within a specified period of time. [Italic added.]

Bonds taken pursuant to this provision of law may be canceled only by the exportation or destruction under Customs supervision of the articles entered. Upon failure to so export or destroy within the bond period, liquidated damages shall be assessed in an amount equal to double the estimated duties applicable to such entry.

It is therefore necessary to address ourselves as to what is considered an exportation. Section 113.55(a), Customs Regulations, defines exportation as "a severance of goods from the mass of things belonging to this country with the intention of uniting them to the mass of things belonging to some foreign country." From this definition it is clear that an exportation has not taken place when an exporter merely takes possession of articles sold to him by an importer. A "severance of goods from the mass of things belonging to this country * * *" has not been made, therefore the bond cannot be canceled at this point. An affidavit by the exporter confirming his receipt of the articles would not alter this fact. Further, the importer's liability under the bond would not be terminated upon sale of the articles to the exporter. The obligation to export rests with the importer and cannot be transferred to the exporter.

Holding.—A TIB has not been canceled when an exporter takes possession of merchandise entered under the bond and sold to him by the importer.

(C.S.D. 81-98)

Foreign Trade Zones: Customs Regulations Relating to Domestic Merchandise Transferred From Customs Territory Into or From FTZ Into Customs Territory

Date: October 24, 1980
File: FOR-1-RRUCDB L 211834

Issue.—May the Customs Service waive the requirements of sections 146.12, 146.22, and 146.44, Customs Regulations (19 CFR

146.12, 146.22, and 146.44), as they relate to domestic merchandise transferred from the Customs territory into a foreign-trade zone (FTZ), or from a FTZ into the Customs territory?

Facts.—A domestic company imports foreign materials, parts, components, subassemblies, and assemblies to produce both internal combustion jet aircraft and marine industrial engines. All of the above foreign articles are also imported to supply a spare parts inventory, and on occasion a complete engine is imported. The inquirer wishes to transfer this merchandise into a FTZ and states it will comply completely with the requirements of sections 146.12, 146.32, and 146.45 or 146.46, Customs Regulations (19 CFR 146.12, 146.32, and 146.45 or 146.46,) insofar as foreign merchandise is concerned. It seeks relief from any and all requirements on domestic merchandise prescribed in sections 146.12, 146.22, and 146.24, Customs Regulations (19 CFR 146.12, 146.22, and 146.24), and all other applicable sections.

Law and analysis.—The sections of the Customs Regulations from which relief is requested relate to the application and permit for admission of merchandise to a FTZ (sec. 146.12), and to privileged (sec. 146.22) and nonprivileged (sec. 146.24) domestic merchandise.

Privileged domestic merchandise is defined in the regulations as (a) merchandise which is the growth, product, or manufacture of the United States on which all internal revenue taxes, if applicable, have been paid, (b) previously imported merchandise on which duty and/or tax has been paid, or (c) merchandise previously admitted free of duty. Privileged domestic status must be requested specifically on the application to transfer merchandise into the FTZ. The exception to this requirement is that domestic packing and repair materials may be transferred to a FTZ as privileged domestic merchandise without the application otherwise required provided the district director is satisfied that the revenue will be protected and the rights of the importer are not prejudiced.

Privileged domestic merchandise which has not lost its identity by being repacked, manipulated, or manufactured with merchandise having a different FTZ status, or which has not otherwise lost its identity, may be returned to Customs territory free of quota, duty, or tax.

Nonprivileged domestic merchandise is merchandise which could have obtained the status of privileged domestic merchandise had an application for such status been approved.

We understand that the greater number of articles transiting the FTZ are aircraft engine parts and that many, if not all, of the imported parts, etc., are interchangeable between aircraft, marine, and industrial engines. Imported aircraft engines and parts for civil aircraft are free of duty under Title VI, Civil Aircraft Agreement, of

the Trade Agreements Act of 1979 (Public Law 96–39). These articles, upon application, would be entitled to privileged domestic status under section 146.22(a)(3), Customs Regulations (19 CFR 146.22(a)(3)). They would also be entitled to nonprivileged domestic status under section 146.24, Customs Regulations. Marine and industrial engines and parts do not, of course, receive the duty-free treatment accorded aircraft engines and parts under the Trade Agreements Act of 1979.

We are advised that aircraft, marine, and industrial engines are assembled on the same production lines. This, it appears, would result in interchangeable parts, assemblies, etc., with different zone statuses being available for incorporation into aircraft as well as marine and industrial engines. There would be a similar situation with the spare parts inventory. Thus, if the requested relief were granted, it appears that most articles entering and leaving the FTZ would receive no Customs treatment.

If the requested relief from sections 146.12, 146.22, and 146.24, Customs Regulations, were granted, all merchandise meeting the definitions in section 146.22(a) and 146.24, Customs Regulations, also would be eligible for admission to the FTZ and unrestricted movement in the FTZ free of any form of Customs control. By reason of the Civil Aircraft Agreement, imported parts, assemblies, etc., dedicated to aircraft engines for civil aircraft and previously admitted into the Customs territory free of duty and tax, together with domestic and other qualified merchandise, could be admitted to the FTZ without documentation or Customs control. Many of the imported parts, which are free of duty when dedicated to aircraft engines, are interchangeable with parts used in marine and industrial engines which are dutiable if entered into the Customs territory. In our view, the presence in the FTZ of undocumented imported parts dedicated to aircraft engines which are interchangeable with imported parts not dedicated to aircraft engines when aircraft and other engines are manufactured on the same production lines would introduce intolerable control problems for the Customs Service and would represent a serious risk to the revenue, problems and risk which the regulations are designed to avoid.

It is the responsibility of the Customs Service, together with the Foreign-Trade Zones Board, to administer the admission of merchandise into, and the transfer of merchandise from, a FTZ. The Customs Regulations prescribe the procedures applicable to such admissions and transfers. The facts presented do not justify, in our view, a waiver of the regulations to grant the requested relief.

Holding.—Under the circumstances described, there is no basis to waive the requirements of sections 146.12, 146.22, and 146.24,

Customs Regulations (19 CFR 146.12, 146.22, and 146.24), as they relate to domestic merchandise transferred, from the customs territory into or from a FTZ into the Customs territory.

(C.S.D. 81–99)

Value: Assists—Dutiability of Engineering Drawings and Specifications

Date: October 24, 1980
File: CLA–2:RRUCV
542209 MK

To: District Director, San Francisco, Calif.

From: Director, Classification and Value Division.

Subject: Dutiable Status of Engineering Drawings and Specifications (Internal Advice Request No. 126/80)

This replies to your memorandum of July 3, 1980, with enclosures, which transmitted an importer's request for internal advice on whether engineering drawings and specifications, which the importer furnished to the manufacturer free of charge, are a dutiable assist under the provisions of section 402, Tariff Act of 1930, as amended by the Customs Simplification Act of 1956 (new law.)

The importer requested sealed bids, from qualified bidders, to construct a new vertical lift span in an existing railroad bridge. In order to give those bidders the necessary technical data on which to bid, the importer commissioned a consulting engineers' firm to draw up plans and specifications, and paid the firm $162,500. The plans were necessary for the production of the bridge.

The importer's customhouse broker cites C.S.D. 79–299 (No. 061067), and a headquarters ruling of January 18, 1977 (No. 540764), to support his contention that if drawings are provided free of charge, they are not considered as a dutiable assist.

We believe the facts in the cited cases are clearly distinguishable from the case before us. C.S.D. 79–299 concerned old drawings of transmission towers previously made up and used by several State and Federal agencies. The drawings were in the public domain and, therefore, available to anyone wishing copies. In the 1977 ruling, there was evidence that any person would be allowed to copy the drawings in question for the cost of reproduction.

In the case before us, the drawings were specifically commissioned for a particular bridge, and there is no evidence that they were available to anyone who requested them, simply for the cost of reproduction.

In fact, we understand that the bidders were only given sufficient technical data to enable them to submit their bids, and that the entire package of drawings and specifications was given only to the successful bidder.

We find no legal basis for the broker's contention that the drawings and specifications were not dutiable because they were supplied to the foreign manufacturer free of charge. In the case of *Ford Motor Company* v. *United States*, A.R.D. 9 (1952), pattern equipment, manufactured in the United States, was furnished to the manufacturer without charge, and used as a mold in producing imported iron castings. In reply to the contention that the cost of the pattern equipment should not be included in cost of production (Sec. 402(f), Tariff Act of 1930, as amended), the court said:

> Nowhere in said section do we note any requirement that the cost shall have been one incurred by the manufacturer who has produced the goods * * *. Its purpose is to derive, not the manufacturer's actual cost, but the actual cost of manufacture.

We conclude that the drawings and specifications should be treated as a dutiable assist. If the entire amount of $162,500 is attributed to drawings and specifications used in the production of the imported merchandise, then the full amount is dutiable as an assist. If any drawings dealt with such matters as terrain studies or other matters not directly related to production of the imported merchandise, they should not be included in the dutiable value.

(C.S.D. 81–100)

Foreign Trade Zones: Destruction of Zone Restricted Merchandise, 19 U.S.C. 81c

Date: October 28, 1980
File: DRA-1-RRUCDB RB
211984

Issue.—Whether the removal by a cyanide solution of precious metal overlay from rejected semiconductor devices represents part of a destruction process within the intent of C.S.D. 80–67 interpreting section 3 of the Foreign Trade Zones Act, as amended (19 U.S.C. 81c).

Facts.—A firm plans to bring into a foreign trade zone rejected semiconductor devices for destruction. The majority of devices to be destroyed are of either plastic or ceramic construction with precious metal contained only within each device. These devices will simply be crushed in a hammer mill and the valuable scrap salvaged therefrom after withdrawal from the foreign trade zone, a process already

specifically approved in C.S.D. 80–67. However, the remaining devices have an exterior overlay of precious metal which should be removed initially in order to insure the greatest ultimate recovery of gold.

Accordingly, once in the zone, these latter devices would be immersed in a cyanide solution in order to remove the precious metal overlay therefrom. After the precious metal is chemically removed and in solution, the devices would then be crushed in a hammer mill. There would be no recovery of the valuable metal scrap by removing it from the cyanide solution until after the solution is withdrawn from the foreign trade zone.

Law and analysis.—According to section 3 of the Foreign Trade Zones Act, as amended (19 U.S.C. 81c):

> * * * under the rules and regulations of the controlling Federal agencies, articles which have been taken into a zone from customs territory for the sole purpose of exportation, destruction (except destruction of distilled spirits, wines and fermented malt liquors), or storage shall be considered to be exported for the purpose of—(a) the drawback, warehousing, and bonding, or any other provisions of the Tariff Act of 1930, as amended, and the regulations thereunder.

In C.S.D. 80–67 it was ruled that the crushing of semiconductors in a foreign trade zone satisfies the requirement for destruction under 19 U.S.C. 81c. The only question here is whether putting the semiconductors in a cyanide solution prior to crushing would alter the ruling in C.S.D. 80–67.

The removal of the precious metal by putting the semiconductors in a cyanide solution and the subsequent crushing of the semiconductors constitute steps in the destruction of the semiconductors. There is no requirement in the Foreign Trade Zones Act that articles may not be destroyed by the process which results in scrap of the highest value. The important point is that if the destruction consists of multiple steps, each step should carry forward the destruction of the articles, as is true of the case under consideration.

Holding.—The ruling contained in C.S.D. 80–67 is applicable to the destruction of the devices wherein the destruction process initially involves the removal of precious metal overlay in a cyanide solution and then through the physical crushing of the devices. Hence, the requirement of destruction of zone restricted merchandise under section 3 of the Foreign Trade Zones Act, as amended (19 U.S.C. 81c), is satisfied.

U.S. Customs Service

General Notice

(19 CFR Part 4)

VESSELS IN FOREIGN AND DOMESTIC TRADES

Proposed Customs Regulations Amendments Concerning the Illegal Discharge of Oil and the Pollution of Coastal and Navigable Waters

AGENCY: U.S. Customs Service, Department of the Treasury.

ACTION: Proposed rule.

SUMMARY: This notice proposes to amend the Customs Regulations relating to the illegal discharge of oil and the pollution of coastal and navigable waters by the deposit of refuse matter or hazardous substances. The amendments are being proposed to conform the Customs Regulations with changes made by the Federal Water Pollution Control Act Amendments of 1972 (Public Law 92–500), which were enacted to restore and maintain the chemical, physical, and biological integrity of the Nation's waters.

DATES: Comments must be received on or before 60 days from the date of publication in the Federal Register.

ADDRESS: Comments (preferably in triplicate) may be addressed to the Commissioner of Customs, Attention: Regulations and Information Division, U.S. Customs Service, 1301 Constitution Avenue NW., Room 2426, Washington, D.C. 20229.

FOR FURTHER INFORMATION CONTACT: Paul Hegland, Carriers, Drawback and Bonds Division, U.S. Customs Service, 1301 Constitution Avenue NW., Washington, D.C. 20229; 202–566–5706.

SUPPLEMENTARY INFORMATION:

BACKGROUND

Pursuant to section 91, title 46, United States Code (46 U.S.C. 91), before any vessel may depart the United States for a foreign port, clearance must be obtained from Customs at the port of departure.

To assist in the enforcement of the Federal Water Pollution Control Act, as amended, the Water Quality Improvement Act of 1970 (33 U.S.C. 1161, 1162), provides that the Secretary of the Treasury, at the request of the Secretary of the Department in which the Coast Guard is operating, shall withhold clearance of any vessel the owner or operator of which is subject to a penalty for violation of the act.

Section 4.66a, Customs Regulations (19 CFR 4.66a), provides that if a district director of Customs receives a request from an officer of the Coast Guard to withhold clearance of a vessel whose owner or operator is subject to a civil penalty for knowingly discharging oil in violation of the Water Quality Improvement Act of 1970, clearance shall not be granted until the request is withdrawn or a bond or other surety satisfactory to the Coast Guard has been filed.

Section 4.66b, Customs Regulations (19 CFR 4.66b), provides procedures for Customs officers to follow in reporting to the Coast Guard discharges of refuse matter, hazardous substances, or oil in U.S. waters in violation of section 13 of the act of March 3, 1899 (30 Stat. 1152; 33 U.S.C. 407), and the Water Quality Improvement Act of 1970 (33 U.S.C. 1161, 1162).

The Federal Water Pollution Control Act Amendments of 1972 (33 U.S.C. 1321 (1976)), extended the provision for withholding clearance to include discharges of hazardous substances as well as oil, whether discharged knowingly or not, and deleted the provision for granting clearance upon withdrawal of the Coast Guard's request to withhold clearance. In addition, the authority cited for sections 4.66a and 4.66b was changed to section 2, 86 Stat. 862, 864, 865, as amended; 33 U.S.C. 1321. Therefore, Customs proposes to amend sections 4.66a and 4.66b, Customs Regulations, to conform with the amended law.

PROPOSED AMENDMENTS

It is proposed to amend part 4, Customs Regulations (19 CFR part 4), in the following manner:

Section 4.66a would be amended to read as follows:

4.66a Illegal discharge of oil and hazardous substances.

If a district director receives a request from an officer of the U.S. Coast Guard to withhold clearance of a vessel whose owner or operator is subject to a civil penalty for discharging oil or a hazardous substance into or upon the navigable waters of the United States, adjoining shorelines, or into or upon the waters of the contiguous zone in quantities determined to be harmful by appropriate authorities, such clearance shall not be granted until the district director is informed that a bond or other surety satisfactory to the Coast Guard has been filed.

(Sec. 2, 86 Stat. 862, et seq., as amended; R.S. 4197, as amended; 33 U.S.C. 1321, 46 U.S.C. 91.)

Section 4.66b(a) would be amended to read as follows:

4.66b Pollution of coastal and navigable waters.

(a) If any Customs officer has reason to believe that any refuse matter is being or has been deposited in navigable waters or any tributary of any navigable waters in violation of section 13 of the act of March 3, 1899 (30 Stat. 1152; 33 U.S.C. 407), or oil or a hazardous substance is being or has been discharged into or upon the navigable waters of the United States, adjoining shorelines, or into or upon the waters of the contiguous zone in violation of the Federal Water Pollution Control Act, as amended (33 U.S.C. 1251, 1321), he shall promptly furnish to the district director a full report of the incident, together with the names of witnesses and, when practicable, a sample of the material discharged from the vessel in question.

* * * * * * *

(30 Stat. 1152; sec. 2, 86 Stat. 862, et seq., as amended; 33 U.S.C. 407, 1321.)

COMMENTS

Before adopting this proposal, consideration will be given to any written comments timely submitted to the Commissioner of Customs. Comments submitted will be available for public inspection in accordance with section 103.8(b), Customs Regulations (19 CFR 103.8(b)), on normal business days during the hours of 9 a.m. to 4:30 p.m., at the Regulations and Information Division, Room 2426, Headquarters, U.S. Customs Service, 1301 Constitution Avenue NW., Washington, D.C. 20229.

AUTHORITY

These changes are proposed under the authority of R.S. 251, as amended; R.S. 4197, as amended; 30 Stat. 1152; section 624, 46 Stat. 759; section 2, 86 Stat. 862, et seq., as amended (19 U.S.C. 66, 1624; 33 U.S.C. 407, 1321; 46 U.S.C. 91).

INAPPLICABILITY OF REGULATORY FLEXIBILITY ACT

Because the contemplated effects of the Federal Water Pollution Control Act Amendments of 1972 are presumed to have been considered by the Congress, and are considered to flow from that legal authority, not from the regulation, the regulation is not expected to: have significant secondary or incidential effects on a substantial number of small entities; impose, or otherwise cause, a significant increase in the reporting, recordkeeping, or other compliance burdens on a substantial number of small entities; or generate significant interest or attention from small entities through comments, either formal or informal.

Accordingly, the proposed amendments do not require a regulatory flexibility analysis under the provisions of Public Law 96-354, the Regulatory Flexibility Act (5 U.S.C. 601, et seq.).

DRAFTING INFORMATION

The principal author of this document was Lawrence P. Dunham, Regulations and Information Division, Office of Regulations and Rulings, U.S. Customs Service. However, personnel from other Customs offices participated in its development.

WILLIAM T. ARCHEY,
Acting Commissioner of Customs.

Approved: April 22, 1981.

JOHN P. SIMPSON,
Acting Assistant Secretary of the Treasury.

United States Court of International Trade

One Federal Plaza
New York, N.Y. 10007

Chief Judge

Edward D. Re

Judges

Paul P. Rao
Morgan Ford
Scovel Richardson
Frederick Landis
James L. Watson
Herbert N. Maletz
Bernard Newman
Nils A. Boe

Senior Judge

Samuel M. Rosenstein

Clerk

Joseph E. Lombardi

Decisions of the United States Court of International Trade

(Slip Op. 81-31)

TEXAS INSTRUMENTS INCORPORATED, PLAINTIFF *v.* THE UNITED STATES, DEFENDANT

Court No. 80-10-01666

Before BOE, Judge.

SOLID STATE ELECTRONIC WATCH MODULES AND SOLID STATE ELECTRONIC WATCHES

I. A solid state electronic watch module does not contain a mechanism incorporating moving parts to which or from which

motion is transferred and, accordingly, is not a "watch movement" within the intendment of the Tariff Schedules of the United States.

II. A solid state electronic watch consisting of a solid state electronic module fitted in a plastic case cannot be classified as a watch under item 715.05, nor as "jewelry and other objects of personal adornment" under item 740.38, TSUS, but is properly classified under item 688.45 as "electrical articles and electrical parts of articles, not specially provided for, other."

[Judgment for plaintiff.]

(Decided April 17, 1981)

Frederick L. Ikenson on the brief and at the oral argument for the plaintiff.

Thomas S. Martin, Acting Assistant Attorney General; *Joseph I. Liebman*, Attorney in Charge, International Trade Field Office, Commercial Litigation Branch (*Jerry P. Wiskin* on the brief and at the oral argument), for the defendant.

BOE, Judge: The merchandise which is the subject of the above-entitled cause of action consists of solid state electronic watch modules and solid state electronic watches entered at Lubbock, Tex., in June 1980. Upon liquidation the Director of Customs at Dallas-Fort Worth, Tex., classified the solid state electronic watch modules under item 716.18, TSUS (1980), providing:

Schedule 7, part 2, subpart E		
	Watch movements, assembled, without dials or hands, or with dials or hands whether or not assembled thereon:	
* * * * * * *		
	Having no jewels or not over 17 jewels:	
	Not adjusted, not self-winding (or if a self-winding device cannot be incorporated therein), and not constructed or designed to operate for a period in excess of 47 hours without rewinding:	
	Having no jewels or only 1 jewel:	
* * * * * * *		
716.18	Over 0.6 but not over 1.77 inches in width-------	67¢ each

The solid state electronic watches were classified under item 715.05, TSUS, providing:

715.05	Watches	The column 1 rates applicable to the cases, plus the column 1 rates applicable to the movements, if such cases and movements were were imported separately.

The plaintiff, protesting liquidated classifications, claims the imported merchandise, the solid state modules as well as the solid state watches, are properly classifiable under item 688.45, TSUS (1980) (2d supp. Mar. 28, 1980), providing:

	Schedule 6, part 5 Electrical articles and electrical parts of articles, not specially provided for: Electrical articles using preprogrammed digital integrated circuits to produce sound:	
688.45	Other	5.3% ad val.

The solid state modules which are a part of the imported entries consist of a substrate on which are affixed an integrated circuit chip, a capacitor, a quartz crystal and a digital display, more specifically referred to as a liquid crystal display (LCD). Included as a part of the module are certain additional stationary parts such as a clip to contain batteries and electrical connections between the substrate and the digital display.

The solid state electronic watches, comprising the remaining balance of the imported entries, consist of plastic cases into which the solid state electronic modules, aforedescribed, are fitted and retained.

The plaintiff in seeking a determination herein by its motion for summary judgment relies principally upon the prior decisions of this court and the affirming decisions of our appellate court in the cases of *United States* v. *Texas Instruments, Inc.*, 67 CCPA ——, C.A.D. 1244, 620 F. 2d 269 (1980), *aff'g* 82 Cust. Ct. 272, 475 F. Supp. 1183 (1979) and *United States* v. *Texas Instruments, Inc.*, 67 CCPA ——, C.A.D. 1243, 620 F. 2d 272 (1980), *aff'g* 82 Cust. Ct. 287, 475 F. Supp. 1193 (1979).

The defendant in its opposition to plaintiff's motion for summary judgment contends that the foregoing decisions are not controlling in the instant action and that genuine triable issues of fact exist herein, thereby precluding the entry of summary judgment.

It is undisputed that the imported merchandise in the instant action is not the same as the imported merchandise which was the subject matter in the prior *Texas Instruments* decisions, aforecited. In the first *Texas Instruments* case cited *supra*, the imported merchandise consisted of an encapsulated integrated circuit without a digital display affixed thereto and without a capacitor or a quartz crystal affixed to the module in the space which had been provided therefor. Notwithstanding the difference with respect to the specific identity of the merchandise in issue existing in the instant case and the prior *Texas Instruments* decisions, the court is of the opinion that the inclusion of the components (capacitor, quartz crystal, and digital display) as a part of the imported solid state electronic module in no manner serves to remove the same from the rationale of the prior determinations of this court and our appellate court.

In the prior *Texas Instruments* decision C.A.D. 1244, *supra*, affirming the decision of the trial court our appellate court determined that an integrated circuit, a component of a solid state electronic module, was not classifiable under item 720.75, TSUS (1976), as "other assemblies and subassemblies" for "watch movements." The appellate court found that in accordance with the common and commercial meaning of the term "movement" at the time the Tariff Schedules of the United States were adopted, a "watch movement" as used in the Tariff Schedules of the United States requires a mechanism possessing moving parts to which or from which motion is transferred. The court further found that neither the Tariff Classification Study nor the Congressional Record indicates that solid state electronic modules, having no moving parts, were intended by the Congress to be included within the tariff schedule provisions for "watch movements." The lexicographic and dictionary definitions as well as the testimony adduced, all with respect to the common and commercial meaning of the term "movement" at the time of the enactment of the Tariff Schedules of the United States, satisfied both the trial court as well as the appellate court that "mechanism," "works" or "body of parts" to which or from which motion is transferred is a requisite identifying characteristic of a "watch movement."

The government in an effort to bring itself within the foregoing definition of a "watch movement" again urges that an acknowledged vibration existing within the quartz crystal, a component of the solid state module, constitutes a motion sufficient to satisfy the

intended requirement. The trial court as well as the appellate court, without reservation, rejected this contention by the government when urged in the prior *Texas Instruments* cases, *supra*. In referring to the quantum or magnitude of the alleged motion within the quartz crystal as roughly one angstrom or one ten-billionth of a meter, our appellate court formerly characterized such motion as "essentially molecular vibration" neither transmitting nor transferring mechanical energy or motion to or from any other part.

Suffice it to say, this court is satisfied that the solid state electronic module, as imported, does not bear an essential resemblance to a "watch movement" as contemplated by the Tariff Schedules of the United States. *Davies Turner & Co.* v. *United States*, 45 CCPA 39, C.A.D. 669 (1957).

As our appellate court has stated in *United States* v. *Texas Instruments, Inc.*, C.A.D. 1244, *supra:*

> The criteria established by the TSUS for classification as a watch movement are: (1) A timepiece movement, (2) less than 1.77 inches wide and 0.5 inch thick. Though the dimensional requirements are met by the imported article, it does not bear an essential resemblance to a timepiece movement because the imported article is not and does not contain a movement.

67 CCPA ——, 620 F. 2d at 271.

The remaining balance of the imported merchandise consists of solid state electronic watches in which the solid state electronic modules, as hereinbefore described, are fitted and encased. In contending that these watches are properly classified under item 715.05, TSUS (1980), the government fails to recognize the underlying criteria requisite to the classification of an imported article as a watch under subpart E, part 2 of schedule 7. Headnotes to subpart E provide in part:

> *Subpart E headnotes*:
>
> 1. This subpart covers watches and clocks, time switches and other timing apparatus with clock or watch movements, and parts of these articles.* * *.
>
> 2. For the purposes of this subpart—
>
> (a) the term "*watches*" embraces timepieces (including timepieces having special features, such as chronographs, calendar watches, stopwatches, and watches designed for use in skindiving) suitable for wearing or carrying on or about the person, whether or not the movement therein is within the definition of "watch movement" in headnote 2(b), below;
>
> (b) the term "*watch movement*" means a timepiece movement measuring less than 1.77 inches in width and less than 0.50 inch in thickness; * * *.
>
> 3. (a) The complete citation for watches covered by item 715.05 and clocks covered by items 715.15 and 715.16 shall be each of such item numbers, *followed by the appropriate item*

numbers for the respective movements and cases comprising such watches or clocks. [Italic supplied.]

From the foregoing it appears implicit that subpart E, in which item 715.05 is included, embraces only watches possessing "watch movements." From the aforequoted headnote 2(a) the term "watches" embraces timepieces—whether the *movements* therein may or may not fall within the dimensional requirements provided for in the subsequent headnote 2(b). Thus, pursuant to headnote 3(a) the classification of a watch under item 715.05 includes the tariff rate applicable to the *case* of the watch plus the rate applicable to the *movement* contained therein in the same manner as if the case and the movement contained therein were imported separately. Inasmuch as no enlightenment is provided by the tariff schedules as to what constitutes a movement, except as to its size and association with a "timepiece," it has been necessary for the courts to determine the common meaning and understanding of that term in the horological industry. As this court has previously indicated herein, the solid state electronic module, having no mechanism possessing moving parts from which or to which motion is transferred, was not within the common meaning and understanding of the term "watch movements" at the time of the enactment of the Tariff Schedules of the United States. Accordingly, if the basic elements of logic are to remain inviolate, it can only follow that imported solid state electronic watches, in which the solid state electronic modules are encased and are parts thereof, likewise cannot be classified under subpart E, part 2 of schedule 7, TSUS, and specifically item 715.05 thereof.

Accompanying its response in opposition to plaintiff's motion for summary judgment, the defendant has filed a cross-motion for leave to amend its answer asserting as an alternative claim that the merchandise in question be classified under item 740.38. This alleged alternative classification is fully set forth in defendant's cross-motion and an argument in support thereof is contained as a part of defendant's memorandum in opposition to plaintiff's motion for summary judgment. Although plaintiff in its reply memorandum objects to the granting of defendant's cross-motion, full consideration thereof and an argument with respect thereto is contained at length in plaintiff's reply memorandum. It appears clear, therefore, that the plaintiff has been fully apprised with respect to the alternative claim concerning which the defendant seeks further adjudication. The very purpose of an amended answer has thus been satisfied.

Rule 15(b) of this court provides:

> (b) Amendments To Conform to the Eivdence.
>
> When issues not raised by the pleadings are tried by express or implied consent of the parties, they shall be treated in all respects as if they had been raised in the pleadings.

Accordingly, in the interest of securing an immediate adjudication of all claimed classifications herein without incurring unnecessary procedural time-consuming delays, thereby obviating renewed and repeated litigation, this court accepts defendant's cross-motion as an amended answer for the purpose of considering its alternative classification.[1]

Item 740.38 upon which defendant thus predicates its alternative claim provides:

Schedule 7, part 6		
	Subpart A.—Jewelry and Related Articles	
	Jewelry and other objects of personal adornment not provided for in the foregoing provisions of this part (except articles excluded by headnote 3 of this part), and parts thereof:	
* * * * * * *		
	Valued over 20 cents per dozen pieces or parts:	
	Watch bracelets:	
* * * * * * *		
740.38	Other	25.4% ad val.

The defendant contends that inasmuch as headnote 1 (ii) to subpart A, part 6, schedule 7, TSUS, excludes from classification thereunder watches classified under subpart E, part 2, schedule 7, the nonapplicability of the foregoing exclusionary headnote would result in the classification of watches as "jewelry and other objects of personal adornment." In support of its contention the defendant relies on headnote 2 to subpart A, part 6, schedule 7, TSUS, providing in part:

> 2. For the purposes of this subpart—
>
> (a) the term *"jewelry and other objects of personal adornment"* (items 740.05 through 740.38), includes rings, earrings and clips, bracelets (including watch bracelets and identification bracelets), necklaces, neck chains, watch chains, key chains, brooches, tiepins and clips, collar pins and clips, cuff links, dress-studs, buttons, buckles and slides, medals, military, fraternal and similar emblems, and insignia (including those prescribed for military, police, or other uniforms), fobs, pendants, hair ornaments (including barrettes, hairslides, tiaras, and dress combs), and similar objects of personal adornment, * * *.

This court is unable to share in defendant's reasoning and in particular its questionable conclusion, presumably derived from the aforequoted headnote 2. An examination of the articles specified in head-

[1] Plaintiff acknowledged at the oral argument he would not be prejudiced by the granting of defendant's cross-motion.

note 2 to be included as "jewelry and other objects of personal adornment" fails to indicate to this court that the imported merchandise can be said to be "within the named exemplars" as urged by the defendant. "Watch bracelets" and "watch chains" are neither "watches" nor "movements" as defined by the tariff schedules. The classification of a "watch bracelet" or a "watch chain" as an object of adornment under headnote 2, indeed, cannot be deemed to include the watch or the movement thereof in such a classification to any greater extent than it can be said that a "key chain" specified as an "exemplar" under headnote 2, can serve to cause the key, to which the chain may be attached, to be likewise classified thereunder.

Although "watch bracelets" have been specifically designated as "exemplars" of the term "jewelry and other objects of personal adornment" under headnote 2 aforequoted, it is of interest to note that, as evidenced by official entry papers, the watch bands attached to the imported solid state watches in issue have not been considered "jewelry or other objects of personal adornment" but have been classified and liquidated by the Customs Service under item 774.55, TSUS, as "articles not specially provided for, of rubber or plastics: * * * Other." Absent the classification of the black plastic bracelet as "jewelry" or an "object of personal adornment" it, indeed, would be a distortion of reasoning and difficult to justify the classification of the black plastic solid state watches, to which the plastic bracelet is attached, as an "object of adornment." From an examination of representative samples of the merchandise in question (exhibit 6, attachment A), the court can only conclude that the imported solid state watches are functional and serve a utilitarian purpose when worn on the person and cannot be classified, as urged by the defendant, as "jewelry and other objects of personal adornment." The exhibit itself may be said to be a most potent witness.[2] *Marshall Field & Co. v. United States*, 45 CCPA 72, C.A.D. 676 (1958).

In view of the assertions of the defendant that genuine issues of material fact exist and that a trial determining such issues is accordingly required, the remaining question to be determined herein is whether from the record submitted summary judgment may be granted. Were the classification of the merchandise in issue to be predicated upon the common understanding and meaning of the term "watch movement" as the term may have been used since the introduction of the solid state modules and watches commercially in the United States subsequent to 1972, it might be argued that the affidavits submitted by the defendants substantiate defendant's con-

[2] The burden of proof rests upon the defendant to establish the classification urged in its alternative claim. The defendant has not met this burden. See *United States v. R. J. Saunders & Co.*, 42 CCPA 128, C.A.D. 584 (1955).

tention. However, the defendant fails to recognize that it is the common as well as the commerical understanding of the meaning of the term "watch movements" at the time that the Tariff Schedules of the United States were enacted which evidences the congressional intent as to the meaning of that term in the tariff schedules. No showing has been made nor attempted to be made by the defendant that this court or our appellate court have erred in the construction of the meaning of the term "watch movement," as hereinbefore defined, and more particularly enunciated in the prior decisions of these courts in the cases of *United States* v. *Texas Instruments, Inc., supra.*

As this court has stated in previous decisions, to attempt to distort the tariff schedules in order to provide a "resting place" for articles which by tariff definition as well as by the determined congressional intent cannot be properly so accommodated will only serve to wreak untold confusion on the application of these schedules upon which the integrity of our foreign commerce depends. The courts cannot be asked to restructure the tariff schedules by judicial fiat in order to accommodate scientific and engineering innovations which far transcend the vision and intent of the Congress at the time of the enactment of the tariff schedules. It is true, as defendant urges, that it is an established principle of Customs law that tariff schedules, are written for the future as well as for present application and may embrace merchandise unknown at the time of their enactment. It must be borne in mind, however, that as a corollary thereto it is likewise well established that in applying a tariff provision to an article, unknown at the time of the enactment thereof, such an article must possess an essential resemblance to the characteristics so described by the applicable tariff provision. As our appellate court has clearly stated in the case of *Smillie & Co.* v. *United States*, 12 Cust. Ct. Appls. 365, 367, T.D. 40520 (1924):

> As to all such articles the statute will be held to apply if the articles possess an essential resemblance to the ones named in the statute *in those particulars which the statute established as the criteria of the classification.* [Italic supplied.]

In the opinion of this court the merchandise in question does not bear a resemblance to a "watch movement" as provided by item 716.18 [8] nor to a "watch" as provided by item 715.05, and accordingly, is not properly classifiable thereunder. It is the further opinion of the court that the merchandise in question is more specifically described

[8] The court notes with interest the classification under which the subject solid state module has been liquidated. Indeed, the solid state module cannot be said to be included within the descriptive heading requiring the article to be "not constructed or designed to operate for a period in excess of 47 hours without rewinding." See Descriptive heading to items 716.10 through 716.44, inclusive.

under item 688.45, TSUS, as electrical articles and electrical parts of articles, not specially provided for, other.

In the tariff schedules of 1978 and 1980 there is evidenced an increased recognition of electrical articles based on integrated circuits and their capabilities to perform various functions previously performed only by mechanical processes. Thus, in these recent schedules specific and expanded reference is made to a variety of integrated circuits, signifying an awareness of the diverse uses to which these articles are rapidly being adapted. In the same manner as the preceding item, 688.44, specifically relates to electrical articles using digital integrated circuits to produce sound, so under the claimed classification, item 688.45. "electrical articles * * *, other," the merchandise in question consists of articles using digital integrated circuits to produce time.

It appearing, therefore, that no genuine issue of material fact exists herein and that the merchandise in issue consisting of solid state electronic modules and solid state electronic watches cannot be properly classified as "watch movements" and "watches" respectively, as liquidated, nor under the claimed alternative classification urged by the defendant and it further appearing that the merchandise in question properly should be classified under item 688.45, TSUS, as claimed by the plaintiff, the motion of the plaintiff for summary judgment is, accordingly, granted.

Let judgment be entered accordingly.

Judgment of the United States Court of International Trade in Appealed Case

April 16, 1981

APPEAL 80-5.—Pasco Terminals, Inc. *v.* United States.—CRUDE OR ELEMENTAL SULPHUR—DUMPING DUTIES—AFFIRMATIVE INJURY DETERMINATION—ANTIDUMPING ACT OF 1921—SUMMARY JUDGMENT.—C.D. 4823 affirmed December 11, 1980 (C.A.D. 1256).

International Trade Commission Notices

Investigations by the U.S. International Trade Commission

DEPARTMENT OF THE TREASURY, *April 30, 1980.*

The appended notices relating to investigations by the U.S. International Trade Commission are published for the information of Customs Officers and others concerned.

R. E. CHASEN,
Commissioner of Customs.

Investigation No. 22–43

CERTAIN TOBACCO

AGENCY: U.S. International Trade Commission.

ACTION: Change of date of public hearing in investigation No. 22–43 to June 24, 1981.

EFFECTIVE DATE: April 21, 1981.

FOR FURTHER INFORMATION CONTACT: Mr. William Lipovsky, 202–724–0097.

SUPPLEMENTARY INFORMATION: The hearing in this investigation will be held beginning at 10 a.m., e.d.t., Wednesday, June 24, 1981, in the Commission's Hearing Room, U.S. International Trade Commission Building, 701 E Street NW., Washington, D.C. 20436. A hearing date of May 11, 1981, had previously been announced in the Commission's notice of institution of the investigation as published in the Federal Register of March 11, 1981 (46 F.R. 16162). The Commission's hearing has been rescheduled as a result of a request for a postponement by the U.S. Department of Agriculture in order to prepare its testimony on the issues involved in this investigation.

Persons wishing to appear at the hearing should follow the prehearing procedures outlined in the notice of March 11, 1981. Requests

to appear at the Commission's hearing should be filed in writing with the Secretary to the Commission not later than the close of business (5:15 p.m., e.d.t.), May 27, 1981. The prehearing conference will be held on Friday, May 29, 1981, at 10 a.m. e.d.t., in room 117 of the U.S. International Trade Commission Building. Nineteen copies of the prehearing briefs should be submitted to the Secretary to the Commission not later than the close of business on June 18, 1981. Written statements submitted by interested persons in lieu of an appearance at the hearing must be received not later than July 1, 1981.

By order of the Commission.

Issued: April 21, 1981.

KENNETH R. MASON,
Secretary.

In the Matter of
CERTAIN SHELL BRIM HATS } Investigation No. 337–TA–86

Notice of Termination

AGENCY: U.S. International Trade Commission.

ACTION: Termination of investigation and issuance of consent order.

SUMMARY: Notice is hereby given that the U.S. International Trade Commission has approved and issued a consent order in the above-captioned investigation, thereby terminating the investigation.

SUPPLEMENTARY INFORMATION: In connection with a complaint filed on May 4, 1980, under section 337 of the Tariff Act of 1930 (19 U.S.C. 1337) alleging unfair acts and methods of competition in the importation into and sale in the United States of certain shell brim hats, complainant, the Commission investigative attorney, and the respondents entered into a consent order agreement. Complainant is Zwicker Knitting Mills and respondents are Aris Isotoner Gloves Inc., and Aris (Philippines) Inc. In a notice of investigation published in the Federal Register on June 25, 1980 (45 F.R. 42894), the Commission stated that the investigation was being undertaken to determine whether section 337 is being violated by reason of infringement of U.S. Letters Patent 3,898,699 by respondents' shell brim hats.

Copies of the Commission's action and order, the consent order, and all other nonconfidential documents in the record of this investigation are available for inspection during official business hours (8:45 a.m. to 5:15 p.m.) in the Office of the Secretary, U.S. Inter-

national Trade Commission, 701 E Street NW., Washington, D.C. 20436, telephone 202–523–0161.

FOR FURTHER INFORMATION CONTACT: Jeffrey S. Neeley, Esq., Office of the General Counsel, U.S. International Trade Commission, telephone 202–523–0359.

By order of the Commission.

Issued: April 22, 1981.

KENNETH R. MASON,
Secretary.

In the Matter of
CERTAIN MOLDED-IN SANDWICH PANEL INSERTS AND METHODS FOR THEIR INSTALLATION

Investigation No. 337–TA–99

Notice of Investigation

AGENCY: U.S. International Trade Commission.

ACTION: Institution of investigation pursuant to 19 U.S.C. 1337.

SUMMARY: Notice is hereby given that a complaint was filed with the U.S. International Trade Commission on March 27, 1981, under section 337 of the Tariff Act of 1930 (19 U.S.C. 1337), on behalf of Shur-Lok Corp., 2451 White Road, Irvine, Calif. 92713. The complaint alleges unfair methods of competition and unfair acts in the importation of certain molded-in sandwich panel inserts into the United States, or in their sale, by reason of (1) the alleged infringement by said molded-in sandwich panel inserts of the sole claim of U.S. Letters Patent 3,182,015, (2) the alleged infringement of claims 1–4 of U.S. Letters Patent 3,271,498 and all four claims of U.S. Letters Patent 3,392,225 and the inducement of and/or contribution to said infringement, and (3) the alleged misappropriation of complainant's trade secrets. The complaint further alleges that the effect or tendency of the unfair methods of competition and unfair acts is to destroy or substantially injure an industry, efficiently and economically operated, in the United States.

The complainant requests that, after a full investigation, the Commission issue a permanent exclusion order and a cease and desist order.

AUTHORITY: The authority for institution of this investigation is contained in section 337 of the Tariff Act of 1930 and in section 210.12 of the Commission's Rules of Practice and Procedure.

SCOPE OF THE INVESTIGATION: Having considered the complaint, the U.S. International Trade Commission, on April 21, 1981, ordered that—

(1) Pursuant to subsection (b) of section 337 of the Tariff Act of 1930, an investigation be instituted to determine whether there is a violation of subsection (a) of section 337 in the unlawful importation of certain molded-in sandwich panel inserts into the United States, or in their sale, by reason of (1) the alleged infringement by said molded-in sandwich panel inserts of the sole claim of U.S. Letters Patent 3,182,015, (2) the alleged infringement of claims 1–4 of U.S. Letters Patent 3,271,498 and all four claims of U.S. Letters Patent 3,392,225 and the inducement of and/or contribution to said infringement, and (3) the alleged misappropriation of complainant's trade secrets, the effect or tendency of which is to destroy or substantially injure an industry, efficiently and economically operated, in the United States;

(2) For the purpose of this investigation so instituted, the following are hereby named as parties upon which this notice of investigation shall be served:

(a) The complainant is—

Shur-Lok Corporation
2451 White Road
Irvine, California 92713

(b) The respondents are the following companies and are the parties upon which the complaint is to be served:

(i) The Young Engineers, Inc.
23151 Alcada Drive, B–5
Laguna Hills, California 92653—

is allegedly engaged in the unlawful importation of certain molded-in sandwich panel inserts into the United States, or in their sale, in the inducement of and/or contribution to the practice of certain methods for the installation of said inserts (said inserts and methods being covered by one or more claims of complainant's patents hereinabove specified), and in the misappropriation of complainant's trade secrets; and

(ii) C&D Plastics
5412 Argosy Drive
Huntington Beach, California 92649

Hitco Corporation
18662 MacArthur Boulevard
Irvine, California 92707

Composites Unlimited
17952 Cowan Street
Irvine, California 92714

U.O.P. Aerospace Division
7107 Jackson Street
Paramount, California 90723

Weber Aircraft
2820 Ontario Street
Burbank, California 91504—

are allegedly engaged in the unlawful use of certain imported molded-in sandwich panel inserts and in the unlawful practice of certain methods for their installation (said inserts and methods being covered by one or more claims of complainant's patents hereinabove specified);

(c) Ralph Elsas-Patrick, Unfair Import Investigations Division, U.S. International Trade Commission, 701 E Street NW., Washington, D.C. 20436, shall be the Commission investigative attorney, a party to this investigation;

Respondents named in paragraph (2)(b)(ii) above were not proposed by complainant but were named because allegations in the complaint so warrant.

(3) For the investigation so instituted, Donald K. Duvall, Chief Administrative Law Judge, U.S. International Trade Commission, 701 E Street NW., Washington, D.C. 20436, shall designate the presiding officer.

Responses must be submitted by the named respondents in accordance with section 210.21 of the Commission's Rules of Practice and Procedure (19 CFR 210.21). Pursuant to sections 201.16(d) and 210.21(b) of the rules, such responses will be considered by the Commission if received not later than 20 days after the date of service of the complaint. Extensions of time for submitting a response will not be granted unless good and sufficient cause therefor is shown.

Failure of a respondent to file a timely response to each allegation in the complaint and in this notice may be deemed to constitute a waiver of the right to appear and contest the allegations of the complaint and this notice, and to authorize the presiding officer and the Commission, without further notice to the respondent, to find the facts to be as alleged in the complaint and this notice and to enter both a recommended determination and a final determination containing such findings.

The complaint, except for any confidential information contained therein, is available for inspection during official working hours (8:45 a.m. to 5:15 p.m.) in the Office of the Secretary, U.S. International Trade Commission, 701 E Street NW., Washington, D.C. 20436, telephone 202–523–0161.

FOR FURTHER INFORMATION CONTACT: Ralph Elsas-Patrick, Unfair Import Investigations Division, U.S. International Trade Commission, telephone 202–523–0440.

By order of the Commission.

Issued: April 22, 1981.

KENNETH R. MASON,
Secretary.

Investigation No. 751–TA–2 (Formerly AA1921–66A)

TELEVISION RECEIVING SETS FROM JAPAN
ANNOUNCEMENT OF ADMINISTRATIVE DEADLINE

AGENCY: U.S. International Trade Commission.

ACTION: Establishment and announcement of administrative deadline.

SUMMARY: On December 17, 1980, the Commission announced an indefinite postponement and waiver of the administrative deadline in this investigation under section 751(b) of the Tariff Act of 1930 (45 F.R. 83088). The deadline was postponed until a sufficient number of purchasers and importers of television receiving sets from Japan responded to the Commission's questionnaires to provide it with adequate information to enable it to make an informed decision. The purpose of the investigation is to determine whether an industry in the United States would be materially injured, or would be threatened with material injury if the antidumping finding concerning television receiving sets from Japan were revoked.

The Commission hereby establishes a new administrative deadline of June 12, 1981, for notifying the Department of Commerce of its final determination in this investigation.

WRITTEN SUBMISSIONS: Only submissions in response to the statement of Orion Electric Co., Ltd., and Otake Trading Co., Ltd., which was received by the Commission on April 1, 1981, and responses to other developments that have occurred since the Commission's hearing on November 12 and 13, 1980, will be accepted. The final date for submissions to the record is May 8, 1981.

EFFECTIVE DATE: April 23, 1981.

FOR FURTHER INFORMATION CONTACT: Daniel F. Leahy, Jr., U.S. International Trade Commission, 701 E Street NW., Washington, D.C. 20436, 202–523–1369.

By order of the Commission.

Issued: April 23, 1981.

KENNETH R. MASON,
Secretary.

In the Matter of CERTAIN LARGE VIDEO MATRIX DISPLAY SYSTEMS AND COMPONENTS THEREOF	Investigation No. 337–TA–75

CHANGE IN TIME LIMIT FOR ORAL ARGUMENT ON VIOLATION

AGENCY: U.S. International Trade Commission.

ACTION: Change in time limit for argument on violation issue at Commission hearing on May 8, 1981.

SUMMARY: Upon a timely request by respondent SSIH Equipment S.A. showing need, the Commission has ordered that parties to the investigation be allowed 40 minutes for argument concerning the presiding officer's recommended determination at the May 8, 1981, hearing, rather than the 20 minutes specified in the notice of hearing, 46 F.R. 22995 (Apr. 22, 1981).

FOR FURTHER INFORMATION CONTACT: Michael B. Jennison, Esq., Office of the General Counsel, U.S. International Trade Commission, 202–532–0350.

By order of the Commission.

Issued: April 24, 1981.

KENNETH R. MASON,
Secretary.

Index

U.S. Customs Service

	T.D. No.
Treasury Decisions:	
Cotton and Manmade Fiber Textile Products—Restriction on Entry:	
Republic of Korea	81-110
Taiwan	81-111
Cotton and Textile Products—Restriction on Entry:	
Singapore	81-113
Romania	81-114
Cotton and Wool Textile Products—Restriction on Entry; Malaysia	81-112
Cotton, Wool, Manmade Fiber Textile Products—Restriction on Entry; Korea	81-109
Customs Regulations Amended, Section 159.34—Currency Rates of Exchange 8 countries to list	81-117
Foreign Currencies:	
Daily Certified Rates; April 6-10, 1981	81-115
Daily Certified Rates; April 13-17, 1981	81-116
	C.S.D. No.
Customs Service Decisions:	
Constructed Value: Uniform Application of Term "Assists" Throughout Section 402, Tariff Act of 1930, as Amended by Trade Agreements Act of 1979	81-91
Classification:	
Penpoint Assembly Consisting of Plastic Cone, Metal Ball, and Wick	81-77
Whether Fabric Labels on Women's Overalls Constituted Ornamentation	81-78
Tobacco Stems Returned Under Separate Package	81-79
Shoe Bottoming Machines and Molds Classifiable Under Items 678.10 and 680.11, TSUS, Respectively	81-83
Injection Molding Machines for Shoe Manufacture and Component Molds Classifiable Under Items 678.10 and 680.11, TSUS, Respectively	81-84
Line Safety Devices Classifiable as Machines in Item 678.50, TSUS	81-89
Electrical Modular or Perfusion System for Life Support Use During Coronary Surgery	81-90
Uri-Dip, Urine Testing Device	81-94
Drawback:	
Some Requirements of the Principal Agent Relationship Established by Treasury Decisions 55027(2) and 55027(1)	81-76
Commingling of Foreign and Domestic Orange Juice Concentrates as a Manufacturing Process for Drawback	81-81
Orange Juice To Satisfy the Requirement of the Substitution Drawback Law (19 U.S.C. 1313(b))	81-96

	C.S.D. NO.
Entry Requirements: Alcoholic Beverages: Entry Documentation in Broker's Name When BATF Permit is in Importer's Name	81-93
Foreign-Trade Zones: Customs Regulations Relating to Domestic Merchandise Transferred From Customs Territory Into or From FTZ Into Customs Territory	81-98
Foreign-Trade Zones: Destruction of Zone Restricted Merchandise, 19 U.S.C. 81c	81-100
Temporary Importation Under Bond: TIB's Canceled When Exporter Takes Possession of Merchandise Entered Under Bond	81-97
Transaction Value: Dutiability of Quota Payments	81-86
Value:	
Proper Method of Invoicing To Insure Bona Fide Buying Commissions Remain Nondutiable	81-87
Appraisement of Women's Wearing Apparel	81-92
Assists—Dutiability of Engineering Drawings and Specifications	81-99
Vessels:	
Denial of Remission of Duties Assessed Under 19 U.S.C. 1466 on Foreign Repairs Resultant of a Single Act of Negligence	81-80
Transport of Merchandise and Passengers by a Noncoastwise Vessel to Points on the Outer Continental Shelf or Within U.S. Territorial Waters	81-95
Vessel Stores, Supplies, and Equipment: Withdrawal of Supplies by One Vessel for Use by Another Vessel	81-85
Warehouse:	
Liability for Duties on Stolen Merchandise	81-82
Merchandise Withdrawn and Admitted into a Foreign-Trade Zone	81-88

DEPARTMENT OF THE TREASURY
U.S. CUSTOMS SERVICE
WASHINGTON, D.C. 20229

OFFICIAL BUSINESS
PENALTY FOR PRIVATE USE, $300

POSTAGE AND FEES PAID
DEPARTMENT OF THE TREASURY (CUSTOMS)
(TREAS. 552)

15/20

Customs Bulletin

Regulations, Rulings, Decisions, and Notices concerning Customs and related matters

and Decisions

of the United States Court of Customs and Patent Appeals and the United States Court of International Trade

Vol. 15 MAY 20, 1981 No. 20

This issue contains

T.D. 81-118 through 81-126
Slip. Op. 81-32 through 81-34
Protest Abstracts P81/52 through P81/57
Reap. Abstracts R81/131 through R81/141
International Trade Commission Notice

NEWARK PUBLIC LIBRARY

JUN 4,1981

U. S. GOVT. PUBS.
DEPOSITORY 376

THE DEPARTMENT OF THE TREASURY
U.S. Customs Service

T1.11/3:

NOTICE

The abstracts, rulings, and notices which are issued weekly by the U.S. Customs Service are subject to correction for typographical or other printing errors. Users may notify the U.S. Customs Service, Logistics Management Division, Washington, D.C. 20229, of any such errors in order that corrections may be made before the bound volumes are published.

For sale by the Superintendent of Documents, U.S. Government Printing Office, Washington, D.C. 20402. Price: $2.25 (single copy domestic); $2.85 (single copy foreign). Subscription price: $85.00 a year domestic; $106.25 a year foreign.

U.S. Customs Service

Treasury Decisions

(T.D. 81–118)

Cotton, Wool and Manmade Fiber Textile Products—Restriction on Entry

Restriction on entry of cotton, wool and manmade fiber textile products manufactured or produced in Mexico

There are published below directives of October 2, October 22, and December 18, 1980, received by the Commissioner of Customs from the Chairman, Committee for the Implementation of Textile Agreements, concerning restriction on entry of cotton, wool and manmade fiber textile products in certain categories manufactured or produced in Mexico. These directives amend, but do not cancel, that Committee's directive of December 18, 1979 (T.D. 80–53).

These directives were published in the Federal Register on October 7, October 27, and December 24, 1980 (45 FR 66491, 45 FR 66492, 45 FR 70960 and 45 FR 85142), by the Committee.

(QUO–2–1)

Dated: April 30, 1981.

RICHARD R. ROSETTIE,
Acting Director, Duty Assessment Division.

U.S. DEPARTMENT OF COMMERCE,
INTERNATIONAL TRADE ADMINISTRATION,
Washington, D.C., August 29, 1980.

Committee for the Implementation of Textile Agreements

COMMISSIONER OF CUSTOMS,
Department of the Treasury,
Washington, D.C. 20229.

DEAR MR. COMMISSIONER: This directive amends, but does not cancel, the directive of December 14, 1979 from the Chairman, Committee for the Implementation of Textile Agreements, concerning imports into the United States of certain cotton, wool and manmade fiber textile products, produced or manufactured in Singapore.

Under the terms of the Arrangement Regarding International Trade in Textiles done at Geneva on December 20, 1972, as extended on December 15, 1977; pursuant to the Bilateral Cotton, Wool and Man-Made Fiber Textile Agreement of September 21 and 22, 1978, as amended, between the Governments of the United States and the Republic of Singapore; and in accordance with the provisions of Executive Order 11651 of March 3, 1972, as amended by Executive Order 11951 of January 6, 1977, you are directed to prohibit, effective on August 29, 1980, and for the twelve-month period beginning on January 1, 1980 and extending through December 31, 1980, entry into the United States for consumption and withdrawal from warehouse for consumption of cotton textile products in Category 347/348, produced or manufactured in Singapore, in excess of the following adjusted level of restraint:

Category	*Adjusted 12-month level of restraint* [1]
347/348	528,675 dozen of which not more than 507,997 dozen shall be in category 347 and not more than 203,032 dozen shall be in category 348.

The action taken with respect to the Government of the Republic of Singapore and with respect to imports of cotton textile products from Singapore has been determined by the Committee for the Implementation of Textile Agreements to involve foreign affairs functions of the United States. Therefore, these directions to the Commissioner of Customs, which are necessary for the implementation of such actions, fall within the foreign affairs exception to the rule-making provisions of 5 U.S.C. 553. This letter will be published in the Federal Register.

Sincerely,

RONALD I. LEVIN,
Acting Chairman, Committee for the Implementation of Textile Agreements.

U.S. DEPARTMENT OF COMMERCE,
INTERNATIONAL TRADE ADMINISTRATION,
Washington, D.C., October 24, 1980.

Committee for the Implementation of Textile Agreements

COMMISSIONER OF CUSTOMS,
Department of the Treasury,
Washington, D.C. 20229.

DEAR MR. COMMISSIONER: On December 14, 1979, the Chairman

[1] The level of restraint has not been adjusted to reflect any imports after Dec. 31, 1979.

of the Committee for the Implementation of Textile Agreements directed you to prohibit entry for consumption, or withdrawal from warehouse for consumption during the 12-month period which began on January 1, 1980 and extends through December 31, 1980 of cotton, wool and man-made fiber textile products, produced or manufactured in Singapore, in certain specified categories, in excess of designated levels of restraint. The Chairman further advised you that the levels of restraint are subject to adjustment.[1]

Under the terms of the Arrangement Regarding International Trade in Textiles done at Geneva on December 20, 1973, as extended on December 15, 1977: pursuant to the Bilateral Cotton, Wool and Man-Made Fiber Textile Agreement of September 21 and 22, 1978, as amended, between the Governments of the United States and the Republic of Singapore; and in accordance with the provisions of Executive Order 11651 of March 3, 1972, as amended by Executive Order 11951 of January 6, 1977, you are directed to prohibit, effective on November 5, 1980, and for the 12-month period beginning on January 1, 1980 and extending through December 31, 1980, entry into the United States for consumption and withdrawal from warehouse for consumption of cotton textile products in Categories 347/348, produced or manufactured in Singapore, in excess of the following adjusted level of restraint. The sublimits for the category are being dropped for the current agreement year.

Category	*Adjusted 12-month level of restraint* [2]
347/348	644,412 dozen

The actions taken with respect to the Government of the Republic of Singapore and with respect to imports of cotton textile products from Singapore have been determined by the Committee for the Implementation of Textile Agreements to involve foreign affairs functions of the United States. Therefore, these directions to the Commissioner of Customs, which are necessary for the implementation of such actions, fall within the foreign affairs exception to the rule-making provisions of 5 U.S.C. 553. This letter will be published in the Federal Register.

Sincerely,

EDWARD GOTTFRIED,
Acting Chairman, Committee for the Implementation of Textile Agreements.

---

[1] The term "adjustment" refers to those provisions of the Bilateral Cotton, Wool and Man-Made Fiber Textile Agreement of Sept. 21 and 22, 1978, as amended, between the Governments of the United States and the Republic of Singapore which provide, in part, that: (1) within the aggregate and applicable group limits, specific limits and sublimits may be exceeded by designated percentages; (2) specific levels may be increased for carryover and carryforward up to 11 percent of the applicable category limit; and (3) administrative arrangements or adjustments may be made to resolve minor problems arising in the implementation of the agreement.

[2] The levels of restraint has not been adjusted to reflect any imports after Dec. 31, 1979.

U.S. DEPARTMENT OF COMMERCE,
INTERNATIONAL TRADE ADMINISTRATION,
Washington, D.C., December 30, 1980.

Committee for the Implementation of Textile Agreements

COMMISSIONER OF CUSTOMS,
Department of the Treasury,
Washington, D.C. 20229.

DEAR MR. COMMISSIONER: On December 14, 1979, the Chairman of the Committee for the Implementation of Textile Agreements directed you to prohibit entry for consumption, or withdrawal from warehouse for consumption during the twelve-month period which began on January 1, 1980 and extends through December 31, 1980 of cotton, wool and man-made fiber textile products, produced or manufactured in Singapore, in certain specified categories, in excess of designated levels of restraint. The Chairman further advised you that the levels of restraint are subject to adjustment.[1]

Under the terms of the Arrangement Regarding International Trade in Textiles done at Geneva on December 20, 1973, as extended on December 15, 1977; pursuant to the Bilateral Cotton, Wool and Man-Made Fiber Textile Agreement of September 21 and 22, 1978, as amended, between the Governments of the United States and Singapore; and in accordance with the provisions of Executive Order 11651 of March 3, 1972, as amended by Executive Order 11951 of January 6, 1977, you are directed to prohibit, effective on January 9, 1981 and for the twelve-month period beginning on January 1, 1980 and extending through December 31, 1980, entry into the United States for consumption and withdrawal from warehouse for consumption of cotton textile products in Category 317, produced or manufactured in Singapore, in excess of 14,740,272 square yards.[2]

The actions taken with respect to the Government of Republic of Singapore and with respect to imports of cotton textile products from Singapore have been determined by the Committee for the Implementation of Textile Agreements to involve foreign affairs functions of the United States. Therefore, these directions to the Commissioner of Customs, which are necessary for the implementation of such actions,

---

[1] The term "adjustment" refers to those provisions of the Bilateral Cotton Textile Agreement of Sept. 21 and 22, 1978, as amended, between the Governments of the United States and the Republic of Singapore which provide, in part, that: (1) within the aggregate and applicable group limits, specific limits and sublimits may be exceeded by designated percentages; (2) specific levels may be increased for carryover and carryforward up to 11 percent of the applicable category limit; and (3) administrative arrangements or adjustments may be made to resolve minor problems arising in the implementation of the agreement.

[2] The level of restraint has not been adjusted to reflect any imports after Dec. 31, 1979.

fall within the foreign affairs exception to the rule-making provisions of 5 U.S.C. 553. This letter will be published in the FEDERAL REGISTER.

Sincerely,

PAUL T. O'DAY,
Chairman, Committee for the Implementation of Textile Agreements.

(T.D. 81–119)

Cotton Textile Products—Restriction on Entry

Restriction on entry of cotton textile products manufactured or produced in Singapore

There are published below directives of August 29, October 24 and December 30, 1980, received by the Commissioner of Customs from the Chairman, Committee for the Implementation of Textile Agreements, concerning restriction on entry of cotton textile products in certain categories manufactured or produced in Singapore. These directives amend, but do not cancel, that Committee's directive of December 14, 1979 (T.D. 80–50).

The directives were published in the Federal Register on September 4, 1980 (45 FR 58741), October 29, 1980 (45 FR 64228), and January 6, 1981 (46 FR 1331), by the Committee.

(QUO–2–1)

Dated: April 30, 1981.

RICHARD R. ROSETTIE,
Acting Director, Duty Assessment Division.

U.S. DEPARTMENT OF COMMERCE,
INTERNATIONAL TRADE ADMINISTRATION,
Washington, D.C., October 2, 1980.

Committee for the Implementation of Textile Agreements

COMMISSIONER OF CUSTOMS,
Department of the Treasury,
Washington, D.C. 20229.

DEAR MR. COMMISSIONER: This directive further amends, but does not cancel, the directive issued to you on December 18, 1980 by the Chairman, Committee for the Implementation of Textile Agreements, concerning imports into the United States of certain cotton and man-made fiber textile products, produced or manufactured in Mexico.

Under the terms of the Arrangement Regarding International

Trade in Textiles done at Geneva on December 20, 1973, as extended on December 15, 1977; pursuant to the Bilateral Cotton, Wool and Man-Made Textile Agreement of February 26, 1979, as amended, between the Governments of the United States and Mexico; and in accordance with the provisions of Executive Order 11651 of March 3, 1972, as amended by Executive Order 11951 of January 6, 1977, you are directed to prohibit, effective on October 7, 1980, and for the 12-month period beginning on January 1, 1980 and extending through December 31, 1980, entry into the United States for consumption and withdrawal from warehouse for consumption of cotton and man-made fiber textile products in the following categories, produced or manufactured in Mexico in excess of the following levels of restraint:

Category	*Amended 12-month level of restraint* [1]
359	652,174 pounds.
604 (only T.S.U.S. No. 310.5049)	914,634 pounds.

The actions taken with respect to the Government of Mexico and with respect to imports of cotton and man-made fiber textile products from Mexico have been determined by the Committee for the Implementation of Textile Agreements to involve foreign affairs functions of the United States. Therefore, these directions to the Commissioner of Customs, which are necessary for the implementation of such actions, fall within the foreign affairs exception to the rule-making provisions of 5 U.S.C. 553. This letter will be published in the Federal Register.

Sincerely,

PAUL T. O'DAY,
Chairman, Committee for the Implementation of Textile Agreements.

U.S. DEPARTMENT OF COMMERCE,
INTERNATIONAL TRADE ADMINISTRATION,
Washington, D.C., October 2, 1980.

Committee for the Implementation of Textile Agreements

COMMISSIONER OF CUSTOMS,
Department of the Treasury,
Washington, D.C. 20229.

DEAR MR. COMMISSIONER: This directive further amends, but does not cancel, the directive issued to you on December 18, 1979, by the

[1] The levels of restraint have not been adjusted to reflect any imports after Dec. 31, 1979.

Chairman, Committee for the Implementation of Textile Agreements, concerning imports into the United States of certain cotton, wool and man-made fiber textile products, produced or manufactured in Mexico.

Under the terms of the Arrangement Regarding International Trade in Textiles done at Geneva on December 20, 1973, as extended on December 15, 1977; pursuant to the Bilateral Cotton, Wool and Man-Made Fiber Textile Agreement of February 26, 1979, as amended, between the Governments of the United States and Mexico; and in accordance with the provisions of Executive Order 11651 of March 3, 1972, as amended by Executive Order 11951 of January 6, 1977, you are directed to prohibit, effective on October 7, 1980, and for the 12-month period beginning on January 1, 1980 and extending through December 31, 1980, entry into the United States for consumption, and withdrawal from warehouse for consumption, of wool and man-made fiber textile products in the following categories, produced or manufactured in Mexico, in excess of the following levels of restraint:

Category	*12-month level of restraint* [1]
436	2,033 dozen.
641	229,938 dozen.

Textile products in Category 436 which have been exported to the United States prior to January 1, 1980 shall not be subject to this directive.

Textile products in Category 436 which have been released from the custody of the U.S. Customs Service under the provisions of 19 U.S.C. 1448(b) or 1484(a)(1)(A) prior to the effective date of this directive shall not be denied entry under this directive.

In carrying out the above directions, the Commissioner of Customs should construe entry into the United States for consumption to include entry for consumption into the Commonwealth of Puerto Rico.

The actions taken with respect to the Government of Mexico and with respect to imports of wool and man-made fiber textile products from Mexico have been determined by the Committee for the Implementation of Textile Agreements to involve foreign affairs functions of the United States. Therefore, these directions to the Commissioner of Customs, which are necessary for the implementation of such actions, fall within the foreign affairs exception to the rule-making provisions of 5 U.S.C. 553. This letter will be published in the Federal Register.

Sincerely,

PAUL T. O'DAY,
Chairman, Committee for the
Implementation of Textile Agreements.

---

[1] The level of restraint has not been adjusted to reflect any entries after Dec. 31, 1979. Imports during the January-July 1980 period have amounted to 1,610 dozen in Category 436.

U.S. DEPARTMENT OF COMMERCE,
INTERNATIONAL TRADE ADMINISTRATION,
Washington, D.C., October 22, 1980.

Committee for the Implementation of Textile Agreements

COMMISSIONER OF CUSTOMS,
Department of the Treasury,
Washington, D.C. 20229.

DEAR MR. COMMISSIONER: On December 18, 1979, the Chairman, Committee for the Implementation of Textile Agreements, directed you to prohibit entry during the twelve-month period beginning on January 1, 1980 and extending through December 31, 1980 of cotton, and man-made fiber textile products in certain specified categories, produced or manufactured in Mexico, in excess of designated levels of restraint. The Chairman further advised you that the levels of restraint are subject to adjustment.[1]

Under the terms of the Arrangement Regarding International Trade in Textiles done at Geneva on December 20, 1973, as extended on December 15, 1977; pursuant to the Bilateral Cotton, Wool and Man-Made Fiber Textile Agreement of February 26, 1979, as amended, between the Governments of the United States and Mexico; and in accordance with the provisions of Executive Order 11651 of March 3, 1972, as amended by Executive Order 11951 of January 6, 1977, you are directed, effective on October 22, 1980, to increase the 12-month level of restraint for Category 641 to 281,020 dozen.[2]

The action taken with respect to the Government of Mexico and with respect to imports of man-made fiber textile products from Mexico have been determined by the Committee for the Implementation of Textile Agreements to involve foreign affairs functions of the United States. Therefore, these directions to the Commissioner of Customs, being necessary to the implementation of such actions, fall within the foreign affairs exception to the rule-making provisions of 5 U.S.C. 553. This letter will be published in the Federal Register.

Sincerely,

RONALD I. LEVIN,
Acting Chairman, Committee for the Implementation of Textile Agreements.

---

[1] The term "adjustmen." refers to those provisions of the Bilateral Cotton, Wool and Man-Made Fiber Textile Agreement of Feb. 26, 1979, as amended, between the Governments of the United States and Mexico which provide, in part, that: (1) specific limits or specific sublimits may be exceeded by not more than seven percent in any agreement period; (2) these same limits may be increased for carryover and carryforward up to 11 percent of the applicable category limit or sublimit; and (3) administrative arrangements or adjustments may be made to resolve minor problems arising in the implementation of the agreement.

[2] The level of restraint has not been adjusted to eflect any imports after Dec. 31, 1979.

U.S. DEPARTMENT OF COMMERCE,
INTERNATIONAL TRADE ADMINISTRATION,
Washington, D.C., December 18, 1980.

Committee for the Implementation of Textile Agreements

COMMISSIONER OF CUSTOMS,
Department of the Treasury,
Washington, D.C. 20229.

DEAR MR. COMMISSIONER: On December 18, 1979, the Chairman, Committee for the Implementation of Textile Agreements, directed you to prohibit entry during the twelve-month period beginning on January 1, 1980 and extending through December 31, 1980 of cotton, and man-made fiber textile products in certain specified categories, produced or manufactured in Mexico, in excess of designated levels of restraint. The directive of December 18, 1979 was amended by a directive dated October 2, 1980 concerning wool textile products in Category 436.

Under the terms of the Arrangement Regarding International Trade in Textiles done at Geneva on December 20, 1973, as extended on December 15, 1977; pursuant to the Bilateral Cotton, Wool and Man-Made Fiber Textile Agreement of February 26, 1979, as amended, between the Governments of the United States and Mexico; and in accordance with the provisions of Executive Order 11651 of March 3, 1972, as amended by Executive Order 11951 of January 6, 1977, you are directed, effective on December 18, 1980, to increase the 12-month level of restraint established for Category 436 to 2,642 dozen.[1]

The actions taken with respect to the Government of Mexico and with respect to imports of wool textile products from Mexico have been determined by the Committee for the Implementation of Textile Agreements to involve foreign affairs functions of the United States. Therefore, these directions to the Commissioner of Customs, which are necessary for the implementation of such actions, fall within the foreign affairs exception to the rule-making provisions of 5 U.S.C. 553. This letter will be published in the Federal Register.

Sincerely,

PAUL T. O'DAY,
Chairman, Committee for the
Implementation of Textile Agreements.

---

[1] The level of restraint has not been adjusted to reflect any imports after Dec. 31, 1979.

(T.D. 81-120)

FIS-9-05-CM:F:A:O

Reimbursable Services—Excess Cost of Preclearance Operations

DEPARTMENT OF THE TREASURY,
OFFICE OF THE COMMISSIONER OF CUSTOMS,
Washington, D.C., May 4, 1981.

Notice is hereby given that pursuant to section 24.18(d), Customs Regulations (19 CFR 24.18(d)), the biweekly reimbursable excess costs for each preclearance installation are determined to be as set forth below and will be effective with the pay period beginning May 17, 1981.

Installation:	*Biweekly excess cost*
Montreal, Canada	$16,942
Toronto, Canada	29,581
Kindley Field, Bermuda	6,813
Nassau, Bahama Islands	18,628
Vancouver, Canada	15,057
Winnipeg, Canada	4,144
Freeport, Bahama Islands	10,597
Calgary, Canada	8,944
Edmonton, Canada	5,682

JACK T. LACEY,
Comptroller.

(T.D. 81-121)

Bonds

Approval and discontinuance of Carrier's Bonds, Customs Form 3587

Bonds of carriers for the transportation of bonded merchandise have been approved or discontinued as shown below. The symbol "D" indicates that the bond previously outstanding has been discontinued on the month, day, and year represented by the figures which follow. "PB" refers to a previous bond, dated as represented by figures in parentheses immediately following, which has been discontinued. If the previous bond was in the name of a different company or if the surety was different, the information is shown in a footnote at the end of the list.

Dated: May 4, 1981.

Name of principal and surety	Date of bond	Date of approval	Filed with district director/area director/amount
AAA Special Dispatch, Inc., Cargo Rd Door No. 19, Greater Cincinnati Airport, P.O.B. 75124, Cincinnati, OH; motor carrier; St. Paul Fire & Marine Ins. Co.	Mar. 12, 1981	Mar. 20, 1981	Cleveland, OH $50,000
Aceves Trucking Co., 1038 12th St., Imperial Beach, CA; motor carrier; St Paul Fire & Marine Ins. Co.	Nov. 18, 1980	Mar. 18, 1981	San Diego, CA $25,000
All-Pro Transport Lines Inc., 8900 N.W. 70th Ave., Miami, FL; motor carrier; St. Paul Fire & Marine Ins. Co.	Jan. 29, 1981	Mar. 13, 1981	Miami, FL $25,000
Barker Transportation, 224 Stratus, El Paso, TX; contract motor carier; American Employers Ins. Co.	Mar. 23, 1981	Mar. 24, 1981	El Paso, TX $25,000
Brook Warehousing System, P.O. Box 506, Manville, NJ; motor carrier; Washington International Ins. Co.	Mar. 12, 1981	Apr. 8, 1981	Newark, NJ $50,000
Caribbean Transportation, Inc., P.O.B. 015444, Miami, FL; motor carrier; St. Paul Fire & Marine Ins. Co.	Jan. 30, 1980	Mar. 17, 1981	Miami, FL $25,000
Clavin Express, Inc., 54 Water St., East Providence, RI; motor carrier; The Continental Ins. Co. D 3/31/81	Oct. 16, 1979	Feb. 25, 1980	Providence, RI $25,000
Burt Clifford Transport, 1202 Hwy 18E, Kingsville, Ontario, Canada; motor carrier; Royal Indemnity Co.	Oct. 16, 1980	Mar. 11, 1981	Detroit, MI $50,000
Concord Trucking, Ltd., New Dayton, Alberta, Canada; motor carrier; The Aetna Casualty & Surety Co. D 4/10/81	Sept. 1, 1980	Sept. 16, 1980	Great Falls, MT $25,000
Crescent Trucking, Inc., 120 Eastern Ave., Chelsea, MA; motor carrier; Peerless Ins. Co. (PB 2/21/78) D 3/5/81 [1]	Feb. 21, 1981	Mar. 5, 1981	Boston, MA $25,000
W. J. Digby, Inc. 6015 E. 58th Ave., Commerce City, CO; motor carrier; Old Republic Ins. Co. (PB 10/13/78) D 3/12/81 [2]	Feb. 5, 1981	Mar. 12, 1981	El Paso, TX $25,000
G. F. C., Inc., 227 Old Dominion Dr., Charleston, SC; motor carrier; Aetna Casualty & Surety Co.	Mar. 3, 1981	Mar. 12, 1981	Charleston, SC $25,000
Garafalo & Sons, Inc., 246 Johnson Ave., Jersey City, NJ; motor carrier; St. Paul Fire & Marine Ins. Co. D 12/8/80	July 24, 1970	Aug. 3, 1970	New York, NY $25,000
Intermodal Services, Inc., 11650 Courthouse Blvd., Inver Grove Heights, MN; motor carrier; United States Fidelity & Guaranty Co.	Feb. 16, 1981	Mar. 6, 1981	Minneapolis, MN $50,000
Jones Truck Lines, 610 E. Emma Ave., Springdale, AR; motor carrier; Federal Ins. Co. (PB 1/21/77) D 3/17/81 [3]	Mar. 17, 1981	Mar. 17, 1981	New Orleans, LA $25,000
Keo Transportation Co., 1830 E. 21st St., Jacksonville, FL; motor carrier; U.S. Fidelity & Guaranty Co.	Jan. 7, 1981	Feb. 25, 1981	Tampa, FL $25,000

Name of principal and surety	Date of bond	Date of approval	Filed with district director/area director/amount
Minnesota-Wisconsin Truck Lines, Inc., 965 Eustis St., St. Paul, MN; motor carrier; Liberty Mutual Ins. Co. D 3/11/81	Aug. 25, 1971	Sept. 28, 1971	Minneapolis, MN $25,000
Pacific Midwestern Express Ltd., Box 181, Gr 261 RR #2 Winnipeg, Man. R3C 2E6; motor carrier; St. Paul Fire & Marine Ins. Co.	Mar. 5, 1981	Mar. 19, 1981	Pembina, ND $25,000
Roberts Cartage of Ohio Inc., 2088 Arlington Rd., Akron, OH; motor carrier; Buckeye Union Ins. Co. (PB 12/1/76) D 2/24/81	Nov. 25, 1980	Feb. 24, 1981	Cleveland, OH $50,000
Trinity, Inc., 197 W. Central St., Natick, MA; motor carrier; American Ins. Co.	Jan. 15, 1981	Mar. 19, 1981	Boston, MA $25,000

[1] Surety is The Aetna Casualty & Surety Co.
[2] Surety is St. Paul Fire & Marine Ins. Co.
[3] Surety is The Aetna Casualty & Surety Co.

BON-3-03

GEORGE C. STEUART
(For Marilyn G. Morrison, Director,
Carriers, Drawback, and Bonds Division).

(T.D. 81-122)

Synopses of Drawback Decisions

The following are synopses of drawback rates issued January 15, 1981, to March 12, 1981, inclusive, pursuant to sections 22.1 through 22.5, inclusive, Customs Regulations.

In the synopses below are listed for each drawback rate approved under 19 U.S.C. 1313(a), the name of the company, the specified articles on which drawback is authorized, the merchandise which will be used to manufacture or produce these articles, the factories where the work will be accomplished, the date the statement was signed, the basis for determining payment, the Regional Commissioner who issued the rate, and the date on which it was signed.

DRA-1-09

File: 212945.
Dated: May 5, 1981.

MARILYN G. MORRISON,
Director, Carriers, Drawback, and Bonds Division.

(A) Company: Audio Systems, d/b/a A.S.I.
Articles: Automotive radios, speakers, and antennas.

Merchandise: Imported partially assembled radios, speakers and antennas and also miscellaneous parts, such as wiring, nuts, bolts and terminals.
Factory: Louisville, KY.
Statement signed: February 11, 1981.
Basis of claim: Used in.
Rate issued by Regional Commissioner of Customs: Chicago, February 23, 1981.

(B) Company: American Koyo Bearing Manufacturing Corp.
Articles: Ball bearings and tapered roller bearings.
Merchandise: Imported steel bars, steel balls, metal retainers, rubberized seals, metal shields, metal rivets, steel coils, and semi-finished tapered roller bearings with outer rings and inner rings.
Factory: Orangeburg, SC.
Statement signed: December 18, 1980.
Basis of claim: Used in, less valuable waste.
Rate issued by Regional Commissioner of Customs: Miami, January 29, 1981.

(C) Company: B.P. Woodgrain Paneling, Inc.
Articles: Prefinished plywood wall paneling.
Merchandise: Imported plywood.
Factory: Elkhart, IN.
Statement signed: November 10, 1980.
Basis of claim: Used in, less valuable waste.
Rate issued by Regional Commissioner of Customs: Chicago, February 25, 1981.

(D) Company: Berg Steel Pipe Corp.
Articles: Steel pipe.
Merchandise: Imported steel plates.
Factory: Panama City, FL.
Statement signed: January 5, 1981.
Basis of claim: Appearing in.
Rate issued by Regional Commissioner of Customs: New Orleans, March 5, 1981.

(E) Company: Butler Sparks Machinery Co.
Articles: Portable hydrascreens.
Merchandise: Imported hydrascreen subassemblies.
Factory: Oklahoma City, OK.
Statement signed: November 18, 1980.
Basis of claim: Used in.

Rate issued by Regional Commissioner of Customs: San Francisco, January 28, 1981.

(F) Company: Calgon Corp.
Articles: Activated carbon (various types).
Merchandise: Imported activated carbon (various types).
Factory: Pittsburgh, PA.
Statement signed: June 19, 1980.
Basis of claim: Used in.
Rate issued by Regional Commissioner of Customs: Baltimore, February 5, 1981.

(G) Company: Calumet Refining Co., a div. of Calumet Industries Inc.
Articles: ECA5185, an additive for railroad diesel lubricants.
Merchandise: Imported Paranox 105, a polyamine-amide mixture.
Factory: Chicago, IL.
Statement signed: November 3, 1980.
Basis of claim: Used in.
Rate issued by Regional Commissioner of Customs: New York, January 22, 1981.

(H) Company: Coast Oyster Co.
Articles: Canned clam nectar, clam chowder and oyster stew.
Merchandise: Imported can bodies and can ends.
Factory: South Bend, WA.
Statement signed: January 14, 1981.
Basis of claim: Used in.
Rate issued by Regional Commissioner of Customs: San Francisco, February 2, 1981.

(I) Company: E. I. du Pont de Nemours & Co.
Articles: Finished graphic arts and industrial film.
Merchandise: Imported sensitized graphic arts and industrial film (widestock rolls).
Factories: Brevard, NC; Parlin, NJ; Rochester, NY.
Statement signed: December 15, 1980.
Basis of claim: Appearing in.
Rate issued by Regicnal Commissioner of Customs: Baltimore, January 27, 1981.

(J) Company: Elkem Holloway, Inc.
Articles: Steel wire rope slings and steel wire rope.
Merchandise: Imported steel wire rope.
Factory: Harahan, LA.

Statement signed: January 29, 1981.
Basis of claim: Used in.
Rate issued by Regional Commissioner of Customs: New Orleans, February 6, 1981.

(K) Company: Elkem Holloway, Inc.
Articles: Wire rope slings.
Merchandise: Imported steel wire rope and fitting.
Factory: Houston, TX.
Statement signed: January 29, 1981.
Basis of claim: Used in.
Rate issued by Regional Commissioner of Customs: Houston, February 17, 1981.

(L) Company: H. B. Fuller Co.
Articles: Hot melt sealants.
Merchandise: Imported polysar butyl rubber.
Factory: Minneapolis, MN.
Statement signed: January 26, 1981.
Basis of claim: Used in.
Rate issued by Regional Commissioner of Customs: Chicago, February 3, 1981.

(M) Company: Hercules, Inc.
Articles: Antor technical (a herbicide).
Merchandise: Imported ethyl monochloroacetate (EMCA) and monochloroacetyl chloride (MCAC).
Factory: Wilmington, DE.
Statement signed: November 12, 1980.
Basis of claim: Used in.
Rate issued by Regional Commissioner of Customs: Baltimore, January 28, 1981.

(N) Company: Hewlett-Packard Co.
Articles: Memory boards, analytical instruments, computers, terminals, calculators, medical instruments and computer peripherals.
Merchandise: Imported 16K dynamic random access memories (RAM).
Factories: Various factories as listed in manufacturer's statement.
Statement signed: January 27, 1981.
Basis of claim: Appearing in.
Rate issued by Regional Commissioner of Customs: San Francisco, February 17, 1981.

346-392 O - 3

(O) Company: Hoyt Archery Co., Inc.
Articles: T/D archery limbs.
Merchandise: Imported Bjorn glass lamination strips.
Factory: Bridgeton, MO.
Statement signed: February 18, 1981.
Basis of claim: Used in.
Rate issued by Regional Commissioner of Customs: Chicago, February 26, 1981.

(P) Company: Lister Diesels Inc.
Articles: Complete diesel engines.
Merchandise: Imported incomplete diesel engines, engine blocks, engine CKD kits, and engine parts.
Factory: Olathe, KS.
Statement signed: December 20, 1979.
Basis of claim: Used in, less valuable waste.
Rate issued by Regional Commissioner of Customs: New York, February 9, 1981.

(Q) Company: Orrville Products, Inc.
Articles: Completely built up tractor cabs.
Merchandise: Imported completely knocked down tractor cabs.
Factory: Orrville, OH.
Statement signed: October 1, 1980.
Basis of claim: Used in.
Rate issued by Regional Commissioner of Customs: New York, March 4, 1981.

(R) Company: Qume Corp.
Articles: DataTrak 8 floppy disk drives and DataTrak 5 floppy disk drives.
Merchandise: Imported stepper motors, drive motor assemblies, upper and lower heads, drive motors without printed circuit boards, head gimbal assemblies.
Factories: San Jose and Hayward, CA.
Statement signed: October 29, 1980.
Basis of claim: Appearing in.
Rate issued by Regional Commissioner of Customs: San Francisco, January 15, 1981.

(S) Company: Sperry Univac, Division of Sperry Corp.
Articles: Sperry Univac type 0777 printers.
Merchandise: Imported laser printer mechanisms and casework.
Factory: Bristol, TN.
Statement signed: February 2, 1981.

Basis of claim: Used in.
Rate issued by Regional Commissioner of Customs: New York, March 2, 1981.

(T) Company: Syntex Laboratories, Inc.
Articles: Noriday tablets (1.0 mg).
Merchandise: Imported norethindrone.
Factory: Palo Alto, CA.
Statement signed: February 2, 1981.
Basis of claim: Used in.
Rate issued by Regional Commissioner of Customs: San Francisco, February 18, 1981.

(U) Company: Tennessee Eastman Co., Div. of Eastman Kodak Co.
Articles: Various dyes.
Merchandise: Imported benzenoid chemicals.
Factory: Kingsport, TN.
Statement signed: January 30, 1981.
Basis of claim: Used in.
Rate issued by Regional Commissioner of Customs: Baltimore, March 4, 1981.

(V) Company: Ultra Poly, Inc.
Articles: Ultra high molecular weight polyethylene sheets, rods, and various other forms.
Merchandise: Imported polyethylene resins.
Factory: Tacoma, WA.
Statement signed: February 19, 1981.
Basis of claim: Appearing in.
Rate issued by Regional Commissioner of Customs: San Francisco, March 12, 1981.

(W) Company: United States Tobacco Co., Inc.
Articles: Cased tobacco.
Merchandise: Imported manufactured and unmanufactured tobacco, unstemmed burley leaf tobacco and burley scrap tobacco.
Factory: Richmond, VA.
Statement signed: October 31, 1980.
Basis of claim: Used in.
Rate issued by Regional Commissioner of Customs: Miami, January 29, 1981.

(X) Company: United Technologies Corp., Power Systems Div.
Articles: Gas turbine power systems and sub-assemblies.

Merchandise: Imported parts used in the manufacture of gas turbine power systems.
Factory: United, FL.
Statement signed: December 12, 1980.
Basis of claim: Appearing in.
Rate issued by Regional Commissioner of Customs: New York, February 9, 1981.

(Y) Company: Welsh Forest Products, Inc.
Articles: Prefinished paper overlay plywood paneling; prefinished paper overlay hardboard paneling.
Merchandise: Imported plywood and hardboard substrates.
Factory: East Camden, AR.
Statement signed: January 26, 1981.
Basis of claim: Used in.
Rate issued by Regional Commissioner of Customs: New Orleans, February 5, 1981.

(Z) Company: Williams Form Engineering Corp.
Articles: Rock and concrete anchor bolts.
Merchandise: Imported deformed hollow reinforcing bar steel.
Factory: Grand Rapids, MI.
Statement signed: October 20, 1980.
Basis of claim: Appearing in.
Rate issued by Regional Commissioner of Customs: New York, February 9, 1981.
Revokes: T.D. 80–154–Y.

(T.D. 81–123)

Synopses of Drawback Decisions

The following are synopses of drawback rates issued July 25, 1980, to March 23, 1981, inclusive, pursuant to sections 22.1 through 22.5, inclusive, Customs Regulations.

In the synopses below are listed for each drawback rate approved under 19 U.S.C. 1313(b), the name of the company, the specified articles on which drawback is authorized, the merchandise which will be used to manufacture or produce these articles, the factories where the work will be accomplished, the date the statement was signed, the basis for determining payment, the Regional Commissioner to

whom the rate was forwarded or issued by, and the date on which it was forwarded or issued.

Dated: May 5, 1981.

File: 212944.

(DRA-1-09)

MARILYN G. MORRISON,
Director, Carriers, Drawback, and Bonds Division.

(A) Company: Ansul Co.
Articles: Hydroquinone monomethyl ether (HA); Dimethyl ether of Hydroquinone (DMB).
Merchandise: Hydroquinone (HQ).
Factory: Marinette, WI.
Statement signed: December 3, 1980.
Basis of claim: Used in, with distribution to the products obtained in accordance with their relative value at the time of separation.
Rate forwarded to Regional Commissioner of Customs: Chicago, March 20, 1981.

(B) Company: Carstab Corp.
Articles: Plastic stabilizers; Iso octyl thioglycolate (TO–8).
Merchandise: Iso Octyl Thioglycolate (TO–8); Thioglycolic acid.
Factory: Reading, OH.
Statement signed: December 16, 1980.
Basis of claim: Appearing in.
Rate forwarded to Regional Commissioner of Customs: New York, March 16, 1981.
Revokes: T.D. 78–397–G.

(C) Company: Carstab Corp.
Articles: 4-methyl-7-diethylaminocoumarin (MDAC) (flourescent brighteners).
Merchandise: Diethylmetaaminophenol.
Factory: Reading, OH.
Statement signed: December 16, 1980.
Basis of claim: Used in.
Rate forwarded to Regional Commissioner of Customs: New York, March 17, 1981.
Revokes: T.D. 78–397–H.

(D) Company: Carstab Corp.
Articles: Plastic stabilizers.
Merchandise: 2-mercaptoethanol.
Factory: Reading, OH.
Statement signed: December 16, 1980.

Basis of claim: Appearing in.
Rate forwarded to Regional Commissioner of Customs: New York, March 17, 1981.
Revokes: T.D. 78–397–I.

(E) Company: Carville Leather Co., Inc.
Articles: Pigment colored and surface textured leather.
Merchandise: Leather in the rough, partially finished or finished.
Factory: Johnstown, NY.
Statement signed: May 27, 1980.
Basis of claim: Appearing in.
Rate forwarded to Regional Commissioner of Customs: New York, March 23, 1981.

(F) Company: Coastal Beverages, Inc.
Articles: Canned and bottled carbonated and non-carbonated beverages.
Merchandise: Hard and liquid refined sugar; liquid refined invert sugar.
Factory: Dothan, AL.
Statement signed: April 16, 1980.
Basis of claim: Used in.
Rate issued by Regional Commissioner of Customs in accordance with section 22.4(o)(2): New York, November 20, 1980.
Revokes: T.D. 79–259–F, to cover successorship from Pepsi-Cola Bottling Co. of Dothan, Alabama, Inc.

(G) Company: Cooper Tire & Rubber Co.
Articles: Rubber tires; inner tubes.
Merchandise: Butyl, chlorobutyl, polybutadiene and styrene butadiene (all the foregoing synthetic rubber); bronze plated bead wire; steel tire cord.
Factories: Findlay and Bowling Green, OH; Texarkana and El Dorado, AR; Clarksdale, MS; Auburn, IN.
Statement signed: December 10, 1980.
Basis of claim: Appearing in.
Rate forwarded to Regional Commissioner of Customs: Chicago, March 4, 1981.

(H) Company: Crescent Leather Finishing Co., Inc.
Articles: Pigment colored and surface textured leather.
Merchandise: Leather in the rough, partially finished or finished.
Factory: Johnstown, NY.
Statement signed: June 20, 1980.
Basis of claim: Appearing in.

Rate forwarded to Regional Commissioner of Customs: New York, March 23, 1981.

(I) Company: Dow Chemical Co.
Articles: Plictran 25–W; Plictran 50–W.
Merchandise: Tricyclohexyltin hydroxide.
Factory: Midland, MI.
Statement signed: December 22, 1980.
Basis of claim: Used in.
Rate forwarded to Regional Commissioner of Customs: Chicago, March 13, 1981.

(J) Company: Eastman Kodak Co.
Articles: Coupler intermediate PM 3770.
Merchandise: 4'4-dihydroxydiphenyl sulfone.
Factories: Kingsport, TN; Batesville, AK.
Statement signed: July 10, 1980.
Basis of claim: Used in.
Rate forwarded to Regional Commissioner of Customs: Baltimore, March 3, 1981.

(K) Company: Ellithorp Tanning Co., Inc.
Articles: Pigment colored and surface textured leather.
Merchandise: Leather in the rough, partially finished or finished.
Factory: Gloversville, NY.
Statement signed: May 22, 1980.
Basis of claim: Appearing in.
Rate forwarded to Regional Commissioner of Customs: New York, March 23, 1981.

(L) Company: Exide Corp.
Articles: Lead acid batteries.
Merchandise: Lead.
Factories: Allentown, PA; Atlanta, GA; Buffalo, NY; Dallas, TX; Fairfield, CT; Richmond, KY; Sumter, SC; Los Angeles and Milpitas, CA.
Statement signed: January 6, 1981.
Basis of claim: Appearing in.
Rate forwarded to Regional Commissioner of Customs: Baltimore, March 20, 1981.
Revokes: T.D. 80–297–J.

(M) Company: Fashion Tanning Co., Inc.
Articles: Pigment colored and surface textured leather.
Merchandise: Leather in the rough, partially finished or finished.

Factory: Gloversville, NY.
Statement signed: May 20, 1980.
Basis of claim: Appearing in.
Rate forwarded to Regional Commissioner of Customs: New York, March 23, 1981.

(N) Company: Foster Leather Co., Inc.
Articles: Pigment colored and surface textured leather.
Merchandise: Leather in the rough, partially finished or finished.
Factory: Salem, MA.
Statement signed: June 20, 1980.
Basis of claim: Appearing in.
Rate forwarded to Regional Commissioner of Customs: New York, March 23, 1981.

(O) Company: Hewlett-Packard Co.
Articles: Memory boards, analytical instruments, computers, terminals, calculators, medical instruments and computer peripherals.
Merchandise: 16K dynamic random access memories (RAM).
Factories: Various factories as listed in manufacturer's statement.
Statement signed: November 10, 1980.
Basis of claim: Appearing in.
Rate issued by Regional Commissioner of Customs in accordance with section 22.4 (o)(2): San Francisco, January 15, 1981.
Revokes: T.D. 80–280–I to cover change in name from Hewlett-Packard Corp.

(P) Company: Interknitting Ltd.
Articles: Knitted fabrics for draperies and curtains.
Merchandise: Polyester yarn.
Factory: Cobleskill, NY.
Statement signed: February 25, 1981.
Basis of claim: Appearing in.
Rate forwarded to Regional Commissioner of Customs: New York, March 20, 1981.

(Q) Company: Leather's Best, Inc.
Articles: Pigment colored and surface textured leather.
Merchandise: Leather in the rough, partially finished or finished.
Factories: Johnstown, NY (3); Gloversville, NY (2); Salem, MA.
Statement signed: January 15, 1981.
Basis of claim: Appearing in.
Rate forwarded to Regional Commissioner of Customs: New York, March 23, 1981.

(R) Company: Mercury Stainless Corp.
Articles: Stainless steel sheets, polished and cut to specifications.
Merchandise: Stainless steel coils.
Factories: Glenview and Wheeling, IL.
Statement signed: December 12, 1980.
Basis of claim: Appearing in.
Rate issued by Regional Commissioner of Customs in accordance with section 22.4(o)(2): Chicago, December 24, 1980.
Revokes: T.D. 80–297–R.

(S) Company: National Leather Corp.
Articles: Pigment colored and surface textured leather.
Merchandise: Leather in the rough, partially finished or finished.
Factory: Johnstown, NY.
Statement signed: May 27, 1980.
Basis of claim: Appearing in.
Rate forwarded to Regional Commissioner of Customs: New York, March 23, 1981.

(T) Company: Ocean State Spring Co., Inc.
Articles: Steel starter rewind springs.
Merchandise: Flat wire spring steel.
Factory: Warwick, RI.
Statement signed: January 15, 1981.
Basis of claim: Appearing in.
Rate forwarded to Regional Commissioner of Customs: Boston, March 5, 1981.

(U) Company: RCA Corp.
Articles: Television picture tubes (kinescopes).
Merchandise: Electron gun assembly.
Factories: Scranton and Lancaster, PA; Marion, IN.
Statement signed: February 3, 1981.
Basis of claim: Appearing in.
Rate forwarded to Regional Commissioner of Customs: Baltimore, March 13, 1981.

(V) Company: Roselon Industries, Inc.
Articles: Crimped filament nylon and polyester yarn.
Merchandise: Raw filament nylon and polyester yarn.
Factories: Danville and Quakertown, PA; Crossville and Spencer, TN.
Statement signed: November 12, 1980.
Basis of claim: Appearing in.

346-392 O - 4

Rate forwarded to Regional Commissioner of Customs: New York, March 5, 1981.

(W) Company: Smith International, Inc.
Articles: Drill collars and heat treated steel bars.
Merchandise: Alloy steel bars.
Factory: Houston, TX.
Statement signed: January 17, 1981.
Basis of claim: Appearing in.
Rate forwarded to Regional Commissioner of Customs: Houston, March 11, 1981.
Revokes: T.D. 76-249-G.

(X) Company: Teepak Inc.
Articles: Finished fibrous sausage casings.
Merchandise: Semi-finished artificial fibrous sausage rollstock.
Factories: Danville, IL; Bethlehem, PA; North Kansas City, MO; La Mirada, CA; Winimac, IN; Atlanta, GA.
Statement signed: July 21, 1980.
Basis of claim: Used in.
Rate issued by Regional Commissioner of Customs in accordance with section 22.4(o)(2): Chicago, July 25, 1980.
Revokes: T.D. 80-200-U.

(Y) Company: Tenneco Chemicals, Inc.
Articles: Vinyl compounds.
Merchandise: Vinyl plasticizers; resins.
Factory: Burlington, NJ.
Statement signed: February 19, 1981.
Basis of claim: Used in.
Rate forwarded to Regional Commissioner of Customs: New York, March 20, 1981.

(Z) Company: Witco Chemical Corp.
Articles: Medium molecular weight sodium sulfonate, high molecular weight calcium sulfonate, and basic barium sulfonate.
Merchandise: High molecular weight sodium sulfonate.
Factories: Harvey, LA; Petrolia and Chester, PA.
Statement signed: January 13, 1981.
Basis of claim: Used in.
Rate forwarded to Regional Commissioner of Customs: New York, March 13, 1981.

(T.D. 81-124)

Suspension of the requirements of sections 10.38 and 10.39 of the Customs Regulations for merchandise temporarily imported under bond.

Notice is hereby given that the Assistant Commissioner of Customs (Commercial Operations), on April 3, 1981, suspended the requirements of sections 10.38 and 10.39 of the Customs Regulations.

Sections 10.38 and 10.39 of the Customs Regulations require Customs to examine any article temporarily imported under bond when that article is to be exported. They also require that the exportation be done under Customs supervision. With decreased numbers of personnel, those requirements are unrealistic. The Regulations are being amended to accomplish the ultimate objective, insuring exportation, by documentary evidence filed by the importer.

Until amendment of the Regulations is accomplished, an importer of a temporarily imported article may effect cancellation of the bond or carnet by filing evidence such as a copy of a bill of lading, a landing certificate, a vessel or vehicle manifest, a certificate of lading, or a certified notice of exportation which shows that the article was exported is acceptable for this purpose. A re-exportation voucher must be filed for cancellation of a carnet.

If the Customs officer who receives the evidence at the port where the temporary importation entry was filed is satisfied that the evidence truly documents the exportation, that officer may cancel the bond or carnet. If the Customs officer who receives the evidence is located at a port other than where the temporary importation entry was filed, that officer must send the evidence to the original port of entry for action in accordance with this instruction.

Until amendment of the sections are effective, at the importer's option, the existing procedures set forth in sections 10.38 and 10.39 of the Regulations also may be followed.

Dated: May 5, 1981.

MARILYN G. MORRISON,
Director, Carriers, Drawback and Bonds Division.

(T.D. 81-125)

Foreign Currencies—Variances From Quarterly Rate

The following rates of exchange are based upon rates certified to the Secretary of the Treasury by the Federal Reserve Bank of New York, pursuant to Section 522(C), Tariff Act of 1930, as amended (31 U.S.C. 372(c)), and reflect variances of 5 per centum or more

from the quarterly rate published in Treasury Decision 81–82 for the following countries. Therefore, as to entries covering merchandise exported on the dates listed, whenever it is necessary for Customs purposes to convert such currency into currency of the United States, conversion shall be at the following rates.

Spain peseta:	
April 20, 1981	$0.011173
April 21–24, 1981	Quarterly

(LIQ–03–01 O:C:E)

Dated: April 24, 1981.

KENNETH A. RICH,
Chief, Customs Information Exchange.

(T.D. 81–126)

Foreign Currencies—Daily Rates for Countries Not on Quarterly List

The Federal Reserve Bank of New York, pursuant to section 522(c), Tariff Act of 1930, as amended (31 USC 372 (c)), has certified buying rates for the dates and foreign currencies shown below. The rates of exchange, based on these buying rates, are published for the information and use of Customs officers and others concerned pursuant to Part 159, Subpart C, Customs Regulations (19 CFR 159, Subpart C).

Argentina peso:	
April 20–23, 1981	$0.000325
April 24, 1981	.000321
Brazil cruziero:	
April 20–23, 1981	$0.012522
April 24, 1981	.012293
Chile peso:	
April 20–24, 1981	$0.025667
People's Republic of China yuan:	
April 20–24, 1981	$0.595309
Colombia peso:	
April 20–23, 1981	$0.018979
April 24, 1981	.018921
Greece drachma:	
April 20, 1981	$0.018692
April 21, 1981	.018797
April 22, 1981	.018868
April 23–24, 1981	.018904

Hong Kong dollar:	
April 20, 1981	$0. 185443
April 21, 1981	. 185736
April 22, 1981	. 186254
April 23, 1981	. 186359
April 24, 1981	. 186254
Indonesia rupiah:	
April 20–22, 1981	$0. 001600
April 23, 1981	. 001653
April 24, 1981	. 001600
Iran rial:	
April 20–24, 1981	Not Available
Israel shekel:	
April 20–24, 1981	$0. 107991
Peru sol:	
April 20–24, 1981	$0. 002469
Philippines peso:	
April 20–24, 1981	$0. 130548
Singapore dollar:	
April 20, 1981	$0. 471698
April 21, 1981	. 470810
April 22, 1981	. 471476
April 23–24, 1981	. 471698
South Korea won:	
April 20–23, 1981	$0. 001478
April 24, 1981	. 001475
Thailand baht (tical):	
April 20–24, 1981	$0. 048193
Venezuela bolivar:	
April 20–24, 1981	$0. 232883

(LIQ–03–01 O:C:E)

Date: April 24, 1981.

KENNETH A. RICH,
Chief, Customs Information Exchange.

United States Court of International Trade

One Federal Plaza
New York, N.Y. 10007

Chief Judge

Edward D. Re

Judges

Paul P. Rao
Morgan Ford
Scovel Richardson
Frederick Landis
James L. Watson
Herbert N. Maletz
Bernard Newman
Nils A. Boe

Senior Judge

Samuel M. Rosenstein

Clerk

Joseph E. Lombardi

Decisions of the United States Court of International Trade

(Slip Op. 81–32)

MELAMINE CHEMICALS, INC., PLAINTIFF *v.* UNITED STATES, DEFENDANT, CHEMIE LINZ, A. G., DEFENDANT-INTERVENOR.

Court No. 80–6–00879

AND

MELAMINE CHEMICALS, INC., PLAINTIFF *v.* UNITED STATES, DEFENDANT, MONTEDISON S.p.A. AND MONTEDISON USA, INC., DEFENDANTS-INTERVENORS.

Court No. 80–6–00880

Memorandum Opinion and Order

[Motion for protective order granted as indicated.]

(Dated April 21, 1981)

Baker & McKenzie (*Bruce E. Clubb* on the motion) for the plaintiff.

Thomas E. Martin, Acting Assistant Attorney General; *David M. Cohen*, Director, Commercial Litigation Branch (*Francis J. Sailer* on the motion), for the defendant.

Siegel, Mandell & Davidson (*Herbert T. Posner* on the cross-motion) for Chemie Linz, A.G., defendant-intervenor; *Netter, Dowd & Alfieri* (*John B. Alfieri* on the motion) for Montedison S.p.A. and Montedison USA, Inc., defendants-intervenors.

LANDIS, Judge: These actions were instituted pursuant to 19 U.S.C. § 1516a(a)(2) seeking judicial review of a determination of no material injury or threat thereof published by the United States International Trade Commission on May 14, 1980 in antidumping investigation Nos. 731–TA–13 and 14, 1980 (final) of melamine in crystal form from Italy and Austria (45 Fed. Reg. 31830).

Plaintiff moves for an order granting access to confidential documents numbered one (1) through twenty-one (21) and twenty-three (23) through twenty-nine (29) on list No. 2 transmitted to this court in connection with the above dumping investigations. Defendant United States cross-moves for a protective order precluding disclosure of the questionnaires contained in the administrative record particularly documents numbered one (1) through eighteen (18) and twenty-nine (29) on list No. 2. Defendants-intervenors Montedison S.p.A. and Montedison USA, Inc. oppose plaintiff's motion as to document numbered seven (7) and so much of the document numbered twenty-eight (28) as pertains to defendants-intervenors. Defendant-intervenor Chemie Linz, A.G. cross-moves for a protective order denying disclosure or, alternatively, for an in-camera inspection as to documents numbered five (5), twenty (20), twenty-five (25) and twenty-six (26) on list No. 2.

Defendant United States does not object to the form of the proposed protective order submitted by plaintiff [1] nor does it argue that the terms therein will not adequately protect all parties in interest. Rather, the Government objects to the broad scope of the request and argues that such disclosure may have a chilling effect on its ability to obtain confidential responses to questionnaires and information from importers and industry in the future. It further

[1] This order is similar to the order promulgated in *Atlantic Sugar, Ltd. v. United States*, 85 Cust. Ct. 114, C.R.D. 80-10 (1980).

questions the relevancy of certain questionnaires received from importers.[3]

Accordingly, upon reading plaintiff's motion to examine confidential documents submitted to the court as part of the administrative record of the proceeding before the International Trade Commission, the opposition and cross-motion for a protective order by the defendant United States, the opposition by defendants-intervenors Montedison S.p.A. and Montedison USA, Inc., and cross-motion of defendant-intervenor Chemie Linz, A.G. and all other pleadings and papers on file, it is hereby

ORDERED that said plaintiff's motion and said defendant United States' cross-motion and said defendant-intervenor's cross-motion be, and the same hereby are granted subject to the terms and conditions set forth below; and

ORDERED that the confidential documents numbered three (3), sixteen (16), seventeen (17) and twenty-eight (28) on list No. 2, transmitted to the United States Court of International Trade in connection with the above captioned action, shall be available to counsel for plaintiff for examination and copying at the office of the Clerk of the Court or the office of the Secretary, International Trade Commission, during the thirty (30) days following entry of this Order, subject to the terms and conditions specified below;

1. All of the information not previously made publicly available contained in the confidential documents in list No. 2, "Confidential Documents transmitted to the United States Customs Court," shall be considered confidential.

2. Except as otherwise provided in this Order, counsel for plaintiff shall not disclose the confidential information to anyone other than their immediate office personnel actively assisting in this litigation.

3. Counsel for plaintiff and their immediate office personnel shall neither disclose nor use any of the confidential information for purposes other than this litigation (subject to continued safeguards to preserve confidentiality) any remand or appeal of this matter. Wherever used in this Order, the term "this litigation" shall be deemed to include remand or appeal resulting therefrom.

4. If in the opinion of plaintiff's counsel, it becomes necessary to consult with experts independent of the industry involved in evaluating the confidential information, counsel will not contact such experts without first notifying and conferring with counsel for defendant United States concerning the suitability of such experts.

---

[3] The Government does not object to disclosure of documents 19, 20, 21, 23 through 28 on list No. 2. Documents 1 through 15 except 3 are replies to questionnaires from importers. Documents 3, 16, 17, 18 and 20 are replies to questionnaires from domestic producers. Document 18 is plaintiff's own response to the confidential questionnaire. Document 20 is a confidential excerpt of document 18 released by the Commission under protective order to counsel for Dutch State Mines subsequently returned to the Commission.

If after seven days following notification of defendant's counsel, counsel for the respective parties cannot agree upon a suitable expert, plaintiff's counsel may submit the matter to the court for resolution. Such experts, once decided upon, shall agree not to disclose any of the confidential information to anyone other than to the counsel who consulted with them or that counsel's office personnel actively assisting in this litigation, and then for purposes of this litigation only; any experts so consulted shall first sign a statement submitting themselves to the jurisdiction of the Court of International Trade and such reasonable sanctions as the court may hold appropriate in the event of a breach of the conditions of this protective order by them.

5. In no event shall disclosure of confidential information be made to in-house counsel or other representatives, agents, or employees of plaintiff or the interested parties.

6. Counsel for plaintiff shall maintain a record of any and all copies of confidential information made, to whom they are provided and when they are returned. All such copies shall be clearly labelled as containing confidential information and that they are to be returned at the conclusion of this litigation.

7. Any documents, including briefs and memoranda, containing any of the confidential information, which are filed with the court in this case, shall be conspicuously marked as containing information which is not to be disclosed to the public, and arrangements shall be made with the Clerk of this Court to retain such documents under seal, permitting access only to the court, court personnel authorized by the court to have access, and counsel for the parties. Copies of all the foregoing documents, but with the confidential information deleted, shall be filed with the court at the same time that the documents containing the confidential information are filed.

8. Any briefs or memoranda containing confidential information shall be served upon the other parties in a wrapper conspicuously marked on the front "Confidential—to be opened only by (the name(s) of the attorneys handling the case)" and shall be accompanied by a separate copy from which the confidential information has been deleted.

9. Upon conclusion of this litigation or any appeal or remand of this matter, counsel for plaintiff and the interested parties shall (a) return all copies of the confidential documents obtained under this Order and the record required to be maintained under paragraph 6 above; and (b) destroy all other documents (including documents held by persons authorized under this Order to have access thereto) containing the confidential information.

10. Any reference to plaintiff or plaintiff's counsel herein shall include any other interested party who may subsequently be granted access to such documents under protective order.

Except for documents numbered three (3), sixteen (16), seventeen (17) and twenty-eight (28), all documents one (1) through twenty-nine (29) inclusive, on list No. 2, transmitted to the United States Court of International Trade in connection with the above-captioned actions shall not be available to anyone for discovery purposes at this time. Should any party upon examination of the disclosed documents or otherwise, believe they are entitled to review the non-disclosed documents they may, upon good cause shown, make application to this court for such appropriate relief as the court deems just and necessary.

(Slip Op. 81–33)

HERAEUS-AMERSIL, INC. (FORMERLY AMERSIL, INC.), PLAINTIFF *v.* UNITED STATES, DEFENDANT.

Court No. 81–3–00251

Cross Motions for Summary Judgment Motion To Dismiss

[Plaintiff's motion for summary judgment granted; defendant's cross motion denied.]

(Decided April 24, 1981)

Fitch, King and Caffentzis (*Richard C. King* and *James Caffentzis* at the hearing and on the briefs) for the plaintiff.

Thomas S. Martin, Acting Assistant Attorney General; *Joseph I. Liebman*, Attorney in Charge, International Trade Field Office, Commercial Litigation Branch (*Sidney N. Weiss* at the hearing and on the briefs), for the defendant.

FORD, Judge: Plaintiff has invoked the jurisdiction of the court under 28 U.S.C. 1581(i) (1) and (4) and 28 U.S.C. 1585 by filing a summons and complaint on March 5, 1981, together with a motion for an order to show cause why a preliminary injunction should not be granted. The order to show cause was granted on March 6, 1981 and the matter was set for hearing on March 12, 1981.

At the hearing two witnesses were called on behalf of plaintiff. Defendant moved to dismiss on the grounds the action fails to state a cause of action upon which relief could be granted. This motion was based upon the Anti-Injunction Act, 26 U.S.C. 7421(a) and the Declaratory Judgment Act, 28 U.S.C. 2201, both of which prohibit the issuance of relief when it involves the collection of a tax. Additionally, defendant contended plaintiff had not met its burden of proof for a preliminary injunction. At the conclusion of the hearing defendant moved, under Rule 65(a)(2) to consolidate the hearing

with a motion for summary judgment, pursuant to Rule 56(b) of the rules of this court, which provides for defending party to so move notwithstanding an answer to the complaint has not been filed. Plaintiff joined in the motion for summary judgment pursuant to Rule 56(a). The parties were granted additional time to file briefs on the question of summary judgment.

Plaintiff is a substantial importer of merchandise. On December 19, 1980 six entries covering merchandise previously imported were liquidated by the United States Customs Service reflecting increased duties of $73,583.75 determined to be due on liquidation. On January 23, 1981, the regional commissioner's office advised plaintiff by letter that this sum was due and payable upon receipt of the bill (liquidation). The letter further requested plaintiff or his representative to appear at the customhouse and bring payment or proof of payment. Plaintiff was also advised if payment were not made within ten working days from the date of the letter its privilege of delayed payment of estimated duties (ten days from the release of merchandise) would be denied and thereafter deposit of estimated duties would be required on entry. The affidavit of Remigio Ferrara, Chief, Revenue Branch, Accounting Division, in Washington, D.C., further stated such sums are due even if a protest were filed.

Counsel for plaintiff sought and was granted an extension of time to review the entry papers which were not available for review at that time. After review of the papers counsel for plaintiff determined that increased duties on the value of the merchandise were correct, but not on the classification. On February 13, 1981 plaintiff caused to be paid the sum of $61,333.17 representing the increased duties on the valuation of the merchandise covered by the six entries. On the same date, plaintiff protested the classification of the six entries. Jeffrey Margalit, Deputy Assistant Regional Commissioner, Financial Management Division, Region II, of the United States Customs Service, in his affidavit stated said sum was deposited "strictly for accounting reasons" and was applied to all entries except entry No. 413863, leaving a balance of $12,250.58 outstanding. On February 20, 1981, customs advised plaintiff its privilege of delayed payment of estimated duty was being suspended immediately since the importer was substantially delinquent in the payment of customs bills.

Defendant's motion for consolidation under Rule 65(a)(2) and for summary judgment under Rule 56, in which plaintiff joined, obviates the necessity of deciding plaintiff's motion for a preliminary injunction and defendant's motion to dismiss. Both parties agree there are no material facts in dispute and hence the matter is ripe for summary judgment.

Based upon the facts of record there is no dispute that plaintiff is indebted to the Customs Service in the sum of $12,250.58 as a result of the liquidation of six entries on December 19, 1980.

The issue presented to the court is the time when the increased duties determined to be due on liquidation must be paid to the Customs Service and whether the applicability of the "sanctions" imposed by the Customs Service requiring deposits of estimated duties on entry were proper under the provisions of 19 CFR 142.13(b) and 19 CFR 142.14.

The dispute as to the proper classification of the merchandise, for which a protest has been filed, is not before the court. However, the issue of the proper classification may be brought under 28 U.S.C. 1581(a) by the filing of a summons within 180 days from the denial of the protest (28 U.S.C. 2636(a)), the payment of duties (28 U.S.C. 2637(a)), and payment of a filing fee (28 U.S.C. 2633(a)).

The primary issue as indicated *supra* is the time the duties must be paid. Under the provisions of 28 U.S.C. 2637(a), an action contesting the denial of a protest may be commenced in this court "only if all liquidated duties, charges, or exactions have been paid at the time the action is commenced * * *." Suffice it to say no such action has been instituted nor has the protest filed been denied or affirmed as of the time of the hearing. The provisions of 28 U.S.C. 2637(d) cover all other civil actions and require exhaustion of administrative remedies where appropriate. Accordingly, plaintiff is properly before the court under 28 U.S.C. 1581(i). *Wear Me Apparel Corporation* v. *United States*, 1 CIT—, Slip Op. 81–22 (March 10, 1981); *Sanho Collections, Limited* v. *Robert E. Chasen, Commissioner of Customs, et al.*, 1 CIT—, Slip Op. 80–2 (November 14, 1980).

A review of the legislative history of prior statutory provisions is of assistance in placing the present statutory provision in perspective. Under the Tariff Act of 1922, Section 514 provided, in effect, that a liquidation was final unless the importer, consignee, or agent, within 60 days after liquidation, filed a protest and paid the full amount of duties, charges, and exactions ascertained to be due.

The latter portion of the above provision was transferred to Section 515 of the Tariff Act of 1930 and the language was changed to provide as follows:

> Upon the filing of such protest the collector shall within ninety days thereafter review his decision, and may modify the same in whole or in part and thereafter remit or refund any duties, charge, or exaction found to have been assessed or collected in excess, or pay any drawback found due, of which notice shall be given as in the case of the original liquidation, and against which protest may be filed within the same time and in the same manner and under the same conditions as against the original liquidation or

> decision. If the collector shall, upon such review, affirm his original decision, or if a protest shall be filed against his modification of any decision, and, in the case of merchandise entered for consumption, if all duties and charges shall be paid, then the collector shall forthwith transmit the entry and the accompanying papers, and all the exhibits connected therewith, to the United States Customs Court for due assignment and determination, as provided by law. Such determination shall be final and conclusive upon all persons, and the papers transmitted shall be returned, with the decision and judgment order thereon, to the collector, who shall take action accordingly, except in cases in which an appeal shall be filed in the United States Court of Customs and Patent Appeals within the time and in the manner provided by law.

The revision of section 515, *supra*, and the intent of Congress was expressed in House of Representatives Report No. 7 to Accompany H.R. 2667 at page 179, as follows:

> The language of the present law requires the payment of the full amount of duties, charges, and exactions ascertained to be due, upon the filing of a protest with the collector, *Your committee believes that payment should not be required unless and until the protest goes to the Board of General Appraisers, and the law has been amended accordingly.* The collector has also been given authority to remit the duty if it has not been paid. *It would seem that if he may, as he is authorized to do under existing law, review his own action and reliquidate an entry and refund the excess duty paid, he should be given equal authority to review his action and remit the duty if not paid.* (Emphasis added.)

It is clear from the language utilized above that payment was not required unless and until the protest was forwarded to the Board of General Appraisers (subsequently the United States Customs Court). It is also to be noted that specific authority was given to Customs to *remit* duties which had not been paid.

A further substantive change of law was contained in the Customs Courts Act of 1970, Pub. L. 91-271. Under this act automatic referral of protests to this court was eliminated as well as the separate appraisement and classification procedures. The latter functions were combined and both were the subject of a single protest. Prior procedures required a notice of appraisement to be issued upon appraisement. An importer if dissatisfied could file an appeal for reappraisement and have the issue of appraisement decided by a single judge of the Customs Court sitting in reappraisement. If either side were dissatisfied an application for review could be filed and decided by a three-judge bench. An appeal could then be taken to the Court of Customs and Patent Appeals and finally on a writ of certiorari to the Supreme Court. During this time, the increased duties resulting from appraisement were not required to be paid, since liquidation,

which is the finalization of the entry process, could not be accomplished until the value issue was determined.

The elimination of automatic referral of protests was the result of the amendment of 28 U.S.C. 1582 by the 1970 act which granted jurisdiction to the Customs Court in those actions in which all liquidated duties, charges or exactions had been paid at the time the action is filed. The 1970 act also amended 28 U.S.C. 2631 and granted 180 days after the denial of the protest within which to initiate an action.

Under section 515(a) (19 U.S.C. 1515(a)) of the 1970 act, the Customs Service was granted a period of two years to review the protest unless accelerated disposition was requested. The 1970 act for the first time also permitted the Customs Service to review its appraisement, and enlarged the time period for an importer to file a protest from 60 days to 90 days. If the protest were allowed "* * * any duties, charge or exaction found to have been *assessed or collected in excess shall be remitted or refunded* * * *." (Emphasis supplied.) It is noted the above italicized language, although not in the same sequence as in the 1930 act was continued in the *1970* act.

Reference to the legislative history of the 1970 act, cited by defendant in its "Second Supplemental Brief," regarding the concern of various attorneys who appeared at the hearing about payment of duties related only to reappraisement matters which, as indicated *supra*, were not required under prior acts. A review of the legislative history cited by defendant, and an independent review of such history by the court, fails to disclose any Congressional intent to change the time period for the payment of duties ascertained to be due on liquidation as prescribed by section 505(b) as amended by the 1970 act. The language of section 505 as originally enacted by the Tariff Act of 1930, insofar as collection of duties is concerned, utilizes basically the same language of said section 505(b) as amended, *supra*, *i.e.*, "* * * collect any increased or additional duties due or refund any excess of duties deposited as determined on liquidation or reliquidation." (1970).

The utilization of the language *remitted* in section 515 of the 1970 act, coupled with the express intent of Congress in first utilizing the term *remit* in the 1930 tariff act, makes clear that the payment of customs duties was not required on liquidation. Congress is presumed not to have used superfluous words in a statute. *Ameliotex, Inc.* v. *United States*, 65 CCPA 22, C.A.D. 1200, 565 F.2d 674 (1977). Hence the reenactment of section 515 granting the Customs Service the authority to have excess duties remitted indicates the continuing intent of Congress regarding instances where increased duties have not been paid.

best copy available

As indicated, *supra*, the 1930 act required Customs to transmit forthwith the entry and accompanying papers to the court "if all duties and charges shall be paid." The 1970 act (28 U.S.C. 1582(c)(2)) provides the court shall not have jurisdiction unless "all liquidated duties, charges or exactions have been paid at the time the action is filed." This comports with the 1930 provision and the court is of the opinion that any liquidated duties, charges or exactions are not due and payable at liquidation, but rather at the time of the filing of the action or at the expiration of the statute of limitations if no action is filed.

The court notes 4 CFR 102.2 requires payment within 30 days from the date of notification. This regulation is not controlling herein since a statutory provision prevails over a regulation. The present procedure of granting 10 days after the 30-day period requiring payment, notwithstanding the fact a protest has been filed, is contrary to law.

The secondary issue concerns the placing of an importer on a "sanction" list pursuant to Customs Regulations 19 CFR 142.13(b) and 19 CFR 142.14. These sections require an importer to file an entry summary together with payment of estimated duties at the time of entry when an "importer is substantially or habitually delinquent in the payment of Customs bills." It is apparent by the holding in the primary issue, that such duties are not now due and owing and the importer is not in default. Hence the application of this regulation is improper and should not be utilized insofar as any sums not paid when a protest has been filed. Plaintiff's cross-motion for summary judgment is, therefore, granted and defendant's motion for summary judgment is denied.

In view of the foregoing decision on the merits, plaintiff's motion for preliminary injunction is denied and defendant's motion to dismiss is denied.

Judgment will be entered accordingly.

NOTE TO READERS

Slip Op. 81–38, to be published in the next edition, stayed the decisions and judgement in slip op. 81–33 pending resolution of any and all appeals by the defendant and further ordered that for the life of the stay the Customs Service "May continue to collect duties, fees, charges, penalties, and exactions in accordance with the Regulations promulgated by the Secretary of the Treasury * * *"

(Slip Op. 81–34)

ASG INDUSTRIES, INC., ET AL., PLAINTIFFS *v.* UNITED STATES, DEFENDANT.

Court No. 76–3–00667

[On remand from the Court of Customs and Patent Appeals, C.A. 79–15, C.A.D. 1237.]

Memorandum Accompanying Order

(Dated April 24, 1981)

FORD, J: This action is before the court pursuant to a remand issued in *ASG Industries, Inc., et al.* v. *United States*, 67 CCPA —, C.A.D. 1237 (1979), 610 F. 2d 770 (1979), rehearing denied (1980). Defendant has moved to dismiss the action with a judgment ordering the administrative authority to ascertain and determine or estimate the net amount of bounty or grants bestowed upon Vereinigte Glaswerke GMBH and Flachglas/Delog/Detal and levying countervailing duties in such amounts on the production of such manufacturers.

Plaintiff has opposed this motion on the ground that the granting of such motion would not be in compliance with the remand decision, C.A.D. 1237 and moved alternatively to have the matter remanded to the Secretary of Commerce, after giving plaintiff an opportunity to be heard, to ascertain the net amount of bounties or grants and have such information submitted to the court within 120 days for the court to make its determination or to have a hearing before the court on the amount of the net bounties or grants.

Defendant subsequently stated in its memorandum that it did not intend to present evidence of offsets and that the gross bounties or grants represent the net bounties or grants. At oral argument held on March 18, 1981, the basic difference between the parties was the quantification methodology or the formula to be used in ascertaining the amount of the net bounties or grants.

Prior to the enactment of the Trade Act of 1974, American Manufacturers could not challenge negative countervailing duty determinations. *United States* v. *Hammond Lead Products*, 58 CCPA 129, C.A.D. 1017, 440 F. 2d 1024, *cert. denied*, 404 U.S. 1005 (1971). The addition of subsection (d) to 516 of the Tariff Act of 1930 granted American Manufacturers the right to litigate the issue that no countervailable bounty or grant was conferred. The language of section 516(d) does not confer upon this court authority to determine the net *amount* of any bounty or grant. The courts have held the amount of countervailing duty is not subject to judicial review, but is rather within the

purview of the Secretary of Treasury (presently the Secretary of Commerce). *Franklin Sugar Refining Co.* v. *United States*, 1 Ct. Cust. Appls. 242, T.D. 31276 (1911).

I do not consider the remand for a trial *de novo* as set forth in C.A.D. 1237 as a directive to determine the *amount* of the countervailing duty. In my opinion the remand was merely for the purpose of ascertaining the offsets. This is apparent from the following language of said opinion:

> One, it is established that a foreign manufacturer is receiving payments *such as those here involved* (*not* "every payment," as the dissenting opinion imagines) from its government, a countervailing duty *must*, absent a waiver by the Secretary, be imposed unless, in considering all circumstances surrounding the payment, certain deductions can be established resulting in no net benefit to that manufacturer. These deductions must be established by facts [16]—not by mere allegations of the foreign government or of the enterprises receiving the bounty or grant. Needless to say, without an adequate factual record, neither this court nor the Customs Court can perform a meaningful judicial review of countervailing duty determinations.

[16] If the Treasury Department cannot, with its expertise, establish the necessary facts, a challenge may be brought later by the importer. Because the importer is in a better position to obtain these facts from the foreign manufacturer, once a prima facie case has been established by evidence that payments *such as those here involved* are being made, the domestic manufacturer should not (contrary to the dissenting opinion) have the burden of obtaining evidence of deductions necessary to negate its own prima facie case. Also, we note that under 19 U.S.C. 1303(a)(5), the Secretary is permitted to *estimate* the net bounty (*i.e.*, estimate the necessary deductions), and his expertise will play a part in this estimate as long as there is a factual basis to support it.

In view of the foregoing, the court is of the opinion that since the parties agree there are no offsets, the matter should be remanded to the Secretary of Commerce for the purpose of ascertaining the amount of countervailing duty due and directing the appropriate Customs Officers throughout the United States to assess such duties.

(Order follows)

ASG INDUSTRIES, INC., ET AL., PLAINTIFFS *v.* UNITED STATES, DEFENDANT.

Court No. 76–3–00667

[On remand from the Court of Customs and Patent Appeals, C.A. 79–15, C.A.D. 1237]

Order

(Dated April 24, 1981)

FORD, Judge.

Upon reading and filing defendant's motion to dismiss this action with a judgmentorde ring the administering authority to ascertain

and determine or estimate the net amount of the bounty or grants bestowed upon German manufacturers of float glass and levying countervailing duties in such amounts on the production of such manufacturers, and upon filing and reading plaintiffs' reply and all other papers filed in this case, it is hereby

ORDERED, ADJUDGED, AND DECREED that defendant's motion is hereby granted, and it is further

ORDERED, ADJUDGED, AND DECREED that the Secretary of Commerce or his delegate (1) ascertain and determine or estimate the net amount of the bounties or grants found by this Court in C.D. 4782 to have been paid or bestowed upon the manufacture or production by Vereinigte Glaswerke GMBH and Flatglas/Delog/Detal of float glass in the Federal Republic of Germany which were held by the Court of Customs and Patent Appeals in C.A.D. 1237 to be bounties or grants within the meaning of 19 U.S.C. 1303 without deducting any offsets and (2) direct the appropriate Customs officers throughout the United States to assess countervailing duties in the net amount equal to said bounties or grants, entered or withdrawn from warehouse for consumption on or after the date of suspension of liquidation, December 19, 1979.

Decisions of the United States Court of International Trade

Abstracts

Abstracted Protest Decisions

DEPARTMENT OF THE TREASURY, *April 27, 1981.*

The following abstracts of decisions of the U.S. Court of International Trade at New York are published for the information and guidance of officers of the customs and others concerned. Although the decis ons are not of sufficient general interest to print in full, the summary herein given will be of assistance to customs officials in easily locating cases and tracing important facts.

WILLIAM T. ARCHEY,
Acting Commissioner of Customs.

DECISION NUMBER	JUDGE & DATE OF DECISION	PLAINTIFF	COURT NO.	ASSESSED	HELD	BASIS	PORT OF ENTRY AND MERCHANDISE
				Par. or Item No. and Rate	Par. or Item No. and Rate		
P81/52	Richardson, J. April 22, 1981	Sortex Co.of North America, Inc.	76-4-00946	Item 712.49 12%, 11.5%, 11%, 10.5% or 10%	Item 666.25 11.5%, 10%, 9%, 8%, 6.5%, or 5.5%	Sortex Company of North America, Inc. v. U.S. (C.D. 4746, aff'd C.A.D. 1221)	Detroit Electronic color sorting machines and parts thereof
P81/53	Richardson, J. April 22, 1981	Sortex Co. of North America, Inc.	76-8-01900	Item 712.49 10%	Item 666.25 5.5%	Sortex Company of North America, Inc. v. U.S. (C.D. 4746, aff'd C.A.D. 1221)	Detroit Electronic color sorting machines and parts thereof
P81/54	Richardson, J. April 22, 1981	Sortex Co. of North America, Inc.	76-11-02416	Item 712.49 10%	Item 666.25 5.5%	Sortex Company of North America, Inc. v. U.S. (C.D. 4746, aff'd C.A.D. 1221)	Boston Electronic color sorting machines and parts thereof
P81/55	Watson, J. April 22, 1981	Candoro Marble Company	67/67516, etc.	Item 515.24 21% or 16.5%	Item 515.21 10.5¢ or 8¢ per cu. ft.	Colonna & Co., Inc. v. U.S. (C.D. 4841)	New Orleans Rough quarried travertine
P81/56	Newman, J. April 22, 1981	A. N. Deringer, Inc., a/c Uniroyal, Inc.	78-1-00186, etc.	Item 657.20 9.5%	Item 772.65 4%	Uniroyal, Inc., c/o A. N. Deringer, Inc. v. U.S. (Abs. P80/59)	Champlain-Rouses Point (Ogdensburg) Rubber hose, pipe or tubing with attached fittings
P81/57	Newman, J. April 22, 1981	A. N. Deringer, Inc., a/c Uniroyal, Inc.	78-8-01405	Item 657.20 or 657.40 9.5%	Item 772.65 4%	Uniroyal, Inc., c/o A. N. Deringer, Inc. v. U.S. (Abs. P80/59)	Champlain-Rouses Point (Ogdensburg) Rubber hose, pipe or tubing with attached fittings

Decisions of the United States Court of International Trade

Abstracts

Abstracted Reappraisement Decisions

DECISION NUMBER	JUDGE & DATE OF DECISION	PLAINTIFF	COURT NO.	BASIS OF VALUATION	HELD VALUE	BASIS	PORT OF ENTRY AND MERCHANDISE
R81/131	Re, C.J. April 21, 1981	Bus and Truck Supply Co.	73-3-00712	Export value	Appraised values, less 10% (excluding from 10% deduction the value of any Michelin tires included in appraised values), less value of components of U.S. origin allowed on liquidation	Agreed statement of facts	New Orleans Inter-city passenger buses
R81/132	Re, C.J. April 21, 1981	Conti Rubber Products Inc.	74-12-03418	Foreign value	Appropriate claimed unit values (all in Deutsche mark) listed on schedule attached to decision and judgment	Agreed statement of facts	Savannah Various automotive tires

DECISION NUMBER	JUDGE & DATE OF DECISION	PLAINTIFF	COURT NO.	BASIS OF VALUATION	HELD VALUE	BASIS	PORT OF ENTRY AND MERCHANDISE
R81/133	Re, C.J. April 21, 1981	Conti Rubber Products Inc.	75-4-00859	Foreign value	Appropriate claimed unit values (all in Deutsche mark) listed on schedule attached to decision and judgment	Agreed statement of facts	Chicago Various automotive tires
R81/134	Re, C.J. April 21, 1981	Conti Rubber Products Inc.	76-7-01605	Foreign value	Appropriate claimed unit values (all in Deutsche mark) listed on schedule attached to decision and judgment	Agreed statement of facts	New York Various automotive tires
R81/135	Re, C.J. April 21, 1981	Ditbro Pearl Co.	73-4-00963	Export value	Appraised values shown on entry papers less additions included to reflect currency revaluation	C.B.S. Imports Corp. v. U.S. (C.D. 4739)	New York Merchandise covered by entries listed on schedule attached to decision and judgment
R81/136	Re, C.J. April 21, 1981	International Hardware Imports, Ltd.	75-12-03172	Export value	Appraised values shown on entry papers less additions included to reflect currency revaluation	C.B.S. Imports Corp. v. U.S. (C.D. 4739)	New York Merchandise covered by entries listed on schedule attached to decision and judgment

R81/137	Re, C.J April 21, 1981	Mitsubishi International Corp.	74-3-00709	Export value	Appraised values shown on entry papers less additions included to reflect currency revaluation	C.B.S. Imports Corp. v. U.S. (C.D. 4739)	New York Merchandise covered by entries listed on schedule attached to decision and judgment
R81/138	Ford, J April 21, 1981	Olem Shoe Corp.	79-1-00182	Export value	Entered values	Judgment on the pleadings	Miami Footwear
R81/139	Re, C.J. April 22, 1981	Walker & Zanger, Inc.	74-4-00954, etc.	Export value	Appraised values shown on entry papers less additions included to reflect currency revaluation	C.B.S. Imports Corp. v. U.S. (C.D. 4739)	New York Merchandise covered by entries listed on schedule attached to decision and judgment
R81/140	Watson, J. April 22, 1981	First Chemical Products, Inc., et al.	72-8-01870, etc.	American selling price	Appraised value if merchandise was exported in 1969; $8.50 per kilogram, net, packed, if exported in 1970; or $8.62 per kilogram, net, packed, if exported 1/1/71-6/30/71	Agreed statement of facts	New York Sulfamethazine U.S.P. grade
R81/141	Ford, J. April 24, 1981	Micro-Mo Electronics, Inc.	78-7-01301	Export value	Unit invoice value from commercial invoices related to involved entries	Agreed statement of facts	Cleveland "Micro-motors"

Appeal to U.S. Court of Customs and Patent Appeals

Appeal 81–14.—Hiranport Co., an Oregon corporation *v.* United States Department of Treasury, acting by and through the United States Customs Service—METAL ROLLER CHAIN, OTHER THAN USED FOR BICYCLES—ANTIDUMPING ACT—DUMPING DUTIES—TSUS—Appeal from order denying plaintiff's motion for rehearing.

In the years 1973–1975, plaintiff-appellant was engaged in importing and selling motorcycle parts manufactured in Japan. Among the merchandise imported were roller chains which were manufactured in Tokyo by TK Products Company, Ltd., and exported to the United States by MC International, Inc., a foreign corporation located in Osaka. Pursuant to Section 201(a) of the Antidumping Act, the Secretary of the Treasury and the United States Tariff Commission determined that the Japanese roller chains (other than bicycle) were being sold in the United States for less than their fair market value. On April 6, 1973, the Secretary of the Treasury published a notice of such determinations (Treasury Decision 73–100). In conjunction with the Secretary of the Treasury's finding of dumping for the Japanese roller chains, the United States Customs Service ascertained, estimated, and appraised a foreign market value, a purchase price, and an exporter's sales price on the roller chains in order to determine the extent of the dumping and the amount of the dumping duties to be assessed. This information was consolidated and issued to the District Office of the United States Customs Service as a single document. The document was titled "Roller Chain Master Dumping List, CIE–N–66/72 (Supplement #103), dated December 27, 1976 (Exporter-MC International)." In compliance with the Secretary of the Treasury's finding of dumping, together with the provisions of Section 202(a) of the Antidumping Act, the United States District Director of Customs assessed dumping duties totaling $18,198.25 on plaintiff-appellant's importation of six shipments of Japanese roller chains.

Plaintiff-appellant filed a protest on November 10, 1977, in Portland, Oregon, under Section 514 of the Tariff Act of 1930, as amended, and Section 174.11 of the United States Customs Regulations, against

the assessment of the dumping duties, *supra*. Plaintift-appellant also filed an Application for Further Review of Protest in Portland, Oregon, under the provisions of Section 515 of the Tariff Act (19 U.S.C. Subsection 1515) and Section 174.24(b) of the United States Customs Regulations. On February 15, 1978, plaintiff-appellant mailed a request for an accelerated disposition of its pending protest and its pending Application for Further Review of Protest in compliance with Section 514 of the Tariff Act (19 U.S.C., Subsection 1514) and Section 174.22 of the United States Customs Regulations. Following the expiration of a 30-day period from the date of mailing of plaintiff-appellant's request, during which period the District Director failed to allow or deny the protest, the protest was deemed denied by operation of law, under the provisions of Section 515(b) of the Tariff Act (19 U.S.C., Subsection 1515(b)) and Section 174.22(d) of the United States Customs Regulations.

Plaintiff-appellant claims that none of the provisions of the Antidumping Act, the Tariff Act, the Customs Regulations, or Treasury Decision 73–100 apply to its shipments in that no dumping of roller chain has ever in fact occurred in the United States generally or with respect to its import shipments in particular; that the purchase price of the roller chain is not less than its fair market value as determined under 19 U.S.C., Subsections 161(a), 162, and 164, and, therefore, there can be no legal foundation for any assessment against plaintiff-appellant for antidumping duties; that the United States Customs Service Appraisement Reports on the six importations are erroneous in certain respects; that the United States Customs Service's unit foreign market value used in computing the dumping duties is also erroneous; that the actions of the Tariff Commission and the Secretary of the Treasury, or their delegates, were outside their statutory authority and void because their acts discriminated against plaintiff-appellant, in violation of the Constitution of the United States, Article I, Section 8, because similarly situated importers of merchandise identical to roller chain were not assessed dumping duties by the United States Customs Service during the years at issue.

Plaintiff-appellant brought an action in the United States Customs Court. The Court dismissed the case for lack of prosecution. Plaintiff-appellant was thereafter granted a rehearing. The case was again dismissed by the Court for lack of prosecution. Included in its motion in opposition to plaintiff-appellant's motion for an extension of time to move the case toward a final disposition was defendant-appellee's cross-motion to dismiss. The Court denied plaintiff-appellant's motion, and granted the motion to defendant-appellee to dismiss. Plaintiff-appellant filed a motion to reinstate its case and again to extend the time to move toward final disposition. Defendant-appellee filed a

memorandum in opposition. The Court entered an order denying plaintiff-appellant's motion to reinstate and to extend the time to move the case toward final disposition.

Plaintiff-appellant appeals the decision of the United States Court of International Trade (formerly the United States Customs Court) for denying its motion for an extension of time, granting defendant-appellee's cross-motion to dismiss, and denying plaintiff-appellee's motion for rehearing. In support of its appeal, plaintiff-appellant relies upon Rule 3.1 of the Rules of the United States Court of Customs and Patent Appeals.

International Trade Commission Notices

Investigations by the United States International Trade Commission

DEPARTMENT OF THE TREASURY, MAY 6, 1981

The appended notices relating to investigations by the United States International Trade Commission are published for the Information of Customs Officers and others concerned.

R. E. CHASEN,
Commissioner of Customs.

Notice of Investigation

[332–125]

Analysis of Recent Trends in U.S. Barter and Countertrade

AGENCY: United States International Trade Commission.

ACTION: In accordance with the provisions of section 332(b) of the Tariff Act of 1930 (19 U.S.C. 1332(b)), the Commission has instituted investigation No. 332–125 for the purpose of gathering and presenting information on U.S. barter/countertrade and its significance in the world market. This study will document and analyze selected data on the volume and composition of U.S. trade involving barter/countertrade (B/CT) with non-market economy countries, developing nations, and industrialized countries. The study will examine the more important and representative instances of B/CT and focus on the current and future impact of B/CT arrangements on the U.S. industry and employment.

EFFECTIVE DATE: April 21, 1981.

FOR FURTHER INFORMATION CONTACT: Mr. Ronald J. DeMarines, Machinery and Equipment Division, U.S. International Trade Commission, Washington, D.C. 20436 (telephone 202–523–0259).

WRITTEN SUBMISSIONS: There is no public hearing scheduled for this study; however, written submissions from interested parties

are invited. Commercial or financial information which a party desires the Commission to treat as confidential must be submitted on separate sheets of paper, each clearly marked "Confidential Business Information" at the top. All submissions requesting confidential treatment must conform with the requirements of section 201.6 of the Commission's Rules of Practice and Procedure (19 CFR 201.6). All written submissions, except for confidential business information, will be made available for inspection by interested persons. To be assured of consideration by the Commission in this study, written statements should be submitted at the earliest practicable date, but no later than September 9, 1981. All submissions should be addressed to the Secretary of the Commission at the Commission's office in Washington, D.C.

By order of the Commission.

Issued: April 23, 1981.

KENNETH R. MASON,
Secretary.

In the Matter of CERTAIN MULTICELLULAR PLASTIC FILM	Investigation No. 337–TA–54

Notice of Advisory Opinion

AGENCY: U.S. International Trade Commission.

ACTION: Notice is hereby given that the Commission has granted Canadian Tarpoly Co.'s request for an advisory opinion interpreting the exclusion order issued in the above-captioned investigation.

AUTHORITY: The authority for this action is contained in section 337 of the Tariff Act of 1930 (19 U.S.C. § 1337) and section 211.54(b) of the Commission's Rules of Practice and Procedure (19 CFR 211.54(b)).

SUPPLEMENTARY INFORMATION: On December 19, 1980, the Commission received a petition filed on behalf of Canadian Tarpoly Co., a Canadian manufacturer of multicellular plastic film. The petition requested an advisory opinion on the scope of the exclusion order issued by the Commission on June 29, 1979, at the conclusion of the above-captioned investigation. Canadian Tarpoly proposes to move the manufacture of the plastic film it uses in the construction of its pool covers to the United States, export the plastic film to Canada for assembly of the pool covers, and then reship covers to the United States. Canadian Tarpoly has asked the Commission to issue an opinion as to whether this procedure would violate the

Commission's exclusion order. The Commission has issued an advisory opinion that the procedure in question would not violate its order.

FOR FURTHER INFORMATION CONTACT: Christine Bliss, Esq., Office of the General Counsel, U.S. International Trade Commission, telephone 202–523–0375.

By order of the Commission.

Issued: April 28, 1981.

KENNETH R. MASON,
Secretary.

In the Matter of CERTAIN FOOD SLICERS AND COMPONENTS THEREOF	Investigation No. 337–TA–76

Commission Schedule for Filing Written Submissions on the Presiding Officer's Recommendation; on Relief, Bonding, and the Public Interest; and for Requesting a Public Hearing

AGENCY: U.S. International Trade Commission.

ACTION: Request for written submissions regarding the presiding officer's recommendation, relief, bonding, and the public interest in investigation No. 337–TA–76, Certain Food Slicers and Components Thereof.

SUMMARY: Notice is hereby given that based on a motion for summary determination (Motion 76–16) by complainant Prodyne Enterprises, Inc., the presiding officer has issued a recommended determination that there is a violation of section 337 of the Tariff Act of 1930 (19 U.S.C. 1337), in the importation into the United States and sale of certain food slicers and components thereof that are the subject of the Commission's investigation. Accordingly, Motion 76–16, the papers in support thereof, and the recommended determination have been certified to the Commission for review and a Commission determination. No public hearing is presently scheduled in this matter.

Interested persons may obtain copies of the nonconfidential version of the presiding officer's recommendation (and all other public documents on the record of the investigation) by contacting the Office of the Secretary, U.S. International Trade Commission, 701 E Street NW., Room 161, Washington, D.C. 20436, telephone 202–523–0161.

Although no public hearing before the Commission is scheduled, requests for such a hearing will be considered by the Commission. If a public hearing is requested and the Commission grants that request, the hearing will be held on Thursday, May 28, 1981. SUP-

PLEMENTARY INFORMATION: *Written submissions on patent validity, infringement, and injury.* The Commission hereby requests that the parties submit briefs on the following issues: (1) the validity of U.S. Letters Patent 3,766,817, particularly as to the questions of anticipation and obviousness; (2) the infringement of claim 6 and/or claim 7 of U.S. Letters Patent 3,766,817 by the accused Mishan slicer, particularly as to the issue of the "cutting element having one end looped around the portion of said one leg" in view of the doctrine of file wrapper estoppel; and (3) the question of whether the alleged unfair act or unfair method of competition has an effect or tendency to destroy or substantially injure an industry efficiently and economically operated in the United States, particularly as to the issues of whether the unfair act is the infringement of U.S. Letters Patent 3,766,817 by respondent Mishan, by other respondents who have been terminated on the basis of licensing and/or settlement agreements, by other persons unknown or by all or some of the above, and having defined the unfair act, whether the uncontroverted facts are sufficient as a matter of law to establish an effect or tendency to destroy or substantially injure an efficiently and economically operated U.S. industry. Such briefs must be filed no later than Friday, May 22, 1981.

Written submissions on relief, bonding, and the public interest. If the Commission finds that a violation of section 337 has occurred, it may issue (1) an order which could result in the exclusion of the subject articles from entry into the United States and/or (2) an order which could result in one or more respondents being required to cease and desist from engaging in unfair methods of competition or unfair acts in the importation and sale of such articles. Accordingly, the Commission is interested in receiving written submissions which address the form of relief, if any, which should be ordered.

If the Commission finds that a violation of section 337 has occurred and orders some form of relief, the President has 60 days to approve or disapprove the Commission's action. During this period, the subject articles would be entitled to enter the United States under a bond in an amount determined by the Commission and prescribed by the Secretary of the Treasury. The Commission is therefore interested in receiving written submissions concerning the amount of the bond, if any, which should be imposed.

If the Commission concludes that a violation of section 337 has occurred and contemplates some form of relief, it must consider the effect of that relief upon the public interest. The factors which the Commission will consider include the effect that an exclusion order and/or a cease and desist order would have upon (1) the public health and welfare, (2) competitive conditions in the U.S. economy,

(3) the U.S. production of articles which are like or directly competitive with those which are the subject of the investigation and (4) U.S. consumers. The Commission is therefore interested in receiving written submissions concerning whether the aforementioned public interest factors preclude relief in this investigation.

All written submissions on relief, bonding and the public interest must be filed not later than the close of business on Friday, May 22, 1981.

Request for hearing. Written requests for a hearing before the Commission must be received by the Office of the Secretary no later than Friday, May 15, 1981. Any request for a hearing must state in detail the reason for such request, including the reasons why the issues in question cannot be addressed adequately by means of written submissions.

ADDITIONAL INFORMATION: The original copy and 11 true copies of all written submissions must be filed with the Office of the Secretary not later than May 22, 1981. Any person desiring to discuss confidential information, or to submit a document (or a portion thereof) to the Commission in confidence, must request in camera treatment unless the information has already been granted such treatment by the presiding officer. All such requests should be directed to the Secretary to the Commission and must include a full statement of the reasons why the Commission should grant such treatment. Documents or arguments containing confidential information approved by the Commission for in camera treatment will be treated accordingly. All nonconfidential written submissions will be available for public inspection at the Secretary's Office.

FOR FURTHER INFORMATION CONTACT: Warren H. Maruyama, Esq., Office of the General Counsel, U.S. International Trade Commission, telephone 202–523–0143; Scott M. Daniels, Esq., Office of the General Counsel, U.S. International Trade Commission, telephone 202–523–0480.

By order of the Commission.

Issued: April 28, 1981.

KENNETH R. MASON,
Secretary.

Investigation No. 731–TA–30 (Final)

Unrefined Montan Wax From East Germany

AGENCY: U.S. International Trade Commission.

ACTION: Notice of postponement of prehearing conference and hearing.

SUMMARY: The U.S. International Trade Commission amounces the postponement of the prehearing conference and the hearing on unrefined montan wax.

FOR FURTHER INFORMATION CONTACT: Judith Case, U.S. International Trade Commission, 202–523–0339.

SUPPLEMENTARY INFORMATION: The prehearing conference which had been scheduled for May 21, 1981, and the hearing in this investigation which had been scheduled for June 8, 1981, have been postoned until further notice. The Commission's prehearing conference and hearing have been postponed as a result of the postponement by the United States Department of Commerce, for up to 60 days, of its final determination, as to the question of whether unrefined montan wax from East Germany is being, or is likely to be sold in the United States at less than fair value. The prehearing conference and the hearing will be rescheduled at such time as Commerce makes its final determination, and a notice will be published with these dates, at that time.

The Commission will prepare and place on the record by May 20, 1981, a staff report containing preliminary findings of fact, the public portion of which will be made available to interested persons. Commission rule 207.22, requiring the submission of prehearing statements by parties within 15 days of release of the staff report is waived for purposes of this investigation to allow parties time to address all relevant issues which may develop. The date for submission of the prehearing statements will be announced in the Commission notice rescheduling the prehearing conference and the hearing.

By order of the Commission.

Issued: April 28, 1981.

KENNETH R. MASON,
Secretary.

U.S. Customs Service

Index

Treasury Decisions:

- Carrier Bond ---- 81–121
- Cotton Textile Products—Restriction on Entry/Singapore ---- 81–119
- Cotton, Wool and Manmade Fiber Textile Products—Restriction on Entry/Mexico ---- 81–118
- Foreign Currencies:
  - Variance from quarterly rate; April 20–24, 1981 ---- 81–125
  - Daily certified rate; April 20–24, 1981 ---- 81–126
- Reimbursable Services—Excess Cost of Preclearance Operations ---- 81–120
- Suspension of Sections 10.38 and 10.39 of Customs Regulations ---- 81–124
- Synopses of drawback decisions ---- 81–122
  - Radios, speakers and antennas ---- 81–122–A
  - Steel bars, steel balls, metal retainers ---- 81–122–B
  - Plywood ---- 81–122–C
  - Steel plates ---- 81–122–D
  - Hydrascreen subassemblies ---- 81–122–E
  - Carbon, activated ---- 81–122–F
  - Paranox 105 ---- 81–122–G
  - Clam nectar, chowder, and oyster stew ---- 81–122–H
  - Film, sensitized graphic arts and industrial ---- 81–122–I
  - Steel wire rope ---- 81–122–J and 81–122–K
  - Polysar butyl rubber ---- 81–122–L
  - Ethyl monochloroacetate ---- 81–122–M
  - Dynamic random access memories ---- 81–122–N
  - Glass lamination strips ---- 81–122–O
  - Engines, diesel ---- 81–122–P
  - Tractor cabs, completely knocked down ---- 81–122–Q
  - Stepper motors, drive motor assemblies ---- 81–122–R
  - Laser printer mechanisms and casework ---- 81–122–S
  - Norethindrone ---- 81–122–T
  - Benzenoid chemicals ---- 81–122–U
  - Polyethylene resins ---- 81–122–V
  - Tobacco ---- 81–122–W
  - Parts ---- 81–122–X
  - Plywood and hardboard substrates ---- 81–122–Y
  - Bar steel, deformed hollow ---- 81–122–Z
- Synopses of drawback decisions ---- 81–123
  - Hydroquinone ---- 81–123–A
  - Thioglycolic acid ---- 81–123–B
  - Diethylmetaaminophenol ---- 81–123–C
  - 2-Mercaptoethanol ---- 81–123–D

Treasury Decisions—Continued
Synopses of drawback decisions—Continued
Leather in the rough 81–123–E, 81–123–H, 81–123–K, 81–123–M, 81–123–N, 81–123–Q, 81–123–S
Sugar, hard and liquid refined 81–123–F
Tricyclohexyltin hydroxide 81–123–I
4,4-dihydroxydiphenyl sulfone 81–123–J
Lead 81–123–L
Random access memories 81–123–O
Yarn, polyester 81–123–P
Stainless steel coils 81–123–R
Spring steel 81–123–T
Electron gun assembly 81–123–U
Yarn, raw filament nylon and polyester 81–123–V
Steel bars, alloy 81–123–W
Sausage rollstock, artificial fibrous 81–123–X
Vinyl plasticizers; resins 81–123–Y
Sodium sulfonate 81–123–Z

DEPARTMENT OF THE TREASURY
U.S. CUSTOMS SERVICE
WASHINGTON, D.C. 20229

OFFICIAL BUSINESS
PENALTY FOR PRIVATE USE, $300

POSTAGE AND FEES PAID
DEPARTMENT OF THE TREASURY (CUSTOMS)
(TREAS. 552)

U.S. GOVERNMENT PRINTING OFFICE: 1991

15/21

Customs Bulletin

Regulations, Rulings, Decisions, and Notices concerning Customs and related matters

and Decisions

of the United States Court of Customs and Patent Appeals and the United States Court of International Trade

Vol. 15 MAY 27, 1981 No. 21

NEWARK PUBLIC LIBRARY

JUN 1 9 1981

U. S. GOVT. PUBS.
DEPOSITORY 376

This issue contains

T.D. 81-127 through 81-145
Erratum
General Notice
Slip Op. 81-35 through 81-38
Reap. Abstracts R81/142 through R81/156
International Trade Commission Notics

THE DEPARTMENT OF THE TREASURY
U.S. Customs Service

T 1.11/3:

NOTICE

The abstracts, rulings, and notices which are issued weekly by the U.S. Customs Service are subject to correction for typographical or other printing errors. Users may notify the U.S. Customs Service, Logistics Management Division, Washington, D.C. 20229, of any such errors in order that corrections may be made before the bound volumes are published.

For sale by the Superintendent of Documents, U.S. Government Printing Office, Washington, D.C. 20402. Price: $2.25 (single copy domestic); $2.85 (single copy foreign). Subscription price: $85.00 a year domestic; $106.25 a year foreign.

U.S. Customs Service

Treasury Decisions

(T.D. 81-127)

American Manufacturer's Petition

Decision denying American manufacturer's petition requesting the reclassification of speedometers and odometers used on "exercisers": petitioner's desire to contest this decision

AGENCY: U.S. Customs Service, Department of the Treasury.

ACTION: Notice of (1) decision on American manufacturer's petition, and (2) receipt of notice of petitioner's desire to contest the decision.

SUMMARY: In response to an American manufacturer's petition requesting that speedometers and odometers used on "exercisers" (stationary exercise cycles) be reclassified under the provision for bicycle speedometers and parts thereof in item 711.93, Tariff Schedules of the United States (TSUS), rather than under the provision of parts of bicycles in item 732.42, TSUS, or under the provision for revolution counters or other speedometers in item 711.98, TSUS, or under the provision for sport, gymnastic, athletic, or playground equipment and parts thereof in item 735.20, TSUS, Customs advised the petitioner that for purposes of the tariff schedules, double-gear speedometers and odometers of a type chiefly used on "exercisers," would continue to be classified as speedometers other than bicycle speedometers in item 711.98, TSUS. Customs further advised the petitioner that standard single-gear speedometers of a type chiefly used on bicycles would continue to be classified under the provision for bicycle speedometers in item 711.93, TSUS. Upon being informed that its petition had been denied, the petitioner filed notice of its desire to contest the decision in accordance with section 516 of the Tariff Act of 1930, as amended.

FOR FURTHER INFORMATION CONTACT: Simon Cain, Classification and Value Division, U.S. Customs Service, 1301 Constitution Avenue, NW., Washington, D.C. 20229 (202-566-5727).

SUPPLEMENTARY INFORMATION:

BACKGROUND

A petition was filed under section 516, Tariff Act of 1930, as amended (19 U.S.C. 1516), by Stewart-Warner Corporation of Chicago, Illinois,

an American manufacturer, requesting that imported speedometers or odometers used on exercisers be reclassified under the provision for bicycle speedometers and parts thereof in item 711.93, Tariff Schedules of the United States (TSUS), (19 U.S.C. 1202), rather than under the provision for parts of bicycles in item 732.42, TSUS, or under the provision for revolution counters or other speedometers in item 711.98, TSUS, or under the provision for sport, gymnastic, athletic, or playground equipment and parts thereof in item 735.20, TSUS.

In support of its contention that speedometers or odometers used on "exercisers" are properly classifiable as bicycle speedometers under item 711.93, TSUS, the petitioner made the following arguments:

(1) Imported speedometers for use by original equipment manufacturers on so-called "exercisers" are indistinguishable for Customs purposes from bicycle speedometers in commerce, and, therefore, all such speedometers are properly classified under item 711.93, TSUS.

(2) Speedometers with double-gear hubs are not properly classified under item 711.98, TSUS.

(3) Current item 711.93, TSUS, covering "Bicycle speedometers and parts thereof" is not a use provision within the meaning of headnote 10(e)(i), TSUS, and

(4) "Bicycle speedometers" in item 711.93, TSUS, is an *eo nomine* designation.

In response to the notice of the petition which was published in the Federal Register on August 26, 1980 (45 F.R. 56961), two comments were received.

DECISION OF PETITION AND RECEIPT OF PETITIONER'S NOTICE OF DESIRE TO CONTEST

After consideration of the comments and further review of this matter, it is Customs position that double-gear speedometers and odometers of a type chiefly used on exercisers are classifiable under item 711.98, TSUS, and that standard single-gear speedometers of a type chiefly used on bicycles are classifiable under item 711.93, TSUS.

Further, it is Customs position that double-gear speedometers chiefly used on exercisers are not of the same class or kind as standard single-gear speedometers chiefly used on bicycles, and that the channels of trade in which the merchandise moves also recognize the different uses of the two types of speedometers.

By letters dated January 8, 1981, file No. 063419, and January 19, 1981, file No. 067053, the petitioner was advised that Customs had recently ruled that speedometers and odometers of a type chiefly used on exercisers were classifiable as speedometers other than bicycle speedometers in item 711.98, TSUS, and that standard single-gear

speedometers chiefly used on bicycles were classifiable under the provision for bicycle speedometers in item 711.93, TSUS, and therefore, that its petition was denied.

In response, by letter dated January 23, 1981, the petitioner filed notice of its desire to contest this decision in accordance with section 516(c), Tariff Act of 1930, as amended (19 U.S.C. 1516(c)), and section 175.23, Customs Regulations (19 CFR 175.23. However, under section 516(d), Tariff Act of 1930, as amended (19 U.S.C. 1516 (d)), the current Customs practice of classifying speedometers and odometers of a type chiefly used on exercisers as speedometers other than bicycle speedometers in item 711.98, TSUS, and standard single-gear speedometers chiefly used on bicycles under the provision for bicycle speedometers in item 711.93, TSUS, will continue so long as no decision of the United States Court of International Trade or the United States Court of Customs and Patent Appeals not in harmony with this practice is published.

AUTHORITY

This notice is being published in accordance with section 516(c), Tariff Act of 1930, as amended (19 U.S.C. 1516(c)), and section 175.24, Customs Regulations (19 CFR 175.24).

DRAFTING INFORMATION

The principal author of this document was Barbara E. Whiting, Regulations and Information Division, Office of Regulations and Rulings, U.S. Customs Service. However, personnel from other Customs offices participated in its development.

Dated: May 6, 1981.

WILLIAM T. ARCHEY,
Acting Commissioner of Customs.

[Published in the Federal Register May 12, 1981 (46 F.R. 26418)]

(T.D. 81-128)

Cotton, Wool, and Manmade Fiber Textile Products—Restriction on Entry

Restriction on entry of cotton, wool, and manmade fiber textile products manufactured or produced in Macau

There is published below a directive of December 8, 1980, received by the Commissioner of Customs from the Acting Chairman, Committee for the Implementation of Textile Agreements, concerning restriction on entry of cotton, wool, and manmade fiber textile products in various categories manufactured or produced in Macau.

This directive was published in the Federal Register on December 11, 1980 (45 F.R. 81643), by the Committee.

(QUO–2–1)

Dated: May 7, 1981.

WILLIAM D. SLYNE
(For Richard R. Rosettie, Acting
Director, Duty Assessment Division).

U.S. DEPARTMENT OF COMMERCE,
INTERNATIONAL TRADE ADMINISTRATION,
Washington, D.C., December 8, 1980.

Committee for the Implementation of Textile Agreements

COMMISSIONER OF CUSTOMS,
Department of the Treasury,
Washington, D.C.

DEAR MR. COMMISSIONER: Under the terms of the Arrangement Regarding International Trade in Textiles done at Geneva on December 20, 1973, as extended on December 15, 1977; pursuant to the Bilateral Cotton, Wool and Man-made Fiber Textile Agreement of November 29 and December 18, 1979, between the Governments of the United States and Portugal; and in accordance with the provisions of Executive Order 11651 of March 3, 1972, as amended by Executive Order 11951 of January 6, 1977, you are directed to prohibit, effective on January 1, 1981 and for the twelve-month period extending through December 31, 1981, entry into the United States for consumption and withdrawal from warehouse for consumption of cotton, wool and man-made fiber textile products in the following categories, produced or manufactured in Macau, in excess of the indicated levels of restraint:

Category	*12-month level of restraint*	
333/334/335	87,686	dozen of which not more than 47,813 dozen shall be in Cat. 333/335
337	28,000	dozen
338	115,042	dozen
339	489,475	dozen
340	110,275	dozen
341	75,382	dozen
347/348	262,655	dozen
445/446	64,518	dozen
659	203,724	pounds

In carrying out this directive entries of textile products in the foregoing categories, which have been exported to the United States prior to January 1, 1981, shall to the extent of any unfilled balances, be charged against the levels of restraint established for such goods during the twelve-month period beginning on January 1, 1980 and extending through December 31, 1980. In the event that the levels of restraint established for that period have been exhausted by previous entries, such goods shall be subject to the levels set forth in this letter.

The levels of restraint set forth above are subject to adjustment in the future pursuant to the provisions of the bilateral agreement of November 29 and December 18, 1979, which provide, in part, that: (1) within the aggregate and applicable group limits, specific levels of restraint may be exceeded by designated percentages; (2) these same levels may be increased for carryover and carryforward up to 11 percent of the applicable category limit; (3) administrative arrangements or adjustments may be made to resolve minor problems arising in the implementation of the agreement. Any appropriate adjustments under the provisions of the bilateral agreement referred to above will be made to you by letter.

A detailed description of the textile categories in terms of T.S.U.S.A. numbers was published in the Federal Register on February 28, 1980 (45 F.R. 13172), as amended on April 23, 1980 (45 F.R. 27463), and August 12, 1980 (45 F.R. 53506).

In carrying out the above directions, the Commissioner of Customs should construe entry into the United States for consumption to include entry for consumption into the Commonwealth of Puerto Rico.

The actions taken with respect to the Government of Portugal and with respect to imports of cotton, wool and man-made fiber textile products from Macau have been determined by the Committee for the Implementation of Textile Agreements to involve foreign affairs functions of the United States. Therefore, these directions to the Commissioner of Customs, which are necessary for the implementation of such actions, fall within the foreign affairs exception to the rule-making provisions of 5 U.S.C. 553. This letter will be published in the Federal Register.

Sincerely,

ARTHUR GAREL,
Acting Chairman, Committee for the Implementation of Textile Agreements.

(T.D. 81-129)

Cotton and Manmade Fiber Textile Products—Restriction on Entry

Restriction on entry of feather-filled cotton and manmade fiber apparel products manufactured or produced in certain countries

There is published below a directive of February 4, 1981, received by the Commissioner of Customs from the Chairman, Committee for the Implementation of Textile Agreements, concerning the export visa requirement for entry of feather-filled apparel in categories 353, 354, 653 and 654 manufactured or produced in Brazil, China, Colombia, Haiti, Hong Kong, India, Indonesia, Korea, Macau, Malaysia, Pakistan, Philippines, Singapore and Sri Lanka.

This directive was published in the Federal Register on February 9, 1981 (46 F.R. 11571), by the Committee.

(QUO-2-1)

Dated: May 7, 1981.

WILLIAM D. SLYNE
(For Richard R. Rosettie, Acting
Director, Duty Assessment Division).

U.S. DEPARTMENT OF COMMERCE,
INTERNATIONAL TRADE ADMINISTRATION,
Washington, D.C., February 4, 1981.

Committee for the Implementation of Textile Agreements

COMMISSIONER OF CUSTOMS,
Department of the Treasury,
Washington, D.C.

DEAR MR. COMMISSIONER: To facilitate implementation of the applicable visa arrangements in effect with the Governments of Brazil,[1] China, Colombia, Haiti, Hong Kong, India, Indonesia, the Republic of Korea, Macau, Malaysia, Pakistan,[1] the Republics of the Philippines and Singapore, and Sri Lanka, please waive, effective on February 9, 1981 and until further notice, the export visa requirement for feather-filled apparel in Categories 353 (T.S.U.S.A. number 748.4042), 354 (T.S.U.S.A. number 748.4044), 653 (T.S.U.S.A. number 748.4054) and 654 (T.S.U.S.A. number 748.4062), produced or manufactured in the foregoing countries.

---

[1] Only Categories 353 and 354 are involved.

This letter will be published in the Federal Register.

Sincerely,

PAUL T. O'DAY,
Chairman, Committee for the
Implementation of Textile Agreements.

(T.D. 81-130)

Manmade Fiber Textile Products—Restriction on Entry

Restriction on entry of manmade fiber textile products manufactured or produced in Haiti

There is published below a directive of March 3, 1981, received by the Commissioner of Customs from the Chairman, Committee for the Implementation of Textile Agreements, concerning restriction on entry of manmade fiber textile products in category 652 manufactured or produced in Haiti. This directive amends, but does not cancel, that Committee's directive of April 25, 1980 (T.D. 80-165).

This directive was published in the Federal Register on March 6, 1981 (46 F.R. 15530), by the Committee.

(QUO-2-1)

Dated: May 7, 1981.

WILLIAM D. SLYNE
(For Richard R. Rosettie, Acting
Director, Duty Assessment Division).

U.S. DEPARTMENT OF COMMERCE,
INTERNATIONAL TRADE ADMINISTRATION,
Washington, D.C., March 3, 1981.

Committee for the Implementation of Textile Agreements

COMMISSIONER OF CUSTOMS,
Department of the Treasury,
Washington, D.C.

DEAR MR. COMMISSIONER: This directive amends, but does not cancel, the directive issued to you on April 25, 1980 by the Chairman of the Committee for the Implementation of Textile Agreements which directed you to prohibit entry of cotton and man-made fiber textile products in certain specified categories, produced or manufactured in Haiti and exported during the year which began on May 1, 1980.

346-393 O - 81 - 2

Effective on March 3, 1981, paragraph 1 of the letter of April 25, 1980 is amended to increase the twelve-month level of restraint established for man-made fiber textile products in Category 652 to 610,000 dozen.[1]

The actions taken with respect to the Government of Haiti and with respect to imports of man-made fiber textile products from Haiti have been determined by the Committee for the Implementation of Textile Agreements to involve foreign affairs functions of the United States. Therefore, these directions to the Commissioner of Customs, which are necessary for the implementation of such actions, fall within the foreign affairs exception to the rule-making provisions of 5 U.S.C. 553. This letter will be published in the Federal Register.

Sincerely,

PAUL T. O'DAY,
Chairman, Committee for the
Implementation of Textile Agreements.

(T.D. 81-131)

Cotton, Wool, and Manmade Fiber Textile Products—Restriction on Entry

Restriction on entry of cotton, wool, and manmade fiber textile products manufactured or produced in Thailand

There is published below a directive of December 19, 1980, received by the Commissioner of Customs from the Chairman, Committee for the Implementation of Textile Agreements, concerning restriction on entry of cotton, wool, and manmade fiber textile products in various categories manufactured or produced in Thailand.

This directive was published in the Federal Register on December 24, 1980 (45 F.R. 85141), by the Committee.

(QUO-2-1)

Dated: May 7, 1981.

WILLIAM D. SLYNE
(For Richard R. Rosettie, Acting
Director, Duty Assessment Division).

---

[1] The level of restraint has not been adjusted to account for any entries after December 31, 1980.

U.S. DEPARTMENT OF COMMERCE,
INTERNATIONAL TRADE ADMINISTRATION,
Washington, D.C., December 19, 1980.

Committee for the Implementation of Textile Agreements

COMMISSIONER OF CUSTOMS,
Department of the Treasury,
Washington, D.C.

DEAR MR. COMMISSIONER: Under the terms of the Arrangement Regarding International Trade in Textiles done at Geneva on December 20, 1973, as extended on December 15, 1977; pursuant to the Bilateral Cotton, Wool and Man-Made Fiber Textile Agreement of October 4, 1978, as amended, between the Governments of the United States and Thailand; and in accordance with the provisions of Executive Order 11651 of March 3, 1972, as amended by Executive Order 11951 of January 6, 1977, you are directed to prohibit, effective on January 1, 1981 and for the twelve-month period beginning on January 1, 1981, and extending through December 31, 1981, entry into the United States for consumption and withdrawal from warehouse for consumption of cotton, wool, and manmade fiber textile products in the following categories exported from Thailand, in excess of the indicated twelve-month levels of restraint:

Category	*12-month level of restraint*	
319	5,000,000	square yards
320	8,000,000	square yards
331	385,014	dozen pairs
334/335	50,426	dozen
336	22,075	dozen
338/339	546,165	dozen
340	96,326	dozen
341	101,699	dozen
347/348	172,056	dozen
435	1,852	dozen
445/446	14,541	dozen
604	487,805	pounds
639	1,199,727	dozen
640	41,667	dozen
641	152,075	dozen
645/646	69,327	dozen

In carrying out this directive, entries of textile products in the foregoing categories, except Categories 445/446 and 640, produced or

manufactured in Thailand which have been exported to the United States on and after January 1, 1980 and extending through December 31, 1980, shall to the extent of unfilled balances, be charged against the levels of restraint established for such goods during the twelve-month period beginning on January 1, 1980 and extending through December 31, 1980. In the event the levels of restraint established for that period have been exhausted by previous entries, such goods shall be subject to the levels set forth in this letter. Textile products in Categories 445/446 and 640 that been exported to United States before January 1, 1981 shall not be subject to this directive.

The levels of restraint set forth above are subject to adjustment according to the provisions of the bilateral agreement of October 4, 1978, as amended, between the Governments of the United States and Thailand which provide, in part, that: (1) specific levels of restraint may be increased for carryover and carryforward up to 11 percent of the applicable category limit; and (2) administrative arrangements or adjustments may be made to resolve problems arising in the implementation of the agreement. Any appropriate adjustments under the provisions of the bilateral agreement, referred to above, will be made to you by letter.

A detailed description of the textile categories in terms of T.S.U.S.A. numbers was published in the Federal Register on February 28, 1980 (45 F.R. 13172), as amended on April 23, 1980 (45 F.R. 27463), and August 12, 1980 (45 F.R. 53506).

In carrying out the above directions, the Commissioner of Customs should construe entry into the United States for consumption to include entry for consumption into the Commonwealth of Puerto Rico.

The actions taken with respect to the Government of Thailand and with respect to imports of cotton, wool, and manmade fiber textile products from Thailand have been determined by the Committee for the Implementation of Textile Agreements to involve foreign affairs functions of the United States. Therefore, these directions to the Commissioner of Customs, which are necessary for the implementation of such actions, fall within the foreign affairs exception to the rule-making provisions of 5 U.S.C. 553. This letter will be published in the Federal Register.

Sincerely,

PAUL T. O'DAY,
Chairman, Committee for the
Implementation of Textile Agreements.

(T.D. 81-132)

Cotton, Wool, and Manmade Fiber Textile Products—Restriction on Entry

Restriction on entry of cotton, wool, and manmade fiber textile products manufactured or produced in India

There is published below a directive of December 16, 1980, received by the Commissioner of Customs from the Chairman, Committee for the Implementation of Textile Agreements, concerning restriction on entry of cotton, wool, and manmade fiber textile products in certain categories manufactured or produced in India.

This directive was published in the Federal Register on December 19, 1980 (45 F.R. 83648), by the Committee.

(QUO-2-1)

Dated: May 7, 1981.

WILLIAM D. SLYNE,
(For Richard R. Rosettie, Acting
Director, Duty Assessment Division).

U.S. DEPARTMENT OF COMMERCE,
INTERNATIONAL TRADE ADMINISTRATION,
Washington, D.C., December 16, 1980.

Committee for the Implementation of Textile Agreements

COMMISSIONER OF CUSTOMS,
Department of the Treasury,
Washington, D.C.

DEAR MR. COMMISSIONER: Under the terms of the Arrangement Regarding International Trade in Textiles done at Geneva on December 20, 1973, as extended on December 15, 1977; pursuant to the Bilateral Cotton, Wool and Man-Made Fiber Textile Agreement of December 30, 1977, as amended, between the Governments of the United States and India; and in accordance with the provisions of Executive Order 11651 of March 3, 1972, as amended by Executive Order 11951 of January 6, 1977, you are directed to prohibit, effective on January 1, 1981 and for the twelve-month period extending through December 31, 1981, entry into the United States for consumption and withdrawal from warehouse for consumption of cotton, wool and man-made fiber textile products in the following categories

accompanied by a visa, produced or manufactured in India, in excess of the indicated twelve-month levels of restraint.

Category	*12-month level of restraint*	
330–369, 431–469 and 630–699	43,370,197	square yards equivalent
	1,000,000	square yards
318	16,949	dozen
335	39,326	dozen
342	13,462	dozen
351, 359	152,174	pounds
447	5,556	dozen
636	15,453	dozen
640	29,167	dozen
641	48,276	dozen
666	256,410	pounds

Apparel products in Categories 330–359, 431–459 and 630–659 which are certified by the elephant certification shall be permitted entry up to a level of 3 million dozen for the twelve-month period beginning on January 1, 1981 and extending through December 31, 1981 and shall not be charged to the foregoing levels.

You are further directed to prohibit, effective on January 1, 1981 and for the twelve-month period extending through December 31, 1981, entry into the United States for consumption and withdrawal from warehouse for consumption of cotton textile products in Categories 336, 338/339/340, 341 and 347/348, produced or manufactured in India, whether accompanied by a visa or an elephant-shaped certification, in excess of the following levels of restraint:

Category	*12-month level of restraint*	
336	206,040	dozen
338/339/340	1,004,600	dozen
341	2,070,616	dozen
347/348	122,880	dozen

Cotton textile products in Categories 336, 338/339/340, 341 and 347/348 are also chargeable to the level of restraint established for Categories 330–369, 431–469 and 630–669, as a group, unless accompanied by an elephant certification in which case they shall be chargeable to the level of 3 million dozen established for apparel products in Categories 330–359, 431–459 and 630–659.

Floor coverings in Categories 369 (only T.S.U.S.A. numbers 360.7600 and 361.5420), 465 (only T.S.U.S.A. numbers 360.0500, 360.1015, 360.1515, 361.4200 and 361.4400), and 665 (only T.S.U.S.A. number 360.7800), shall not be subject to this directive.

In carrying out this directive, cotton, wool, and manmade fiber textile products in all of the foregoing categories, including products accompanied by the elephant certification, produced or manufactured in India and exported to the United States on and after January 1, 1980 and extending through December 31, 1980, shall, to the extent of any unfilled balances, be charged against the levels of restraint established for such goods during the twelve-month period beginning on January 1, 1980 and extending through December 31, 1980. In the event that the levels of restraint established for that period have been exhausted by previous entries, such goods shall be subject to the levels set forth in this directive.

The levels of restraint set forth above are subject to adjustment in the future, as applicable, according to the provisions of the bilateral agreement of December 30, 1977, as amended, between the Governments of the United States and India which provide, in part, that: (1) within the aggregate, group limits may be exceeded by designated percentages; (2) specific limits may be exceeded by various percentages subject to various provisions of the agreement; (3) consultation levels may be increased upon agreement between the two governments; and (4) administrative arrangements or adjustments may be made to resolve minor problems arising in the implementation of the agreement. Any appropriate adjustments under the provisions of the bilateral agreement referred to above will be made to you by letter.

A detailed description of the textile categories in terms of T.S.U.S.A. numbers was published in the Federal Register on February 28, 1980 (45 F.R. 13172) as amended on April 23, 1980 (45 F.R. 27463), and August 12, 1980 (45 F.R. 53506).

In carrying out the above directions, the Commissioner of Customs should construe entry into the United States for consumption to include entry for consumption into the Commonwealth of Puerto Rico.

The actions taken with respect to the Government of India and with respect to imports of cotton, wool and manmade fiber textile products from India have been determined by the Committee for the Implementation of Textile Agreements to involve foreign affairs functions of the United States. Therefore, these directions to the Commissioner of Customs, which are necessary for the implementation of such actions, fall within the foreign affairs exception to the rule-making provisions of 5 U.S.C. 553. This letter will be published in the Federal Register.

Sincerely,

PAUL T. O'DAY,
Chairman, Committee for the Implementation of Textile Agreements.

(T.D. 81-133)

Cotton, Wool, and Manmade Fiber Textile Products—Restriction on Entry

Restriction on entry of cotton, wool, and manmade fiber textile products manufactured or produced in Taiwan

There is published below a directive of December 19, 1980, received by the Commissioner of Customs from the Chairman, Committee for the Implementation of Textile Agreements, concerning restriction on entry of cotton, wool, and manmade fiber textile products in certain categories manufactured or produced in Taiwan.

This directive was published in the Federal Register on December 29, 1980 (45 F.R. 85497), by the Committee.

(QUO-2-1)

Dated: May 7, 1981.

WILLIAM D. SLYNE
(For Richard R. Rosettie, Acting
Director, Duty Assessment Division).

U.S. DEPARTMENT OF COMMERCE,
INTERNATIONAL TRADE ADMINISTRATION,
Washington, D.C., December 19, 1980.

Committee for the Implementation of Textile Agreements

COMMISSIONER OF CUSTOMS,
Department of the Treasury,
Washington, D.C.

DEAR MR. COMMISSIONER: Under the terms of the Arrangement Regarding International Trade in Textiles done at Geneva on December 20, 1973, as extended on December 15, 1977; pursuant to the Bilateral Textile Agreement of June 8, 1978, as amended, concerning cotton, wool, and manmade fiber textile products from Taiwan; and in accordance with the provisions of Executive Order 11951 of January 6, 1977, you are directed to prohibit, effective on January 1, 1981 and for the twelve month period extending through December 31, 1981, entry into the United States for consumption and withdrawal from warehouse for consumption of cotton, wool, and manmade fiber textile products in the following categories, produced or manufactured in Taiwan, in excess of the indicated levels of restraint:

Category	*12-month level of restraint*	
331	468,311	dozen pairs
333/334/335	106,651	dozen of which not more than 55,855 dozen shall be in Cat. 333/334 and not more than 66,795 dozen shall be in Cat. 335.
333/339	519,948	dozen
340	638,150	dozen
341	369,662	dozen
347/348	882,414	dozen of which not more than 433,382 dozen shall be in Cat. 347 and not more than 669,636 dozen shall be in Cat. 348.
445/446	125,033	dozen
633/634/635	1,432,988	dozen of which not more than 945,079 dozen shall be in Cat. 633/634 and not more than 702,857 dozen shall be in Cat. 635.
638	1,610,499	dozen
639	5,033,179	dozen
640	3,190,085	dozen
641	696,741	dozen
648	3,058,984	dozen
659 pt.[1]	3,061,810	pounds

You are further directed, effective on January 1, 1981 and for the five-month period extending through May 31, 1981, to prohibit entry into the United States for consumption and withdrawal from warehouse for consumption of feather-filled jackets, coats and vests in T.S.U.S.A. numbers 748.4042, 748.4044, 748.4054 and 748.4062, in excess of a five-month interim level of restraint of 100,457 dozen. The five-month interim level for Category 645/646 will be 1,973,511 dozen.

In carrying out this directive entries of textile products in the foregoing categories, which have been exported to the United States on and after January 1, 1980 and extending through December 31, 1980, shall to the extent of any unfilled balances, be charged against the levels of restraint established for such goods during the twelve-month

[1] In Category 659, only T.S.U.S.A. numbers 703.0500 and 703.1000.

period beginning on January 1, 1980 and extending through December 31, 1980. In the event that the levels of restraint established for that period have been exhausted by previous entries, such goods shall be subject to the levels set forth in this letter.

The levels of restraint set forth above are subject to adjustment in the future pursuant to the provisions of the bilateral agreement of June 8, 1978 as amended, which provide in part, that: (1) within the aggregate and applicable group limits, specific levels of restraint may be exceeded by designated percentages; (2) these same levels may be increased for carryover and carryforward up to 11 percent of the applicable category limit; (3) administrative arrangements or adjustments may be made to resolve problems arising in the implementation of the agreement. Any appropriate adjustments under the provisions of the bilateral agreement referred to above will be made to you by letter.

A detailed description of the textile categories in terms of T.S.U.S.A. numbers was published in the Federal Register on February 28, 1980 (45 F.R. 13172), as amended on April 23, 1980 (45 F.R. 27463), and August 12, 1980 (45 F.R. 53506).

In carrying out the above directions, the Commissioner of Customs should construe entry into the United States for consumption to include entry for consumption into the Commonwealth of Puerto Rico.

The actions taken with respect to the authorities in Taiwan and with respect to imports of cotton, wool, and man-made fiber textile products from Taiwan have been determined by the Committee for the Implementation of Textile Agreements to involve foreign affairs functions of the United States. Therefore, these directions to the Commissioner of Customs, which are necessary for the implementation of such actions, fall within the foreign affairs exception to the rule-making provisions of 5 U.S.C. 553. This letter will be published in the Federal Register.

Sincerely,

PAUL T. O'DAY,
Chairman, Committee for the Implementation of Textile Agreements.

(T.D. 81-134)

Cotton, Wool, and Manmade Fiber Textile Products—Restriction on Entry

Restriction on entry of cotton, wool, and manmade fiber textile products manufactured or produced in the Republic of Korea

There is published below a directive of December 23, 1980, received by the Commissioner of Customs from the Chairman, Committee for

the Implementation of Textile Agreements, concerning restriction on entry of cotton, wool, and manmade fiber textile products in various categories manufactured or produced in the Republic of Korea.

This directive was published in the Federal Register on December 30, 1980 (45 F.R. 85811), by the Committee.

(QUO-2-1)

Dated: May 7, 1981.

WILLIAM D. SLYNE
(For Richard R. Rosettie, Acting
Director, Duty Assessment Division).

U.S. DEPARTMENT OF COMMERCE,
INTERNATIONAL TRADE ADMINISTRATION,
Washington, D.C., December 23, 1980.

Committee for the Implementation of Textile Agreements

COMMISSIONER OF CUSTOMS,
Department of the Treasury,
Washington, D.C.

DEAR MR. COMMISSIONER: Under the terms of the Arrangement Regarding International Trade in Textiles done at Geneva on December 20, 1973, as extended on December 15, 1977; pursuant to the Bilateral Cotton, Wool and Man-Made Fiber Textile Agreement of December 23, 1978, as amended, between the Governments of the United States and Republic of Korea; and in accordance with the provisions of Executive Order 11651 of March 3, 1972, as amended by Executive Order 11951 of January 6, 1977, you are directed to prohibit, effective on January 1, 1981 and for the twelve-month period extending through December 31, 1981, entry into the United States for consumption and withdrawal from warehouse for consumption of cotton, wool, and manmade fiber textile products in the following categories, produced or manufactured in Korea, in excess of the indicated levels of restraint:

Category	*12-month level of restraint*
Group I (300, 301, 310–320, 330, 360–363, 369, 600–605, 610–614, 625–627, 630,	141,285,894 square yards equivalent.

Category	*12-month level of restraint*	
Group I (300, 665, 666, and 669)	141,285,894	square yards equivalent.
333/334/335	92,475	dozen of which not more than 52,618 dozen shall be in Category 333/334 not more than 53,728 dozen shall be in Category 335.
338/339	504,099	dozen.
340	163,226	dozen.
341	101,689	dozen.
	243,328	dozen of which not more than 171,825 dozen shall be in Category 347 and not more than 132,336 dozen shall be in Category 348.
433/434	16,691	dozen of which not more than 12,136 dozen shall be in Category 433 and not more than 6,224 dozen shall be in Category 434.
440	206,059	dozen.
444	3,906	dozen.
445/446	50,413	dozen.
633/634/635	1,347,719	dozen of which not more than 170,238 dozen shall be in Category 633; not more than 784,220 dozen shall be in Category 634; and not more than 595,418 dozen shall be in Category 635.
638/639	5,367,635	dozen.
640 pt.[1]	4,320,773	dozen.
640 pt.[2]	1,598,731	dozen.
641	994,774	dozen.
643	58,903	dozen.
645/646	3,126,416	dozen.
659 pt.[3]	2,134,965	pounds.

[1] In Category 640, only T.S.U.S.A. numbers 380.0455, 380.8431 and 380.8433.
[2] In Category 640, all T.S.U.S.A. numbers except those listed in footnote 1.
[3] In Category 659, only T.S.U.S.A. numbers 703.0500, 703.1000 and 703.1515.

In carrying out this directive, entries of textile products in the foregoing categories, except Category 659 pt., which have been exported to the United States on and after January 1, 1980 and extending through December 31, 1980, shall, to the extent of any unfilled balances be charged against the levels of restraint established for such goods during the twelve-month period beginning on January 1, 1980 and extending through December 31, 1980. In the event that the levels of restraint established for that period have been exhausted by previous entries, such goods shall be subject to the levels set forth in this letter. Textile products in Category 659 pt. which have been exported prior to January 1, 1981 shall not be subject to this directive.

The levels of restraint set forth above are subject to adjustment in the future pursuant to the provisions of the bilateral agreement of December 23, 1977, as amended, between the Governments of the United States and the Republic of Korea, which provide, in part, that: (1) within the aggregate and applicable group limits, specific levels of restraint may be adjusted by designated percentages; (2) these same levels may be adjusted for carryover and carryforward up to 11 percent of the applicable category limit; (3) administrative arrangements or adjustments may be made to resolve problems arising in the implementation of the agreement. Any appropriate adjustments under the provisions of the bilateral agreement referred to above will be made to you by letter.

A detailed description of the textile categories in terms of T.S.U.S.A. numbers was published in the Federal Register on February 28, 1980 (45 F.R. 13172), as amended on April 23, 1980 (45 F.R. 27463), and August 12, 1980 (45 F.R. 53506).

In carrying out the above directions, the Commissioner of Customs should construe entry into the United States for consumption to include entry for consumption into the Commonwealth of Puerto Rico.

The actions taken with respect to the Government of the Republic of Korea and with respect to imports of cotton, wool and man-made fiber textile products from the Republic of Korea have been determined by the Committee for the Implementation of Textile Agreement, to involve foreign affairs functions of the United States. Therefore, these directions to the Commissioner of Customs, which are necessary for the implementation of such actions, fall within the foreign affairs exception to the rule-making provisions of 5 U.S.C. 553. This letter will be published in the Federal Register.

Sincerely,

PAUL T. O'DAY,
Chairman, Committee for the
Implementation of Textile Agreements.

(T.D. 81-135)

Cotton, Wool, and Manmade Fiber Textile Products—Restriction on Entry

Restriction on entry of cotton, wool, and manmade fiber textile products manufactured or produced in the Republic of the Philippines

There is published below a directive of December 19, 1980, received by the Commissioner of Customs from the Chairman, Committee for the Implementation of Textile Agreements, concerning restriction on entry of cotton, wool, and manmade fiber textile products in certain categories manufactured or produced in the Republic of the Philippines.

This directive was published in the Federal Register on December 29, 1980 (45 F.R. 85498), by the Committee.

(QUO-2-1)

Dated: May 7, 1981.

WILLIAM D. SLYNE
(For Richard R. Rosettie, Acting
Director, Duty Assessment Division).

U.S. DEPARTMENT OF COMMERCE,
INTERNATIONAL TRADE ADMINISTRATION,
Washington, D.C., December 19, 1980.

Committee for the Implementation of Textile Agreements

COMMISSIONER OF CUSTOMS,
Department of the Treasury,
Washington, D.C.

DEAR MR. COMMISSIONER: Under the terms of the Arrangement Regarding International Trade in Textiles done at Geneva on December 20, 1973, as extended on December 15, 1977; pursuant to the Bilateral Cotton, Wool and Man-Made Fiber Textile Agreement of August 22 and 24, 1978, as amended, between the Governments of the United States and the Republic of the Philippines; and in accordance with the provisions of Executive Order 11651 of March 3, 1972, as amended by Executive Order 11951 of January 6, 1977, you are directed to prohibit, effective on January 1, 1981 and for the twelve-month period extending through December 31, 1981, entry into the United States for consumption and withdrawal from warehouse for consumption of cotton, wool and man-made fiber textile products

in Categories 331, 333/334, 335, 338/339, 340, 341pt., 442, 445/446, 604, 631, 635pt., 636pt., 640, 641, 645/646pt. and 649, produced or manufactured in the Philippines, in excess of the following levels of restraint:

Category	*12-month level of restraint*	
331	602,603	dozen pairs.
333/334	75,741	dozen of which not more than 29,504 dozen shall be in Cat. 333.
335 pt.[1]	33,539	dozen.
335 pt.[2]	32,480	dozen.
338/339	738,766	dozen.
340	227,107	dozen.
341 pt.[3]	83,110	dozen.
442	6,517	dozen.
445/446	17,595	dozen.
604	2,094,110	pounds.
631	1,557,306	dozen pairs.
635 pt.[4]	202,312	dozen.
636 pt.[5]	41,457	dozen.
640	95,845	dozen.
641 pt.[6]	64,759	dozen.
641 pt.[7]	168,244	dozen.
645/646 pt.[8]	86,942	dozen.
649	3,715,713	dozen.

In carrying out this directive entries of textile products in the foregoing categories, except Categories 333/334 and 338/339 which have been exported to the United States on and after January 1, 1980 and extending through December 31, 1980, shall, to the extent of any unfilled balances, be charged against the levels of restraint established for such goods during the twelve-month period beginning on January 1, 1980 and extending through December 31, 1980. In the event that the levels of restraint established for that period have been exhausted by previous entries, such goods shall be subject to the levels set forth in this letter. Textile products in Categories 333/334 and 338/339 exported prior to January 1, 1981, shall not be subject to this directive.

---

[1] In Category 335, only T.S.U.S.A. numbers 382.1202, 382.1204, 382.1206, 382.1217 and 382.1223.
[2] In Category 335, all T.S.U.S.A. numbers except those listed in footnote 1.
[3] In Category 341, all T.S.U.S.A. numbers except 382.0045, 382.3304, 382.3307 and 382.3311.
[4] In Category 635, all T.S.U.S.A. numbers in the Category except 382.7828.
[5] In Category 636, all T.S.U.S.A. numbers except 382.0414, 382.0467, 382.7833 and 382.8175.
[6] In Category 641, only T.S.U.S.A. numbers 382.0460 and 382.8139.
[7] In Category 641, all T.S.U.S.A. numbers except those listed in footnote 6.
[8] In Category 645/646, all T.S.U.S.A. numbers in the category except 382.0427 and 382.7870.

The levels of restraint set forth above are subject to adjustment according to the provisions of the bilateral agreement of August 22, and 24, 1978, as amended, between the Governments of the United States and the Republic of the Philippines which provide, in part, that: (1) three percent growth shall be applied to certain specified ceilings during the second and each successive agreement year; and (2) administrative arrangements or adjustments may be made to resolve problems arising in the implementation of the agreement. Any appropriate adjustments under the provisions of the bilateral agreement referred to above will be made to you by letter.

A detailed description of the textile categories in terms of T.S.U.S.A. numbers was published in the Federal Register on February 28, 1980 (45 F.R. 13172), as amended on April 23, 1980 (45 F.R. 27463), and August 12, 1980 (45 F.R. 53506).

In carrying out the above directions, the Commissioner of Customs should construe entry into the United States for consumption to include entry for consumption into the Commonwealth of Puerto Rico.

The actions taken with respect to the Government of the Republic of the Philippines and with respect to imports of cotton, wool and man-made fiber textile products from the Philippines have been determined by the Committee for the Implementation of Textile Agreements to involve foreign affairs functions of the United States. Therefore, these directions to the Commissioner of Customs, which are necessary for the implementation of such actions, fall within the foreign affairs exception to the rule-making provisions of 5 U.S.C. 553. This letter will be published in the Federal Register.

Sincerely,

PAUL T. O'DAY,
Chairman, Committee for the Implementation of Textile Agreements.

(T.D. 81-136)

Cotton and Manmade Fiber Textile Products—Restriction on Entry

Restriction on entry of cotton and manmade fiber textile products manufactured or produced in Sri Lanka

There is published below a directive of February 17, 1981, received by the Commissioner of Customs from the Chairman, Committee for the Implementation of Textile Agreements, concerning restriction on entry of cotton and manmade fiber textile products in certain categories manufactured or produced in Sri Lanka. This directive

amends, but does not cancel, that Committee's directive of September 9, 1980 (T.D. 80–258).

This directive was published in the Federal Register on February 23, 1981 (46 F.R. 13541), by the Committee.

(QUO–2–1)

Dated: May 7, 1981.

WILLIAM D. SLYNE
(For Richard R. Rosettie, Acting
Director, Duty Assessment Division).

U.S. DEPARTMENT OF COMMERCE,
INTERNATIONAL TRADE ADMINISTRATION,
Washington, D.C., February 17, 1981.

Committee for the Implementation of Textile Agreements

COMMISSIONER OF CUSTOMS,
Department of the Treasury,
Washington, D.C.

DEAR MR. COMMISSIONER: This directive further amends, but does not cancel, the letter of September 9, 1980 from the Chairman, Committee for the Implementation of Textile Agreements, which directed you to prohibit entry for consumption and withdrawal from warehouse for consumption during the twelve-month period which began on May 1, 1980 and extends through April 30, 1981, of cotton and man-made fiber textile products in certain specified categories, produced or manufactured in Sri Lanka, in excess of designated levels of restraint.

Effective on February 17, 1981, paragraph 1 of the letter of September 9, 1980 is amended to include an adjusted twelve-month sublimit of 385,000 dozen for cotton textile products in Category 340 within the overall level established for Category 340/341/640/641.[1]

The actions taken with respect to the Government of Sri Lanka and with respect to imports of cotton textile products from Sri Lanka have been determined by the Committee for the Implementation of Textile Agreements to involve foreign affairs functions of the United States. Therefore, these directions to the Commissioner of Customs, which are necessary for the implementation of such actions, fall within the foreign affairs exception to the rule-making provisions of 5 U.S.C. 553. This letter will be published in the Federal Register.

Sincerely,

PAUL T. O'DAY,
Chairman, Committee for the
Implementation of Textile Agreements.

---

[1] The adjusted sublimit for Category 340 has not been adjusted to reflect any imports after December 31, 1980.

346-393 O - 81 - 4

(T.D. 81-137)

Bonds

Approval of a carrier's bond, Customs Form 3587

A bond of a carrier for the transportation of bonded merchandise has been approved as shown below. The approval of the bond is temporary until August 22, 1981.

Name of principal and surety	Date of bond	Date of approval	Filed with district director/area director/amount
Central States Trucking, Co., 1311 S. 1st Ave., Maywood, Ill.; motor carrier; National Surety Corp.	Apr. 15, 1981	Apr. 23, 1981	Chicago, Ill. $25,000

(BON-3-03)

Dated: May 7, 1981.

MARILYN G. MORRISON,
Director,
Carriers, Drawback and Bonds Division.

(T.D. 81-138)

Wool Textile Products—Restriction on Entry

Restriction on entry of wool textile products manufactured or produced in the People's Republic of China

There is published below a directive of January 14, 1981, received by the Commissioner of Customs from the Chairman, Committee for the Implementation of Textile Agreements, concerning restriction on entry of wool textile products in categories 445/446 manufactured or produced in the People's Republic of China.

This directive was published in the Federal Register on January 19, 1981 (46 F.R. 5033), by the Committee.

(QUO-2-1)

Dated: May 13, 1981.

RICHARD R. ROSETTIE,
Acting Director,
Duty Assessment Division.

U.S. DEPARTMENT OF COMMERCE,
INTERNATIONAL TRADE ADMINISTRATION,
Washington, D.C., January 14, 1981.

Committee for the Implementation of Textile Agreements

COMMISSIONER OF CUSTOMS,
Department of the Treasury,
Washington, D.C.

DEAR MR. COMMISSIONER: Under the terms of the Bilateral Cotton, Wool and Man-Made Fiber Textile Agreement of September 17, 1980, between the Governments of the United States and the People's Republic of China, and in accordance with the provisions of Executive Order 11651 of March 3, 1972, as amended by Executive Order 11951 of January 6, 1977, you are directed to prohibit, effective on January 19, 1981 and for the period which began on October 19, 1980 and extends through January 16, 1982, entry into the United States for consumption and withdrawal from warehouse for consumption of wool textile products in Category 445/446, produced or manufactured in the People's Republic of China and exported on and after October 19, 1980, in excess of 183,706 dozen.[1]

Textile products in Category 445/446 which have been exported to the United States prior to October 19, 1980 shall not be subject to this directive.

Textile products in Category 445/446 which have been released from the custody of the U.S. Customs Service under the provisions of 19 U.S.C. 1448(b) or 1484(a)(1)(A) prior to the effective date of this directive shall not be denied entry under this directive.

A detailed description of the textile categories in terms of T.S.U.S.A. numbers was published in the Federal Register on February 28, 1980 (45 F.R. 13172), as amended on April 23, 1980 (45 F.R. 27463), August 12, 1980 (45 F.R. 53506), and December 24, 1980 (45 F.R. 85142).

In carrying out the above directions, the Commissioner of Customs should construe entry into the United States for consumption to include entry for consumption into the Commonwealth of Puerto Rico.

The actions taken with respect to the Government of the People's Republic of China and with respect to imports of wool textile products from China have been determined by the Committee for the Implementation of Textile Agreements to involve foreign affairs functions of the United States. Therefore, these directions to the Commissioner of Customs, which are necessary for the implementation

---

[1] The level of restraint has not been adjusted to reflect any entries after October 18, 1980.

of such actions, fall within the foreign affairs exception to the rule-making provisions of 5 U.S.C. 553. This letter will be published in the Federal Register.

Sincerely,

PAUL T. O'DAY,
Chairman, Committee for the Implementation of Textile Agreements.

(T.D. 81-139)

Cotton Textile Products—Restriction on Entry

Restriction on entry of cotton textile products manufactured or produced in Brazil

There is published below a directive of March 26, 1981, received by the Commissioner of Customs from the Chairman, Committee for the Implementation of Textile Agreements, concerning restriction on entry of cotton textile products in category 369 pt. manufactured or produced in Brazil.

This directive was published in the Federal Register on March 31, 1981 (46 F.R. 19513), by the Committee.

(QUO-2-1)

Dated: May 13, 1981.

RICHARD R. ROSETTIE,
Acting Director,
Duty Assessment Division.

U.S. DEPARTMENT OF COMMERCE,
INTERNATIONAL TRADE ADMINISTRATION,
Washington, D.C., March 26, 1981.

Committee for the Implementation of Textile Agreements

COMMISSIONER OF CUSTOMS,
Department of the Treasury,
Washington, D.C.

DEAR MR. COMMISSIONER: Under the terms of the Arrangement Regarding International Trade in Textiles done at Geneva on December 20, 1973, as extended on December 15, 1977; pursuant to the Bilateral Cotton Textile Agreement of April 22, 1976, as amended and extended, between the Governments of the United States and the Federative Republic of Brazil; and in accordance with the pro-

visions of Executive Order 11651 of March 3, 1972, as amended by Executive Order 11951 of January 6, 1977, you are directed to prohibit, effective on April 1, 1981 and for the twelve-month period extending through March 31, 1982, entry into the United States for consumption and withdrawal from warehouse for consumption of cotton textile products in Category 369 pt.,[1] produced or manufactured in Brazil, in excess of 719,570 pounds.

In carrying out this directive entries of cotton textile products in Category 369 pt., produced or manufactured in Brazil which have been exported to the United States on and after April 1, 1980 and extending through March 31, 1981, shall, to the extent of any unfilled balances, be charged against the levels of restraint established for such goods during the twelve-month period beginning on April 1,1980 and extending through March 31, 1981. In the event the levels of restraint established for that period have been exhausted by various entries, such goods shall be subject to the levels set forth in this letter.

The level of restraint set forth above is subject to adjustment in the future according to the provisions of the Bilateral Cotton Textile Agreement of April 22, 1976, as amended and extended, between the Governments of the United States and the Federative Republic of Brazil which provide, in part, that: (1) within the aggregate and applicable group limits, specific limits may be exceeded by designated percentages; (2) specific ceilings may be increased for carryover and carryforward up to 11 percent of the applicable category limit; and (3) administrative arrangements or adjustments may be made to resolve minor problems arising in the implementation of the agreement. Any appropriate future adjustments under the foregoing provisions of the bilateral agreement will be made to you by letter.

A detailed description of the textile categories in terms of T.S.U.S.A. numbers was published in the Federal Register on February 28, 1980 (45 F.R. 13172), as amended on April 23, 1980 (45 F.R. 27463), August 12, 1980 (45 F.R. 53506) and December 24, 1980 (45 F.R. 85142).

In carrying out the above directions, the Commissioner of Customs should construe entry into the United States for consumption to include entry for consumption into the Commonwealth of Puerto Rico.

The actions taken with respect to the Government of the Federative Republic of Brazil and with respect to imports of cotton textile products from Brazil have been determined by the Committee for the Implementation of Textile Agreements to involve foreign affairs functions of the United States. Therefore, these directions to the Commissioner of Customs, which are necessary for the implementa-

[1] In Category 369, only T.S.U.S.A. numbers 360.2000, 360.2500, 360.3000, 360.7600, 360.8100, 361.0510, 361.1820, 361.5000, 361.5420, and 361.5630.

tion of such actions, fall within the foreign affairs exception to the rule-making provisions of 5 U.S.C. 553. This letter will be published in the Federal Register.

Sincerely,

PAUL T. O'DAY,
Chairman, Committee for the Implementation of Textile Agreements.

(T.D. 81-140)

Cotton and Manmade Fiber Textile Products—Restriction on Entry

Restriction on entry of cotton and manmade fiber textile products manufactured or produced in Haiti

There is published below a directive of March 31, 1981, received by the Commissioner of Customs from the Chairman, Committee for the Implementation of Textile Agreements, concerning restriction on entry of cotton and manmade fiber textile products in certain categories manufactured or produced in Haiti. This directive amends, but does not cancel, that Committee's directive of April 25, 1980 (T.D. 80-165).

This directive was published in the Federal Register on April 3, 1981 (46 F.R. 20256), by the Committee.

(QUO-2-1)

Dated: May 13, 1981.

RICHARD R. ROSETTIE,
Acting Director,
Duty Assessment Division.

U.S. DEPARTMENT OF COMMERCE,
INTERNATIONAL TRADE ADMINISTRATION,
Washington, D.C., March 31, 1981.

Committee for the Implementation of Textile Agreements

COMMISSIONER OF CUSTOMS,
Department of the Treasury,
Washington, D.C.

DEAR MR. COMMISSIONER: On April 25, 1980, the Chairman, Committee for the Implementation of Textile Agreements, directed you to prohibit entry for consumption, or withdrawal from warehouse for consumption, during the twelve-month period beginning on May 1, 1980 and extending through April 30, 1981 of cotton and man-

made fiber textile products in certain specified categories, produced or manufactured in Haiti, in excess of designated levels of restraint. The Chairman further advised you that the levels of restraint are subject to adjustment.[1]

Effective on April 3, 1981, the levels of restraint established for Categories 349/649 and 632 in the directive of April 25, 1980 are amended to the following:

Category	*Amended 12-month level of restraint*[2]
349/649	1,250,636 dozen.
632	1,659,190 dozen pairs.

The actions taken with respect to the Government of Haiti and with respect to imports of cotton and manmade fiber textile products from Haiti have been determined by the Committee for the Implementation of Textile Agreements to involve foreign affairs functions of the United States. Therefore, these directions to the Commissioner of Customs, which are necessary for the implementation of such actions, fall within the foreign affairs exception to the rule-making provisions of 5 U.S.C. 553. This letter will be published in the Federal Register.

Sincerely,

PAUL T. O'DAY,
Chairman, Committee for the Implementation of Textile Agreements.

(T.D. 81-141)

Wool and Manmade Fiber Textile Products—Restriction on Entry

Restriction on entry of wool and manmade fiber textile products manufactured or produced in Romania

There is published below a directive of March 19, 1981, received by the Commissioner of Customs from the Chairman, Committee for the Implementation of Textile Agreements, concerning restriction on entry of wool and manmade fiber textile products in certain categories manufactured or produced in Romania.

---

[1] The term "adjustment" refers to those provisions of the Bilateral Cotton, Wool and Man-Made Fiber Textile Agreement of August 17, 1979, as amended, between the Governments of the United States and Haiti, which provide, in part, that: (1) for the second and third agreement years, each specific limit shall be increased by seven percent annually, except Category 349/649; (2) a specific ceiling may be exceeded in any agreement year by not more than seven percent of its square yards equivalent total, provided that the amount of the increase is compensated for by an equivalent decrease in one or more specific limits; (3) specific limits may also be increased for carryover and carryforward up to 11 percent of the applicable category limit; (4) administrative arrangements or adjustments may be made to resolve minor problems arising in the implementation of the agreement.

[2] The levels of restraint have not been adjusted to account for any imports after April 30, 1980.

This directive was published in the Federal Register on March 25, 1981 (46 F.R. 18576), by the Committee.

(QUO–2–1)

Dated: May 13, 1981.

RICHARD R. ROSETTIE,
Acting Director,
Duty Assessment Division.

U.S. DEPARTMENT OF COMMERCE,
INTERNATIONAL TRADE ADMINISTRATION,
Washington, D.C., March 19, 1981.

Committee for the Implementation of Textile Agreements

COMMISSIONER OF CUSTOMS,
Department of the Treasury,
Washington, D.C.

DEAR MR. COMMISSIONER: Under the terms of the Arrangement Regarding International Trade in Textiles done at Geneva on December 20, 1973, as extended on December 15, 1977; pursuant to the Bilateral Wool and Man-Made Fiber Textile Agreement of September 30, 1980, between the Governments of the United States and the Socialist Republic of Romania; and in accordance with the provisions of Executive Order 11651 of March 3, 1972, as amended by Executive Order 11951 of January 6, 1977, you are directed to prohibit, effective on April 1, 1981 and for the twelve-month period extending through March 31, 1982, entry into the United States for consumption and withdrawal from warehouse for consumption of wool and man-made fiber textile products in Categories 443, 465, 635 and 643/644pt., produced or manufactured in Romania, in excess of the following levels of restraint:

Category	*15-month level of restraint* [1]	
443	7,557	dozen
465	1,550,000	square feet.
635	41,162	dozen.
643/644pt.[1]	24,537	dozen.

In carrying out this directive, entries of textile products in the foregoing categories, except Category 465, produced or manufactured in

---

[1] In Category 643/644, only TSUSA numbers 380.0464, 380.5178, 380.8451, 380.8452, 382.0478, 382.4282, and 382.8187.

Romania, which have been exported to the United States on and after January 1, 1980 and extending through March 31, 1981, shall, to the extent of any unfilled balances, be charged against the levels of restraint established for such goods during the fifteen-month period beginning on January 1, 1980 and extending through March 31, 1981. In the event the levels of restraint established for that period have been exhausted by previous entries, such goods shall be subject to the levels set forth in this letter. Textile products in Category 465 that have been exported to the United States before April 1, 1981 shall not be subject to this directive.

The levels of restraint set forth above are subject to adjustment according to the provisions of the bilateral agreement of September 3, 1980, between the Governments of the United States and the Socialist Republic of Romania, which provide, in part, that: (1) specific levels of restraint may be increased for carryover and carryforward up to 11 percent of the applicable category limit; consultations maybe held to adjust levels of restraint for categories not subject to specific limits; and (2) administrative arrangements or adjustments may be made to resolve problems arising under these provisions of the agreement. Any appropriate adjustments under the bilateral agreement referred to above, will be made to you by letter.

A detailed description of the textile categories in terms of T.S.U.S.A. numbers was published in the Federal Register on February 28, 1980 (45 F.R. 13172), as amended on April 23, 1980 (45 F.R. 27463), August 12, 1980 (45 F.R. 53506) and December 24, 1980 (45 F.R. 85142).

In carrying out the above directions, the Commissioner of Customs should construe entry into the United States for consumption to include entry for consumption into the Commonwealth of Puerto Rico.

The actions taken with respect to the Government of the Socialist Republic of Romania and with respect to imports of wool and man-made fiber textile products from Romania have been determined by the Committee for the Implementation of Textile Agreements to involve foreign affairs functions of the United States. Therefore, these directions to the Commissioner of Customs, which are necessary for the implementation of such actions, fall within the foreign affairs exception to the rule-making provisions of 5 U.S.C. 553. This letter will be published in the Federal Register.

Sincerely,

PAUL T. O'DAY,
Chairman, Committee for the
Implementation of Textile Agreements.

346-393 0 - 81 - 5

(T.D. 81-142)

Cotton Textile Products—Restriction on Entry

Restriction on entry of cotton textile products manufactured or produced in Pakistan

There is published below a directive of March 9, 1981, received by the Commissioner of Customs from the Chairman, Committee for the Implementation of Textile Agreements, concerning restriction on entry of cotton textile products manufactured or produced in Pakistan for which the Government of Pakistan had not issued an appropriate visa. This directive amends, but does not cancel, that Committee's directive of June 28, 1972 (T.D. 72-208).

This directive was published in the Federal Register on March 12, 1981 (46 F.R. 16290), by the Committee.

(QUO-2-1)

Dated: May 13, 1981.

RICHARD R. ROSETTIE,
Acting Director,
Duty Assessment Division.

U.S. DEPARTMENT OF COMMERCE,
INTERNATIONAL TRADE ADMINISTRATION,
Washington, D.C., March 9, 1981.

Committee for the Implementation of Textile Agreements

COMMISSIONER OF CUSTOMS,
Department of the Treasury,
Washington, D.C.

DEAR MR. COMMISSIONER: This directive further amends, but does not cancel, the directive of June 28, 1972 from the Chairman, Committee for the Implementation of Textile Agreements, that directed you to prohibit, under certain specified conditions, entry into the United States for consumption and withdrawal from warehouse for consumption, of cotton textiles and cotton textile products, produced or manufactured in Pakistan, for which the Government of Pakistan had not issued an appropriate export visa.

Under the terms of the Arrangement Regarding International Trade in Textiles done at Geneva on December 20, 1973, as extended on December 15, 1977; pursuant to the Bilateral Cotton Textile Agree-

ment of January 4 and 9, 1978, as amended, between the Governments of the United States and Pakistan; and in accordance with the provisions of Executive Order 11651 of March 3, 1972, as amended by Executive Order 11951 of January 6, 1977, the final sentence of paragraph 2 of the June 28, 1972 letter is further amended, effective on March 9, 1981, to read as follows: "A facsimile of the stamp is enclosed".

The actions taken with respect to the Government of Pakistan and with respect to imports of cotton textile products from Pakistan have been determined by the Committee for the Implementation of Textile Agreements to involve foreign affairs functions of the United States Therefore, these directions to the Commissioner of Customs, which are necessary for the implementation of such actions, fall within the foreign affairs exception to the rule-making provisions of 5 U.S.C. 553. This letter will be published in the Federal Register.

Sincerely,

PAUL T. O'DAY,
Chairman, Committee for the
Implementation of Textile Agreements.

(T.D. 81-143)

Wool Textile Products—Restriction on Entry

Restriction on entry of wool textile products manufactured or produced in the Republic of the Philippines

There is published below a directive of April 14, 1981, received by the Commissioner of Customs from the Chairman, Committee for the Implementation of Textile Agreements, concerning restriction on entry of wool textile products in category 443 manufactured or produced in the Republic of the Philippines. This directive amends, but does not cancel, that Committee's directive of December 19, 1980 (T.D. 81-135).

This directive was published in the Federal Register on April 17, 1981 (46 F.R. 22419), by the Committee.

(QUO-2-1)

Dated: May 13, 1981.

RICHARD R. ROSETTIE,
Acting Director,
Duty Assessment Division.

U.S. DEPARTMENT OF COMMERCE,
INTERNATIONAL TRADE ADMINISTRATION,
Washington, D.C., April 14, 1981.

Committee for the Implementation of Textile Agreements

COMMISSIONER OF CUSTOMS,
Department of the Treasury,
Washington, D.C.

DEAR MR. COMMISSIONER: This directive amends, but does not cancel, the directive issued to you on December 19, 1980 by the Chairman, Committee for the Implementation of Textile Agreements, concerning imports into the United States of certain cotton, wool and man-made fiber textile products, produced or manufactured in the Philippines.

Under the terms of the Arrangement Regarding International Trade in Textiles done at Geneva on December 20, 1973, as extended on December 15, 1977; pursuant to the Bilateral Cotton, Wool and Man-Made Fiber Textile Agreements of August 22 and 24, 1978, as amended, between the Governments of the United States and the Republic of the Philippines; and in accordance with the provisions of Executive Order 11651 of March 3, 1972, as amended by Executive Order 11951 of January 6, 1977, you are directed to prohibit, effective on April 20, 1981, and for the twelve-month period beginning on January 1, 1981, and extending through December 31, 1981, entry into the United States for consumption and withdrawal from warehouse for consumption of wool textile products in Category 443, produced or manufactured in the Philippines, in excess of 2,194 dozen.[1]

Wool textile products in Category 443 which have been exported to the United States prior to January 1, 1981 shall not be subject to this directive.

Wool textile products in Category 443 which have been released from the custody of the U.S. Customs Service under the provisions of 19 U.S.C. 1448(b) or 1484(a)(1)(A) prior to the effective date of this directive shall not be denied entry under this directive.

A detailed description of the textile categories in terms of T.S.U.S.A. numbers was published in the Federal Register on February 28, 1980 (45 F.R. 13172), as amended on April 23, 1980 (45 F.R. 27463), August 12, 1980 (45 F.R. 53506) and December 24, 1980 (45 F.R. 85142).

In carrying out the above directions, the Commissioner of Customs should construe entry into the United States for consumption to

[1] The level of restraint has not been adjusted to reflect any imports after December 31, 1980.

include entry for consumption into the Commonwealth of Puerto Rico.

The actions taken with respect to the Government of the Republic of the Philippines and with respect to imports of wool textile products from the Philippines have been determined by the Committee for the Implementation of Textile Agreements to involve foreign affairs functions of the United States. Therefore, these directions to the Commissioner of Customs, which are necessary for the implementation of such actions, fall within the foreign affairs exception to the rule-making provisions of 5 U.S.C. 553. This letter will be published in the Federal Register.

Sincerely,

PAUL T. O'DAY,
Chairman, Committee for the
Implementation of Textile Agreements.

(T.D. 81-144)

Foreign Currencies—Variances From Quarterly Rate

The following rates of exchange are based upon rates certified to the Secretary of the Treasury by the Federal Reserve Bank of New York, pursuant to Section 522(C), Tariff Act of 1930, as amended (31 U.S.C. 372(c)), and reflect variances of 5 per centum or more from the quarterly rate published in Treasury Decision 81-82 for the following countries. Therefore, as to entries covering merchandise exported on the dates listed, whenever it is necessary for Customs purposes to convert such currency into currency of the United States, conversion shall be at the following rates.

Austria schilling:	
April 29-30, 1981	$0.063980
May 1, 1981	.063776
France franc:	
April 29, 1981	$0.190712
April 30, 1981	.190295
May 1, 1981	.191022
Germany deutches mark:	
April 29, 1981	$0.451875
April 30, 1981	.452386
May 1, 1981	Quarterly
Netherlands guilder:	
April 29, 1981	$0.406669
April 30, 1981	.407166
May 1, 1981	.407830

Switzerland franc:
April 29–30, 1981 ..... $0. 494805
May 1, 1981 495540

(LIQ–03–01 O:C:E)

Dated: May 1, 1981.

KENNETH A. RICH,
Chief,
Customs Information Exchange.

(T.D. 81–145)

Foreign Currencies—Daily Rates for Countries Not on Quarterly List

The Federal Reserve Bank of New York, pursuant to section 522(c), Tariff Act of 1930, as amended (31 U.S.C. 372(c)), has certified buying rates for the dates and foreign currencies shown below. The rates of exchange, based on these buying rates, are published for the information and use of Customs officers and others concerned pursuant to Part 159, Subpart C, Customs Regulations (19 CFR 159, Subpart C).

Argentina peso:
April 27–May 1, 1981 ..... $0. 000321

Brazil cruzeiro:
April 27–May 1, 1981 ..... $0. 012293

Chile peso:
April 27–May 1, 1981 ..... $0. 018921

People's Republic of China yuan:
April 27–29, 1981 ..... $0. 595309
April 30–May 1, 1981 592347

Colombia peso:
April 27–May 1, 1981 ..... $0. 018921

Greece drachma:
April 27, 1981 ..... $0. 018868
April 28, 1981 018727
April 29, 1981 018639
April 30–May 1, 1981 018553

Indonesia rupiah:
April 27–30, 1981 ..... $0. 001600
May 1, 1981 001590

Iran rial:
April 27–May 1, 1981 ..... $0. 013236

Israel shekel:	
April 27–May 1, 1981	$0. 107991
Peru sol:	
April 27–May 1, 1981	$0. 002469
Philippines peso:	
April 27–May 1, 1981	$0. 130548
Singapore dollar:	
April 27, 1981	$0. 473485
April 28, 1981	.473037
April 29, 1981	.471476
April 30, 1981	.471698
May 1, 1981	.470810
South Korea won:	
April 27–29, 1981	$0. 001475
April 30, 1981	.001473
May 1, 1981	.001471
Thailand baht (tical)	
April 27–May 1, 1981	$0. 048193
Venezuela bolivar:	
April 27–May 1, 1981	$0. 232883

(LIQ–03–01 O:C:E)

Dated: May 1, 1981.

KENNETH A. RICH,
Chief,
Customs Information Exchange.

ERRATUM

In CUSTOMS BULLETIN Vol. 15, No. 12, dated March 25, 1981, T.D. 81–50 the following rate should be corrected to:

Hong Kong dollar:	
February 27, 1981	$0. 187371

In CUSTOMS BULLETIN Vol. 15, No. 15, dated April 15, in T.D. 81–75 the following rates were omitted:

Finland markka:	
March 16, 1981	$0. 245700
Spain peseta:	
March 17, 1981	$0. 011827

Recent Unpublished Customs Service Decisions

The following listing of recent administrative decisions issued by the Office of Regulations and Rulings, U.S. Customs Service, and not otherwise published, is published for the information of Customs officers and the importing community. Although the decisions are not of sufficient general interest to warrant publication as Treasury Decisions, the listing describes the issues involved and is intended to aid Customs officers and concerned members of the public in identifying matters of interest which recently have been considered by the Office of Regulations and Rulings.

A copy of any decision included in this listing, identified by its date and file number, may be obtained in a form appropriate for public distribution upon written request to the Office of Regulations and Rulings, Attention: Legal Reference Area, Room 2404, U.S. Customs Service, 1301 Constitution Avenue NW., Washington, D.C. 20229. These copies will be made available at a cost to the requester of $0.10 per page. However, the Customs Service will waive this charge if the total number of pages copied is 10 or less.

Decisions listed in earlier issues of the Customs Bulletin, through December 9, 1980, are available in microfiche format at a cost of $27.15 ($0.15 per sheet of fiche). It is anticipated that additions to the microfiche will be made quarterly and subscriptions are available. Requests for the microfiche now available and for subscriptions should be directed to the Legal Reference Area. Subscribers will automatically receive updates as they are issued and will be billed accordingly.

Dated: May 7, 1981.

B. James Fritz,
Director,
Regulations and Information Division.

Date of decision	File No.	Issue
4- 3-81	542337	Valuation: whether a 25 percent discount may be excluded from statutory export value
3- 6-81	711320	Country of origin marking: socket blanks
4- 9-81	713715	Entry: motor vehicle parts and hand tools
4- 7-81	714639	Country of origin marking: imported parts of musical instruments for assemblage in the United States.
4- 7-81	715356	Country of origin marking: candy mints and minature toys
4- 7-81	715607	Country of origin marking: small semiconductors
3-19-81	800098	Classification: sorpkat, corn P04 ster, corn P04, and corn P04100k (493.68, 493.30)
3-16-81	800104	Classification: plastic containers (870.40, 666.00)
3-16-81	800106	Classification: wagons, hydraulic trailer-dumpers, dump trailers, loaders and wood splitters (666.00, 664.10, 664.08, 870.40, 674.42)
3-10-81	800108	Classification: men's cement jogger-style athletic shoe (700.58)
3-16-81	800110	Classification: unassembled housing of flapper drip line emitters used in farm tree and vine crop irrigation (870.45, 870.40)
3-17-81	800132	Classification: chemical substance described as a lubricant for the transportation chains of bottling plants (432.25, 465.30)
3-12-81	800136	Classification: various grades of wolfram concentrates and various chemical compounds (601.54, 603.45, 415.40, 416.40, 422.42)
3-12-81	800140	Classification: kerosene stoves used in the household (653.52).
3-19-81	800145	Classification: gold plated watch bracelets (740.10)
3-17-81	800148	Classification: game/toy (734.20)
3-23-81	800157	Classification: unassembled hopper railcar kit (690.35)
3-12-81	800160	Classification: non-benzenoid produced Tartaric acid and salts (425.94, 426.72, 426,82, 426.76)
3-12-81	800165	Classification: beachcomber sandal (700.60)
3-12-81	800167	Classification: vinyl and textile mittens (735.06, 704.90, 704.32)
3-12-81	800181	Classification: pencil cases and ring binder cases (706.60, 774.55)
3-12-81	800187	Classification: black elastic braid with 12 ribs of rubber and balance of either cotton or polyester (386.50, 389.62, 389.70)
3-19-81	800191	Classification: inflatable sled (735.06)
3-16-81	800200	Classification: leather glove components (791.90)
3-19-81	800202	Classification: seafood entrees (113.25, 113.50, 183.05)
3-17-81	800209	Classification: various machines (674.35, 648.97, 674.53, 674.56, 649.43)
3-19-81	800217	Classification: padlocks (646.80)
3-19-81	800219	Classification: off highway dump trucks and welded steel fabrications (692.02, 692.32, 692.20)

Date of decision	File No.	Issue
3-12-81	800227	Classification: ski gloves (735.06)
3-12-81	800228	Classification: ski gloves (735.06)
3-16-81	800229	Classification: Butylated Hydroxy Toluene (403.16)
3-16-81	800230	Classification: ladies casual shoes (700.60)
3-10-81	800234	Classification: ski gloves (735.06)
3-17-81	800243	Classification: whiskbrooms (750.32, 750.70)
3-16-81	800244	Classification: rotary compressors (661.12)
3-17-81	800248	Classification: CMB water welder (674.80, 660.22)
3-19-81	800251	Classification: UBS trooper vehicle (692.10)
3-23-81	800258	Classification: vinyl and textile mittens (735.06)
3-18-81	800265	Classification: sodium silicate (421.34)
3-23-81	800269	Classification: lifeboat/liferaft survival rations (183.05)
4- 1-81	800270	Classification: miner's headlamp (683.80)
3-19-81	800272	Classification: dietetic cheese spread (117.75, 117.88)
3-19-81	800274	Classification: bronze brazing rods (612.62)
3-24-81	800277	Classification: electric potato peeler (683.32)
3-23-81	800278	Classification: electric device for mounting photographic slides (678.50)
3-17-81	800280	Classification: tennis racket cover (734.88)
3-23-81	800285	Classification: nylon part or housing for a sliding window (774.55)
4- 7-81	800296	Classification: metal box parts (657.40)
4- 7-81	800299	Classification: men's knit western style shirts (380.04)
3-18-81	800312	Classification: toy plush Santa Claus skin (737.22)
4- 7-81	800316	Classification: various tools (648.85, 674.60, 674.35)
3-24-81	800327	Classification: ski gloves (735.06)
4- 2-81	800329	Classification: wood toothpicks (206.85)
4- 2-81	800334	Classification: "Fancy Packer" machine (662.20)
4- 2-81	800337	Classification: softwear for data processing (724.40)
4-10-81	800342	Classification: tire pressure tester/inflator (678.50)
4- 2-81	800353	Classification: inert gas system (661.95, 660.22)
4- 7-81	800364	Classification: various papers for wrapping, interleaving, twisting and laminating (252.79, 252.81)
4- 2-81	800369	Classification: heating equipment (678.50)
4-10-81	800394	Classification: neoprene and leather skin diving glove (735.07)
4-10-81	800413	Classification: doll clothing and doll accessories (737.21, 737.95)
4-10-81	800416	Classification: acrylic gloves (704.32)
2-12-81	064405	Classification: fiberglass spas used for communal bathing and hydrotherapy (770.10)
4- 3-81	065198	Classification: proper valuation of leather jackets appraised on the basis of export value
3-31-81	065299	Classification: footwear (700.60)
4- 6-81	065418	Classification: wall covering material (355.65, 359.50)
3-30-81	065457	Classification: electrical air freshener (688.45)
3- 5-81	065513	Classification: Napolitan custard, a prepared dessert (188.30)
4- 3-81	065645	Classification: wading shoes (700.60)

Date of decision	File No.	Issue
3-19-81	065685	Classification: gum mastic (188.38)
3-30-81	065751	Classification: weight lifting belt (376.28)
4- 7-81	065760	Classification: seamless knit acrylic gloves (704.32, 705.35, 705.83)
3-31-81	065763/ 065675	Classification: footwear (700.60, 700.35, 700.45, 700.95)
3-27-81	065821	Classification: metal picnic coolers (657.25)
4-10-81	065842	Classification: fish eggs (roe) (113.30 thru 113.40, 190.40)
3-12-81	065888	Classification: footwear (700.60)
3-31-81	065921	Classification: kitty litter made of pulp (256.90)
3-30-81	065932	Classification: sachet (386.09, 799.00)
4- 7-81	065956	Classification: footwear (700.60)
1-29-81	066134	Classification: multipurpose industrial robot (678.50)
4- 3-81	066202	Classification: two-piece plaited knit garment (378.15)
3-18-81	066737	Classification: woven jacquard figured fabric (357.05)
4- 6-81	066857	Classification: powder made from silk fibers (799.00)
3-31-81	066867	Classification: ladies' shawlette (382.78)
3-31-81	068005	Classification: plastic scalp massager (750.45, 750.47)
3-19-81	068007	Classification: crochet covered button and ring (386.10, 389.40, 745.34)
3-31-81	068118	Classification: women's slippers (700.60)
4- 2-81	068158	Classification: Christmas ornaments of wooden figures (737.22)
4- 8-81	068163	Classification: women's linen pullover (382.05)
4- 6-81	068256	Classification: main spring and sear spring used for muzzle-loading guns (730.10)
4- 8-81	068313	Classification: metal drawer slides (647.03)
4- 8-81	068315	Classification: jewelry box (386.09)

General Notices

Performance Review Boards; Appointment of Members

AGENCY: U.S. Customs Service, Department of the Treasury.

ACTION: General Notice.

SUMMARY: This notice announces the appointment of the members of the U.S. Customs Service Performance Review Boards (PRB's) in accordance with 5 U.S.C. 4313(c)(4). The purpose of the PRB's is to review senior executive employees' performance and make recommendations regarding performance and performance awards.

DATE: The Performance Review Boards became effective on May 1, 1981.

FOR FURTHER INFORMATION CONTACT: Alexander Faison, Director, Office of Human Resources, U.S. Customs Service, 1301 Constitution Avenue, N.W., Room 3417, Washington, D.C., (202) 566–5563.

SUPPLEMENTARY INFORMATION: There are two Performance Review Boards in the U.S. Customs Service as follows:

1. The Performance Review Board to review Senior Executives rated by the Commissioner and Deputy Commissioner (i.e., the Assistant to the Commissioner, the Special Assistants to the Commissioner, the Assistant Commissioners, and Regional Commissioners) is composed of the following members:

John Mangels—Director, Office of Operations, Department of the Treasury
William Rhodes—Director, Office of Management and Organization, Department of the Treasury
Myron Weinstein—Deputy Director, U.S. Secret Service
Stephen Higgins—Deputy Director, Bureau of Alcohol, Tobacco and Firearms

2. The Performance Review Board to review all other Senior Executives is composed of the following members:

Charles C. Hackett—Assistant Commissioner, Office of Management Integrity, U.S. Customs Service
George C. Corcoran, Jr.—Assistant Commissioner, Office of Border Operations, U.S. Customs Service
Alfred R. DeAngelus—Assistant Commissioner, Office of Commercial Operations, U.S. Customs Service
Jack T. Lacy—Comptroller, U.S. Customs Service

William J. Griffin—Regional Commissioner, U.S. Customs Service, 100 Summer Street, Boston, Massachusetts 02110
Dennis T. Snyder—Regional Commissioner, U.S. Customs Service, 6 World Trade Center, New York, New York 10048
John A. Hurley—Regional Commissioner, U.S. Customs Service, 40 S. Gay Street, Baltimore, Maryland 21202
Robert N. Battard—Regional Commissioner, U.S. Customs Service, 99 S.E. 5th Street, Miami, Florida 33131
Peter J. Dispenzirie—Regional Commissioner, U.S. Customs Service, 423 Canal Street, New Orleans, Louisiana 70130
Donald Kelly—Regional Commissioner, U.S. Customs Service, 500 Dallas Street, Houston, Texas 77002
Albert G. Bergesen—Regional Commissioner, U.S. Customs Service, 300 N. Los Angeles Street, Los Angeles, California 90053
Edward M. Ellis—Regional Commissioner, U.S. Customs Service, 211 Main Street, San Francisco, California 94105
Eugene H. Mach—Regional Commissioner, U.S. Customs Service, 55 E. Monroe Street, Chicago, Illinois 60603

Dated: May 7, 1981.

WILLIAM T. ARCHEY,
Acting Commissioner of Customs.

United States Court of International Trade

One Federal Plaza
New York, N.Y. 10007

Chief Judge

Edward D. Re

Judges

Paul P. Rao
Morgan Ford
Scovel Richardson
Fredrick Landis
James L. Watson
Herbert N. Maletz
Bernard Newman
Nils A. Boe

Senior Judge

Samuel M. Rosenstein

Clerk

Joseph E. Lombardi

Decisions of the United States Court of International Trade

(Slip Op. 81–35)

C. J. TOWER & SONS OF BUFFALO, INC., PLAINTIFF *v.* UNITED STATES, DEFENDANT

Court No. 79–12–02021

Valves

An importation of merchandise, described on the invoices as automatic livestock waterers or animal nipple drinkers, is claimed to be entitled to entry free of duty as agricultural implements under the provisions of item 666.00, TSUS. *Held*, properly classified under the provisions of item 680.22, TSUS, covering valves and, as such, duitable at 11 per centum ad valorem.

The record establishes to the satisfaction of the court that the imported merchandise is an agricultural implement within the decided case law. *United States* v. *Boker & Co.*, 6 Ct. Cust. Appls. 243, T.D.

35472 (1915); *United States* v. *S.S. Perry*, 25 CCPA 282, T.D. 49395 (1938).

However, not every agricultural implement was intended by Congress to be afforded free entry since headnote 1, part 4C of schedule 6, TSUS, provides an exclusion of "any of the arricles specially provided for elsewhere in the tariff schedules * * *." Congress provided a dutiable status for a number of agricultural or horticultural tools, implements or machines, i.e., lawnmowers, item 666.10, TSUS, certain cream separators, item 661.85, agricultural or horticultural hoes and rakes, item 648.55, and agricultural or horticultural forks, item 648.61.

The contention of plaintiff that the imported merchandise is "more than a valve" does not stand the test set forth in *E. Green & Son (New York), Inc.* v. *United States*, 59 CCPA 31 C.A.D. 1032, 450 F. 2d 1396 (1971) and *Englishtown Corporation* v. *United States*, 64 CCPA 34, C.A.D. 1187, 553 F. 2d 1258 (1977), which requires the common meaning to be determined and compared with the merchandise before the court.

The common meaning of the term "valve" and the Congressional intent cover such articles which control the flow of liquids, etc. The merchandise at bar falls within such meaning.

[Judgment for defendant.]

(Decided April 28, 1981)

Cushman, Darby & Cushman (*Robert A. Vanderhye* at the trial and on the briefs) for the plaintiff.

Thomas S. Martin, Acting Assistant Attorney General; *Joseph I. Liebman*, Attorney in Charge, International Trade Field Office, Commercial Litigation Branch (*Jerry P. Wiskin* at the trial and on the brief), for the defendant.

FORD, Judge: Plaintiff by this action seeks reclassification of certain articles described on the invoices variously as automatic livestock waterers or animal nipple drinkers,[1] model Nos. 10094 and 10095, imported from Canada. Customs classified the imported merchandise under item 680.22, TSUS, as valves and similar devices used to control the flow of liquids, and assessed duty thereon at the rate of 11 per centum ad valorem.

Plaintiff contends the merchandise is entitled to entry free of duty as agricultural implements under the provisions of item 666.00, TSUS.

The pertinent statutory provisions provide as follows:

Schedule 6, Part 4, Subpart J:		
	Taps, cocks, valves and similar devices, however operated, used to control the flow of liquids, gases or solids, all the foregoing and parts thereof:	
		Hand-operated and check, and parts thereof:

* * * * * * *

[1] Also referred to in the exhibits and record as "Baby Pig Valves," nipple valves, hog nipple waterers, etc.

680.66	Other	11% ad val.

Schedule 6, Part 4, Subpart C:

Subpart C headnote:

1. The provisions of item 666.00 for "agricultural and horticultural implements not specially provided for" do not apply to any of the articles provided for in schedule 6, part 2, part 3 (subparts A through F, inclusive) part 5 (except item 688.40), or part 6, or to any of the articles specially provided for elsewhere in the tariff schedules, but interchangeable agricultural and horticultural implements are classifiable in item 666.00 even if mounted at the time of importation on a tractor provided for in part 6B of this schedule.

666.00	Machinery for soil preparation and cultivation, agricultural drills and planters, fertilizer spreaders, harvesting and threshing machinery, hay or grass mowers (except lawn mowers), farm wagons and carts, milking machines, on-farm equipment for the handling or drying of agricultural or horticultural products, and agricultural and horticultural implements not specially provided for, and parts of any of the foregoing	Free

The record consists of the testimony of too witnesses called on behalf of plaintiff and receipt in evidence of eighteen exhibits on its behalf. Defendant offered, and there were received in evidence, seven exhibits.

Dr. Leland F. Tribble, a professor of animal science at Texas Tech University, was called on behalf of plaintiff. The witness testified that he received from the University of Missouri a bachelor of science degree in animal husbandry, a master of science degree in animal husbandry, and a doctor of philosophy in animal nutrition. His background included being a member of the faculties of the University of Missouri and Kansas State University, as well as doing research as a nonruminent nutritionist for the United States Department of Agriculture in Washington, D.C.

Dr. Tribble stated his entire career has been primarily in the area of nutrition and most of his work related to swine testing, and the production and management of swine. Based upon this experience the witness was familiar with the various types of systems used for watering swine. Basically there are three types of systems: Watering

in a trough, which has to be filled by the farmer, and the so-called automatic waterers consisting of the bowl-type waterer and the nipple-type waterer. The bowl-type waterer contains a float valve which is nose-operated and releases water in the bowl for drinking. Exhibit 1 was identified by Dr. Tribble as one type of bowl waterer. Exhibit 3, the imported merchandise, is representative of the nipple-type waterer.

Plaintiff's exhibit 4 is a drawing of plaintiff's exhibit 3. Dr. Tribble testified that the main components of the valve consist of items numbers one, six, eight, ten and twelve. Item number one of exhibit 4 is the valve body. Item number eight of exhibit 4 represents the passageway for the water to pass through the valve. Item number ten is the valve seat and number twelve is used to close the valve or stop the flow of water. In addition there is the actuator, which is number six.

According to Dr. Tribble the purpose of the valve is to control the flow of water, that is to open or close the valve which starts and stops the flow of water. In addition to the above components, there is the water tube which leads from the valve body and protects the actuator from being accidently actuated. The water tube is identified on exhibit 4 as item number 5, and the sloping section of the water tube is represented as item number fifteen. The main purpose of items five and fifteen is to allow the animal to actuate the valve by biting on the actuator, item 6, which permits the water to be delivered into the pig's mouth. In addition to the foregoing, the imported item has a water flow control, which is designated as item thirteen on exhibit 4, and which permits a certain amount of water to flow into the value. Item number fourteen is a filter which protects the valve from getting dirt in it. The filter is held in place by a filter holder, designated as item twenty. This total unit was considered by Dr. Tribble to be a nipple waterer of the so-called "bite" type since the pig has to bite on it to actuate it. Dr. Tribble has never know of this type of unit being called a valve.

Dr. Tribble has done research at Texas Tech University on a comparison of bowl-type and nipple-type waterers. The results of this research are contained in plaintiff's exhibit 9 at page 49 and plaintiff's exhibit 10 at page 41. The end result of these tests on an identical number of pigs in a pen, fed the identical food, resulted in a saving of one gallon of water a day per pen for those using the nipple waterer as against the bowl waterer. In addition, the nipple type waterer has the advantage of delivering clean water to the pig, whereas the bowl type waterer can accumulate the residue of food from the mouth of the pig as well as other contaminants. Accordingly, the nipple waterer has the advantage of cleanliness of supply. The witness

also indicated the nipple waterer is considerably cheaper than the bowl-type waterer.

Dr. Tribble stated the chief use of the imported merchandise is as an automatic hog waterer, and he was not aware of any other use for said item.

On cross-examination Dr. Tribble stated he did not consider a pigpen to function as a cage other than that they both confine the animal. While the witness indicated he had never heard of a device similar to exhibit 3 referred to as a valve or nipple valve, he stated he was familiar with the Lixit waterer. His attention was directed to magazine entitled "Pig American" received in evidence as defendant's exhibit A, and particularly to page 51 which contained an advertisement for the Lixit L–70 hog waterer, wherein it was referred to as a nipple valve for hogs. The witness was directed to defendant's exhibit C which depicted articles of the same class or kind as exhibit 3, wherein they were described as "Baby Pig Valve" and "Pig Valve."

On redirect examination Dr. Tribble testified that if someone referred to exhibit 3 as a valve, it would not be an accurate description of the device. The witness considered the use of the term "valve" as misleading.

Plaintiff then called Helmut Rader, the president of Monoflo International, Inc., the actual importer herein. The witness testified that Monoflo International is a business involved solely in manufacturing and/or importing watering devices for animals which he sells throughout the United States. The witness also indicated he exported over 50 percent of these items to other countries. His company imports both exhibits 1 and 3 which are devices which supply water to pigs. The witness personally designed hog waterers. He is presently involved in the manufacture, importation, sale, promotion and distribution of hog waterers in the United States. He presently imports model Nos. 10094 and 10095, which do not differ in design but are different in size. The larger type is used for pigs and the smaller one for piglets up to 25 pounds.

The functions of the watering tube, according to Mr. Rader, are twofold. One is to direct the water to the mouth of the animal and the other is to prevent the accidental operation of the valve actuator. In addition to the valve and watering tube, Mr. Rader testified that the imported item contains an actuator, a flow control and a filter screen. In the opinion of Mr. Rader the flow tube of exhibit 3 performs the same function as the bowl in exhibit 1, that is to permit the animal to obtain water.

Mr. Rader testified there are basically three channels of supply of hog waterers. The first channel is a farm equipment distributor, the second is a "builder of complete farms," and the third is the farmer.

The witness attends trade shows and advertises in papers and magazines. The major trade show is the Pork Congress. At the shows his company distributes brochures such as exhibit 13.

The witness stated that he had heard of devices such as exhibit 3 called valves, and he has in fact called them valves himself primarily since such term is utilized in England. Such items are also referred to as "nipples," "nozzles" and "water drinkers." In the opinion of Mr. Rader, exhibit 3 incorporates a valve as a component part but has other components. Accordingly, the witness stated the name "valve" is not descriptive of this item. Mr. Rader also testified that there is a big cost advantage of exhibit 3 over exhibit 1.

On cross-examination the witness testified that when Monoflo sells devices such as exhibit 3 there are package inserts, such as defendant's collective exhibit E contained therein. This literature is prepared in Canada but contains the name of Monoflo. The witness testified that exhibit E does not accurately reflect the merchandise since exhibit 3 does not contain a bracket as imported. The witness also admitted that exhibit C, which described the same class or kind of articles such as exhibit 3 as a "Baby Pig Valve," was distributed in the United States to Monoflo customers. He did not consider this advertising material to be misleading. The witness's attention was directed to exhibit F, which described the imported merchandise as "Monoflo—First Name in Hog Valves" and "Baby Pig Valve for High-Low Press." The valve in the instant importation, according to witness Rader, does not control the flow but merely permits the valve to be open or closed.

On redirect examination Mr. Rader testified that exhibit E was prepared in Canada by a Mr. Bauman, who is the manufacturer of the imported merchandise. The purpose of the literature was to familiarize the farmer with the drinker and its various parts.

The record as made herein establishes to the satisfaction of the court that the sole and, therefore, chief use of the imported merchandise is to supply water to hogs. The breeding and rearing of animals for the production of food (animal husbandry) constitutes for tariff purposes an agricultural pursuit. *United States* v. *Boker & Co.*, 6 Ct. Cust. Appls. 243, T.D. 35472 (1915). The court is likewise satisfied that the imported waterers are implements within the intendment of Congress. In *United States* v. *S.S. Perry*, 25 CCPA 282, T.D. 49395 (1938), the court held celluloid poultry leg bands, used for identification purposes, to be agricultural implements. The court reasoned, since the bands were not used for ornamental purpose but for the efficient raising of poultry, they are agricultural implements. Additionally, the *Perry* case enunciated the principle that Congress intended to encourage agriculture by affording free importation to

agricultural implements and that, therefore, the provision should be given broad and liberal construction. *See also Border Brokerage Co., Inc.* v. *United States*, 65 Cust. Ct. 277, C.D. 4089, 343 F. Supp. 1396 (1970), *aff'd*, 59 CCPA 151, C.A.D. 1058, 461 F. 2d 1383 (1972).

However, not every argicultural implement was intended by Congress to be afforded free entry since headnote 1, part 4C of schedule 6 provides an exclusion of "any of the articles specially provided for elsewhere in the tariff schedules * * *." A brief scanning of the TSUS also establishes a number of agricultural or horticultural tools, implements or machines were not intended to be entitled to free entry, i.e., lawnmowers, item 666.10, TSUS, certain cream separators, item 661.85, agricultural or horticultural hoes, rakes, item 648.55, and agricultural or horticultural forks, item 648.61.

Defendant, in any event, relying on headnote 1 of part 4C, schedule 5, contends the imported articles are valves or similar devices used to control the flow of liquids and, as such, are specifically provided for and, therefore, excluded from classification under item 666.00. Plaintiff contends the merchandise is "more than" a valve and, therefore, may properly be classified as an agricultural implement under item 666.00. It is the position of plaintiff that by virtue of three specific elements of the waterers—the flow restrictor, the filter screen, and the watering tube—the imported merchandise is no longer a valve. The diagram of the waterer in defendant's Exhibit E, set forth below, is of assistance in determining this theory.

Court No. 79-12-02021 Page 12

The component parts of the imported merchandise are as follows:

1. Valve body
2. O-ring seat
3. Valve stem
4. Spring
5. Orifice (flow restrictor)
6. Filter screen
7. Filter screen holder

A. Referred to in the testimony as the "watering tube."

The operation of the waterer is accomplished by the hog placing its mouth over the cutout portion of the valve body and biting down on the valve stem (3). This permits the water to pass through the filter which screens out any dirt, etc. and then pass directly into the mouth of the hog by means of the so-called watering tube (A). The flow restrictor is merely a thin piece of plastic with a small orifice which permits the amount of water that can pass through the orifice. There are various size restrictors which may be utilized depending upon the water pressure.

The "more than" doctrine was considered in *E. Green & Son (New York), Inc.* v. *United States*, 59 CCPA 31, C.A.D. 1032, 450 F. 2d 1396 (1971) wherein the court made the following observation:

> Only the most general of rules can be ascertained from the previous decisions dealing with the "more than" doctrine, and it appears that each case must in the final analysis be determined on its own facts. See *United Car Fastener Corp.* v. *United States*, 54 CCPA 89, C.D.A. 913 (1967), and the cases cited therein. In order to determine if an article is more than that provided for in a particular tariff provision, it is necessary to ascertain the common meaning of the tariff provision and compare it with the merchandise in issue. It is well established that in determining the common meaning of a term or word used in a tariff provision, court decisions, dictionary definitions, and other lexicographical authorities may be considered. [P. 34.]

The advice in *Green* was subsequently repeated in *The Englishtown Corporation* v. *United States*, 64 CCPA 84, C.A.D. 1187, 553 F. 2d 1258 (1977). Accordingly, the common meaning of the term must be determined and compared with the merchandise before the court. The record establishes, and the parties agree, the waterer contains a valve. By virtue of its operation, the fact that the valve is either open or closed, brings the valve involved within the category of a gate valve.

Webster's Third New International Dictionary (1965) contains the following definitions:

> *valve* * * * b (1): any of numerous mechanical devices by which the flow of liquid, air or other gas, or loose material in bulk may be started, stopped, or regulated by a movable part that opens, shuts, or partially obstructs one or more ports or passageways; also: the movable part of such a device—compare COCK 2; see CHECK VALVE, GATE VALVE, PISTON VALVE, SAFETY VALVE.
>
> *gate valve* n: a valve in a pipeline consisting essentially of a flat or wedge-shaped gate that can be lowered into a seat to seal off the line or raised into an external recess so that the full area of the line is open * * *

The *Summaries of Trade and Tariff Information* (1969), Schedule 6, Volume 10, describes gate valves, among others, at page 81, as follows:

> This summary relates to taps, cocks, valves, and similar devices and parts of the foregoing. These articles, which are used to control the flow of liquids, gases, and solids, may be operated by hand; by a motor, solenoid, or clock movement; or by a device such as a spring, counterweight, float, thermostat, pressure capsule, or electronic sensing device.
>
> * * * Common types of valves include gate valves globe and angle valves, check valves, and safety valves, which vary in design and in the metals of which they are constructed in accordance with the function to be performed. Gate valves are generally regarded as free-flow valves, i.e., they are usually completely open or completely closed, and are not normally intended for throttling or regulating the volume of material passing through a piping system.

Additionally at page 87 the following information is contained:

> * * * Imports entered under item 680.22 include such diverse articles as animal-cage watering valves, valves for irrigation systems, check valves for heat exchangers, and many different types of gate valves. * * *

The tariff provisions for valves cover hand-operated and automatic valves. The term "hand-operated" covers those valves which are not automatic. In the case at bar, while the valve is activated by the hog's mouth, it falls within the category of hand-operated as against automatic operation as indicated *supra*. It is clear based upon the foregoing that Congress intended to encompass within the provisions for taps, cocks, valves and similar devices those articles used to control the flow of liquids, etc. This is the primary and sole purpose of the imported merchandise. The formation of the so-called watering tube to *direct* the flow of water into the mouth of the hog does not differ, in the opinion of the court, from the spigot involved in the kitchen faucets involved in *Durst Industries, Inc.* v. *United States*, 73 Cust. Ct. 160, C.D. 4568 (1974) which also *directed* the flow of water.

The court is aware of the fact that plaintiff's exhibit 1, a hog bowl waterer, is permitted entry free of duty as an agricultural implement. However, examination of plaintiff's exhibit 1 and the merchandise before the court establishes the reason for the different classification, notwithstanding the fact they both perform the same function.

In view of the foregoing, it is unnecessary to consider defendant's alternative contention as "similar devices" or the other positions urged by both parties.

The claim of plaintiff is overruled. Judgment will be entered accordingly.

(Slip Op. 81-36)

SILVER REED AMERICA, INC., PLAINTIFF *v.* THE UNITED STATES, DEFENDANT, CONSUMER PRODUCTS DIVISION, SCM CORP., INTERVENOR

Court No. 80-6-00934

On Defendant's Motion for Protective Order and Intervenor's Cross-Motion for Disclosure

[Defendant's motion granted and intervenor's cross-motion denied.]

(Dated April 28, 1981)

Thomas S. Martin, Acting Assistant Attorney General (*David M. Cohen*, Director, Commercial Litigation Branch, and *Velta A. Melnbrencis*, Esq., on the briefs), for the defendant.

Eugene L. Stewart, Esq. (*Terence P. Stewart*, Esq., on the briefs), for the intervenor.

NEWMAN, Judge: In this action, plaintiff contests the final determination of sales at less than fair value by the United States Department of Commerce with regard to portable electric typewriters from Japan. Defendant has moved for a protective order asserting governmental privilege concerning a particular document which is included in the administrative record filed with the Court. Intervenor opposes defendant's motion and has filed a cross-motion for release of the document in its entirety, or alternatively, for discosure of certain portions thereof after an *in camera* inspection by the Court. Plaintiff has filed no response to either of the cross-motions.

According to defendant's memorandum in support of its motion and an attached affidavit by the then Secretary of Commerce, Philip M. Klutznick, claiming executive privilege, the document in question is a memorandum dated February 22, 1980 prepared by David Amerine (a staff attorney in the Office of the Assistant General Counsel for Import Administration) for John Greenwald, Deputy Assistant Secretary for Import Administration, United States Department of Commerce.[1] Secretary Klutznick's affidavit states that this internal agency communication contains a factual analysis and advisory opinions and recommendations concerning the calculation of the fair value of the merchandise included in the antidumping investigation, and reflects the staff attorney's exercise of his judgment as to what factual, legal and policy questions would be important to his superiors who

[1] This document was transmitted to the Court as part of Volume 11 of the administrative record. Also, the document is the subject of a motion for protective order in *Nakajima All Co., Ltd. v. United States, et al.*, Court No. 80-6-00933, which is the subject of a memorandum and order entered concurrently herewith. See 1 CIT —, Slip Op. 81-37 (April 28, 1981).

had the responsibility for making a final antidumping duty determination. The affidavit further avers that to the extent there is factual material in the document, the facts are so interwoven with the analytical portions that revealing the facts would reveal the analytical process and reflect the exercise of the staff attorney's judgment as to what facts would be important in arriving at the final decision. The Secretary then states that the disclosure of the document would seriously impede the free flow of essential advice and recommendations necessary for effective decision making.

In opposition to defendant's motion and in support of its cross-motion, intervenor asserts that it needs the document to know "the questions of fact and issues of law which were submitted to the Deputy Assistant Secretary for Import Administration for use by him in making his decision, so that intervenor can thus ascertain, in conjunction with the documents available in the public record and otherwise whether there is a reasonable indication that all material factual and legal issues presented in the administrative proceeding were analyzed by the staff and/or the Department prior to the final determination." Alternatively, intervenor requests that this Court "conduct an *in camera* inspection of the document at issue so that those portions of the document which set forth the questions of fact and issues of law can be separated from those portions which the Court determines should not be released."

Fundamentally, of course, the governmental privilege invoked by defendant here (which involves no military or state secrets) is not absolute, but qualified. *SCM Corporation* v. *United States* (*Brother International Corporation, Party-in-Interest*), 82 Cust. Ct. 351, C.R.D. 79-11, 473 F. Supp. 791 (1979); *Sprague Electric Company* v. *United States* (*Capar Components Corp., Party-in-Interest*), 81 Cust. Ct. 168, C.R.D. 78-18, 462 F. Supp. 966 (1978). "In all cases in which a protective order is sought, the courts must weigh the need for the materials sought against the potential harm that would result from their disclosure." *Roses, Inc.* v. *United States, et al.*, 1 CIT—, Slip Op. 81-4 (Jan. 12, 1981).

On balance, under the circumstances presented here, I have concluded that defendant's motion should be granted with respect to the entire document in question. It is noted that intervenor was granted leave to intervene for the purpose of defending the Government's final determination of less than fair value sales. No specific need has been demonstrated by intervenor for the particular document in dispute for the purpose of defending the Government's determination.

For the foregoing reasons, it is hereby ordered that:

1. Defendant's motion for a protective order is granted; and

2. Intervenor's cross-motion for release of all or a portion of the document is denied.

(Slip Op. 81-37)

NAKAJIMA ALL CO., LTD., PLAINTIFF *v.* THE UNITED STATES, DEFENDANT, CONSUMER PRODUCTS DIVISION, SCM CORP., INTERVENOR

Court No. 80-6-00933

On Defendant's Motion for Protective Order and Intervenor's Cross-Motion for Disclosure

[Defendant's motion granted; intervenor's and plaintiff's cross-motions denied.]

(Dated April 28, 1981)

Cabinet Hays (*Alan S. Hays* of counsel) and *Paul, Weiss, Rifkind, Wharton & Garrison* (*Harriet L. Goldberg* of counsel) for the plaintiff.

Thomas S. Martin, Acting Assistant Attorney General (*David M. Cohen*, Director, Commercial Litigation Branch, and *Velta A. Melnbrencis*, Esq., on the briefs), for the defendant.

Eugene L. Stewart, Esq. (*Terence P. Stewart*, Esq., on the briefs), for the intervenor.

NEWMAN, Judge: Invoking executive privilege in this action contesting the Government's antidumping duty determinations respecting portable electric typewriters from Japan, defendant seeks a protective order for two documents which are included in the administrative records transmitted to the Court. Intervenor opposes defendant's motion and has filed a cross-motion for release of the documents in their entirety, or alternatively, for disclosure of certain portions thereof after an *in camera* inspection by the Court. Plaintiff has filed a cross-motion stating that it does not oppose defendant's motion, but that if the Court makes the documents available to intervenor, then plaintiff requests that they be made equally available to plaintiff.

According to defendant's memorandum in support of its motion and an attached affidavit and claim of privilege by Bill Alberger, Chairman of the United States International Trade Commission, one document consists of a five page "pros and cons" statement dated April 16, 1980.[1] Chairman Alberger's affidavit states that the document was prepared by the Commission's staff solely for the internal

---

[1] Document numbered 40 on List No. 2, *Confidential Documents Transmitted to the United States Customs Court*, which is part of the administrative record transmitted to the Court in connection with U.S. International Trade Commission Investigation No. 73-TA-12 (Final): Portable Electric Typewriters from Japan.

use of the Commission in arriving at its determination in Investigation No. 731-TA-12 (Final) concerning portable electric typewriters from Japan; that it sets forth conclusions, considerations, deliberations, advice and recommendations; and that such document comprises part of the process by which the Commission's decisions are formulated.

According to defendant's memorandum in support of its motion and an attached affidavit by the then Secretary of Commerce, Philip M. Klutznick, claiming executive privilege, the second document in question is a memorandum dated February 22, 1980 prepared by David Amerine (a staff attorney in the Office of the Assistant General Counsel for Import Administration) for John Greenwald, Deputy Assistant Secretary for Import Administration, United States Department of Commerce.[2] Secretary Klutznick's affidavit states that this internal agency communication contains a factual analysis and advisory opinions and recommendations concerning the calculation of the fair value of the merchandise included in the antidumping investigation, and reflects the staff attorney's exercise of his judgment as to what factual, legal and policy questions would be important to his superiors who had the responsibility for making a final antidumping duty determination. The affidavit further avers that to the extent there is factual material in the document, the facts are so interwoven with the analytical portions that revealing the facts would reveal the analytical process and reflect the exercise of the staff attorney's judgment as to what facts would be important in arriving at the final decision. The Secretary then states that the disclosure of the document would seriously impede the free flow of essential advice and recommendations necessary for effective decision making.

In opposition to defendant's motion and in support of its cross-motion, intervenor asserts that it needs the document to know "the questions of fact and issues of law which were submitted to the Commissioners and to the Deputy Assistant Secretary for Import Administration, respectively, for use by them in making their decisions, so that intervenor can thus ascertain, in conjunction with the documents available in the public record and otherwise whether there is a reasonable indication that all material factual and legal issues presented in the administrative proceedings were analyzed by the

---

[2] This unnumbered document is contained in Volume 6 of the administrative record transmitted to the Court in connection with the Final Determination of Sales At Less Than Fair Value made by the United States Department of Commerce with regard to portable electric typewriters from Japan. This document was also transmitted to the Court as part of Volume 11 of the administrative record in *Silver Reed America, Inc.* v. *United States, et al.*, Court No. 80-6-00934, and is presently the subject of a motion for a protective order filed by defendant in that case. See 1 CIT —, Slip Op. 81-36 (April 28, 1981).

staff and/or the agencies prior to the final determination." Alternatively, intervenor requests that the Court "conduct an *in camera* inspection of the two documents at issue so that those portions of the documents which set forth the questions of fact and issues of law can be separated from those portions which the Court determines should not be released."

Fundamentally, of course. the governmental privilege invoked by defendant here (which involves no military or state secrets) is not absolute, but qualified. *SCM Corporation* v. *United States* (*Brother International Corporation, Party-in-Interest*), 82 Cust. Ct. 351, C.R.D. 79–11, 473 F. Supp. 791 (1979); *Sprague Electric Company* v. *United States* (*Capar Components Corp., Party-in-Interest*), 81 Cust. Ct. 168, C.R.D. 78–18, 462 F. Supp. 966 (1978). "In all cases in which a protective order is sought, the courts must weigh the need for the materials sought against the potential harm that would result from their disclosure." *Roses, Inc.* v. *United States, et al.*, 1 CIT—, Slip Op. 81–4 (Jan. 12, 1981).

In *SCM Corp.* v. *United States*; *Sprague Electric Co.* v. *United States; Henkel Corporation* v. *United States*, 85 Cust. Ct.—, C.R.D. 80–15 (1980); and *Asahi Chemical Industry, Ltd.* v. *United States*, 1 CIT—, Slip Op. 80–5 (Nov. 20, 1980), this Court upheld a claim of governmental privilege with regard to a "pros and cons" statement. Further, in *Silver Reed America, Inc.* v. *United States, et al.*, 1 CIT—, Slip Op. 81–36 (April 28, 1981), decided concurrently herewith, this Court sustained defendant's claim of privilege with respect to the Amerine memorandum of February 22, 1980 under virtually identical circumstances as are presented here.

On balance, under the circumstances presented here, I have concluded that defendant's motion should be granted with respect to both documents in their entirety. It is noted that intervenor was granted leave to intervene for the purpose of defending the challenged administrative determinations. No specific need has been demonstrated by intervenor for the particular documents in dispute for the purpose of defending the Government's determinations.

For the foregoing reasons, it is hereby ordered that:

1. Defendant's motion for a protective order is granted;
2. Intervenor's cross-motion for release of all or a portion of the documents is denied; and
3. Plaintiff's cross-motion is denied.

(Slip Op. 81–38)

HERAEUS-AMERSIL, INC., PLAINTIFF, v. UNITED STATES, DEFENDANT.

Court No. 81–3–00251

Order

(April 29, 1981)

FORD, Judge. Upon oral argument before this Court on April 29, 1981, on defendant's oral motion pursuant to Rule 62 (d) and (e), Rules of the United States Court of International Trade, for a stay of this Court's decision and judgment in *Heraeus-Amersil, Inc.* v. *United States*, 1 CIT —, Slip Op. 81–33 (April 24, 1981), pending appeal, upon plaintiff's response, and upon due deliberation, the Court having found that injuries to the revenues of the United States may outweigh any injury plaintiff will suffer pending resolution of this appeal, it is hereby

ORDERED, ADJUDGED, AND DECREED, that the effect of this Court's decision and judgment, published as Slip Op. 81–33, shall be stayed pending resolution of any and all appeals by defendant of this case; and it is further

ORDERED, ADJUDGED, AND DECREED that, for the life of this stay, the United States Customs Service may continue to collect duties, fees, charges, penalties, and exactions in accordance with the Regulations promulgated by the Secretary of the Treasury and procedures utilized heretofore.

Appearances:

Counsel for Plaintiff:

RICHARD C. KING, Esq.,
Fitch, King, & Caffentzis.

Counsel for Defendant:

THOMAS S. MARTIN,
Acting Assistant Attorney General.

JOSEPH I. LIEBMAN,
Attorney in Charge,
International Trade Field Office.

SAUL DAVIS,
Department of Justice, Civil Division,
Commercial Litigation Branch.

Decisions of the United States Court of International Trade

Abstracts

Abstracted Reappraisement Decisions

DEPARTMENT OF THE TREASURY, *May 4, 1981.*

The following abstracts of decisions of the United States Court of International Trade at New York are published for the information and guidance of officers of the customs and others concerned. Although the decisions are not of sufficient general interest to print in full, the summary herein given will be of assistance to customs officials in easily locating cases and tracing important facts.

WILLIAM T. ARCHEY,
Acting Commissioner of Customs.

DECISION NUMBER	JUDGE & DATE OF DECISION	PLAINTIFF	COURT NO.	BASIS OF VALUATION	HELD VALUE	BASIS	PORT OF ENTRY AND MERCHANDISE
R81/142	Re, C.J. April 29, 1981	Amerex Trading Corp.	78-2-00352, etc.	Export value	Appraised values shown on entry papers less additions included to reflect currency revaluation	C.B.S. Imports Corp. v. U.S. (C.D. 4739)	New York Miscellaneous articles
R81/143	Re, C.J. April 29, 1981	Casi Designs Limited	76-11-02558, etc.	Export value	Appraised values shown on entry papers less additions included to reflect currency revaluation	C.B.S. Imports Corp. v. U.S. (C.D. 4739)	New York Miscellaneous articles
R81/144	Re, C.J. April 29, 1981	N. Erlanger-Blumgart & Co., Inc.	73-11-03166, etc.	Export value	Appraised values shown on entry papers less additions included to reflect currency revaluation	C.B.S. Imports Corp. v. U.S. (C.D. 4739)	New York Miscellaneous articles
R81/145	Re, C.J. April 29, 1981	Ben Goodman & Son Co., Inc.	73-6-01624, etc.	Export value	Appraised values shown on entry papers less additions included to reflect currency revaluation	C.B.S. Imports Corp. v. U.S. (C.D. 4739)	New York Miscellaneous articles
R81/151	Re, C.J. April 30, 1981	C. Itoh & Co. (America) Inc.	78-10-01856, etc.	Export value	Appraised values shown on entry papers less additions included to reflect currency revaluation	C.B.S. Imports Corp. v. U.S. (C.D. 4739)	Philadelphia Miscellaneous articles

DECISION NUMBER	JUDGE & DATE OF DECISION	PLAINTIFF	COURT NO.	BASIS OF VALUATION	HELD VALUE	BASIS	PORT OF ENTRY AND MERCHANDISE
R81/152	Re, C.J. April 30, 1981	Mitsubishi International Corp.	74-1-00022, etc.	Export value	Appraised values shown on entry papers less additions included to reflect currency revaluation	C.B.S. Imports Corp. v. U.S. (C.D. 4739)	New York Miscellaneous articles
R81/153	Re, C.J. April 30, 1981	Mitsubishi International Corp.	75-11-02799 etc.	Export value	Appraised values shown on entry papers less additions included to reflect currency revaluation	C.B.S. Imports Corp. v. U.S. (C.D. 4739)	Chicago Miscellaneous articles
R81/154	Re, C.J. April 30, 1981	Sigallo, Ltd.	76-8-01950, etc.	Export value	Appraised values shown on entry papers less additions included to reflect currency revaluation	C.B.S. Imports Corp. v. U.S. (C.D. 4739)	New York Miscellaneous articles
R81/146	Re, C.J. April 29, 1981	C. Itoh & Co. (America) Inc.	76-3-00793, etc.	Export value	Appraised values shown on entry papers less additions included to reflect currency revaluation	C.B.S. Imports Corp. v. U.S. (C.D. 4739)	New York Miscellaneous articles
R81/147	Re, C.J. April 30, 1981	Fehr Bros., Inc.	73-10-02759, etc.	Export value	Appraised values shown on entry papers less additions included to reflect currency revaluation	C.B.S. Imports Corp. v. U.S. (C.D. 4739)	New York Miscellaneous articles

R81/148	Re, C.J. April 30, 1981	First Chemical Products, Inc.	73-7-01672-S, etc.	American selling price	$8.50 per kilogram, net, packed	Agreed statement of facts	New York Sulfamethazine U.S.P. grade
R81/149	Re, C.J. April 30, 1981	First Chemical Products, Inc.	77-7-01227	American selling price	$8.50 per kilogram, net, packed	Agreed statement of facts	New York Sulfamethazine U.S.P. grade
R81/150	Re, C.J. April 30, 1981	Grayblock Ribbon Co.	74-10-02840	Export value	Appraised values shown on entry papers less additions included to reflect currency revaluation	C.B.S. Imports Corp. v. U.S. (C.D. 4739)	New York Miscellaneous articles
R81/155	Re, C.J. April 30, 1981	Spartans Industries, Div. of Arlen Realty & Develop. Corp.	76-10-02371	Export value	Appraised values shown on entry papers less additions included to reflect currency revaluation	C.B.S. Imports Corp. v. U.S. (C.D. 4739)	New York Miscellaneous articles
R81/156	Re, C.J. April 30, 1981	Gamin Sportswear Co., Inc.	78-5-00928	Export value	Invoice unit prices less the quota charge of $7.30 per dozen, net packed	Agreed statement of facts	New York Women's woven cotton pants

Judgment of the U.S. Court of International Trade in Appealed Case

May 1, 1981

APPEAL 80-34.—United States *v.* Sanyo Electric, Inc.—POWER FAILURE LIGHTS—FLASHLIGHTS—ELECTRICAL ARTICLES—TSUS.—C.D. 4855 affirmed March 5, 1981 (C.A.D. 1258).

Appeal to U.S. Court of Customs and Patent Appeals

APPEAL 81–16.—The De Laval Separator Company *v.* The United States—STAINLESS STEEL FARM TANK WITHOUT REFRIGERATION UNIT—BULK COOLERS—REFRIGERATORS AND REFRIGERATION EQUIPMENT—SUMMARY JUDGMENT—TSUS—Appeal from Slip Op. 81–12.

The merchandise described on the invoices in this case as "Farm tanks without Refrigeration Units," was assessed duty at 6% ad valorem under Item 661.35, and at 10% ad valorem under Item 948.00 of the Tariff Schedules of the United States, and classified as "Refrigerators and refrigerating equipment whether or not electric, and parts thereof."

Plaintiff-appellant claims that the merchandise is properly free of duty under Item 666.00 of the Tariff Schedules of the United States as "machinery for soil preparation and cultivation, agricultural drills and planters, fertilizer spreaders, harvesting and threshing machinery, hay or grass mowers (except lawn mowers), farm wagons and carts, milking machines, on-farm equipment for the handling or drying of agricultural or horticultural products, and agricultural and horticultural implements not specially provided for, and parts of any of the foregoing." Plaintiff-appellant further claims that the farm tanks are not refrigerators, nor are they refrigerating equipment; that the farm tanks are used exclusively for sanitary handling and storage of milk; that the farm tanks are an essential item of equipment in the production and handling of whole milk on the farm; that the farm tanks are provided with means of receiving, cooling, measuring, inspecting and taking samples of the milk contained therein; that the farm tanks are provided with the means of agitating the milk to insure homogeneity for a uniform butterfat content, and for dispensing the milk into a bulk pickup truck; that the farm tanks are fitted with a thermometer for monitoring the temperature of the contents, and with the means for automatic cleaning of the interior, to ensure that the milk is held in a sanitary condition; that the characteristics and features of the farm tanks are required by law if used in the State of New York and elsewhere, and are requisites for approval by the

United States Health Service; that the characteristics and features of the farm tanks are essential to the design, fabrication, construction, maintenance and use thereof.

The merchandise, *supra*, was originally the subject of a decision in *The De Laval Separator Company* v. *The United States* (*De Laval* 1), 78 Cust. Ct. 95, C.D. 4693, 434 F. Supp. 656 (1977, *rev'd*, 65 CCPA 48, C.A.D. 1204, 569 F. 2d 1134 (1978), *reh. den.* April 27, 1978. The record in *De Laval* 1 was incorporated herein.

In an action filed in the United States Court of International Trade, plaintiff-appellant requests the Court to sustain the protest, to render judgment accordingly, to find that the farm tanks are properly free of duty under Item 660.00, to order the District Director of Customs at Detroit, Michigan, to reliquidate the entry, and grant such other relief and further relief as the Court shall find appropriate. Defendant-appellee submitted to the Court a motion for summary judgment. The motion for summary judgment was granted by the Court.

Plaintiff-appellant, being dissatisfied with the decision and judgment of the United States Court of International Trade, appeals the case to the United States Court of Customs and Patent Appeals. In its appeal, plaintiff-appellant contends that the United States Court of International Trade erred in granting defendant-appellee's motion for summary judgment, and further erred in entering judgment dismissing the action. Plaintiff-appellant seeks review pursuant to the provisions of 1541(a), 2601(a), and 2601(b) of Title 28, United States Code, and to that end requests the Court to issue such orders and grant such relief as the statutes provide and as the Court shall seem just.

International Trade Commission Notices

Investigations by the United States International Trade Commission

DEPARTMENT OF THE TREASURY, MAY 14, 1981

The appended notices relating to investigations by the United States International Trade Commission are published for the information of Customs Officers and others concerned.

R. E. CHASEN,
Commissioner of Customs.

In the Matter of CERTAIN COIN-OPERATED AUDIO-VISUAL GAMES AND COMPONENTS THEREOF	Investigation No. 337–TA–87

Notice of Request for Further Briefing

AGENCY: U.S. International Trade Commission.

ACTION: Commission request for further briefing by the parties and other interested persons.

SUMMARY: The Commission is requesting further briefing on certain copyright issues in this case.

SUPPLEMENTARY INFORMATION: This investigation is being conducted under section 337 of the Tariff Act of 1930 (19 U.S.C. § 1337) and concerns alleged unfair trade practices in the importation into and sale in the United States of certain coin-operated audio-visual games and components thereof. The Commission is requesting further briefing by the parties and other interested persons on the issue of whether the complainant, Midway Manufacturing Co., has an enforceable copyright in its Galaxian game or in any of the components thereof. The parties and other interested persons are requested to file written briefs on the issue no later than May 18, 1981.

Copies of all non-confidential documents filed in connection with this investigation are available for inspection during official business hours (8:45 a.m. to 5:15 p.m.) in the Office of the Secretary, U.S. International Trade Commission, 701 E Street NW., Washington, D.C. 20436, telephone 202–523–0155.

FOR FURTHER INFORMATION CONTACT: Clarease E. Mitchell, Esq., Office of the General Counsel, telephone 202-523-0148.

By order of the Commission.

Issued: May 1, 1981.

KENNETH R. MASON,
Secretary.

In the Matter of CERTAIN APPARATUS FOR THE CONTINUOUS PRODUCTION OF COPPER ROD	Investigation No. 337-TA-89

Advice to the U.S. Customs Service Regarding Return of Posted Bond and Noncollection of Future Bond

AGENCY: U.S. International Trade Commission.

ACTION: Advice to U.S. Customs Service regarding return of posted bond and non-collection of future bond.

SUMMARY: On April 30, 1981, the Commission advised the U.S. Customs Service that (1) there is no reason to continue to collect the 100% bond on future importations of the apparatus in question and (2) the bond which has been collected for past importations should be returned.

SUPPLEMENTARY INFORMATION: On October 29, 1980, the U.S. International Trade Commission issued a temporary exclusion order (TEO) in the above-captioned investigation. The TEO excluded any rolling mill described by claims 7, 9, 11, or 12 of U.S. Letters Patent 4,129,179 and components of such rolling mills, until a final determination under section 337 of the Tariff Act of 1930 (19 U.S.C. 1337) in this investigation. The articles ordered to be excluded were entitled to entry under bond of 100 percent ad valorem, however.

On April 10, 1981, respondents Krupp G.m.b.H. and Krupp International Inc. and complainant Southwire Co. entered in a settlement agreement that could have the effect of terminating this investigation. All of the parties to the investigation filed a joint motion on April 17, 1981, to (1) effect return of the bond which has been posted in compliance with the temporary exclusion order (TEO) of October 29, 1980, and (2) remove the requirement for collection of further bond on future importations. The parties explicitly stated that they are not asking to vacate or otherwise modify the TEO, however.

The Commission's advice to the Customs Service, in the form of a letter from the Commission Chairman to the Commissioner of Customs, is available for public inspection in the Office of the Secretary, U.S. International Trade Commission, 701 E Street, N.W., Washington, D.C. 20436, telephone 202–523–0161.

FOR FURTHER INFORMATION CONTACT: Jeffery Neeley Esq., Office of the General Counsel, U.S. International Trade Commission, 701 E Street, N.W., Washington, D.C. 20436, telephone 202–523–0359.

By order of the Commission.

Issued: May 1, 1981.

KENNETH R. MASON,
Secretary.

In the Matter of
CERTAIN MOLDED-IN SANDWICH PANEL INSERTS AND METHODS FOR THEIR INSTALLATION } Investigation No. 337–TA–99

Order No. 1

Pursuant to my authority as Chief Administrative Law Judge of this Commission, I hereby designate Administrative Law Judge Donald K. Duvall as Presiding Officer in this investigation.

The Secretary shall serve a copy of this order upon all parties of record and shall publish it in the Federal Register.

Issued: May 6, 1981.

DONALD K. DUVALL,
Chief Administrative Law Judge.

In the Matter of
CERTAIN SPRING ASSEMBLIES AND COMPONENTS THEREOF, AND METHODS FOR THEIR MANUFACTURE } Investigation No. 337–TA–88

Commission Hearing on the Presiding Officer's Recommendation and on Relief, Bonding, and the Public Interest, and the Schedule for Filing Written Submissions

AGENCY: U.S. International Trade Commission.

ACTION: The scheduling of oral arguments and briefing in investigation No. 337–TA–88, Certain Spring Assemblies and Components Thereof, and Methods for Their Manufacture.

Notice is hereby given that the presiding officer has issued a recommended determination that there is a violation of section 337 of the Tariff Act of 1930, 19 U.S.C. § 1337, in the unauthorized importation into the United States and sale of certain spring assemblies that are the subject of the Commission's investigation. Accordingly, the recommended determination and the record of the hearing have been certified to the Commission for review and a Commission determination. Interested persons may obtain copies of the nonconfidential version of the presiding officer's recommendation (and all other public documents on the record of the investigation) by contacting the Office of the Secretary, U.S. International Trade Commission, 701 E Street NW., Room 161, Washington, D.C. 20436, telephone 202–523–0161.

COMMISSION HEARING: The Commission will hold a public hearing on June 10, 1981, in the Commission's Hearing Room 701 E Street NW., Washington, D.C. 20436, beginning at 10:00 a.m. The hearing will be divided into two parts. First, the Commission will hear oral arguments on the presiding officer's recommended determination that a violation of section 337 of the Tariff Act of 1930 exists. Second, the Commission will hear presentations concerning appropriate relief, the effect that such relief would have upon the public interest, and the proper amount of the bond during the Presidential review period, in the event that the Commission determines that there is a violation of section 337 and that relief should be granted. These matters will be heard on the same day in order to facilitate the completion of this investigation within time limits established under law and to minimize the burden of this hearing upon the parites.

ORAL ARGUMENTS: Any party to the Commission's investigation or any interested Government agency may present an oral argument concerning the presiding officer's recommended determination. Such arguments will be limited to 20 minutes (exclusive of time consumed by questions from the Commission or its advisory staff), unless the parties make a timely request for additional time for making their arguments based on a showing of need. This time may be used in any way the party or agency making argument sees fit, i.e., a portion of the time may be reserved for rebuttal or devoted to summation. The oral arguments will be held in the following order: complainant, respondents, Government agencies, and the Commission investigative attorney. Any rebuttals will be held in this order: respondents, complainant, Government agencies, and the Commission investigative attorney. Persons making oral argument are reminded that such argument must be based upon the evidentiary record certified to the Commission by the presiding officer.

ORAL PRESENTATIONS ON RELIEF, BONDING, AND THE PUBLIC INTEREST: If the Commission finds that a violation of section 337 has occurred, it may issue (1) an order which could result in the exclusion of the subject articles from entry into the United States and/or (2) an order which could result in one or more respondents being required to cease and desist from engaging in unfair methods of competition or unfair acts in the importation and sale of such articles. Accordingly, the Commission is interested in hearing presentations which address the form of relief, if any, which should be ordered.

If the Commission finds that a violation of section 337 has occurred and orders some form of relief, the President has 60 days to approve or disapprove the Commission's action. During this period, the subject articles would be entitled to enter the United States under a bond in an amount determined by the Commission and prescribed by the Secretary of the Treasury. The Commission is therefore interested in hearing presentations concerning the amount of the bond, if any, which should be imposed.

If the Commission concludes that a violation of section 337 has occurred and contemplates some form of relief, it must consider the effect of that relief upon the public interest. The factors which the Commission will consider include the effect that an exclusion order and/or a cease and desist order would have upon (1) the public health and welfare, (2) competitive conditions in the U.S. economy, (3) the U.S. production of articles which are like or directly competitive with those which are the subject of the investigation, and (4) U.S. consumers.

Following the oral arguments on the presiding officer's recommendation, parties to the investigation, Government agencies, public-interest groups, and interested members of the public may make oral presentations on the issues of relief, bonding, and the public interest. Such presentations will be limited to 10 minutes (exclusive of time consumed by questions from the Commission and its advisory staff) and may include the testimony of witnesses. This portion of the hearing is legislative in nature; presentations need not be confined to the evidentiary record certified to the Commission by the presiding officer. Oral presentations on relief, bonding, and the public interest will be heard in the same order as oral arguments on the recommended determination.

WRITTEN SUBMISSIONS: In order to give greater focus to the hearing, the parties to the investigation, Government agencies, and the Commission investigative attorney are encouraged to file briefs on the issues of violation (to the extent they have not already briefed

that issue in their written exceptions to the presiding officer's recommended determination), remedy, bonding, and the public interest. Briefs must be filed not later than the close of business on May 27, 1981. During the course of the hearing, the parties may be asked to file posthearing briefs.

NOTICE OF APPEARANCE: Written requests to appear at the Commission hearing must be filed with the Office of the Secretary by May 27, 1981.

ADDITIONAL INFORMATION: The original copy and 11 true copies of all briefs must be filed with the Office of the Secretary not later than May 27, 1981. Any person desiring to discuss confidential information, or to submit a document (or a portion thereof) to the Commission in confidence, must request in camera treatment unless the information has already been granted such treatment by the presiding officer. All such requests should be directed to the Secretary to the Commission and must include a full statement of the reasons why the Commission should grant such treatment. Documents or arguments containing confidential information approved by the Commission for in camera treatment will be treated accordingly. All nonconfidential written submissions will be available for public inspection at the Secretary's Office.

Notice of this investigation was published in the Federal Register of August 8, 1980.

FOR FURTHER INFORMATION CONTACT: Jane Albrecht, Esq., Office of the General Counsel, U.S. International Trade Commission, telephone 202-523-1627.

By order of the Commission.

Issued: May 7, 1981.

KENNETH R. MASON,
Secretary.

Index

U.S. Customs Service

Treasury Decisions:
- American Manufacturers Petition-Decision: Speedometers and odometers used on exercisers 81-127
- Carrier Bond 81-137
- Cotton and Manmade Fiber Textile Products/Restriction on Entry:
  - Brazil, China, Colombia, Haiti, Hong Kong, India, Indonesia, Korea, Macau, Malaysia, Pakistan, Philippines, Singapore and Sri Lanka 81-129
  - Sri Lanka 81-136
  - Haiti 81-140
- Cotton Textile Products/Restriction on Entry:
  - Pakistan 81-142
  - Brazil 81-139
- Cotton, Wool and Manmade Fiber Textile Products/Restriction on Entry:
  - Macau 81-128
  - Thailand 81-131
  - India 81-132
  - Taiwan 81-133
  - Republic of Korea 81-134
  - Republic of the Philippines 81-135
- Manmade Fiber Textile Products/Restriction on Entry: Haiti 81-130
- Wool and Manmade Fiber Textile Products/Restriction on Entry: Romania 81-141
- Wool Textile Products/Restriction on Entry:
  - People's Republic of China 81-138
  - Republic of the Philippines 81-143
- Foreign Currencies:
  - Variances from Quarterly Rate: April 27-May 1, 1981 81-144
  - Daily Certified Rate: April 27-May 1, 1981 81-145

DEPARTMENT OF THE TREASURY
U.S. CUSTOMS SERVICE
WASHINGTON, D.C. 20229

OFFICIAL BUSINESS
PENALTY FOR PRIVATE USE, $300

POSTAGE AND FEES PAID
DEPARTMENT OF THE TREASURY (CUSTOMS)
(TREAS. 552)

U.S.MAIL

U.S. GOVERNMENT PRINTING OFFICE : 1981

best copy available

15/22

Customs Bulletin

Regulations, Rulings, Decisions, and Notices concerning Customs and related matters

and Decisions

of the United States Court of Customs and Patent Appeals and the United States Court of International Trade

NEWARK PUBLIC LIBRARY

Vol. 15 JUNE 3, 1981 No. 22

AUG 10 1981

U. S. GOVT. PUBS.
DEPOSITORY 376

This issue contains

T.D. 81-146 through 81-155
C.S.D. 81-101 through 81-120
Investigation No. 337-TA-56
Slip Op. 81-39 through 81-41
Protest Abstracts P81/58 through P81/60
Reap. Abstracts R81/157 through R81/167
International Trade Commission Notices

THE DEPARTMENT OF THE TREASURY
U.S. Customs Service

T1.11/3:

NOTICE

The abstracts, rulings, and notices which are issued weekly by the U.S. Customs Service are subject to correction for typographical or other printing errors. Users may notify the U.S. Customs Service, Logistics Management Division, Washington, D.C. 20229, of any such errors in order that corrections may be made before the bound volumes are published.

For sale by the Superintendent of Documents, U.S. Government Printing Office, Washington, D.C. 20402. Price: $2.25 (single copy domestic); $2.85 (single copy foreign). Subscription price: $85.00 a year domestic; $106.25 a year foreign.

U.S. Customs Service

Treasury Decisions

(T.D. 81-146)

Bonds

Approval and discontinuance of carrier's bonds, Customs Form 3587.

Bonds of carriers for the transportation of bonded merchandise have been approved or discontinued as shown below. The symbol "D" indicates that the bond previously outstanding has been discontinued on the month, day, and year represented by the figures which follow. "PB" refers to a previous bond, dated as represented by figures in parentheses immediately following, which has been discontinued. If the previous bond was in the name of a different company or if the surety was different, the information is shown in a footnote at the end of the list.

Dated: May 14, 1981.

Name of principal and surety	Date of bond	Date of approval	Filed with district director/area director/amount
A. A. Martin Transportation Co., Inc., 28 Damrell St., Boston, MA; motor carrier; Hartford Accident & Indemnity Co. D 3/24/81	July 28, 1977	July 28, 1977	Boston, MA $25,000
CSI Trucking, Inc., 4242 Southwest Freeway, Houston, TX: contract carrier; Old Republic Ins. Co.	Dec. 8, 1980	Dec. 10, 1980	New Orleans, LA $50,000
Canton Railroad Co., 401 E. Pratt St., World Trade Center, Baltimore, MD; rail carrier; Federal Ins. Co. (PB 10/8/74) D 2/28/81 [1]	Feb. 6, 1981	Feb. 28, 1981	Baltimore, MD $100,000
Dahill Cartage Co., Inc., 301 Central Ave., Bethpage, NY; motor carrier; Peerless Ins. Co. D 3/22/81	June 3, 1977	June 15, 1977	New York Seaport $25,000
The Dulles International Express, Dulles International Airport, P.O. Box 17344, Cargo Bay-80 Wash., D.C.; motor carrier; American Motorists Ins. Co.	Mar. 18, 1981	Mar. 25, 1981	Washington, DC $25,000
E.C. Transfer Corp., 4737 N.W. 72nd Ave., Miami, Fla.; motor carrier; Fidelity & Deposit Co. of Md.	Aug. 30, 1980	Mar. 26, 1981	Miami, FL $25,000

Footnote at end of table.

Name of principal and surety	Date of bond	Date of approval	Filed with district director/area director/amount
Edwards Trucking, Inc., P.O. Drawer 428, Hemingway, SC; motor carrier; Liberty Mutual Ins. Co. D 3/13/81	Jan. 30, 1979	Feb. 9, 1979	Charleston, SC $25,000
Frederick Transport Ltd., R.R. #6, Chatham, Ontario, Canada; motor carrier; Hartford Fire Ins. Co. (PB 3/21/80) D 3/11/81 [3]	Feb. 5, 1981	Mar. 11, 1981	Detroit, MI $50,000
Inland Transportation Co. Inc., 6737 Corson Ave., S., Seattle, WA; motor carrier; Safeco Ins. Co. of America (PB 1/22/75) D 1/21/81 [3]	Jan. 5, 1981	Jan. 21, 1981	Seattle, WA $25,000
International Transport, Inc., 2450 Marion Rd., S.E., Rochester, MN; motor carrier; Ins. Co. of North America (PB 9/1/79) D 9/1/80 [4]	Sept. 1, 1980	Sept. 1, 1980	Minneapolis, MN $100,000
Kro-Flite Cartage Co., 11500 W. Burleigh Rd., Milwaukee, WI; motor carrier; United States Fire Ins. Co.	Feb. 26, 1981	Mar. 11, 1981	Milwaukee, WI $25,000
L.R. Trucking, Inc., 59 Norfolk Ave., Roxbury, MA; motor carrier; The Aetna Casualty & Surety Co. D 3/13/81	Jan. 5, 1976	July 26, 1976	Boston, MA $25,000
LTD Air Cargo, Inc., P.O.B. 30132, Memphis Int'l Airport, Memphis, TN; air carrier; Fidelity & Deposit Co. of MD.	Feb. 23, 1981	Mar. 18, 1981	New Orleans, LA $25,000
M & H Brokerage Inc., P.O.B. 522-912, Miami, Fla.; motor carrier; St. Paul Fire & Marine Ins. Co.	Mar. 18, 1981	Mar. 23, 1981	Miami, FL $25,000
Missie, Inc., 3400 McIntosh Rd., P.O.B. 13101, Fort Lauderdale, Fla.; motor carrier; St. Paul Fire & Marine Ins. Co.	Feb. 11, 1981	Mar. 20, 1981	Miami, FL $50,000
George L. Morrow Trucking Co., Inc., P.O.B. 916 (429 N. 7th St.), Raymondville, TX: motor carrier; Fidelity & Deposit Co. of MD.	Oct. 20, 1980	Mar. 19, 1981	Laredo, TX $25,000
National Retail Transportation, Inc., 10 E. Oregon Ave., Bldg. A, Phila., PA; contract carrier; Aetna Casualty & Surety Co.	Nov. 10, 1980	Mar. 11, 1981	Philadelphia, PA $50,000
Richard Novigrod, 805 N. Cage Blvd., Pharr, TX; motor carrier; Lawyers Surety Corp.	Nov. 25, 1980	Mar. 25, 1981	Laredo, TX $25,000
Ricketts Trucking Ltd., 1001 W. Magnolia, Phoenix, AZ; motor carrier; Transamerica Ins. Co. (PB 3/11/75) D 3/11/81 [3]	Mar. 11, 1981	Mar. 11, 1981	Nogales, AZ $25,000
Saenz Brothers Trucking & Tomato Co., Inc., 1500 S. Zarzamora-249, San Antonio, TX; motor carrier; Aetna Casualty & Surety Co. (PB 8/13/78) D 3/17/81 [3]	Feb. 18, 1981	Mar. 17, 1981	Laredo, TX $25,000
San Diego & Arizona Eastern Transportation Co., 520 E. St., Suite 1001, San Diego, CA; rail carrier; The American Ins. Co.	Mar. 10, 1981	Mar. 19, 1981	San Diego, CA $50,000

Name of principal and surety	Date of bond	Date of approval	Filed with district director/area director/amount
Seawheels, Inc., 1076 Harrisburg Pike, Carlisle, PA; motor carrier; Washington International Ins. Co. (PB 12/1/76) D 2/10/81 [7]	Jan. 22, 1981	Feb. 10, 1981	Baltimore, MD $50,000
Transmodal, Inc., 785 Principal St., Cowansville, P.Q., Canada; motor carrier; Transamerica Ins. Co.	Oct. 21, 1980	Apr. 2, 1981	St. Albans, VT $25,000

[1] Surety is Insurance Co. of North America.
[2] Surety is Lawyers Surety Corp.
[3] Surety is Firemen's Ins. Co. of Newark, N.J.
[4] Surety is American Motorists Ins. Co.
[5] Principal is Ricketts Trucking Co.; Surety is St. Paul Fire & Marine Ins. Co.
[6] Surety is National Surety Corp.
[7] Surety is Protective Ins. Co.

BON-3-03

MARILYN G. MORRISON,
Director,
Carriers, Drawback and Bonds Division.

(T.D. 81-147)

Cotton and Manmade Fiber Textile Products—Restriction on Entry

Restriction on entry of cotton and manmade fiber textile products manufactured or produced in Haiti

There is published below a directive of April 28, 1981, received by the Commissioner of Customs from the Chairman, Committee for the Implementation of Textile Agreements, concerning restriction on entry of cotton and manmade fiber textile products in certain categories manufactured or produced in Haiti.

This directive was published in the Federal Register on May 1, 1981 (46 FR 24617), by the committee.

(QUO-2-1)

Dated: May 19, 1981.

RICHARD R. ROSETTIE,
Acting Director,
Duty Assessment Division.

U.S. DEPARTMENT OF COMMERCE,
INTERNATIONAL TRADE ADMINISTRATION,
Washington, D.C., April 28, 1981.

Committee for the Implementation of Textile Agreements

COMMISSIONER OF CUSTOMS,
Department of the Treasury,
Washington, D.C.

DEAR MR. COMMISSIONER: Under the terms of the Arrangement Regarding International Trade in Textiles done at Geneva on December 20, 1973, as extended December 15, 1977; pursuant to the Bilateral Cotton, Wool and Man-Made Fiber Textile Agreement of August 17, 1979, between the Governments of the United States and Haiti; and in accordance with the provisions of Executive Order 11651 of March 3, 1972, as amended by Executive Order 11951 of January 6, 1977, you are directed to prohibit, effective on May 1, 1981 and for the twelve-month period extending through April 30, 1982, entry into the United States for consumption and withdrawal from warehouse for consumption of cotton and man-made fiber textile products in Categories 337, 349/649, 635, and 652, produced or manufactured in Haiti, in excess of the following levels of restraint:

Category	*12-mo level of restraint*
337	98,003 dozen
349/649	1,168,819 dozen
635	149,697 dozen
652	500,000 dozen

In carrying out this directive, entries of textile products in the foregoing categories which have been exported to the United States on and after May 1, 1980 and extending through April 30, 1981, shall, to the extent of any unfilled balances, be charged against the levels of restraints established for such goods during the twelve-month period which began on May 1, 1980 and extended through April 30, 1981. In the event that the levels of restraint established for that period have been exhausted by previous entries, such goods shall be subject to the levels set forth in this letter.

The levels of restraint set forth above are subject to adjustment pursuant to the provisions of the bilateral agreement of August 17, 1979, between the Governments of the United States and Haiti which provide, in part, that: (1) for the second and third agreement years, each specific limit shall be increased by seven percent annually, except Cat. 349/649; (2) any specific ceiling may be exceeded in any agreement year by not more than seven percent of its square yards

equivalent total, provided that the amount of the increase is compensated for by an equivalent decrease in one or more specific limits; (3) specific limits may also be increased for carryover and carryforward up to 11 percent of the applicable category limit; and (4) administrative arrangements or adjustments may be made to resolve minor problems arising in the implementation of the agreement. Any appropriate future adjustments under the foregoing provisions of the bilateral agreement will be made to you by letter.

A detailed description of the textile categories in terms of T.S.U.S.A. numbers was published in the Federal Register on February 28, 1980 (F.R. 13172), as amended on April 23, 1980 (45 F.R. 27463), August 12, 1980 (45 F.R. 53506) and December 24, 1980 (45 F.R. 85142).

In carrying out the above directions, entry into the United States for consumption shall be construed to include entry for consumption into the Commonwealth of Puerto Rico.

The actions taken with respect to the Government of Haiti and with respect to imports of cotton and man-made fiber textile products from Haiti have been determined by the Committee for the Implementation of Textile Agreements to involve foreign affairs functions of the United States. Therefore, the directions to the Commissioner of Customs, which are necessary for the implementation of such actions, fall within the foreign affairs exception to the rule-making provisions of 5 U.S.C. 553. This letter will be published in the Federal Register.

Sincerely,

PAUL T. O'DAY,
Chairman, Committee for the
Implementation of Textile Agreements.

(T.D. 81-148)

Cotton and Manmade Fiber Textile Products—Restriction on Entry

Restriction on entry of cotton and manmade fiber textile products manufactured or produced in the Dominican Republic

There is published below a directive of April 24, 1981, received by the Commissioner of Customs from the Chairman, Committee for the Implementation of Textile Agreements, concerning restriction on entry of cotton and manmade fiber textile products in certain categories manufactured or produced in the Dominican Republic. This directive amends, but does not cancel, that Committee's directive of May 30, 1980 (T.D. 80-174).

This directive was published in the Federal Register on April 29, 1981 (46 FR 23966), by the Committee.

(QUO-2-1)

Dated: May 19, 1981.

RICHARD R. ROSETTIE,
Acting Director,
Duty Assessment Division.

U.S. DEPARTMENT OF COMMERCE,
INTERNATIONAL TRADE ADMINISTRATION,
Washington, D.C., April 24, 1981.

Committee for the Implementation of Textile Agreements

COMMISSIONER OF CUSTOMS,
Department of the Treasury,
Washington, D.C.

DEAR MR. COMMISSIONER: On May 30, 1980, the Chairman, Committee for the Implementation of Textile Agreements, directed you to prohibit entry for consumption, or withdrawal from warehouse for consumption, during the twelve-month period which began on June 1, 1980 and extends through May 31, 1981 of cotton and man-made fiber textile products in certain specified categories, produced or manufactured in the Dominican Republic, in excess of designated levels of restraint. The Chairman further advised you the levels of restraint are subject to adjustment.[1]

Effective on April 24, 1981, the levels of restraint established for Categories 340, 639 and 649 in the directive of May 30, 1980 are adjusted to the following:

Category	*Adjusted 12-mo level of restraint*[2]
340	139,054 dozen
639	230,601 dozen
649	1,712,250 dozen

The actions taken with respect to the Government of the Dominican Republic and with respect to imports of cotton and man-made fiber textile products from the Dominican Republic have been determined

---

[1] The term "adjustment" refers to those provisions of the Bilateral Cotton, Wool and Man-Made Fiber Textile Agreement of August 7 and 8, 1979 between the Governments of the United States and the Dominican Republic, which provide, in part, that: (1) specific limits may be exceeded by designated percentages to account for swing with comparable amounts being deducted from other specific limits; (2) specific limits may also be increased for carryover and carryforward up to 11 percent of the applicable category limits; and (3) administrative arrangements or adjustments may be made to resolve minor problems arising in the implementation of the agreement.

[2] The levels of restraint have not been adjusted to account for any imports after May 31, 1980.

by the Committee for the Implementation of Textile Agreements to involve foreign affairs functions of the United States. Therefore, the directions to the Commissioner of Customs, which are necessary for the implementation of such actions, fall within the foreign affairs exception to the rule-making provisions of 5 U.S.C. 553. This letter will be published in the Federal Register.

Sincerely,

PAUL T. O'DAY,
Chairman, Committee for the Implementation of Textile Agreements.

(T.D. 81-149)

Cotton, Wool, and Manmade Fiber Textile Products—Restriction on Entry

Restriction on entry of cotton, wool, and manmade fiber textile products manufactured or produced in Poland

There is published below a directive of April 27, 1981, received by the Commissioner of Customs from the Chairman, Committee for the Implementation of Textile Agreements, concerning restriction on entry of cotton, wool and manmade fiber textile products in certain categories manufactured or produced in Poland.

This directive was published in the Federal Register on April 30, 1981 (46 FR 24224), by the committee.

(QUO-2-1)

Dated: May 19, 1981.

RICHARD R. ROSETTIE,
Acting Director,
Duty Assessment Division.

U.S. DEPARTMENT OF COMMERCE,
INTERNATIONAL TRADE ADMINISTRATION,
Washington, D.C., April 27, 1981.

Committee for the Implementation of Textile Agreements

COMMISSIONER OF CUSTOMS,
Department of the Treasury,
Washington, D.C.

DEAR MR. COMMISSIONER: Under the terms of the Arrangement Regarding International Trade in Textiles done at Geneva on De-

347-180 O - 81 - 2

cember 20, 1973, as extended on December 15, 1977; pursuant to the Bilateral Cotton, Wool and Man-Made Fiber Textile Agreement of September 15, 1980 and March 20, 1981, between the Governments of the United States and the Polish People's Republic; and in accordance with the provisions of Executive Order 11651 of March 3, 1972, as amended by Executive Order 11951 of January 6, 1977, you are directed to prohibit, effective on May 4, 1981 and for the twelve-month period beginning on January 1, 1981 and extending through December 31, 1981, entry into the United States for consumption and withdrawal from warehouse for consumption of cotton, wool and man-made fiber textile products in the following categories, produced or manufactured in Poland, in excess of the indicated levels of restraint:

Category	*12-mo level of restraint*	
333	74,000	dozen
410	2,200,000	square yards
433	7,155	dozen
443/643/644	14,852	dozen of which not more than 13,000 dozen shall be applied to all T.S.U.S.A. numbers in these categories except 380.8145, 380.8451, 380.6651, and 380.6652.
612	2,000,000	square yards
645/646	90,816	dozen

In carrying out this directive, entries of cotton, wool and man-made fiber textile products in the foregoing categories, produced or manufactured in Poland, which have been exported to the United States on and after January 1, 1980 and extending through December 31, 1980 shall, to the extent of any unfilled balances, be charged against the levels of restraint established for such goods during the period which began on January 1, 1980 and extends through December 31, 1980. In the event the levels of restraint established for that period have been exhausted by previous entries, such goods shall be subject to the levels set forth in this notice.

The levels of restraint set forth above are subject to adjustment in the future according to the provisions of the bilateral agreement of September 15, 1980 and March 20, 1981, between the Governments of the United States and the Polish People's Republic, which provide, in part that: (1) within the aggregate and applicable group limits

of the agreement, specific levels of restraint may be exceeded by designated percentages; (2) these levels may also be adjusted for carryover and carryforward; and (3) administrative arrangements or adjustments may be made to resolve problems arising in the implementation of the agreement. Any appropriate adjustments under the provisions of the bilateral agreement will be made to you by letter.

A detailed description of the textile categories in terms of T.S.U.S.A. numbers was published in the Federal Register on February 28 1980 (45 F.R. 13172), as amended on April 23, 1980 (45 F.R. 27463), and August 12, 1980 (45 F.R. 53506).

In carrying out the above directions, the Commissioner of Customs should construe entry into the United States for consumption to include entry for consumption into the Commonwealth of Puerto Rico.

The actions taken with respect to the Government of the Polish People's Republic and with respect to imports of cotton, wool and man-made fiber textile products from Poland have been determined by the Committee for the Implementation of Textile Agreements to involve foreign affairs functions of the United States. Therefore, these directions to the Commissioner of Customs, which are necessary for the implementation of such actions, fall within the foreign affairs exception to the rule-making provisions of 5 U.S.C. 553. This letter will be published in the Federal Register.

Sincerely,

PAUL T. O'DAY,
Chairman, Committee for the
Implementation of Textile Agreements.

(T.D. 81-150)

Cotton, Wool, and Manmade Fiber Apparel Products—Restriction on Entry

Restriction on entry of cotton, wool, and manmade fiber apparel products manufactured or produced in Hong Kong

There is published below a directive of March 3, 1981, received by the Commissioner of Customs from the Chairman, Committee for the Implementation of Textile Agreements, concerning export visa requirements for entry of cotton, wool, and manmade fiber apparel products manufactured or produced in Hong Kong. This directive amends, but does not cancel, that Committee's directive of December 30, 1977 (T.D. 78-81).

This directive was published in the Federal Register on March 6, 1981 (46 FR 15529), by the Committee.

(QUO-2-1)

Dated: May 19, 1981,

RICHARD R. ROSETTIE,
Acting Director,
Duty Assessment Division.

U.S. DEPARTMENT OF COMMERCE,
INTERNATIONAL TRADE ADMINISTRATION,
Washington, D.C., March 3, 1981.

Committee for the Implementation of Textile Agreements

COMMISSIONER OF CUSTOMS,
Department of the Treasury,
Washington, D.C.

DEAR MR. COMMISSIONER: This directive further amends, but does not cancel, the directive of December 30, 1977 from the Chairman, Committee for the Implementation of Textile Agreements, which established an export visa requirement for certain cotton, wool and manmade fiber apparel products, produced or manufactured in Hong Kong and exported to the United States.

Under the terms of the Arrangement Regarding International Trade in Textiles done at Geneva on December 20, 1973, as extended on December 15, 1977; pursuant to the Bilateral Cotton, Wool and Man-Made Fiber Textile Agreement of August 8, 1977, as amended, between the Governments of the United States and Hong Kong; and in accordance with the provisions of Executive Order 11651 of March 3, 1972, as amended by Executive Order 11951 of January 6, 1977, you are hereby advised, effective on April 1, 1981, the Government of Hong Kong will begin using new export license forms for apparel products covered by the bilateral agreement (Form TIC 353A), and for apparel products valued at less than U.S. $250 (Form TIC 353). The visa endorsement stamps currently in use by the Hong Kong Government are not being changed. You are directed to permit entry into the United States for consumption and withdrawal from warehouse for consumption of merchandise, accompanied by a valid visa on either the old or new export license forms and exported from Hong

Kong through April 28, 1981. Visas accompanied by the old forms, exported after April 28, 1981, shall be denied entry. Facsimiles of the new forms are enclosed.

The actions taken with respect to the Government of Hong Kong and with respect to imports of cotton, wool and man-made fiber textile products from Hong Kong have been determined by the Committee for the Implementation of Textile Agreements to involve foreign affairs functions of the United States. Therefore, these directions to the Commissioner of Customs, which are necessary for the implementation of such actions, fall within the foreign affairs exception to the rule-making provisions of 5 U.S.C. 553. This letter will be published in the Federal Register.

Sincerely,

PAUL T. O'DAY,
Chairman, Committee for the Implementation of Textile Agreements.

(T.D. 81-151)

Cotton, Wool, and Manmade Fiber Textile Products—Restriction on Entry

Restriction on entry of cotton, wool, and manmade fiber textile products manufactured or produced in Malaysia

There is published below a directive of April 23, 1981, received by the Commissioner of Customs from the Chairman, Committee for the Implementation of Textile Agreements, concerning restriction on entry of cotton, wool, and manmade fiber textile products in certain categories manufactured or produced in Malaysia.

This directive was published in the Federal Register on May 5, 1981 (46 FR 25120), by the committee.

(QUO-2-1)

Dated: May 19, 1981.

RICHARD R. ROSETTIE,
Acting Director,
Duty Assessment Division.

U.S. DEPARTMENT OF COMMERCE,
INTERNATIONAL TRADE ADMINISTRATION,
Washington, D.C., April 28, 1981.

Committee for the Implementation of Textile Agreements

COMMISSIONER OF CUSTOMS,
Department of the Treasury,
Washington, D.C.

DEAR MR. COMMISSIONER: Under the terms of the Arrangement Regarding International Trade in Textiles done at Geneva on December 20, 1973, as extended on December 15, 1977; pursuant to the Bilateral Cotton, Wool and Man-Made Fiber Textile Agreement of December 5, 1980, and February 27, 1981, between the Governments of the United States and Malaysia; and in accordance with the provisions of Executive Order 11651 of March 3, 1972, as amended by Executive Order 11951 of January 6, 1977, you are directed to prohibit, effective on April 30, 1981 and for the twelve-month period beginning on January 1, 1981 and extending through December 31, 1981, entry into the United States for consumption and withdrawal from warehouse for consumption of cotton, wool and man-made fiber textile products in Categories 331, 333/334/335, 338/339, 340, 347/348, 445/446, 604 and 638/639, produced or manufactured in Malaysia, in excess of the following levels of restraint:

Category	*12-mo level of restraint*	
331	508,200	dozen pairs
333/334/335	66,418	dozen of which not more than 33,209 dozen shall be in Cat. 333; not more than 33,209 dozen shall be in Cat. 334; and not more than 33,209 dozen shall be in Cat. 335
338/339	388,281	dozen of which not more than 155,000 dozen shall be in Cat. 339
340	270,635	dozen
347/348	153,000	dozen of which not more than 80,000 dozen shall be in Cat. 348
445/446	17,102	dozen
604	1,097,561	pounds
638/639	160,000	dozen

In carrying out this directive, entries of cotton, wool and manmade fiber textile products in the foregoing categories, except Category 338,

produced or manufactured in Malaysia, which have been exported to the United States on and after January 1, 1980 and extending through December 31, 1980, shall, to the extent of any unfilled balances, be charged against the levels of restraint established for such goods during the twelve-month period beginning on January 1, 1980 and extending through December 31, 1980. In the event the levels of restraint established for that period have been exhausted by previous entries, such goods shall be subject to the levels set forth in this letter. Textile products in Category 338 that have been exported prior to January 1, 1981, shall not be subject to this directive.

The levels set forth above are subject to adjustment in the future according to the provisions of the bilateral agreement of December 5, 1980 and February 27, 1981 between the Governments of the United States and Malaysia which provide, in part, that: (1) specific limits or sublimits may be exceeded by not more than 5 percent, if a corresponding reduction is made in one or more other specific limits in the same group during the same agreement year; (2) specific levels may be adjusted for carryover and carryforward up to 11 percent of the applicable category limits; and (3) administrative arrangements or adjustments may be made to resolve problems arising in the implementation of the agreement. Any appropriate adjustments under the provisions of the bilateral agreement, referred to above, will be made to you by letter.

A detailed description of the textile categories in terms of T.S.U.S.A. numbers was published in the Federal Register on February 28, 1980 (45 F.R. 13172), as amended on April 23, 1980 (45 F.R. 27463), August 12, 1980 (45 F.R. 53506) and December 24, 1980 (45 F.R. 85142). In carrying out the above directions, the Commissioner of Customs should construe entry into the United States for consumption to include entry for consumption into the Commonwealth of Puerto Rico.

The actions taken with respect to the Government of Malaysia and with respect to imports of cotton, wool and man-made fiber textile products from Malaysia have been determined by the Committee for the Implementation of Textile Agreements to involve foreign affairs functions of the United States. Therefore, these directions to the Commissioner of Customs, which are necessary for the implementation of such actions, fall within the foreign affairs exception to the rule-making provisions of 5 U.S.C. 553. This letter will be published in the Federal Register.

Sincerely,

PAUL T. O'DAY,
Chairman, Committee for the
Implementation of Textile Agreements.

(T.D. 81-152)

Cotton, Wool, and Manmade Fiber Textile Products—Restriction on Entry

Restriction on entry of cotton, wool, and manmade fiber textile products manufactured or produced in Mexico

There is published below a directive of December 16, 1980, received by the Commissioner of Customs from the Chairman, Committee for the Implementation of Textile Agreements, concerning restriction on entry of cotton, wool, and manmade fiber textile products in certain categories manufactured or produced in Mexico.

This directive was published in the Federal Register on December 19, 1980 (45 FR 83648), by the committee.

(QUO-2-1)

Dated: May 19, 1981.

RICHARD R. ROSETTIE,
Acting Director,
Duty Assessment Division.

U.S. DEPARTMENT OF COMMERCE,
INTERNATIONAL TRADE ADMINISTRATION,
Washington, D.C., December 16, 1980.

Committee for the Implementation of Textile Agreements

COMMISSIONER OF CUSTOMS,
Department of the Treasury,
Washington, D.C.

DEAR MR. COMMISSIONER: Under the terms of the Arrangement Regarding International Trade in Textiles done at Geneva on December 20, 1973, as extended on December 15, 1977; pursuant to the Bilateral Cotton, Wool and Man-Made Fiber Textile Agreement of February 26, 1979, as amended, between the Governments of the United States and Mexico; and in accordance with the provisions of Executive Order 11651 of March 3, 1972, as amended by Executive Order 11951 of January 6, 1977, you are directed to prohibit, effective on January 1, 1981 and for the twelve-month period extending through December 31, 1981, entry into the United States for consumption and withdrawal from warehouse for consumption of cotton, wool, and manmade fiber textile products in the following

categories, produced or manufactured in Mexico, in excess of the following levels of restraint:

Category	*12-mo level of restraint*	
335	36,731	dozen
336	22,075	dozen
338/339	421,387	dozen
341	68,966	dozen
345	19,022	dozen
347/348	602,934	dozen of which not more than 361,761 dozen shall be in Cat. 347 and not more than 361,761 dozen shall be in Cat. 348.
352	181,818	dozen
436	2,033	dozen
604 (only T.S.U.S.A. 310.5049)	914,634	pounds
633	53,766	dozen
634/635	306,501	dozen of which not more than 183,901 dozen shall be in Cat. 634 and not more than 183,901 dozen shall be in Cat. 635.
638/639	14,738,793	square yards equivalent of which not more than 491,293 dozen shall be in Cat. 638 and not more than 589,552 dozen shall be in Cat. 639.
641	276,728	dozen
647/648	1,498,886	dozen of which not more than 899,332 dozen shall be in Cat. 647 and not more than 899,332 dozen shall be in Cat. 648.
649	2,606,250	dozen
650	13,725	dozen

In carrying out this directive, entries of cotton, wool and man-made fiber textile products in the foregoing categories, except Categories

347-180 O - 81 - 3

335, 341, and 345, produced or manufactured in Mexico, which have been exported on and after January 1, 1980 and extending through December 31, 1980, shall to the extent of any unfilled balances, be charged against the levels of restraint established for such goods during the period which began on January 1, 1980 and extends through December 31, 1980. In the event the levels of restraint established for that period have been exhausted by previous entries, such goods shall be subject to the levels set forth in this notice.

Textile products in Categories 335, 341, and 345 which have been exported to the United States prior to January 1, 1981 shall not be subject to this directive.

The levels set forth above are subject to adjustment in the future according to the provisions of the bilateral agreement of February 26, 1979, as amended, between the Governments of the United States and Mexico, which provide, in part, that: (1) specific limits or specific sublimits may be exceeded by not more than seven percent for swing in any agreement period; (2) these same limits may be adjusted for carryover and carry-forward up to 11 percent of the applicable category limit or sublimit; and (3) administrative arrangements or adjustments may be made to resolve problems arising in the implementation of the agreement. Any appropriate adjustments under the provisions of the bilateral agreement, referred to above, will be made to you by letter.

A detailed description of the textile categories in terms of T.S.U.S.A. numbers was published in the Federal Register on February 28, 1980 (45 F.R. 13172), as amended on April 23, 1980 (45 F.R. 27463) and August 12, 1980 (45 F.R. 53506).

In carrying out the above directions, the Commissioner of Customs should construe entry into the United States for consumption to include entry for consumption into the Commonwealth of Puerto Rico.

The actions taken with respect to the Government of Mexico and with respect to imports of cotton, wool and man-made fiber textile products from Mexico have been determined by the Committee for the Implementation of Textile Agreements to involve foreign affairs functions of the United States. Therefore, these directions to the Commissioner of Customs, which are necessary for the implementation of such actions, fall within the foreign affairs exception to the rulemaking provisions of 5 U.S.C. 553. This letter will be published in the Federal Register.

Sincerely,

PAUL T. O'DAY,
Chairman, Committee for the
Implementation of Textile Agreements.

(T.D. 81-153)

Cotton Textile Products—Restriction on Entry

Restriction on entry of cotton textile products manufactured or produced in Pakistan

There is published below a directive of December 19, 1980, received by the Commissioner of Customs from the Chairman, Committee for the Implementation of Textile Agreements, concerning restriction on entry of cotton textile products in certain categories manufactured or produced in Pakistan.

This directive was published in the Federal Register on December 24, 1980 (45 FR 85140), by the committee.

(QUO-2-1)

Dated: May 19, 1981.

RICHARD R. ROSETTIE,
Acting Director,
Duty Assessment Division.

U. S. DEPARTMENT OF COMMERCE,
INTERNATIONAL TRADE ADMINISTRATION,
Washington, D.C., December 19, 1980.

Committee for the Implementation of Textile Agreements

COMMISSIONER OF CUSTOMS,
Department of the Treasury,
Washington, D.C.

DEAR MR. COMMISSIONER: Under the terms of the Arrangement Regarding International Trade in Textiles done at Geneva on December 20, 1973, as extended on December 15, 1977; pursuant to the Bilateral Cotton Textile Agreement of January 4 and 9, 1978, as amended, between the Governments of the United States and Pakistan; and in accordance with the provisions of Executive Order 11651 of March 3, 1972, as amended by Executive Order 11951 of January 6, 1977, you are directed to prohibit, effective on January 1, 1981 and for the eighteen-month period extending through June 30, 1982, entry into the United States for consumption and withdrawal from warehouse for consumption of cotton textile products in the following categories, produced or manufactured in Pakistan, in excess of the indicated eighteen-month levels of restraint.

Category	*18-mo level of restraint*	
313	100,817,267	square yards
315	58,871,828	square yards
317	9,768,000	square yards
320	1,500,000	square yards
331	300,000	dozen pairs
336	23,179	dozen
339	652,911	dozen of which not more than 229,563 dozen shall be in T.S.U.S.A. Nos. 382.0669 and 382.0671.
340	43,750	dozen
341	242,395	dozen
342	58,989	dozen
348	58,989	dozen
359	400,109	pounds
363	26,411,484	numbers
369 [1]	7,826,087	pounds

In carrying out this directive, entries of cotton textile products in the foregoing categories, except Category 317, produced or manufactured in Pakistan, which have been exported to the United States on and after January 1, 1980 and extending through December 31, 1980, shall, to the extent of any unfilled balances, be charged against the levels of restraint established for such goods during the twelve-month period which began on January 1, 1980 and extends through December 31, 1980. In the event the levels of restraint established for that period have been exhausted by previous entries, such goods shall be subject to the levels set forth in this letter. Cotton textile products in Category 317, which have been exported prior to January 1, 1981 shall not be subject to this directive.

The levels set forth above are subject to adjustment in the future according to the provisions of the bilateral agreement of January 4 and 9, 1978, as amended, between the Governments of the United States and Pakistan which provide, in part, that: (1) within the aggregate and group limits, specific levels of restraint may be exceeded by designated percentages; (2) specific levels may be increased for carryover and carryforward; (3) administrative arrangements or adjustments may be made to resolve problems arising in the implementation of the agreement. Any appropriate adjustments under the provisions of the bilateral agreement, referred to above, will be made to you by letter.

[1] In Category 369, all T.S. U.S.A. numbers in the category except 366.1855.

A detailed description of the textile categories in terms of T.S.U.S.A. numbers was published in the Federal Register on February 28, 1980 (45 F.R. 13172), as amended on April 23, 1980 (45 F.R. 27463), and August 12, 1980 (45 F.R. 53506).

In carrying out the above directions, the Commissioner of Customs should construe entry into the United States for consumption to include entry for consumption into the Commonwealth of Puerto Rico.

The actions taken with respect to the Government of Pakistan and with respect to imports of cotton textile products from Pakistan have been determined by the Committee for the Implementation of Textile Agreements to involve foreign affairs functions of the United States. Therefore, these directions to the Commissioner of Customs, which are necessary for the implementation of such actions, fall within the foreign affairs exception to the rule-making provisions of 5 U.S.C. 553. This letter will be published in the Federal Register.

Sincerely,

PAUL T. O'DAY,
Chairman, Committee for the Implementation of Textile Agreements.

(T.D. 81-154)

Foreign Currencies—Daily Rates for Countries Not on Quarterly List

The Federal Reserve Bank of New York, pursuant to section 522(c), Tariff Act of 1930, as amended (31 U.S.C. 372 (c)), has certified buying rates for the dates and foreign currencies shown below. The rates of exchange, based on these buying rates, are published for the information and use of Customs officers and others concerned pursuant to Part 159, Subpart C, Customs Regulations (19 CFR 159, Subpart C).

Argentina peso:	
May 4–7, 1981	$0.000315
May 8, 1981	.000313
Brazil cruzeiro:	
May 4, 1981	$0.012293
May 5–8, 1981	.012057
People's Republic of China yuan:	
May 4, 1981	$0.592347
May 5, 1981	.585309
May 6–8, 1981	.582411
Chile peso:	
May 4–8, 1981	$0.025667

Colombia peso:	
May 4–7, 1981	$0. 018921
May 8, 1981	.018854
Greece drachma:	
May 4, 1981	$0. 018553
May 5, 1981	.018100
May 6, 1981	.018215
May 7, 1981	.018034
May 8, 1981	.018182
Hong Kong dollar:	
May 4, 1981	$0. 185082
May 5, 1981	.183959
May 6, 1981	.184298
May 7, 1981	.183857
May 8, 1981	.184502
Indonesia rupiah:	
May 4–8, 1981	$0. 001590
Iran rial:	
May 4–5, 1981	$0. 012995
May 6, 1981	.012962
May 7–8, 1981	.013004
Israel shekel:	
May 4–8, 1981	$0. 107991
Peru sol:	
May 4–8, 1981	$0. 002469
Philippines peso:	
May 4–8, 1981	$0. 130548
Singapore dollar:	
May 4, 1981	$0. 469263
May 5, 1981	.467181
May 6, 1981	.467727
May 7, 1981	.465983
May 8, 1981	.469043
South Korea won:	
May 4–5, 1981	$0. 001471
May 6–8, 1981	.001470
Thailand baht (tical):	
May 4–8, 1981	$0. 048193
Venezuela bolivar:	
May 4–8, 1981	$0. 232883

(LIQ–03–01 O:C:E)

Dated: May 8, 1981.

KENNETH A. RICH,
Chief,
Customs Information Exchange.

(T.D. 81-155)

Foreign Currencies—Variances From Quarterly Rate

The following rates of exchange are based upon rates certified to the Secretary of the Treasury by the Federal Reserve Bank of New York, pursuant to Section 522(C), Tariff Act of 1930, as amended (31 U.S.C. 372(c)), and reflect variances of 5 per centum or more from the quarterly rate published in Treasury Decision 80-249 for the following countries. Therefore, as to entries covering merchandise exported on the dates listed, whenever it is necessary for Customs purposes to convert such currency into currency of the United States, conversion shall be at the following rates.

Austria schilling:	
May 4, 1981	$0.063131
May 5, 1981	.062325
May 6, 1981	.062952
May 7, 1981	.062150
May 8, 1981	.062893
Belgium franc:	
May 4, 1981	$0.027352
May 5, 1981	.027056
May 6, 1981	.027144
May 7, 1981	.026976
May 8, 1981	.027248
Denmark krone:	
May 4, 1981	$0.141343
May 5, 1981	.140056
May 6, 1981	.140805
May 7, 1981	.139626
May 8, 1981	.140696
Finland markka:	
May 4, 1981	Quarterly
May 5, 1981	$0.234028
May 6, 1981	Quarterly
May 7, 1981	$0.233973
May 8, 1981	.233618
France franc:	
May 4, 1981	$0.186672
May 5, 1981	.185322
May 6, 1981	.187073
May 7, 1981	.186081
May 8, 1981	.187266

Germany deutsches mark:	
May 4, 1981	$0.445514
May 5, 1981	.441306
May 6, 1981	.442870
May 7, 1981	.439657
May 8, 1981	.443459
Ireland pound:	
May 4, 1981	$1.6300
May 5, 1981	1.6120
May 6, 1981	1.6200
May 7, 1981	1.6075
May 8, 1981	1.6240
Italy lira:	
May 4, 1981	$0.000897
May 5, 1981	.000886
May 6, 1981	.000888
May 7, 1981	.000884
May 8, 1981	.000889
Netherlands guilder:	
May 4, 1981	$0.400481
May 5, 1981	.396825
May 6, 1981	.400160
May 7, 1981	.396040
May 8, 1981	.399122
Portugal escudo:	
May 5, 1981	$0.016584
May 6, 1981	.016667
May 7, 1981	.016584
May 8, 1981	.016667
Spain peseta:	
May 4, 1981	$0.011101
May 5, 1981	.010971
May 6, 1981	.011101
May 7, 1981	.011046
May 8, 1981	.011111
Sweden krone:	
May 5, 1981	$0.205761
May 6, 1981	.206718
May 7, 1981	.205550
May 8, 1981	.206271
Switzerland franc:	
May 4, 1981	$0.487567
May 5, 1981	.483676
May 6, 1981	.485319

May 7, 1981	.481812
May 8, 1981	.486855
United Kingdom pound:	
May 4, 1981	$2.1180
May 5, 1981	2.1135
May 6, 1981	2.1168
May 7, 1981	2.1035
May 8, 1981	2.1155

(LIQ-03-01 O:C:E)

Dated: May 8, 1981.

KENNETH A. RICH,
Chief,
Customs Information Exchange.

347-180 O - 81 - 4

U.S. Customs Service

Customs Service Decisions

DEPARTMENT OF THE TREASURY,
OFFICE OF THE COMMISSIONER OF CUSTOMS,
Washington, D.C.

The following are decisions made by the United States Customs Service where the issues involved are of sufficient interest or importance to warrant publication in the CUSTOMS BULLETIN.

DONALD W. LEWIS,
Director,
Office of Regulations and Rulings.

(C.S.D. 81-101)

Classification: Plastic Napkin Ring

Date: August 10, 1979
File: CLA-2:R:CV:MC
060306 MJ

This ruling classifies a plastic napkin ring with an artificial flower attachment which is a product of Hong Kong.

Facts.—The inquirer's sample is a clear plastic oval napkin ring that measures 2 inches x 3 inches x 2 inches. There is an indentation on the ring from which a prong extends. An artificial flower, made of polyester fabric and colored soft plastic, is attached to the prong by means of a narrow cylindrical piece of soft plastic (designed to look like the pistil of the flower) that slips over the prong and snaps tight at the extended end. The article is said to be in chief value of the polyester material. We assure that the sample is to be imported as an entirety, with the flower attached to the plastic ring.

Law and analysis.—The sample cannot be classified under items 748.20 or 748.21, Tariff Schedules of the United States (TSUS) as an artificial flower, nor under item 389.61, TSUS, as an article, not specially provided for . . . artificial flower. The sample is more

accurately described as a napkin ring than as an artificial flower, precluding classification under the items.

On the other hand, headnote 1, Subpart C, Schedule 3, defines "furnishings" as follows:

> 1. For the purposes of this subpart, the term *"furnishings"* means curtains and drapes, including panels and valences; towels, napkins, tablecloths, mats, scarves, runners, doilies, centerpieces, antimacassars, and furniture slipcovers, and like furnishings, all the foregoing of textile materials, and not specially provided for.

The term "like furnishings" is subject to the doctrine of *ejusdem generis* which requires that when general words follow an enumeration of things, the general words are limited to things of the same kind or class as those enumerated.

In *Economy Cover Corp* v. *United States*, 76 Cust Ct. 130 C.D. 4645 (1976), the court explicated the meaning of the headnote as follows: The essential characteristic of the enumerated articles is that they are "used with furniture, or with other articles used in a home, to adorn or protect it, and enhance the room or place in which the articles are displayed or located." A "like furnishing" must therefore satisfy this condition.

The napkin ring adorns and enhances the use of napkins in a dining room. It is intended for display. Therefore, the sample napkin ring is a "like furnishing" within the meaning of the headnote.

Finally, it may be argued that the flower ornaments the plastic ring. Headnote 3(a), Schedule 3, TSUS, provides that "the term *'ornamented'*, as used with reference to textile fabrics and other articles of textile materials, means fabrics and other articles of textile materials which are ornamented with . . ." This means that the article that is ornamented must be of textile materials. In the sample, the article that might be ornamented, the napkin ring itself, is of plastic and hence falls outside the definition of the headnote.

Holding.—The sample napkin ring is classifiable under the provision in item 367.60, TSUS, for other furnishings, not ornamented, of man-made fibers, other, dutiable at the rate of 25 cents per pound plus 17 percent ad valorem.

(C.S.D. 81–102)

Classification: Entry for Test and Repair Certain Electronic Components of American Origin Used in the Foreign Assembly of Industrial Machinery

Date: October 16, 1980
File: CLA-2:RRUCSC
063647 LLB

In your letter of March 11, 1980, you pose five questions relative to a planned assembly operation in Mexico of certain controls for industrial machinery. The questions are:

1. are circuit boards consisting of domestically produced boards to which are affixed foreign-made components (integrated circuits, semi-conductors, diodes, resistors, capacitors, etc.), considered to be products of the United States for purposes of reimportation under item 807.00 Tariff Schedules of the United States (TSUS), after being exported to Mexico for various assembly operations?

2. if, during the Mexican assembly operation, it becomes necessary to return certain boards to the United States for testing and, should such tests indicate the necessity for repairs, which of items 864.05 or 864.30, TSUS, would be the appropriate provision under which to temporarily import the articles under bond?

3. if the articles are temporarily imported for repairs and then must be tested following that process which of items 864.05 or 864.30, TSUS, is the appropriate tariff provision?

4. does an interim importation under bond and exportation in satisfaction of the bond provision prejudice ultimate importation under item 807.00, TSUS?

5. is a viable alternative to use of either item 864.05 or 864.30, TSUS, presented by utilizing a Foreign Trade Zone for any required testing and repairs, and is importation into such a zone a transaction which might prejudice ultimate importation under item 807.00, TSUS?

The circumstances in this case are as follows. Various electronic components are imported from several sources and are placed or "stuffed" onto laminated sheets or boards which are manufactured here. The boards are cut, drilled, etched, plated, cleaned and lacquered in the United States prior to the "stuffing" operation. Following the crimping of the components onto the boards, they are exported to Mexico for use in assembling controls for industrial machinery. Periodically it may become necessary to send some of the boards back to this country for testing, repair, or both. Following

these domestic operations, entry having been made under Temporary Importation Bond, the materials are sent back to Mexico within the one year bond period, thus cancelling the bond and avoiding any liability for liquidated damages. One of two tariff provisions would be involved in these circumstances, either item 864.05, TSUS, or item 864.30, TSUS. Following final assembly operations in Mexico, you would propose to enter the final products under item 807.00, TSUS, upon importation. As an alternative to entering the articles for testing and repair under a bond, you state that you may consider entering them in a Foreign Trade Zone as nonprivileged merchandise before returning the merchandise to Mexico and reimporting under item 807.00, TSUS.

Regarding your first question, the provisions of item 807.00, TSUS, are available to persons performing foreign assembly operations, and operations incidental thereto, on components of American origin. Under certain circumstances, articles with foreign components may be considered to be of domestic origin. Such instances are limited to circumstances where operations performed on imported components in the United States cause them to lose their identity in the product which is to be shipped abroad for assembly in line with item 807.00, TSUS.

You state that the imported electronic components which are placed on the American-made laminated boards are, ". . . stuffed into pre-drilled holes and crimped." We are of the opinion that a foreign component does not lose its identity as such when placed on a board in such a tentative fashion. The result would be different if the components were affixed in some permanent manner, such as soldering, prior to exportation for assembly.

Regarding your second and third questions, we have approved the use of dual temporary importation under bond classifications in other cases. Consequently, we do not believe that the dual uses pose a problem. The entry must show both operations, repairing and testing. We have also held that an operation incidental to the primary purpose such as the testing of an article entered under item 864.05, Tariff Schedules of the United States (TSUS) was permitted. That is, the unspecified operation (testing) which is wholly incidental to the primary operation (repairing) is not precluded by an entry under one item number.

It is important, however, that the entry describes the intended operations accurately, if each article is to be repaired and tested, then the entry must be made under items 864.05 and 864.30, TSUS. If the testing is only incidental to the primary purpose of repairing the imported article, entry may be under item 864.05, TSUS.

In answer to your fourth and fifth questions, it is our position that entry under item 807.00, TSUS, is available to importers only upon the first arrival of qualifying merchandise within the jurisdiction of the United States. This would include entry of merchandise under bond into the Customs Territory. We have also determined that while a Foreign Trade Zone is not within the Customs Territory for duty purposes, merchandise entered therein is within Customs jurisdiction. Therefore, item 807.00, TSUS, tariff treatment is not available in the situations you cite in question four and five.

In order to satisfy the requirements for exportation for the situations contemplated in questions two and three, the final assembly in Mexico must result in a new and different article than the merchandise temporarily imported under bond.

(C.S.D. 81-103)

Classification: Export Value—Steel Plate

Date: October 20, 1980
File: CLA-2:RRUCV
065126 JV

Re Application for further review of protest No. 3801-9-000202.
DISTRICT DIRECTOR OF CUSTOMS,
Detroit, Michigan.

DEAR SIR: This is in reply to an Application for Further Review of Detroit Protest No. 3801-9-000202, which was timely filed.

Issues: (1) Whether a "master" contract for future delivery entered into between the unrelated foreign seller and importer established a "price" within the definition of export value, section 402(b), Tariff Act of 1930, as amended.

Facts: The instant protest covers steel plate exported from Spain on April 15, 1978, and entered into the United States on April 28, 1978. The record reveals no other sales or offers in Spain of such or similar merchandise for export to the United States at the time of exportation of the merchandise under consideration.

The contract in question was entered into on April 7, 1978, and provides for the sale and future delivery of 65,000 tons of heavy steel plate at a trigger price of $343.01 per metric ton, C.I.F. duty-paid Great Lakes or Gulf region. A portion of said steel was to be delivered on or before June 1, 1978, and the remainder during the months of September, October and November, 1978. Delivery was to be made against the receipt of subsequent purchase orders.

The initial shipment was made on April 15, 1978, and was covered by the subject entry, which was appraised and liquidated at the trigger price of $343.01 per ton delivered to Great Lakes, less ocean freight. This price was applicable to pre-June deliveries only.

Protestant, through counsel, claims that the usual practice of determining export value on facts similar to those in the present case is predicated on the issuance and receipt of a purchase order for the merchandise against a "master" contract for future deliveries and that no weight is generally afforded such "master" contract. In the instant case, such purchase order was not submitted until after the date of exportation. Therefore, there is no sale, offer, or price at the time of exportation of the merchandise under consideration which can properly be evaluated to derive an export value. We note that protestant has retreated from its earlier position that export value be predicated on the invoice price. It now argues that United States value is the proper basis of appraisement.

Law and analysis: Export value is the price, at the time of exportation to the United States of the merchandise undergoing appraisement, at which such or similar merchandise is freely sold or, in the absence of sales, offered for sale in the principal markets of the country of exportation for export to the United States. Thus, to the extent merchandise subject to trigger pricing represents such a price, it is possible to find export value.

You will note that section 402(b) requires a freely sold price at the time of exportation. It has long been the position of the Customs Service that the phrase "at the time of exportation" means that moment prior to the actual exportation of the merchandise under consideration at which a freely sold price can be determined. Therefore, the price which is closest to the moment of exportation is the price we are required to use in determining export value.

This position is supported by a long line of court cases. For instance, in *United States* v. *New York Merchandise Company, Inc.*, C.A.D. 274 (1944), the court stated "the phrase 'at the time of exportation' does not necessarily mean the hour or the day of exportation, but a time near enough to the date of exportation and under such circumstances as will reflect the price of the goods on the date of exportation."

When applying the above principles to the instant case, it is clear that the trigger price, as evidenced by the "master" contract, was the result of arms-length negotiations and represented the freely sold price nearest to the date of exportation which most accurately and fairly reflected the price of the imported plate on that date. It is this price, therefore, that we are required to use in determining its appraised value. The fact that the price was for future delivery is no bar to a finding of export value.

The contract provides for a C.I.F. price of $343.01 per metric ton regardless of whether the merchandise is delivered to the Great Lakes or Gulf region. To arrive at an export value, the varying costs of ocean freight must be deducted from this price. Protestant claims that since there is no constant cost of ocean freight which may be deducted from the C.I.F. price to derive a fixed or uniform price of "such" merchandise, there can be no export value for the merchandise.

While it is true that the courts have rejected export value resulting from the inability to arrive at a uniform C.I.F. price after deducting the varying freight costs to alternate destinations in the United States, the record here reveals no shipments of "such" merchandise to the Gulf region at or about the time of the subject shipment which would have resulted in different net prices. You point out that even if such shipments had existed, the Gulf prices would have been reduced by the seller to equal the trigger prices for that region. Based on these facts, we conclude that the trigger price of $343.01, less the ocean freight from Spain to the Great Lakes, was, at the relevant period, the one freely sold price in the principal market of the country of exportation. Accordingly, the protest is denied.

Holding: Export value at the trigger price is the correct appraisement.

(C.S.D. 81-104)

Constructed Value: Whether R&D Costs May Be Shown as Reduction in Declared Profit as Opposed to Increase in Sales Price for Constructed Value

Date: October 24, 1980
File: CLA-2:RRUCV
542210 MK
Your ref.: CLA-2-DD:CV:WCS

To: District Director, Philadelphia, Pennsylvania.
From: Director, Classification and Value Division.
Subject: Whether research and development costs may be shown as a reduction in declared profit as opposed to an increase in the sales price for constructed value (internal advice No. 109/80).

Your memorandum of June 20, 1980, with enclosures, concerns the proper addition for profit to be used in the constructed value calculations of consumer electronics products assembled or manufactured in Brazil by a subsidiary of the importer (Corp. name.)

You advise that prior to 1975, (Corp.) charged its subsidiary for R&D expenses incurred in the United States. This cost was carried

on the books of the Brazilian operation as one of the costs of production. In 1975, a new Brazilian law mandated that R&D could not properly be included as a cost of the Brazilian subsidiary. Consequently, these costs were no longer shown on its books.

However, when (Corp.) prepared its worksheets used in filing consumption entries for this merchandise, they included this R&D cost as one of the costs in their calculation. The results of this addition reduced the profit figure below that shown on the Brazilian manufacturer's books.

There are no other producers of merchandise of the same class or kind in Brazil selling for export to the United States.

You ask whether the profit declaration of the importer's constructed value calculation is acceptable, or whether the higher profit shown on the Brazilian manufacturer's books is more correct.

You believe that the profit as declared on the importer's worksheets should be accepted. (Corp.) has, in its own accounting records, charged the R&D costs to its subsidiary, even though it is not reflected on the subsidiary's books because of the Brazilian law.

You believe this is a legitimate cost incurred by the manufacturer and must be reflected in constructed value.

Since there are no other producers or assemblers of merchandise of the same general class or kind in Brazil selling for export to the U.S., we must use the the actual profit of the Brazilian manufacturer. As this does not include a profit on the R&D, no addition for profit on the R&D should be taken.

(C.S.D. 81-105)

Classification: Heavy-Duty Transporters

Date: October 24, 1980
File: CLA-2:RRUCGC
065055 JCH

To: District Director of Customs, San Francisco, California.
From: Director, Classification and Value Division.
Subject: Request for internal advice No. 11/80, concerning the tariff classification of a heavy-duty transporter.

In your memorandum of November 5, 1979, you requested internal advice on the tariff classification of the subject transporter. The request for a ruling through the internal advice procedures was initiated on behalf of the importer on October 3, 1979.

Issue: You propose classifying the subject transporter under the provision for automobile trucks valued at $1,000 or more in

347-180 O - 81 - 5

item 692.02, Tariff Schedules of the United States (TSUS). This provision requires a temporarily increased column 1 rate of duty of 25 percent ad valorem. It is contended that the merchandise is properly classified under the provision for fork-lift trucks, platform trucks and other self-propelled work trucks of off-of-the-highway types used in factories, warehouses, or transportation terminals for short-distance transport, towing or handling of articles, in item 692.40, TSUS. The column 1 rate of duty required under this provision for merchandise entered before January 1, 1980, is 4.5 percent ad valorem. It is further claimed that the merchandise is alternately classifiable under the provision for motor vehicles, other than automobile trucks and motor buses, in item 692.10, TSUS, requiring a column 1 rate of duty before January 1, 1980, of 3 percent ad valorem.

Facts: The vehicle in question belongs to a French-made family of transportation equipment designated as "Automas." One of the categories of Automas is offered for sale as shipyard transporters. However, the Automas family also includes vehicles for industrial use and for road transportation. Apparently all of these vehicles are sold and equipped in accordance with customer specifications, and certain features cross category lines.

The Automas in question was furnished in accordance with the specifications of the importer, a United States producer of trailers for the trucking industry. The product was made available to its customer as an extension of its own product line for use in moving prefabricated buildings and building modules at an oil production site at Prudhoe Bay, Alaska. The vehicle was imported because the importer does not manufacture equipment of the type in question, nor does any of its domestic competitors. Nor is equipment of this type manufactured by the American automotive industry.

While the Automas at issue is not a strict exemplar of Automas offered for sale for shipyard uses, it most resembles that category of Automas in the nature of its suspension and in its maneuvering characteristics. It differs, however, in that an engine of 140 horsepower is used, a smaller engine than normally supplied. Further, the Automas in question was provided with tongues or drawbars for towing. The vehicle was not actually used in a shipyard, and it was indicated that a prospective purchaser would not use it in a shipyard.

The vehicle in question has an unobstructed flat bed achieved by suspending the cab underneath the bed at one end. The cab is small and does not have the space or other accommodations for comfort ordinarily associated with cabs used in the heavy trucking industry. Further, the cab does not meet highway safety requirements because of its limited visibility. In this connection, it should be noted that vehicles in the Automas road vehicle line have larger cabs elevated above the beds forming a more typical truck configuration.

The Automas in question has seven axels with four wheels per axel for a total of 28 wheels and a rated weight carrying capacity of 325 tons. Each pair of wheels has independent suspension which allows for multi-axel Ackerman steering capability for turning in an arc without wheel slide. The Ackerman steering mode can be substituted by a control to a 90 degree turning of the wheels allowing the vehicle to move sideways. The steering is controlled and operated completely by a hydraulic system which can be operated from the cab when the vehicle is being self-propelled. When it is being towed, the motion of the drawbar automatically controls the turning of the wheels.

The suspension is also entirely controlled hydraulically without any springs, shock absorbers or accumulators to absorb shock. Levelness and traction over rough terrain are achieved by dividing the hydraulic system into separate zones thereby preventing tipping or other exaggerated motions. The natural resistance of the hydraulic cylinders and their valves contributes to ride stability.

The bed is 13 feet by 57 feet. When towed, the Automas is pulled from the end opposite the cab. When two are towed in tandem, they are placed back to back and thereby towed from a cab end. When placed side by side as modules for wide capacity transport they are towed by a bar between the cabs. With a full load, the Automas can be towed at a speed up to 3 miles per hour and when self-propelled it can move at .3 miles per hour. In a typical application, the Automas was used to pick up a building on trestles at the dock area by moving, with its bed lowered, between the trestles and raising the building and its trestle off the ground. The vehicle was then towed over a distance of approximately 27 miles to the work site. While being towed, the trestle remained attached to the load thereby allowing little clearance between the bottom of the trestle and the highway. This was done for safety reasons and because of the limited lifting capabilities of the bed. After the tow bar was disconnected, the vehicle positioned the building under its own power on the pylons where it would remain permanently.

In addition to lack of conformity to highway safety requirements, highway travel to transport a load or to transfer itself from work site to work site is not practical due to the low speed and low fuel efficiency of the vehicle. The conversion of mechanical energy to hydraulic power and back to mechanical energy results in an efficiency rating below normal highway vehicle standards. Accordingly, the Automas is itself transported on another vehicle for transportation to other work sites.

A list has been submitted on behalf of the importer showing that eight German-made shipyard transporters have been imported during the past several years for use at various ship building locations in the United States.

Power is delivered hydraulically to a limited number of wheels to which hydraulic motors are attached. The engine drives a hydraulic pump which delivers hydraulic power to the wheels as well as to the other hydraulic equipment. The bed can be moved up and down hydraulically, and when a load is being carried, the bed is usually left in mid-position. The vehicle contains no transmission or drive train of the type normally used on trucks.

Law and analysis: Central to a discussion of the issues involved is an analysis of the scope of the term "automobile trucks" as used in the tariff schedules. This term is a survivor from former tariff schedules in effect in the earlier part of this century when the motor vehicular denotation of the term "truck" did not have the primacy among other denotations that it has in the American language today. Accordingly, little attention has been given to the word "automobile" as a basis for limiting tariff provisions encompassing motor trucks, and limitations have been based on other reasons.

For example, fire engines and mobile cranes have been excluded from classification as automobile trucks primarily because they carry equipment rather than cargo. *American-La France Fire Engine Co.* v. *Riordan*, 6 F. 2d 964 (2d Cir. 1925); *Coles Cranes, Inc.* v. *United States*, 32 Cust. Ct. 108, C.D. 1590 (1954). Accordingly, the tariff schedules now have separate provisions for specially constructed and equipped vehicles in items 692.14 and 692.16. The separate provision in item 692.40 for fork-lift trucks, etc., similarly resulted from interpretations which excluded these vehicles from the term "automobile trucks."

The ruling applicant has also pointed out other exclusions. For example, we declined to classify cargo-carrying three-wheeled motor scooters, military personnel carriers which could be converted to cargo-carrying uses, and cargo-carriers running on skis as automobile trucks. T.D. 56089(60), 99 Treas. Dec. 37 (1963); T.D. 56502(67), 100 Treas. Dec. 638 (1965); T.D. 56521(116), 100 Treas. Dec. 767 (1965). The ruling applicant now suggests that another exception be added to the list based on the many features of the instant merchandise which distinguish it from trucks as visualized in the ordinary conception. In this connection, it is emphasized by the ruling applicant that the vehicle in question does not look like a truck. The *American-La France* case, *supra*, and other cases cited by the ruling applicant which involve interpretations of the term "truck" in non-Customs tax contexts further suggest that vehicles for off-of-the-highway uses should constitute a separate exception. But non-highway use, although a factor to be considered with other factors in excluding a vehicle from classification as a truck, has not been considered by

the Customs Service to warrant an exception from the truck provisions by itself. It would appear that for tariff classification purposes the term "automobile truck" has been given a broad interpretation.

But we have been more specific in limiting the scope of the provision for special-purpose motor vehicles in item 692.16 for example, we have excluded from that provision mobile special-purpose vehicles which must be loaded on a flat-bed trailer or other conveyance for transport from job site to job site. Decision dated July 14, 1975, file No. 038001; decision dated June 2, 1978, file No. 054990. Both vehicles which were the subject of these decisions had maximum speeds when self-propelled greater than the maximum self-propelled speed of the vehicle in question. It may be inferred from these decisions that the provisions for special-purpose vehicles encompass only equipment mounted on chassis similar in their degree of mobility to those provided by the American automotive industry for the trucking industry. This inference exists even though classifications under item 692.16 are not governed by a description containing the term "automobile" but by one containing the term "motor vehicles." In our view, the pertinent provision for automobile trucks set forth in the tariff schedules as a species of motor vehicle cannot, in these circumstances, be interpreted as encompassing vehicles with a lesser degree of mobility than those classified more directly under the generic reference.

Accordingly, we find that the need to transport the Automas on another vehicle to another job site, particularly when due to its unique capabilities another job site may be many miles away, is a factor militating against classification as a truck. The practical considerations involving non-use of its self-propelling capabilities when transporting cargo over shorter distances are similarly unpersuasive toward classification as a truck. While you indicate the transporter has all the features and elements of a truck, its configuration, suspension, steering system, power transmission system, and braking system operate on different principles than those ordinarily employed in trucks produced by the automotive industry. As indicated above, the Automas does not have a power to weight ratio, power train or brakes of the types used in conventional motor vehicles. The method in which it handles its cargo, combining both the functions of transporter and positioner, with trestles close to the road while straddling the bed, further does not conform to more conventional trucking practices. We agree with the importer that item 692.02 is not a so-called "basket" provision, and that the vehicle in question departs in too many particulars from the characteristics

normally attributed to trucks to be considered as encompassed within item 692.02, which encompasses only trucks.

We further agree that the transporter in question is properly classifiable under item 692.40. As compared to the smaller motor and the provision for being towed, the salient feature of the Automas is its maneuverability in close quarters, the same feature exclusively provided in the Automas shipyard transporter line. While the use of the transporter and the use contemplated by a prospective purchaser do not involve shipyard operations, it is the chief use nationwide of merchandise of the same class or kind that is controlling. General Headnote 10(e)(i), TSUS. The available evidence in its entirety does not provide a basis for finding that the transporter in question is of a class or kind of vehicle chiefly used for different applications. In this connection, we have previously held that a shipyard constitutes a factory for the purpose of classifying equipment used in shipyards under item 692.40. ORR Ruling 792–68.

In view of the foregoing discussion, it is unnecessary to further discuss the possible alternate classification under item 692.10, a provision which is less specific than item 692.40.

Holding: The subject transporter is properly classifiable under item 692.40. A copy of this decision should be made available to the importer.

(C.S.D 81–106)

Carrier Control: Vessels of Chile Permitted to Transport Articles Described in Sections 4.93(b)(1) and 4.93(b)(2) of the Customs Regulations Between Ports of the United States.

Date: October 29, 1980
File: ADM–9–03/VES–3–03
104906MKT

To: All regional Commissioners.

The State Department has advised the Department of Treasury that vessels of Chile should be permitted to transport certain articles described in sections 4.93(b)(1) and 4.93(b)(2), Customs regulations, between ports of the United States. Action to add Chile to the lists of nations in sections 4.93(b)(1) and 4.93(b)(2) has been initiated. Pending amendment of the regulations, vessels of Chile shall be permitted to transport the articles described in sections 4.93(b)(1) and 4.93(b)(2) between ports of the United States, effective from July 24, 1980.

(C.S.D. 81-107)

GSP: Acceptability of Form A Marked "Copy" for Purposes of Establishing Country of Origin Under the Generalized System of Preferences

Date: October 29, 1980
File: ENT-1-01: RRUEE
714570 JV

Re Decision on application for further review of protest No. 3901-0-000606, dated August 6, 1980.

Issue: Whether a Form A (Certificate of Origin) with the word "copy" super imposed on it is acceptable for purposes of establishing country of origin under the Generalized System of Preferences (GSP).

Facts: The merchandise consists of automobile parts from Taiwan. Duties were assessed because protestant failed to present the original Form A with the entry. The record indicates that the United States District Court has declared protestant a debto in possession and has ordered it not to make payment for the merchandise. As a result, the foreign seller refuses to release the original Form A. In lieu of the original, protestant has submitted a photocopy which your office has rejected. Protestant requests reliquidation of the entry on the basis that the copy is valid for GSP purposes.

Law and analysis: Section 10.173(a)(1) of the Customs Regulations requires that the Form A, as evidence of country of origin, be signed by the exporter of the merchandise in the country from which it is directly imported, certified by the designated governmental authority in that country, and properly executed.

While the above provision makes no reference to the filing of an original Form A, it has been the practice of Customs to require that the original be presented with the entry and copies returned to the exporter and certifying authority in the country of origin. Thus, the requirement for an original is an administrative rather than a legal requirement.

The facts in this case establish that the Form A presented with the entry is a valid copy of the properly executed original. Further, protestant's failure to furnish the original was not intentional or the result of negligence on its part, but rather occasioned by factors beyond its control. Under these circumstances, it is our opinion that Customs should accept the copy as evidence of the country of origin of the imported merchandise. Accordingly, you are directed to allow the protest in full.

Holding: Where the importer is unable to present the original Form A due to factors beyond his control, a valid copy is acceptable for purposes of establishing country of origin under the GSP. This holding does not extend to situations where the original Form A is lost, de-

stroyed or stolen. In such cases, the importer must obtain a duplicate from the appropriate governmental body in the country of origin as required by section 10.173(a)(2) of the Customs Regulations.

(C.S.D. 81-108)

Conditionally Free Merchandise: Aircraft Parts; Certification Requirement Under Civil Aircraft Agreement

Date: October 29, 1980
File: ENT-1-01 RRUEE
714576 M

This ruling concerns whether certain aircraft parts for use in a British plane in the development stage is entitled to duty free entry under the Civil Aircraft Agreement (Title VI of P.L. 96-39).

Issue: May aircraft parts imported into the United States for use in the manufacture of a British aircraft, which has not received a certificate of airworthiness from the British Civil Aviation Authority, but has received a letter from that agency approving the testing and development of such plane, be entitled to duty free entry under P.L. 96-39?

Facts: The British Civil Aviation Authority, which in Great Britain is equivalent to our Federal Aviation Administration, issued a letter of approval to manufacture, develop, and test a certain aircraft. The manufacturer of this aircraft wishes to import certain aircraft parts which would be used to manufacture this plane. Since the British Civil Aviation Authority has not issued a certificate of airworthiness for the aircraft model involved, the inquirer asks whether aircraft parts imported for use in such aircraft would qualify for duty free entry under the Civil Aircraft Agreement.

Law and analysis: Section 601 of Public Law 96-39, in pertinent part, provides that aircraft parts certified for use in civil aircraft and qualified under one of the listed item numbers of the Tariff Schedules may be imported free of duty. The term "certified for use" means that the importer shall file a written statement, accompanied by such supporting documentation as the Secretary of the Treasury may require, with the appropriate Customs officer stating that the imported article has been imported for use in civil aircraft, that it will be so used, and that the article has been approved for use by FAA or airworthiness authority in the country of exportation, if such approval is recognized by FAA as an acceptable substitute for FAA certification, or that an application for approval for such use has been submitted to, and accepted by FAA.

Basically, the language of the statute requires that the aircraft part must be certified for use in a civil aircraft. It does not require that such aircraft must have been issued a certification of airworthi-

ness. The Federal Aviation Administration, besides granting a certificate of airworthiness, also issues various types of certification and approvals of aircrafts and parts thereof which are being used for testing and development purposes. It is our view that aircraft parts to be used in an aircraft-certified or approved by the FAA under one of its certifications or letter of approval other than the certification of airworthiness would still qualify for duty free entry under the Civil Aircraft Agreement. This view was indicated in ORR Ruling 712568 M dated March 28, 1980.

Also, where another country, such as Canada, has a similar certification system as the FAA, we have recognized any such certifications and approvals issued by the airworthiness authority of that country for purposes of duty free entry under the Civil Aircraft Agreement. Although not specifically stated in ruling letter 712178 M dated February 12, 1980, the aircraft parts involved had been certified for use in an airplane which had been certified by the appropriate Canadian airworthiness authority for testing and development, but had not been issued by that agency a certification of airworthiness.

In this case, since the appropriate British airworthiness authority does not issue any certifications except a certification of airworthiness and since it has by letter approval permitted the development and testing of the aircraft involved, we believe that the aircraft parts for use in the manufacture of this plane are entitled to duty free entry under Title VI of the Civil Aircraft Agreement.

Holding: Aircraft parts imported into the United States for use in the manufacture of a British aircraft, which has not received a certification of airworthiness from the British Civil Aviation Authority, but has received a letter of approval from that agency for the testing and development of such plane are entitled to duty free entry under Title VI of P.L. 96–39.

(C.S.D. 81–109)

Classification: Stock/Receiver With Separate Barrels for Use as a Rifle or Shotgun

Date: October 30, 1980
File: CLA–2: RRUCGC 064848 JCH

To: District Director of Customs, 120 S. Central Avenue, St. Louis, Missouri.

From: Director, Classification and Value Division.

Subject: Request for internal advice No. 176/69, Supp. 1, concerning the tariff classification of a stock/receiver with separate barrels for use as a rifle or as a shotgun.

In your memorandum of April 11, 1980, you requested reconsideration of our previous decision with respect to the subject mer-

347-180 O - 81 - 6

chandise, dated February 8, 1980 (File No. 061614). This merchandise is imported from Belgium. Our response to your request follows:

Issue: In our previous decision we held that the merchandise in question was classifiable as an entirety under the provision for combination shotguns and rifles valued over $50 each in item 730.59, Tariff Schedules of the United States (TSUS). The current column 1 rate of duty required under this provision is 12.5 percent ad valorem. It is your contention that only the stock/receiver and rifle barrels should be regarded as an entirety and classified under the provision for rifles valued over $50 each in item 730.31, TSUS, dutiable at the current column 1 rate of 6.7 percent ad valorem. You then would classify the shotgun barrels separately under the applicable provision for shotgun barrels.

Facts: In your memorandum you describe the merchandise in question as the "Browning Superposed Continental" consisting of a stock and receiver, a set of .30/06 over/under rifle barrels and a set of 20 gauge over/under shotgun barrels. The sets of over/under barrels are attached alternately with the stock and receiver for use of two of the components as either a rifle or shotgun. The Continental, as noted in our previous decision, is sold in polystyrene cartons with cavities for each component.

Law and analysis: In reaching our previous conclusions regarding the classification of the merchandise at issue, we noted that the (corporation) an American manufacturer, previously produced a firearm very similar to the imported merchandise. This American product was similar even to the extent of the manner in which it was sold with the parts in compartmentalized boxes, although the instant merchandise is in plastic containers. Most importantly, we noted that the American product was marketed as a combination gun. You state that this information is incorrect and indicate that a representative of the (corporation) has led you to believe that at no time did that company ever market a gun of the type at issue as a combination shotgun and rifle. We further infer that you believe the information furnished by the (corp.) representative is supportive of your view that the use of the adjective "combination" with respect to shotgun/rifles was only used in the marketing of combinations of the over/under type.

However, a review of reproductions of pages of old (corporation) catalogs shows that a firearm of the type in question was offered for sale under the caption, ".300 Combination Rifle and Shotgun fn Case." [1] While we do not dispute the fact that combination guns oi the over/under type are also encompassed under the tariff provisions for combination guns in the tariff schedules, it is interesting to note

[1] 15-3 (1st ed. 1971).

that the (corporation) has not always, if ever, used the word "combination" in its catalog offerings of combination guns of the over/under type. A typical listing shows such a gun under the caption, "Over-and-Under Rifle Shotgun." [2] The (company) a division of (corp.) also used the same caption when it offered a similar over/under combination gun.[3] The first cited catalog listing is specific evidence that for American products, the term, "combination rifle and shotgun" has been a commercial designation for the class of merchandise of which the instant firearm is an exemplar. Accordingly, it is our view that the information you developed does not by itself show that item 730.59 is not an *eo nomine* or descriptive provision for merchandise of the type in question as well as for combination guns of the over/under type.

In this connection, you suggest that the legislative history of the provisions for combination guns shows that they are limited to combination guns of the over/under type. You contend the current provisions are a reenactment of earlier tariff provisions which were designed to overrule classifications which avoided classification of over/under combination guns under specific provisions for firearms, such as the classification in T.D. 13762 (1893). We infer that your view is that, in this instance, the rule that an *eo nomine* provision encompasses only articles contemplated at the time of enactment should prevail over the rule that a tariff provision encompasses all forms of an article.

The tariff laws, however, are written for the future and encompass new articles as they are developed. While the meaning of an *eo nomine* provision is determined as of the time of enactment, the meaning will embrace subsequently created articles when they fall within the definition. *J. E. Bernard & Co.* v. *United States*, 52 Cust. Ct. 56, C.D. 2436 (1964). Further, while the provisions for shotguns and rifles are clearly *eo nomine*, the word "combination" is more in the nature of a term of general description. Accordingly, we regard item 730.59 as a specific provision for the merchandise in question regardless of the narrowness of the scope in which you suggest the provisions for combination guns should be regarded as having been frozen in time as of 87 years ago. Further, if these provisions represent a corrective measure to resolve classification problems in establishing the dutiable status of combination guns, we believe it would frustrate the remedial legislative effort and intent if we held that the instant combination-article classification problem was not also covered by that legislative solution.

While you have further cited Summaries of Trade and Tariff Information as supportive of your position, we find nothing in the

[2] Id. at 16-7.
[3] Id. at 13-2.

language of those references to support the view that combination guns of the over/under type are encompassed within the provisions for combination guns to the exclusion of any other type of combination guns.

You further disagree that *United States* v. *Charles Garcia & Co.*, 48 CCPA 140, C.A.D. 780 (1961), which we cited, is pertinent to this matter. We cited that case as authority for the proposition that an aggregation of articles may be regarded as an entirety even though they are not all used together at the same time to achieve one of the functions of the aggregation. Specifically, you believe this precedent should be disregarded because no two components of the three components in question can ever be used jointly as a shotgun/rifle combination. This argument, however, begs the question since it presupposes that the combination gun provisions encompass only combination guns of the over/under type, a presupposition shown above to be unsustainable. While counsel for the importer has cited various cases pertinent to the separability for tariff classification purposes of spare parts, tools, etc. and to the requirement that parts of an entirety be used together, the *Garcia* case, *supra*, clearly shows that separate components constituting a single commercial entity do not have to be used together at the same time to constitute an entirety. Alternate use, as shown here and in the *Garcia* case, is sufficient.

Counsel has also cited General Headnote 10(d) and discussed the issues related to its applicability. This aspect of this matter was addressed by us in our previous decision, to which counsel is referred.

Holding: For the foregoing reasons our classification of the instant merchandise under item 730.59 is affirmed. The rate of duty in effect under this provision before January 1, 1980, is applicable to any pending entries of this merchandise made before that date.

Copies of this decision should be made available to the interested parties.

(C.S.D. 81–110)

Classification: Dionosil Oily, a Bronchographic Contrast Medium Used To Coat the Bronchial Walls

Date: October 30, 1980
File: CLA-2-RRUCGC 064882 JH

This is in reference to your request that a change of classification action be initiated in regard to Dionosil Oily.

Facts: Dionosil Oily, a bronchographic contrast medium, is said to coat the bronchial walls and provide improved visualization. It is composed of a suspension of propylidone in peanut oil. Propyliodone is usually derived from a benzenoid source. In September 1970, Customs ruled that Dionosil Oily was classified as a benzenoid intermediate in item 403.60, Tariff Schedules of the United States (TSUS). At that time, while it was known that that product contained propylidone, it was not known that it was suspended in peanut oil. That decision was issued to an apparent subsidiary (name) of (name) the company involved with the importations in issue.

The record shows that there were entries made in 1973 and 1974 which were liquidated under the provision for nonbenzenoid drugs in item 439.50, or if in dosage form, item 440.00, TSUS.

Evidence received from Customs ports reflects that there are currently 40 open entries for the period from April 1974 through December 1977. Subsequent to 1977, although entries were made under item 439.50 or item 440.00, they were all liquidated under the provision for benzenoid mixtures in item 403.90.

Issue: It is contended that entries made prior to 1974 under item 439.50 or item 440.00 created a uniform and established practice of classification. Since there are 40 entries dating from April 1974 through December 1977 which have not been liquidated, the question concerns the classification of these entries.

Law and analysis: Under section 315(d) of the Tariff Act of 1930, as amended, "No administrative ruling resulting in the imposition of a higher rate of duty or charge than the Secretary of Treasury shall find to have been applicable to imported merchandise under an established and uniform practice shall be effective [without notice]."

In this case, notice was given to an apparent subsidiary of the company in 1970 that the product was benzenoid. The record shows that in 1973 and 1974 some entries were liquidated under items 439.50, TSUS. However, entries from those years and those subsequent to 1977, even though entered under item 439.50, were liquidated under item 403.90, TSUS. If an established practice does exist presently in regard to Dionosil Oily, it is as a benzenoid mixture. The file reflects that notice was provided in 1970. So that the importer was aware or should have been aware of the correct classification.

Holding: An established and uniform practice does not exist under which Dionosil Oily is classifiable in item 439.50 or 440.00, TSUS.

The entries of Dionosil Oily dating from 1974 through 1977 which have not been liquidated are correctly classifiable in item 403.90 TSUS.

(C.S.D. 81–111)

Classification: Antimony Trioxide With 3 Percent Diisodecyl Phthalate (DIDP)

Date: October 30, 1980
File: CLA–2:RRUCGC
066407 JH

Your letter of August 6, 1980, concerns the dutiable status of antimony trioxide with 3 percent diisodecyl phthalate (DIDP).

It is asserted that the wetting agent is used to meet local dusting requirements and it is not essential to the commercial use of antimony trioxide. A statement from (Name) is to the effect that the additive is not essential to the use of antimony oxide as a flame retardant in vinyl compounds, but that the wetting of the material with DIDP is intended to control dusting to meet local standards. A laboratory report describes the product as a mixture of an inorganic compound (antimony oxide type) and approximately 2–3 percent benzenoid plasticizer.

Where a product contains commercially small quantities of benzenoid ingredients which play no part in the principal function of the product as a whole, or exhaust their utility prior to the performance of the principal function, the *de minimis* rule may be invoked. However, when commercially small quantities of benzeniod ingredients operate continuously or concurrently to assist or enhance the principal function of the product, the benzenoid component may not be ignored for classification purposes.

While the DIDP will reduce the amount of antimony trioxide dust developed during the manufacturing of polyvinyl products, the technical literature indicates that DIDP is a common plasticizer for such products. When used at the stated concentrations, it may act as a dispersant for the antimony trioxide powder during the manufacture of plastics. The plasticizer, therefore, aids in the thorough distribution of the powder throughout the final product, thus maximizing its fire retardant effect.

Accordingly, since the DIDP operates continuously and concurrently to assist or enhance the principal function of the product, it cannot be ignored for classification purposes.

Accordingly, antimony trioxide coated with diisodecyl phthalate is classifiable under the provision for benzenoid mixtures in item 413.51, Tariff Schedules of the United States (TSUS). The rate of duty is 23 percent ad valorem, but not less than the highest rate applicable to any component material. Diisodecyl phthalate is classifiable as a benzenoid plasticizer in item 409.34, TSUS. The rate of duty is 1.5 cents per pound plus 17.7 percent ad valorem.

(C.S.D. 81-112)

Classification: Dutiable Status of Butynediol and Butanediol

Date: October 30, 1980
File: CLA-2:RRUCGC
066470 JH

Your letter of August 4, 1980, concerns the dutiable status of butynediol and butanediol from West Germany.

Butynediol is classifiable under the provisions for other polyhydric alcohols in item 428.47, TSUS. The rate of duty is 12.3 percent ad valorem.

Butanediol is classifiable under the provision for butylene glycol in item 428.30, TSUS. The rate of duty is 11.5 percent ad valorem.

(C.S.D. 81-113)

Classification: PY61H, Chemical Product Used as a Copper Plating Bath Additive

Date: October 30, 1980
File: CLA-2:RRUCGC
066563 JH

Your letter of August 13, 1980, concerns the dutiable status of a chemical product, which it is assumed is a product of a country entitled to modified rates of duty.

PY61H is described as an aqueous solution of dipotassium salt of 2,5-dimercapto-1,3,4-thiadiazole. It is stated that the product is used as an additive to a copper plating bath.

This product is classifiable under the provision for nitrogenous compounds, thiocarbamates, in item 425.36, Tariff Schedules of the United States (TSUS). The rate of duty is 4.8 percent ad valorem. For 1981, it is 4.7 percent ad valorem.

(C.S.D. 81-114)

Classification: Armonol, a Product Designed To Increase Gas Mileage

Date: October 30, 1980
File: CLA-2:RRUCGC
066969 JH

This is in reference to your inquiry concerning the dutiable status of "Armonol," a product of England.

The product is described as being designed to increase gas mileage. While the complete composition of the product was not given, all of

the chemicals listed, which were said to comprise over "50 percent of the chemical makeup of "Armonol," are benzenoid. They are all classifiable in part 1(B), Schedule 4, Tariff Schedules of the United States (TSUS), the benzenoid schedule.

Contrary to your impression that the benzenoids are a minor part of the mixture and not essential to the function of the total product, one benzenoid is said to be added because it keeps carburetors and engine parts clean, and another benzenoid is said to be commonly known as an additive for mileage extention.

Not only does it appear that the benzenoid components are essential to the principal use of this product, but in any event, since they comprise over 50 percent of the total product, they cannot be ignored for classification purposes.

Based on the composition of the product, Armonol is classifiable under the provision for benzenoid mixtures in item 407.15, TSUS. The rate of duty is 1.7 cents per pound plus 13.6 percent ad valorem, but not less than the highest rate applicable to any component material.

Since the entire composition of Armonol was not provided, the highest rate of duty for a component cannot be provided with any certainty.

However, the rate for the benzenoids listed are as follows:

Item:	*Rate of duty*
402.68	1.2 cents per pound plus 26.3 percent ad valorem.
404.48	0.7 cent per pound plus 13.4 percent ad valorem.

(C.S.D. 81-115)

Entry: Envelopes Made and Printed for the United Nations by a West German Firm

Date: October 31, 1980
File: ENT-1-01-RRUEE
714317 M

The ruling concerns whether United Nations "first day covers" imported by the United Nations for sale by its Postal Service are entitled to duty-free entry.

Issue: Are U.N. "first day covers" imported by the U.N. for sale by its Postal Service entitled to duty-free entry under the 1951 Postal Agreement between the United Nations and the United States?

Facts: The United Nations has imported several shipments of U.N. "first day covers." These envelopes were made and printed for the

United Nations by a West German firm. The majority of these "first day covers" are to be sold by the U.N. through its Postal Service in New York. The remainder are to be returned to West Germany.

The shipments involved arrived at New York by air and were transported in-bond to a printer in Baltimore for cancellation purposes. Once this has been accomplished the first day covers will be forwarded to the U.N. Postal Service in New York.

Customs has ruled that for classification purposes "first day covers" are considered to be more than mere postage stamps and are dutiable as printed matter. The United Nations contends that the "first day covers" involved are entitled to duty-free entry under the 1951 Postal Agreement between the United Nations and the United States which modified the Convention on the Privileges and Immunities of the United Nations adopted by the General Assembly of the United Nations (of which the United States is a member) on February 13, 1946.

Law and analysis: Section 7 (b) of the Convention on the Privileges and Immunities of the United Nations provides that the United Nations, its assets, income and other property shall be exempt from Customs duties and prohibitions and restrictions on imports and exports in respect of articles imported or exported by the United Nations for its official use. This section further states that: "It is understood, however, that articles imported under such exemption will not be sold in the country into which they were imported except under conditions agreed with the Government of that country."

Section 3 of the Postal Service Agreement between the United Nations and the United States, effective October 24, 1951, modified section 7(b) of the Convention on the Privileges and Immunities of the United Nations by providing for the sale of United Nations postage stamps by the United Nations Post Office Station. Provision (i) of section 3 states that all revenue derived from such sale of U.N. postage stamps and from other services rendered by the U.N. Post Office Station shall be retained by the U.S. Post Office Department for performance of the latter's obligations under the terms of this Agreement, except for postal services resulting from the use of United Nations postage stamps sold for philatelic purposes. Provision (ii) of section 3 provides for the sale of United Nations postage stamps for philatelic purposes in response to orders received by mail. All revenue derived from such philatelic sales of U.N. postage stamps shall be retained by the U.N. for its own use, except that the U.S. Postal Service is to be reimbursed the face value of any such stamps used as postage.

A "first day cover" consists of the postage stamp along with the envelope designed to depict the event or personage for which the

postage stamp was issued and the first day of cancellation of that stamp. These "first day covers" are collected by philatelists.

We believe that the term "postage stamps for philatelic purposes" used in provision (ii) of section 3 when in context with the entire section which speaks of revenue derived from sales of postage stamps and other services rendered by the United Nations and when considered in view of the purpose of "first day covers" includes "first day covers." Therefore, the shipments of "first day covers" involved are exempt from customs duties.

Holding: U.N. "first day covers" imported by the U.N. for sale at its Postal Station are exempt from customs duties pursuant to Section 3 of the Postal Service Agreement between the United Nations and the United States effective October 24, 1951.

(C.S.D. 81-116)

Carrier Control: Refund of Special Tonnage Tax and Light Money Assessed on a Vessel Pursuant to 46 U.S.C. 121 and 128

Date: November 6, 1980
VES-11-11
File: VES-11-10-RRUCDC
104883HS

Your memorandum of September 11, 1980 transmitted the application of Vessel owner filing under section 4.24, Customs Regulations, for the refund of special tonnage tax and light money assessed pursuant to title 46, United States Code, sections 121 and 128 on the Vessel.

On July 24, 1979, Vessel owner paid special tonnage tax and light money totalling $2,780 on the Vessel a vessel of British registry with its home port in the Bahamas (CF 1002, 1486650). For special tonnage tax and light money purposes, the nationality of a vessel of British registry with a home port in the Bahamas is Bahamian.

Title 46, United States Code, section 8, provides, inter alia, that whenever any charge arising under the laws relating to vessels or seamen has been paid to any collector of customs, and application has been made within one year from such payment for the refunding or remission of the payment, the Commissioner of Customs has the power to refund so much of the charge as he thinks proper if upon investigation, he finds that such charge was illegally, improperly or excessively imposed.

Any application for refund of tonnage tax pursuant to section 8 of title 46 must be made according to section 4.24, Customs Regulations.

Section 4.24(e), Customs Regulations, requires that an application for a refund of tonnage tax include:

> . . . a certificate by the owner or by the owner's agent that payment of tonnage tax at the applicable rate has been or will be made for each entry of the vessel on a voyage on which that rate is applicable before the end of the current tonnage year, exclusive of any payment which has been refunded or which may be refunded as a result of such application.

The certificate required in section 4.24(e) was included with the application for refund and a copy was transmitted to us with your memorandum.

The applicant applied for a refund on June 4, 1980. This is in compliance with section 8 of title 46 and section 4.24(c), Customs Regulations, requiring the applicant to apply for a refund within one year from the date of payment.

Treasury Decision 79-304, published in the Federal Register on December 7, 1979 (44 FR 70458), and effective retroactively on February 9, 1979, exempts vessels of the Bahamas from the payment of special tonnage tax and light money. The taxes in question were paid on July 24, 1979. Accordingly, the taxes are refundable pursuant to 46 U.S.C. 8 because special tonnage tax and light money are improperly imposed on a vessel when assessed at a time that a vessel is exempt from their payment. Therefore, refund of special tonnage tax and light money in the amount of $2,780.00 ($2,835.60, amount tonnage tax paid less $55.60, regular tonnage tax at $.02 per ton) is authorized and should be made in accordance with the provisions of section 4.24, Customs Regulations.

(C.S.D. 81-117)

Carrier Control: Various Methods of Shipping Petroleum Coke Between U.S. Ports Through Canada in a Canadian Vessel

Date: November 7, 1980
File: VES-3-07-RRUCDC
104910 HS

To: District Director of Customs, Buffalo, New York.
From: Director, Carriers, Drawback, and Bonds Division.
Subject: I.A. 172/76.

I.A. 172/76 dated December 16, 1976, received in Headquarters March 28, 1980, and in this Division on October 6, 1980, concerns the applicability of the Jones Act (46 U.S.C. 883) to various methods of shipping petroleum coke from Chicago to Niagara Falls, New York,

through Canada with a Canadian-flag vessel transporting the merchandise for a leg of the journey.

Issue: Whether any of the proposed methods of shipping petroleum coke from Chicago to Niagara Falls, New York, through Canada described below would violate the coastwise trade laws?

Facts: 1. Company A, a United States corporation, purchases coke in Chicago, Illinois, and transports it by Canadian flag vessel to its Canadian division in Thorold, Ontario, Canada. There the coke is transferred to the Canadian-owned trucks of Company B, a Canadian firm, which ships the coke back to Company A in Niagara Falls, New York. A Canadian consumption entry rather than a bond is utilized in Canada.

2. Company B, the Canadian firm, purchases coke in Chicago pursuant to an order from Company A, the U.S. corporation, and imports the coke into Canada by Canadian-flag vessel. Company B then transfers the coke to its own trucks for shipment to Company A in Niagara Falls. Canadian and U.S. consumption entries are made, with Company B shown on the invoices as the Canadian transactor.

3. Company B, the Canadian firm, which sells coke to both Canadian and U.S. markets, purchases the coke in the United States and imports it into Canada by Canadian-flag vessel where it mixes the coke with its own stock. Company A, the U.S. corporation, buys coke from Company B and is supplied from this stock that includes the material of U.S. origin. Shipment to Company A is made by Company B's Canadian-owned trucks. A U.S. consumption entry is made showing a sale from Company B to Company A.

Law and analysis: Section 27 of the Merchant Marine Act of 1920 (46 U.S.C. 883) in general provides that no merchandise shall be transported between points embraced within the coastwise laws of the United States ("coastwise points") directly or by way of a foreign port, or for any part of the transportation, except in a vessel built in the United States, owned by a citizen of the United States and documented under the laws of the United States.

The Attorney General of the United States addressed an issue involving the transportation of grain on a Canadian vessel from either Chicago or Milwaukee to Georgian Bay, Canada, where it was unladen and stored in elevators for an indefinite time. It was subsequently loaded into railroad cars and delivered to a port in the United States. It was ruled that where the grain is transported on a Canadian vessel, from a U.S. port to a Canadian port, with a present existing intention that the grain ultimately should be transported to another U.S. port, "such transportation [by the Canadian vessel] is without a doubt in violation of section 27 of the Act of June 5, 1920 [46 U.S.C. 883] . . . ."

The Attorney General went on to say:

> . . . the transportation is not complete until the grain reaches its ultimate destination, and when it reaches an American port for reentry into the United States the violation . . . is . . . complete.

34 Op. Atty. Gen. 355 (1924)).

A transportation from one point to another remains continuous, so long as intent remains unchanged, no matter what stoppages or transshipments intervene (*The Bermuda* 70 U.S. 514 (1865)). Expectation at the time of lading merchandise in the United States that part of the merchandise so laden will not be sold in Canada, but will be brought back to the United States is considered evidence of intention to transport part of the cargo between coastwise points. Further, as stated in *The Bermuda*, cited above, " . . . even the landing of goods and payment of duties does not interrupt the continuity of the voyage of the cargo, unless there is an honest intention to bring them into the common stock of the country."

In the three proposed methods of shipping coke from Chicago to Niagara Falls through Canada, there is not an honest intention to bring the coke into the commerce of Canada. In the first two proposed methods, there is no doubt that there is an intent on the part of the shipper that the coke ultimately should be transported to an American port. The transportation of the coke is not complete until it reaches its ultimate destination, Niagara Falls, New York.

Even in the third proposed method, where the Canadian shipper takes title to the United States coke and commingles it with its own stock in Canada before selling it in the United States, there is not a breakdown of the continuity of the transportation. In the Attorney General's opinion cited above, it was held that although the grain was intermingled with other American grain, some for possible use for domestic consumption in Canada, there was nevertheless a violation of section 883, as there was an intention that the grain ultimately should be transported to a U.S. port, and that intent was subsequently carried out. Notwithstanding the fact that an indeterminable portion of the United States coke may be distributed and used in Canada, the shipper's expectation at the time of lading the coke in the United States that a portion of it will be transported back to the United States indicates a clear intention to ship the United States coke from one coastwise point through Canada to another coastwise point.

Holding: All three of the proposed methods of shipping petroleum coke from Chicago to Niagara Falls, New York, through Canada with a Canadian flag vessel transporting the merchandise for a leg of the journey would violate 46 U.S.C. 883.

(C.S.D. 81-118)

Manipulation in Bonded Warehouse: Assembly of Watch Heads and Repackaging of Spare Watch Parts as Manipulation Under 19 U.S.C. 1562

Date: November 7, 1980
File: WAR-3-RRUCDB SMC 211711

Issue: Whether the assembling of watch heads with the use of watch movements, and the repackaging of spare watch parts constitute manipulations within the meaning of section 562, Tariff Act of 1930, as amended (19 U.S.C. 1562).

Facts: The first proposed operation involves the importation of foreign watch movements for entry into a manipulation warehouse. The watch movements will be placed into United States and foreign-made watch cases. When the cased movements known as watch heads are ready for sale, they will be withdrawn from the warehouse and duties will be paid on the foreign watch movements and cases.

The second proposed operation involves the importation of spare parts for use in watch service and repair. Once in the bonded warehouse the spare parts will be repackaged for future resale. Upon withdrawal some of the spare parts will be exported to Canada while the remainder will be domestically consumed. Duties will be paid on those withdrawn for domestic sale.

Law and analysis: Title 19, United States Code, section 1562, provides that merchandise may be cleaned, sorted, repacked, or otherwise changed in condition, but *not manufactured*, in a bonded warehouse established for that purpose, and be withdrawn therefrom for exportation without the payment of duties, or for consumption, upon payment of the duties accruing thereon, in its condition and quantity, and at its weight, at the time of withdrawal from the warehouse. (Emphasis added.)

The question of what constitutes a manufacture will be addressed in order to determine if either of the proposed operations is prohibited in a manipulation warehouse. The Supreme Court held in *Anheuser-Busch Brewing Association* v. *U.S.*, 207 US 556 (1908), that a manufacture occurs when a new and different article emerges from the processing, having a distinctive name, character, or use. With this definition as a guideline, Customs has held that the placement of foreign watch movements into watch cases constitutes more than a mere manipulation but rather a manufacturing process. The proposed manufacture of watch heads would therefore be prohibited in a class 8 manipulation warehouse.

The second proposed operation, the repackaging of imported spare parts, is clearly a manipulation as provided for in 19 U.S.C. 1562 and thus permitted in a manipulation warehouse.

Holding: The assembly of watch heads with the use of watch movements and cases does not constitute a manipulation within the meaning of 19 U.S.C. 1562. The repackaging of spare watch parts does, however, constitute such a manipulation.

(C.S.D. 81-119)

Merchandise Control: Removal of Zone-Restricted Merchandise From a Foreign Trade Zone by Means of a TIB Entry Pursuant to Part 146 of the Customs Regulations

Date: November 12, 1980
File: FOR-2-04-RRUCDB
210977 L

Issue: May zone-restricted merchandise be removed from a Foreign-Trade Zone (FTZ) by means of a temporary admission under bond (TIB) entry?

Facts: There are no specific facts. The issue is raised in connection with a request for clarification of Legal Determination 79-0279 (CON-9-R:CD:D WR, 209800, dated April 2, 1979).

Law and analysis: Legal Determination 79-0279 held, in part, that merchandise may be entered into the Customs territory from a FTZ by a TIB entry. That holding was based upon an analysis of Part 146, Customs Regulations (19 CFR 146). The analysis noted that section 146.31(a), Customs Regulations (19 CFR 146.31(a)), prohibits removal of merchandise from a FTZ except as provided elsewhere in Part 146, and that there is no provision in Part 146 for removal by TIB entry.

It concluded that there was no valid reason to prohibit removal of merchandise from a TIB entry and suggested that the reason there is no specific provision for such removal is that TIB's in the past have been referred to as consumption entries for various purposes.

The ruling omitted a "Facts" section. The facts originally submitted are as follows:

> An importer puts machine parts into a FTZ in a nonprivileged foreign status. Later, they would like to remove the parts from the FTZ on a TIB entry to have work done on the parts and then export them to close the TIB. Subpart E of Part 146 of the Customs Regulations is entitled "Removal of Merchandise from a Zone". This subpart covers the procedures and methods by which merchandise in a FTZ may leave. Nowhere in this

subpart is a TIB entry mentioned as one method by which merchandise may leave a FTZ. This may indicate that a TIB is not an appropriate means of taking merchandise out of a FTZ.

On the other hand, this subsection does not specifically prohibit taking merchandise out of a zone on a TIB. Since a TIB is an approved means of bringing merchandise into the Customs territory of the United States, taking merchandise out of a foreign-trade zone on a TIB may be appropriate.

The facts originally submitted specifically referred to Subpart E of Part 146 of the Customs Regulations. Section 146.47 provides for the transfer of zone-restricted merchandise into Customs territory. Section 146.47(a), Customs Regulations (19 CFR 146.47(a)), provides in part that zone-restricted merchandise may be returned to Customs territory only for entry for exportation, entry for transportation and exportation, destruction, transfer from one zone to another, or for delivery to a qualified vessel or aircraft as ground equipment, unless the Foreign-Trade Zones Board has ruled that the return of the merchandise to Customs territory for domestic consumption is in the public interest. If the return of zone-restricted merchandise to Customs territory for domestic consumption has been ruled by the Foreign-Trade Zones Board to be in the public interest, it may be entered for consumption, for warehousing, or for immediate transportation without appraisement, unless the Board has specified which of these forms of entry shall be made.

Accordingly, since TIB's have been referred to as consumption entries for various purposes, we see no objection to entering zone-restricted merchandise into the Customs territory from a FTZ by a TIB entry if the Foreign-Trade Zones Board has ruled that the return of the merchandise to Customs territory is in the public interest and has not specified that an entry other than a consumption entry shall be made.

If the Foreign-Trade Zones Board has not ruled that zone-restricted merchandise may be returned to the Customs territory, of course, entry is limited to those forms of entry specified in section 146.47(a), Customs Regulations (19 CFR 146.47(a)), which does not include entry under TIB.

As noted in Legal Determination 79–0279, where a TIB entry is permissible, the date of importation is the date defined by section 101.1(h), Customs Regulations (19 CFR 101.1(h)).

Holding: Zone-restricted merchandise may be removed from a FTZ by a TIB entry if the Foreign-Trade Zones Board has ruled that return of the merchandise to the Customs territory is in the public interest and has not specified that an entry other than a normal consumption entry shall be made. The date of importation in such a case

is the date as defined in section 101.1(h), Customs Regulations (19 CFR 101.1(h)).

(C.S.D. 81-120)

Merchandise Control: Person or Firm Not Proprietor of Customs Bonded Warehouse or Container Station Designated as Private Carrier for Transfer of Merchandise to FTZ

Date: November 12, 1980
File: BON-1-RRUCDB L 212084

Issue: May a person or firm not the proprietor of a Customs bonded warehouse or bonded container station be designated as a private carrier for transfer of merchandise to a foreign-trade zone (FTZ)?

Facts: An importer asks whether a person or firm who has no Customs bonded warehouse or bonded container station, either at the port of origin or destination, may be designated as a private carrier when the merchandise is intended for deposit in a FTZ.

Law and analysis: Section 18.1(a)(1), Customs Regulations (19 CFR 18.1(a)(1)), provides in part that merchandise to be transported from one port to another in the United States in bond shall be delivered to a . . . private carrier bonded for that purpose.

Section 112.1(g), Customs Regulations (19 CFR 112.1(g)), defines a "private carrier" as a carrier of his own goods or merchandise.

Section 112.11(a)(4) (i) to (iii), provides that private carriers may be authorized to receive merchandise for transportation if: (i) The private carrier is the proprietor of a Customs bonded warehouse or bonded container station; (ii) The merchandise (including containerized merchandise) to be transported is his property, having been imported by him or purchased from another importer; and (iii) The merchandise is to be transported:

(A) From the port of importation, or port where entered for warehouse, to the private carrier's Customs bonded warehouse or bonded container station for physical deposit;

(B) From the private carrier's Customs bonded warehouse or bonded container station to another Customs bonded warehouse for physical deposit; or

(C) If for exportation, from the private carrier's bonded warehouse or bonded container station to a Customs bonded warehouse at a port of exportation.

Accordingly, since the person or firm desiring to be designated as a private carrier is not the proprietor of a Customs bonded warehouse or bonded container station, and is not transporting the merchandise from the port of importation or port where entered for warehouse

to the private carrier's bonded warehouse or bonded container station, he or it may not be designated as a private carrier.

On October 27, 1980, a proposed rule was published in the Federal Register (Vol. 45, No. 209, page 70907) to amend the Customs Regulations to simplify the requirements that a private carrier must meet to be designated as a carrier of bonded merchandise. Basically, the proposed amendment would provide that a private carrier may be designated as a carrier of bonded merchandise if (1) the merchandise transported is the property of the private carrier, and (2) the private carrier files a proper Customs bond. A copy of the proposed rule is attached.

Holding: Under existing Customs Regulations, a person or firm not the proprietor of a Customs bonded warehouse or bonded container station may not be designated as a private carrier to transport merchandise to a FTZ.

Possible alternative: Pursuant to 19 U.S.C. 1553, in places where no bonded common carrier facilities are reasonably available, merchandise may be transported otherwise than by a bonded common carrier. The procedure in such situations is set out in section 18.20(b), Customs Regulations (19 CFR 18.20(b)).

Recent Unpublished Customs Service Decisions

The following listing of recent administrative decisions issued by the Office of Regulations and Rulings, U.S. Customs Service, and not otherwise published, is published for the information of Customs officers and the importing community. Although the decisions are not of sufficient general interest to warrant publication as Treasury Decisions, the listing describes the issues involved and is intended to aid Customs officers and concerned members of the public in identifying matters of interest which recently have been considered by the Office of Regulations and Rulings.

A copy of any decision included in this listing, identified by its date and file number, may be obtained in a form appropriate for public distribution upon written request to the Office of Regulations and Rulings Attention: Legal Reference Area, Room 2404, U.S. Customs Service, 1301 Constitution Avenue, N.W., Washington, D.C. 20229 These copies will be made available at a cost to the requester of $0.10 per page. However, the Customs Service will waive this charge if the total number of pages copied is 10 or less.

Decisions listed in earlier issues of the Customs Bulletin, through February 2, 1981 are available in microfiche format at a cost of $30.90 ($.15 per sheet of fiche). It is anticipated that additions to the microfiche will be made quarterly and subscriptions are available. Requests for the microfiche now available and for subscriptions should be directed to the Legal Reference Area. Subscribers will automatically receive updates as they are issued and will be billed accordingly.

Dated: May 19, 1981.

B. JAMES FRITZ,
Director,
Regulations and Information Division.

Date of decision	File No.	Issue
4-27-81	105090	Vessels: towing of an American vessel by a foreign tug between U.S. ports is a violation of 46 U.S.C. 316(a)
5- 4-81	105118	Vessels: dutiable status of U.S.-caught fish processed on a foreign-flag processing vessel
4-22-81	060870	Classification: red pepper pieces (161.83)

Date of decision	File No.	Issue
1-23-81	061631	Classification: oil well casing (610.40, 610.43)
4- 3-81	061774	Classification: ladies sandals (700.60)
4-15-81	064951	Classification: lattice steel towers (609.84, 646.54, 646.70, 653.00, 657.25, 923.51)
4-30-81	065010/ 061745	Classification: yarn pompoms (737.22, 737.40, 737.95)
4- 8-81	065289	Classification: camping stoves (653.52, 657.35)
4- 9-81	065416	Classification: cotton skirt (382.06)
4- 8-81	065425	Classification: insulation blowing machine (678.50)
4-30-81	065445	Classification: man's sandal (700.60)
4- 3-81	065500	Classification: electric typewriter (676.05)
3-31-81	065518	Classification: motocross boot (700.58, 700.60)
4-23-81	065559	Classification: moonboot shells (700.60, 700.75)
4- 9-81	065598	Classification: vanity tops and cabinets (727.35, 727.47, 757.50)
4-21-81	065627	Classification: steel tool joints (606.71)
5- 4-81	065670	Classification: moonboot shells (700.60)
4-29-81	065671	Classification: moonboot shells (700.60)
4-10-81	065762	Classification: MUD isopipe (678.35)
4-15-81	065864	Classification: heater/dryer (661.88)
4-13-81	065885	Classification: cotton woven raincoats with stitched down folds (382.12)
4- 7-81	065896	Classification: light rail vehicles or cars (690.40)
4- 8-81	065969	Classification: mast, spars and boom for pleasure boats (696.15, 770.10)
4- 8-81	065983	Classification: rubber weatherstripping material (770.80)
4-10-81	066132	Classification: black cylindrical foam rubber articles with hollow cores (770.70, 770.80)
4-13-81	066776	Classification: methanol (427.96)
4-14-81	066815	Classification: sneaker uppers (386.04)
4-22-81	066843	Classification: athletic footwear (700.60)
4-21-81	066949	Classification: plastic match holders (706.60, 735.20, 772.20, 772.85)
4-17-81	068002	Classification: miniature furniture (737.95)
4- 8-81	068029	Classification: rainboots (700.51)
4- 6-81	068034	Classification: polyester roofing material (355.25)
4- 7-81	068052	Classification: alloy steel bars (606.97, 606.99)
4- 7-81	068106	Classification: calf resuscitator (709.45, 870.40)
4-10-81	068121	Classification: preplasticizing machine (661.68, 678.35)
4-23-81	068124	Classification: artist's ink (474.08)
4- 7-81	068159	Classification: knit cotton T-shirt with small electric lights (382.00)
4-15-81	068198	Classification: man-made fiber yarns (310.90, 310.91)
4-29-81	068202	Classification: cotton jackets (380.09, 380.12)
3-31-81	068206	Classification: athletic shoes (700.60, 761.00)
4-17-81	068337	Classification: denim jeans (382.00)
4- 8-81	068342	Classification: cooking brandy (182.46)
3-27-81	542381	Classification: dutiable status of elements of a CIF delivered price under the TAA

Date of decision	File No.	Issue
4- 1-81	800218	Classification: chars (493.26)
3-17-81	800240	Classification: rhinestone banding and temporarily strung rosemontees (741.35, 741.50)
4- 2-81	800266	Classification: room deodorants and vinyl gloves (460.85, 493.26, 705.83)
4- 2-81	800275	Classification: women's cotton woven blouse (382.33)
3-31-81	800276	Classification: hospital surgical scrub suit (382.33)
4- 7-81	800286	Classification: magnifying lens with frame and mountings (680.12, 708.91)
4- 7-81	800291	Classification: transducer (734.20)
3-31-81	800302	Classification: oily toordhaal or oiled split pigeon peas (141.55)
4- 1-81	800304	Classification: iron or steel clutch purse closures (652.88, 657.25)
4- 7-81	800305	Classification: acrylic bath, table and desk accessories (544.51, 715.15, 750.70, 756.04, 756.06, 756.10, 772.03, 772.06, 772.09, 772.15, 772.25)
4- 7-81	800308	Classification: pocket flashlight/lock de-icer (688.45, 740.38)
4- 2-81	800311	Classification: plastic mulch (870.40, 870.45)
4- 2-81	800318	Classification: data processor (676.15, 676.30, 710.80)
4- 7-81	800320	Classification: clump weights and buoyancy tanks (652.35, 696.60)
3-31-81	800321	Classification: roofing asphalt (521.11)
3-26-81	800325	Classification: men's knit shirts (380.81)
3-26-81	800330	Classification: combination calculator musical instrument (688.45)
4- 7-81	800331	Classification: man's shirt (380.84)
4- 2-81	800338	Classification: home brew kit (132.20, 132.30, 192.25, 413.51, 455.06)
4- 7-81	800339	Classification: variously processed frozen fish (110.15, 110.35, 110.47, 110.50, 110.55, 110.70)
3-31-81	800341	Classification: bone extracts (183.05)
3-31-81	800350	Classification: man's nylon woven jacket (380.04, 380.84)
3-26-81	800358	Classification: scouring pad (389.40)
4- 3-81	800360	Classification: yuca chips, plantain chips, tortilla or corn chips (141.88, 149.15, 183.05)
4- 3-81	800363	Classification: polyvinyl chloride pressure sensitive sheeting (771.43, 790.55)
4- 7-81	800375	Classification: man's woven nylon jacket and boy's polyester woven shorts (380.04)
4- 7-81	800385	Classification: man's woven cotton corduroy jeans (380.39)
4- 7-81	800387	Classification: elliptical head (609.80)
4- 7-81	800390	Classification: acrylic resin varnish (474.46)
4- 7-81	800392	Classification: tank trucks and tank bodies (692.02, 692.03, 692.20, 692. 21, 945.69)
4- 7-81	800396	Classification: bicycle safety light alarm (688.45)

Date of decision	File No.	Issue
4– 7–81	800406	Classification: microcomputer handbook (270.25)
4– 7–81	800408	Classification: truck attachment hydraulic scissor lift (660.85, 692.20)
4–10–81	800423	Classification: man-made fiber yarn (310.50)
4– 7–81	800425	Classification: assembly systems table used for assembling printed circuit boards (678.50)

Decisions of the United States Court of Customs and Patent Appeals

CANADIAN TARPOLY CO., APPELLANT *v.* UNITED STATES INTERNATIONAL TRADE COMMISSION AND SEALED AIR CORPORATION, APPELLEES

Investigation No. 337-TA-56

On Motion To Intervene

Appeal No. 81-11

Fred S. Whisenhunt, attorney for Canadian Tarpoly Co.
Christine Bliss and *Michael Stein*, attorneys for ITC.
Lawrence I. Lerner, attorney for Sealed Air Corp.

Before MARKEY, *Chief Judge*, RICH, BALDWIN, MILLER, and NIES, *Associate Judges*.

MILLER, *Judge*.

Sealed Air Corporation ("Sealed Air") moves to intervene in Appeal No. 81-11, pending before this court, as a party appellee. We grant the motion.

BACKGROUND

Appeal No. 81-11 involves a petition to the United States International Trade Commission ("ITC") filed November 7, 1980, wherein Canadian Tarpoly Co. ("Tarpoly") requested that ITC declare invalid its June 30, 1979, order issued in Investigation No. 337-TA-56, conducted under sections 337 and 337a of the Tariff Act of 1930, as amended (19 USC 1337 and 1337a). *In re Certain Multicellular Plastic Film*, 206 USPQ 244 (USITC 1979). In its petition, Tarpoly complained that ITC's order:

(a) exceeded the statutory authority and jurisdiction of ITC provided by sections 337 and 337a;
(b) unlawfully extended the patent monopoly of U.S. Patent No. 3,416,984 ('984), assigned to Sealed Air, the patent subject matter of the investigation;
(c) resulted in an unconstitutional taking of petitioner's (Tarpoly's) property without due process of law; and
(d) was arbitrary and capricious.

By letter of December 10, 1980, ITC denied Tarpoly's petition and refused to rescind its order. Hence Appeal No. 81–11 was filed February 6, 1981.[1]

In Appeal No. 81–11, Tarpoly contends that ITC's December 10 letter was a final decision and repeats the grounds set forth in its petition. Sealed Air's motion to intervene in this appeal was filed March 12, 1981. ITC does not oppose this motion. Both Tarpoly and Sealed Air have filed additional memoranda concerning the motion.

OPINION

In the absence of an applicable statute or rule of this court covering interventions, Fed. R. App. P. 15(d) governs. *Krupp Inc.* v. *United States International Trade Commission*, No. 80–19 (CCPA March 19, 1981) (Motion for Leave to Intervene). It provides:

> (d) Intervention. Unless an applicable statute provides a different method of intervention, a person who desires to intervene in a proceeding under this rule shall serve upon all parties to the proceeding and file with the clerk of the court of appeals a motion for leave to intervene. The motion shall contain a concise statement of the interest of the moving party and the grounds upon which intervention is sought. A motion for leave to intervene or other notice of intervention authorized by an applicable statute shall be filed within 30 days of the date on which the petition for review is filed.

Without more, the implication is that the granting of a motion to intervene would inherently rest on the sound discretion of the court. In *UAW* v. *Scofield*, 382 U.S. 205, 217 n.10 (1965), the Supreme Court commented on intervention in the courts of appeals by private parties directly affected by agency orders and indicated that the policies underlying Rule 24 of the Federal Rules of Civil Procedure (Intervention in United States District Courts) "may be applicable in appellate courts." [2] That rule provides in pertinent part as follows:

> RULE 24. Intervention
>
> (a) Intervention of Right. Upon timely application anyone shall be permitted to intervene in an action: (1) when a statute of the United States confers an unconditional right to intervene; or (2) when the applicant claims an interest relating to the property or transaction which is the subject of the action and he is so situated that the disposition of the action may as a practical

[1] A Petition for Writs of Mandamus and Prohibition was filed in this court by Tarpoly on December 17, 1980 (No. 81-5). This court, by decision dated February 5, 1981, denied said petition, holding that Writs of Mandamus and Prohibition were not appropriate. Sealed Air's petition to intervene at that time was dismissed as moot. *Canadian Tarpoly Co.* v. *United States International Trade Commission*, 640 F. 2d 1322, 209 USPQ 33 (CCPA 1981) (Judges Baldwin and Nies, dissenting).

[2] *See* C. Wright, *Law of Federal Courts*, 369–74 (1976); *see also United States* v. *Bursey*, 515 F. 2d 1228, 1238 n. 24, (CA 5 1975); *Pepsico, Inc* v. *FTC*, 472 F. 2d 179, 184–86, (CA 2 1972), *cert denied*, 414 U.S. 876 (1973).

matter impair or impede his ability to protect that interest, unless the applicant's interest is adequately represented by existing parties.

(b) Permissive Intervention. Upon timely application anyone may be permitted to intervene in an action: (1) when a statute of the United States confers a conditional right to intervene; or (2) when an applicant's claim or defense and the main action have a question of law or fact in common. When a party to an action relies for ground of claim or defense upon any statute or executive order administered by a federal or state governmental officer or agency or upon any regulation, order, requirement, or agreement issued or made pursuant to the statute or executive order, the officer or agency upon timely application may be permitted to intervene in the action. In exercising its discretion the court shall consider whether the intervention will unduly delay or prejudice the adjudication of the rights of the original parties.

Sealed Air as the assignee of the '984 patent, which is the subject of ITC's June 30, 1979, order, argues that the "effect of the appeal [No. 81–11], if successful, would be to direct the ITC to vacate the exclusionary order which was issued by the ITC at the request of Sealed Air [thus resulting in] . . . grave, adverse consequences to Sealed Air."

We agree with Sealed Air insofar as its argument applies to Tarpoly's complaint that ITC's "[o]rder unlawfully extended the patent monopoly of the '984 patent." It is clear that Sealed Air's ownership of the '984 patent is an interest relative to Appeal No. 81–11. If, in disposing of Appeal No. 81–11, this court vacates ITC's June 30, 1979, order, it necessarily follows that Sealed Air's rights under the '984 patent would be affected. Finally, since ITC has no ownership interest whatever in the '984 patent, we are unwilling to hold that Sealed Air's ownership interest would be adequately represented by ITC.

Although Sealed Air's motion to intervene was filed three days late, Tarpoly does not oppose the motion on that basis, and there appears to be no prejudice to Tarpoly from waiving Sealed Air's tardiness. ITC does not oppose the motion at all. Accordingly, we are persuaded to grant Sealed Air's motion. CCPA Rule 1.4(c); Fed. R. App. P. 2; *see Krupp, supra; North American Pharmacal, Inc.* v. *HEW*, 491 F. 2d 546, 550 (CA 8 1973); *see also United States Steel Corp.* v. *EPA*, 614 F. 2d 843, 846 (CA 3 1979).

Tarpoly argues, however, that Sealed Air has waived its right to intervene because it failed to contest Tarpoly's November 7 petition before ITC. In other words, Tarpoly asserts that failure by Sealed Air to intervene below precludes this court from permitting intervention on appeal. Taking into account the circumstances of this case as set forth above, we do not agree.

United States Court of International Trade

One Federal Plaza
New York, N.Y. 10007

Chief Judge
Edward D. Re

Judges

Paul P. Rao
Morgan Ford
Scovel Richardson
Fredrick Landis
James L. Watson
Herbert N. Maletz
Bernard Newman
Nils A. Boe

Senior Judge
Samuel M. Rosenstein

Clerk
Joseph E. Lombardi

Decisions of the United States Court of International Trade

(Slip Op. 81-39)

A. J. ARANGO, INC., PLAINTIFF *v.* UNITED STATES, DEFENDANT

Court No. 77-4-00665

[Judgment for defendant.]

(Decided May 4, 1981)

Siegel, Mandell & Davidson (*Herbert T. Posner* at the trial and on the brief; *Allan H. Kamnitz* on the reply brief) for the plaintiff.

Thomas S. Martin, Acting Assistant Attorney General; *Joseph I. Liebman*, Attorney in Charge, Field Office for Customs Litigation (*James A. Resti* at the trial and on the brief), for the defendant.

MALETZ, Judge: At issue is the proper classification of articles known as torsionally flexible couplings and rubber parts which were manufactured in West Germany and entered at the port of Tampa, Florida in December 1975.

The importations were classified under item 680.50 of the Tariff Schedules of the United States as shaft couplings and parts thereof and assessed duty at the rate of 9.5 percent ad valorem. Plaintiff contends that the importations constitute more than shaft couplings, thus precluding classification under item 680.50. Instead, plaintiff claims that the importations are properly classifiable under item 660.54 as other parts of internal combustion engines dutiable at the rate of 5 percent ad valorem.

I

The record shows the following: A shaft coupling is an article which joins two shafts together. It has two functions: (1) to connect a driving machine with a driven machine; and (2) to transmit power from the driving machine to the driven machine. There are three types of shaft couplings: rigid, flexible and fluid. Flexible couplings are couplings which are designed to connect shafts that are misaligned either laterally or angularly. The imported articles are flexible couplings and are used in diesel drive, electromotor drive and hydraulic motor drive installations where the use of a rigid coupler would be inappropriate due to resonance or vibration problems.

According to plaintiff's expert witness, couplings such as the importations which are used to correct torsional vibration problems are called "vibrational dampers." In the witness' view, the ability of the imported merchandise to couple shafts together is merely incidental to what he considered its primary functions, namely to detune the natural frequency of input roughness of an engine's crank effect or torque, and to dampen its torsional vibrations.

More particularly, plaintiff's expert witness explained that the functions of detuning (changing the natural frequency of the system) and damping (absorbing the vibration energy) are necessary in diesel engines because the cylinders in the engine fire one after the other causing an intermittent or rough torque curve. This creates a torsional or twisting form of vibration which causes stress in the shafting and can cause shaft failure. Further, the uneven impulses in a diesel engine result in a natural frequency which produces a condition of resonance. This resonance builds up a large twisting amplitude which causes high stress in the shaft, the engine and the driven machine which can lead to failure.

Additionally, plaintiff's expert witness testified that the imported coupling is a torsionally flexible coupling which performs the function

of a shaft coupling since it connects two shafts together. However, he added that the imported coupling is distinguishable from a shaft coupling because of its ability to convert kinetic energy into heat and thus detune the frequency and dampen the vibration in diesel and other similar engines. Thus, according to the witness, the imported coupling is a torsional soft coupling which is known as a torsional vibration damper rather than a shaft coupling.

II

In this setting, plaintiff argues that while the couplings in question do perform the mechanical function of power transmission by connecting the rotating shafts of the driving and driven machines, they are nonetheless more than a shaft coupling because their primary purpose is the reduction of torsional vibration.

In order to determine whether an article is "more than" an article included in a particular tariff provision, it is necessary to ascertain the common meaning of the term in the provision and compare it with the involved merchandise. E.g., *E. Green & Son* v. *United States*, 59 CCPA 31, 34, C.A.D. 1032, 450 F. 2d 1396, 1398 (1971). And the meaning of a tariff provision, when not otherwise defined in the Tariff Schedules or indicated by legislative history, is the common meaning of that provision as understood in trade and commerce. E.g., *Schott Optical Glass, Inc.* v. *United States*, 67 CCPA —, —, C.A.D. 1239, 612 F. 2d 1283, 1285 (1979).

Determination of the correctness of the plaintiff's contention that the imported merchandise is "more than" a shaft coupling therefore requires an initial finding as to the common meaning of the *eo nomine* provision for "shaft couplings" as that term is employed in item 680.50. What constitutes the common meaning of a tariff term is not a question of fact but rather one of law. And in making its determination as to the common meaning of a tariff provision the court may consult dictionaries, scientific authorities and other reliable sources of information. E.g., *Schott Optical Glass, supra.*

Couplings and shaft couplings are defined in various authoritative sources as follows:

Baumeister and Marks, *Standard Handbook for Mechanical Engineers*, pp. 8–50, 8–51 (7th ed. 1967):

COUPLINGS

A coupling makes a semipermanent connection between two shafts. They are of three main types: rigid, flexible, and fluid.

* * * * * * *

FLEXIBLE COUPLINGS

Flexible couplings are designed to connect shafts which are misaligned either laterally or angularly. *A secondary benefit is the absorption of impacts due to fluctuations in shaft torque or angular speed.* * * * [Emphasis added.]

Carmichael, *Kent's Mechanical Engineers' Handbook*, (12th ed. 1956), pp. 15–17 et seq.:

COUPLINGS

* * * * * * *

Couplings are used to join lengths of shafting, which must often be sectionalized for practicability and economy in manufacture and shipping or for purposes of ready installation. This applies to long transmission shafting, to shafts of separately built driving and driven machine units, and, on occasion, to short shafts within machines. * * *

5. RIGID COUPLINGS

Rigid couplings are used to make a solid connection between shafts. They are of various types.

* * * * * * *

6. FLEXIBLE COUPLINGS

* * * * * * *

The ill effects of * * * misalignment are commonly avoided by inserting a flexible coupling between shafts, which also lessens alignment labor. *A well-chosen flexible coupling will operate with negligible maintenance cost and power absorption and will introduce no harmful vibrations or resonances into the system.* [Emphasis added.]

* * * * * * *

TORSIONAL RESILIENCE. In addition to misalignment compensation, *a small degree of torsional flexibility is often desirable in a high-speed flexible coupling in order to lessen noise and to prevent transmission of starting and running shocks to the motor or gear reducer.* This is provided in various amounts by a wide variety of couplings based on the fundamental construction of two flanges connected by resilient spring or nonmetallic elements. * * * [Emphasis added.]

HIGH TORSIONAL FLEXIBILITY *is sometimes necessary to isolate extreme shock loads or vibration.* * * * [Emphasis added.]

Audels, *New Mechanical Dictionary*, p. 287 (1960), defines flexible couplings as:

A shaft coupling used to connect two shafts in which perfectly rigid alignment is impossible; the drive is commonly transmitted

> from one flange to another through a resilient member, such as a steel spring, or a rubber disc or bushings.

From the foregoing, it is evident that the torsionally flexible coupling here in issue is merely a flexible shaft coupling which performs the function of such a coupling. In other words, the ability of the imported coupling to dampen torsional vibration and resonance is not a separate function, but is one of the normal functions of a flexible coupling. Hence, the device cannot be "more than" or "other than" a shaft coupling.

The Way Things Work, p. 192 (Vol. 2, 1971), an encyclopedia of technology, states that a flexible coupling has as its connection a "yielding" intermediate element which may consist of any number of flexible materials including rubber, leather or steel springs. This flexible element allows parallel and/or angular shaft movement "besides absorbing impact (shock) due to irregularities in the motion of the driving shaft" by storage or conversion of energy or both. This is precisely the function plaintiff's expert witness testified that the imported coupling performs. As explained by that witness, due to the rough or intermittent torque curve caused by the sequential firing of a diesel engine, a torsional vibration problem is created. This problem is caused by the irregular motion of the driving shaft. The imported coupling absorbs the energy in its rubber member, and converts it into heat. It is therefore nothing more than an improved type of coupling. While such merchandise may or may not have been common in the trade at the time the Tariff Schedules were adopted, an *eo nomine* designation includes all articles subsequently created which fairly come within its scope. *Hoyt, Shepston & Sciaroni* v. *United States*, 52 CCPA 101, 103–104, C.A.D. 865 (1965); *Davies Turner & Co.* v. *United States*, 45 CCPA 39, 41, C.A.D. 669 (1957).

The merchandise here undeniably consists of flexible couplings and parts of couplings and the differences claimed by plaintiff to preclude classification as such under item 680.50 are only improvements which do not alter or change its essential character. See *Robert Bosch Corp.* v. *United States*, 63 Cust. Ct. 96, 103–104, C.D. 3881 (1969). As this court noted in *C. T. Takahashi & Co., Inc.* v. *United States*, 74 Cust. Ct. 38, 41, C.D. 4583 (1975):

> In determining the applicability of an *eo nomine* designation it is well to recall that "Congress legislated for the future and is presumed to have intended to cover all forms of the article, including improved models not known in 1930." *Kaysons Import Corp.* v. *United States*, 56 Cust. Ct. 146, 150, C.D. 2622 (1966). See *Trans-Atlantic Company* v. *United States*, 471 F. 2d 1397, 60 CCPA 100, C.A.D. 1088 (1973). * * *

Similarly here, the *eo nomine* designation "shaft couplings * * * and parts thereof" includes the imported merchandise, a fact clearly demonstrated by the recognized technical lexicons.[1]

Kent's Mechanical Engineers' Handbook, *supra*, pp. 15–21—15–25, classifies flexible couplings according to the following criteria: longitudinal flexibility, angular flexibility, lateral or parallel flexibility, torsional resilience, and high torsional flexibility. As previously indicated, this handbook points out that the couplings delivering high torsional flexibility are used to isolate extreme shock loads or vibration. Clearly, this is the function that the imported coupling performs.

The so-called "separate and distinct" functions of the imported coupling, which plaintiff contends make it more than a shaft coupling, are in actuality merely functions inherent in a flexible coupling, which is a type of a shaft coupling. This is not a situation in which an article performs a function separate and distinct from its primary function or is a combination of two distinct articles each provided for separately in the Tariff Schedules. *Cf.*, e.g., *Dollar Trading Corp.* v. *United States*, 67 Cust. Ct. 308, C.D. 4290, 349 F. Supp. 1395 (1971), *aff'd*, 60 CCPA 10, C.A.D. 1074, 468 F. 2d 631 (1972). Plaintiff's expert witness testified that the imported coupling can only be used to connect a driving machine to a driven machine, albeit in a manner which isolates and dampens torsional vibration. However, the supposed "function" of damping torsional vibration is not really a function but rather the only manner of performing the primary function of a shaft coupling to connect a driving machine to a driven machine and transmit power where torsional vibration is a problem.

The imported coupling is, therefore, merely a more sophisticated form of flexible coupling. See *Hoyt, Shepston & Sciaroni*, *supra*. Thus, two of plaintiff's witnesses testified that a torsionally flexible coupling is a shaft coupling,[2] and the literature groups such a coupling with shaft couplings.

In sum, plaintiff has established nothing more than the fact that the torsionally flexible coupling (and parts) imported by plaintiff is a flexible coupling (and parts thereof)—which is a type of shaft coupling Hence, it has failed to meet its burden of proof in rebutting the presumptively correct classification of the merchandise under item 680.50 of the Tariff Schedules.

---

[1] The nomenclature of articles of a technical nature is not always reflected in dictionaries prepared for general use, in which case the court may consult technical sources. *C. J. Tower & Sons of Buffalo, Inc.* v. *United States*, 69 Cust. Ct. 105, 111, C.D. 4379, 351 F. Supp. 604, 608 (1972), *aff'd*, 61 CCPA 74, C.A.D. 1124, 496 F. 2d 1219 (1974).

[2] The two primary witnesses for plaintiff both admitted on cross-examination that the imported merchandise is, in fact, a shaft coupling (R. 51–62, 112). Although the testimony of witnesses is merely advisory to the court, *United States* v. *National Carloading Corp.*, 48 CCPA 70, 72, C.A.D. 767 (1961), such an admission is entitled to weight, particularly since one of the witnesses making the admission was qualified by plaintiff as an expert.

III

It is a settled principle that plaintiff in order to prevail has a dual burden of proof. Not only must it prove that the contested classification is incorrect, it must also prove that the claim advanced on its behalf is correct. *United States* v. *New York Merchandise Co., Inc.*, 58 CCPA 53, 58, C.A.D. 1004, 435 F. 2d 1315, 1318 (1970). Thus, even assuming that plaintiff has met its burden in establishing that the imported merchandise is more or other than a shaft coupling, and thus precluded from classification under item 680.50, it is clear that it has not met its burden in establishing its claim that the merchandise comprises other parts of internal combustion engines, classifiable under item 660.54.

With respect to this claim, plaintiff indicates—correctly—that the test mandated by General Interpretative Rule 10(ij) that merchandise is "part" of an article is whether it is chiefly or solely used as a part of the claimed article. An additional consideration, as indicated by plaintiff, is that to be classifiable as a part, the imported merchandise must serve a useful function in relation to the main article of which it is alleged to be a part. See, e.g., *Gallagher & Ascher Co.* v. *United States*, 52 CCPA 11, 16, C.A.D. 849 (1964). Viewed in this light, the court must conclude that the evidence of actual use adduced at the trial is insufficient to establish that the imported merchandise is either solely or chiefly used as a part of an internal combustion engine.

Plaintiff's witnesses testified that the applications of the coupling in issue are numerous and not limited to diesel engines. Although the witnesses did not quantify the variety of uses, plaintiff's expert witness testified that ten to fifteen percent of installations employing large reciprocating generators being driven by *electric motors* utilize a torsionally flexible coupling such as the one in issue. However, he did not specify the actual number of installations he had observed utilizing a torsionally flexible coupling such as the one in issue which employed *other* than internal combustion engines. He stated though that he had seen that type of coupling used in diesel engine installations a couple of hundred times. From the foregoing, it is entirely possible that installations not employing internal combustion engines accounted for a major portion of the uses of the merchandise. This is particularly true when it is considered that there is no evidence whatever to show what percentage of total use was represented by internal combustion engines. In sum, plaintiff has failed to prove that the imported couplings are chiefly used in internal combustion engines.

In any event, the use which governs is the chief use of the class of articles at or immediately prior to importation to which the im-

ported articles belong. *United States* v. *Baltimore & Ohio R.R. Co.*, 47 CCPA 1, 4, C.A.D. 719 (1959). See also General Interpretative Rule 10(e)(i).[3] Chief use is a question of actual fact which must be established on the basis of positive testimony representative of an adequate geographical cross-section of the country. *L. Tobert & Co., Inc.* v. *United States*, 41 CCPA 161, 164, C.A.D. 544 (1953). See also *Pistorino & Co., Inc.* v. *United States*, 81 Cust. Ct. 131, 133, C.D. 4779, 463 F. Supp. 1311, 1312 (1978), *aff'd*, 67 CCPA —, C.A.D. 1234, 607 F. 2d 989 (1979).

The technical lexicons previously referred to, as well as the record in this case, demonstrate that the imported merchandise belongs to a class of articles known as couplings (and parts thereof). At the very least, it belongs to the class of articles known as flexible couplings (and parts thereof) and a plurality of uses other than with internal combustion engines has been established for such merchandise. Even if the class were restricted to torsionally soft flexible couplings, the record demonstrates that this merchandise is frequently used with electromotors and hydraulic motors. Indeed, plaintiff's expert witness went so far as to say that a coupling such as that represented by the imported merchandise was "commonly used" with an electric motor to drive a reciprocating compressor (R. 126).

Based on the foregoing, plaintiff has failed to prove that the chief use of the class or kind of article to which the importations belong is as other parts of internal combustion engines.

Finally, it is clear from the record that the involved merchandise is used when there is torsional vibration which must be reduced. This torsional vibration, according to the record, can arise from the intermittent torque curve of a diesel engine or can arise from the roughness of the *driven* machine, such as a reciprocating compressor or generator. Thus, the importation serves a "useful function" not only to a diesel engine, but to a reciprocating compressor. In reality, therefore, the importation is neither a part of the driving machine nor the driven machine; rather, it is a link between the driving and driven machines. Indeed, a torsionally flexible coupling is not an item necessary for a diesel engine to function as a diesel engine, but rather to aid in the performance of *one* of the applications of a diesel engine, which are numerous and diverse.

For the foregoing reasons, the action is dismissed.

---

[3] General Interpretative Rule 10(e)(i) provides: (e) in the absence of special language or context which otherwise requires—(i) a tariff classification controlled by use (other than actual use) is to be determined in accordance with the use in the United States at, or immediately prior to, the date of importation, of articles of that class or kind to which the imported articles belong, and the controlling use is the chief use, i.e., the use which exceeds all other uses (if any) combined.

(Slip Op. 81–40)

GENENDER WHOLESALE, PLAINTIFF *v.* UNITED STATES, DEFENDANT

Court No. 76–5–01171

Watch cases

The application of a surface layer of gold of a thickness of one and one-half to two millionths of an inch on the "bezel" or top portion of a watch case, serving to provide a yellow color, to enhance its value and to increase its saleability and representing 25 to 30 percent of the imported cost of the watch case, constitutes a "commercially significant amount" of gold thereon within the intendment of General Headnote 9(f)(iv), thereby requiring the classification of the subject merchandise under item 720.24, TSUS.

[Judgment for defendant.]

(Decided May 7, 1981)

Barnes, Richardson & Colburn (*Steven P. Sonnenberg* and *Mark S. Zolno* at the trial and on the brief) for the plaintiff.

Thomas S. Martin, Acting Assistant Attorney General; *Joseph I. Liebman*, Attorney in Charge, International Trade Field Office, Commercial Litigation Branch (*Sidney N. Weiss* at the trial and on the brief), for the defendant.

BOE, *Judge:* The merchandise constituting the subject matter of the within cause of action consists of watch cases imported from Hong Kong and entered at the port of Chicago, Illinois in September 1974.

Upon liquidation the imported merchandise was classified as watch cases "containing gold" and assessed with duty under item 720.24, TSUS, providing in pertinent part:

Schedule 7, Part 2, Subpart E:		
Watch cases and parts thereof:		
Not wholly and not almost wholly of gold or platinum or of both gold and platinum:		
Wholly or in part of silver; or containing gold or platinum; or set, or prepared to be set, with precious or semiprecious stones or with imitation gemstones:		
720.24	Cases	20¢ each + 15% ad val.

The plaintiff, protesting the foregoing classification, claims the subject merchandise to be properly classified under item 720.28, TSUS:

	Other:	
720.28	Cases	5¢ each + 10% ad val.

General Headnote 9(f)(iv), which plaintiff contends precludes the classification of the subject merchandise within the purview of the liquidated classification, provides in pertinent part:

> 9. *Definitions.* For the purposes of the schedules, unless the context otherwise requires—
>
> * * * * * * *
>
> (f) the terms 'of', 'wholly of', 'almost wholly of', 'in part of' and 'containing', when used between the description of an article and a material (e.g., 'furniture *of* wood', 'woven fabrics, *wholly of* cotton', etc.), have the following meanings:
>
> * * * * * * *
>
> (iv) 'in part of' or 'containing' mean that the article contains a significant quantity of the named material.

With respect to subparagraphs (ii) and (iv) of paragraph 9(f), General Headnote 9 further provides:

> With regard to the application of the quantitative concepts specified in subparagraphs (ii) and (iv) above, it is intended that the *de minimis* rule apply.

It is undisputed from the evidence adduced that the imported watch cases contain gold which had been intentionally applied to the merchandise by an electroplating process. The surface coating of the gold on the watch case is of a thickness of one and one-half to two millionths of an inch, and of a degree of purity of 22 to 24 karats. The yellow color of the watch case is obtained only by the application of the gold by means of the process aforereferred to. The value of the gold applied to the surface of the watch case, computed on the basis of the price of gold at the time of importation, is one cent. The total cost of the gold together with the application process approximates five to seven cents—about 25 to 30 percent of the total cost of a watch case.

In contending that the *de minimis* provision contained in General Headnote 9 precludes the classification of the subject merchandise as articles "containing gold," the plaintiff relies on the decisions of our appellate court in *Cavalier Shipping Co.* v. *United States*, 60 CCPA 152, 478 F. 2d 1256 (1973) and *United States* v. *Aceto Chemical Co.*, 64 CCPA 78, 553 F. 2d 685 (1977). In so doing, the plaintiff urges that the primary function of a watch case is to house and protect that which under schedule 7, part 2, subpart E, TSUS, is termed and referred to as a movement. Thus, the plaintiff contends that the admitted presence of gold on the subject cases serves only to provide a yellow color thereto and, in so doing, is not present in such signifcant amount sufficient to satisfy the requirements of the quantitative-functional test enunciated by our appellate court.

The defendant, urging that the instant action and thes ubject merchandise therein fall within the rationale of *Varsity Watch Co.* v. *United States*, 34 CCPA 155, C.A.D. 359 (1947), contends that the gold contained upon the surface of the watch case part known as the bezel, is of a "significant quantity," causing the *de minimis* provision to be inapplicable.

In the *Varsity Watch* case, *supra*, despite the absence of the formalized statutory presence of a general headnote or an interpretative rule referring thereto, our appellate court recognized the existence of the *de minimis* principle in general. Notwithstanding such recognition, however, the court determined that with respect to all metallic watch cases in which gold was intentionally applied, enhancing the value of the case and serving the commercial purposes of providing a yellow color and increasing its saleability, paragraph 367(f) of the Tariff Act of 1930 required the classification thereof as being "in part of gold," irrespective of the minute quantity of this precious metal therein.

In the enactment of the Tariff Schedules of the United States, the provisions of paragraph 367(f) of the Tariff Act of 1930 in substantive meaning have been retained by the inclusion of the item descriptions of watch cases as "containing gold" and "other," respectively. Noteworthy is the inclusion of General Headnote 9(f)(iv) in the tariff schedules specifically providing that the terms "in part of" or "containing" mean "that the article contains a significant quantity of the named material." Of further import is the statement contained in the Tariff Classification Study (Volume I), Submitting Report, November 15, 1960, at 14, wherein the intended application of the aforecited general headnote is made clear:

> In the proposed revised schedules, provisions based on the 'in part of' concept have been kept to a minimum, and where it is used the intention is that the component material be present in commercially significant amount.

In view of the foregoing it is proper that the court direct its attention to the evidence adduced herein in order to determine whether the gold component contained in the subject watch cases is present in a "commercially significant amount." Quantitatively, in an isolated amount the gold acknowledged to be contained in the subject watch cases might not be deemed to be a significant amount. However, in considering this quantity of gold as it relates to the subject merchandise, the court is of the opinion that the gold component, indeed, is present in a "commercially significant amount." The conclusion to be drawn from the unrebutted evidence would cause a contrary determination to be untenable.

The construction of the subject watch cases consists of a base metal of brass, covered by a coating of nickel which, as the result of the

electroplating process, in turn, is covered by a surface layer of gold of a thickness of one and one-half to two millionths of an inch. As the evidence discloses, the presence of the gold inhibits tarnish and rust and serves as the only commercial means by which the desired yellow color can be provided to the watch case. Notwithstanding the complete watch as admitted in evidence, plaintiff's Exhibits 3 and 4, might be deemed a novelty item, it must be borne in mind that the subject merchandise presently before this court consists solely of the watch case.[1] It is with respect to this subject merchandise that the testimony appears undisputed that the yellow color of the watch case, provided by the application of gold, causes the same to possess a quality of richness, thereby enhancing its saleability. The significance of the quantity of gold in the subject merchandise is further illustrated by the testimony of defendent's witness, Mr. Weisberg, who explained that the application of a lesser quantity over the brass metal would reflect a "pink gold" color whereas the application of such a lesser quantity over the nickel would reflect a "whitish gold" color. In short, the quantity of gold existing as a surface on the subject merchandise fulfills a specific purpose—to provide the commercially desired yellow color of gold.

The evidence further reveals that at the time of importation of the subject merchandise, the market value of two milligrams of gold, the acknowledged quantity contained in each watch case, was one cent. In applying the cost standard recognized in the United States in the costume jewelry industry, it appears that the electroplating process used in the application of the gold was five cents. Plaintiff's evidence discloses that the subject watch cases were imported at a cost of 25 cents each. With the cost of the gold component and the application thereof on the subject watch cases thus representing 25 to 30 percent of the value of the imported article, the presence of a "commercially significant amount" of the gold component on the subject merchandise would appear to be clearly evidenced.

As stated by Chief Judge Markey in *Cavalier Shipping Co., supra*, despite the fact that General Headnote 9(f)(iv) uses the term "significant quantity" by way of definition, the interpretation thereof "remains open." Accordingly, in the absense of further aid from statutory provisions or explanations, the quantitive determination of the amount of a component necessary to be embraced within the definitive meaning of the term "significant" necessarily must be recognized to depend upon the factual evidence adduced in each respective case. The defendant's witness, Mr. Weisberg, in his testimony has provided a standard upon which a determination with respect to the "com-

[1] As evidenced by schedule 7, part 2, subpart E, the parts of a watch include the case, the movement and the dial, all of which are subject to specific classification under the provisions of the aforedescribed tariff schedules.

mercially significant amount" of the gold component in the subject merchandise can be measured. It has been established without dispute that in the costume jewelry industry, the application of gold upon the jewelry by means of an electroplating process is of a thickness of one to three-millionths of an inch. The similarity with respect to the quantity of gold as well as with respect to the manner of its application existing between the commercial costume jewelry industry and the subject merchandise satisfies this court that the component, gold, is present in the subject watch cases in a recognized commercially significant amount within the United States.

It appearing to the court from all of the evidence presented herein that the plaintiff has failed in its dual burden to prove that the liquidated classification of the subject merchandise is in error and to establish the correctness of its claimed classification, the above-entitled action must be dismissed and the liquidated classification of the subject merchandise under item 720.24, TSUS, accordingly, affirmed.

Let judgment be entered accordingly.

(Slip Op. 81–41)

FARR MAN & CO., INC. AND THE NATIONAL SUGAR REFINING COMPANY, PLAINTIFFS *v.* UNITED STATES, DEFENDANT

Court No. 79–10–01490

Order

(*Dated May 7, 1981*)

Before RICHARDSON, LANDIS, and BOE, *Judges.*

Upon reading and filing plaintiffs' motion for an order compelling discovery, defendant's motion for a protective order and request for permission for immediate appeal, and plaintiffs' response thereto, upon all other papers and proceedings had herein, and upon review by the court of each of the documents defendant has submitted *in camera*, it is hereby

ORDERED that plaintiffs' motion be granted, with the exceptions noted *infra*, and it is further

ORDERED that defendant's cross motion be granted in part to the extent indicated *infra* in this order, and it is further

ORDERED that documents 2, 4 (with the exception of the attached letter from the Deputy Secretary, dated October 20, 1977), 5, 6 (with the exception of page 6 of said document), 7, 9 (with the exception of the entire paragraph under the heading *II OAS Consultations* on page 2, lines 23 through 29), 11, 13 and 14 be, and the same hereby

are released to plaintiffs for the purpose of inspection and copying, and it is further

ORDERED that documents 12 and 15 not be released to plaintiffs, and it is further

ORDERED that:

1. With the exception of the documents 12 and 15 and parts of documents 4, 6 and 9 listed above in this order, the court orders that all the remaining documents requested by the plaintiff and submitted by the defendant to the court *in camera* shall be made available by the clerk of the court, at the office of the clerk, for examination by counsel for plaintiff, their legal associates and office personnel actively assisting in this litigation, within ten days of the entry of this order. Counsel for defendant may be present during this examination, if desired.

2. The clerk of the court shall retain under seal the documents as to which access is permitted by plaintiff and shall not allow access to them by any person other than the court and the persons specified in paragraph 1.

3. This order is without prejudice to the right of either party to make further application to the court for use for purpose of this litigation of any of the specified documents requested by the plaintiff and submitted by the defendant to the court *in camera*.

4. Until further order of the court, the clerk of the court shall retain under seal the documents and parts of documents excepted above as to which defendant's claim of privilege has been sustained.

Decisions of the United States Court of International Trade

Abstracts

Abstracted Protest Decisions

DEPARTMENT OF THE TREASURY, *May 11, 1981.*

The following abstracts of decisions of the United States Court of International Trade at New York are published for the information and guidance of officers of the customs and others concerned. Although the decisions are not of sufficient general interest to print in full, the summary herein given will be of assistance to customs officials in easily locating cases and tracing important facts.

WILLIAM T. ARCHEY,
Acting Commissioner of Customs.

DECISION NUMBER	JUDGE & DATE OF DECISION	PLAINTIFF	COURT NO.	ASSESSED	HELD	BASIS	PORT OF ENTRY AND MERCHANDISE
				Par. or Item No. and Rate	Par. or Item No. and Rate		
P81/58	Richardson, J. May 5, 1981	Sortex Co. of North America, Inc.	77-2-00135	Item 712.49 10%	Item 666.25 5.5%	Sortex Company of North America, Inc. v. U.S. (C.D. 4746, aff'd C.A.D. 1221)	Detroit Electronic color sorting machines and parts thereof
P81/59	Landis, J. May 5, 1981	Continental Fastener Corporation	77-11-04787, etc.	Item 646.42 9.5%	Item 646.56 0.1¢ per lb.	Continental Fastener Corp. v. U.S. (Abs. P78/14)	Chicago Clinch nuts
P81/60	Boe, J. May 5, 1981	Westinghouse Trading Corp.	80-1-00036, etc.	Item 536.11 22.5%	Item 535.14 15%	Westinghouse Trading Company v. U.S. (C.D. 4817)	New York Translucent alumina tubes

Decisions of the United States Court of International Trade

Abstracts

Abstracted Reappraisement Decisions

DECISION NUMBER	JUDGE & DATE OF DECISION	PLAINTIFF	COURT NO.	BASIS OF VALUATION	HELD VALUE	BASIS	PORT OF ENTRY AND MERCHANDISE
R81/157	Re, C.J. May 5, 1981	Altray Co., Inc.	74-7-01973	Export value	Appraised values shown on entry papers less additions included to reflect currency revaluation	C.B.S. Imports Corp. v. U.S. (C.D. 4739)	New York Merchandise covered by entries listed on schedule attached to decision and judgment
R81/158	Re, C.J. May 5, 1981	Conti Rubber Products Inc., Albert E. Bowen, Inc.	76-12-02709	Foreign value	Claimed unit values (all in Deutsche marks) listed on schedule attached to decision and judgment	Agreed statement of facts	New York Various automotive tires
R81/159	Re, C.J. May 5, 1981	Courtaulds North America	73-5-01220, etc.	Export value	Appraised values shown on entry papers less additions included to reflect currency revaluation	C.B.S. Imports Corp. v. U.S. (C.D. 4739)	Boston; New York Merchandise covered by entries listed on schedule attached to decision and judgment

DECISION NUMBER	JUDGE & DATE OF DECISION	PLAINTIFF	COURT NO.	BASIS OF VALUATION	HELD VALUE	BASIS	PORT OF ENTRY AND MERCHANDISE
R81/160	Re, C.J. May 5, 1981	Famous Raincoat Co.	74-4-01084, etc.	Export value	Appraised values shown on entry papers less additions included to reflect currency revaluation	C.B.S. Imports Corp. v. U.S. (C.D. 4739)	New York Merchandise covered by entries listed on schedule attached to decision and judgment
R81/161	Re, C.J. May 5, 1981	Fleet Street Ltd.	77-10-04396, etc.	Export value	Appraised values shown on entry papers less additions included to reflect currency revaluation	C.B.S. Imports Corp. v. U.S. (C.D. 4739)	New York Wearing apparel, etc.
R81/162	Re, C.J. May 5, 1981	Louis Goldey Co., Inc.	73-1-00185, etc.	Export value	Appraised values shown on entry papers less additions included to reflect currency revaluation	C.B.S. Imports Corp. v. U.S. (C.D. 4739)	New York Merchandise covered by entries listed on schedule attached to decision and judgment
R81/163	Re, C.J. May 5, 1981	Mercury Radio & Battery Corp.	73-3-00824, etc.	Export value	Appraised values shown on entry papers less additions included to reflect currency revaluation	C.B.S. Imports Corp. v. U.S. (C.D. 4739)	New York Merchandise covered by entries listed on schedule attached to decision and judgment
R81/164	Re, C.J. May 5, 1981	Starlight Trading, Inc.	73-1-00332, etc.	Export value	Appraised values shown on entry papers less additions included to reflect currency revaluation	C.B.S. Imports Corp. v. U.S. (C.D. 4739)	New York Merchandise covered by entries listed on schedule attached to decision and judgment

R81/165	Re, C.J. May 5, 1981	Twin Fashions, Inc.	73-9-02703, etc.	Export value	Appraised values shown on entry papers less additions included to reflect currency revaluation.	C.B.S. Imports Corp. v. U.S. (C.D. 4739)	New York Wearing apparel, etc.
R81/166	Watson, J. May 5, 1981	Geigy Chemical Corporation	R65/22907	United States value	U.S. selling prices, less 1% cash discount as determined by customs officer at time of appraisement; less 33.-4% representing profit and general expenses usually made in U.S. on sale of dyestuffs of same class or kind; less costs of transportation and insurance from place of shipment to place of delivery in amounts determined by customs officer at time of appraisement; divided by 1.40 or such other factor applied by customs officer, to allow for customs duties payable on imported dyestuffs	U.S. v. Geigy Chemical Corporation et al. (C.A.D. 1155)	New York Benzenoid dyestuffs

DECISION NUMBER	JUDGE & DATE OF DECISION	PLAINTIFF	COURT NO.	BASIS OF VALUATION	HELD VALUE	BASIS	PORT OF ENTRY AND MERCHANDISE
R81/167	Watson, J. May 5, 1981	Geigy Chemical Corporation	R66/22294	United States value	U.S. selling prices, less 1% cash discount as determined by customs officer at time of appraisement; less 32.6% representing profit and general expenses usually made in U.S. on sales of dyestuffs of same class or kind; less costs of transportation and insurance from place of shipment to place of delivery in amounts determined by customs officer at time of appraisement; divided by 1.40 or such other factor applied by customs officer, to allow for customs duties payable on imported dyestuffs	U.S. v. Geigy Chemical Corporation et al. (C.A.D. 1155)	New York Benzenoid dyestuffs

Rehearing Motion Filed

May 7, 1981

C. Itoh & Co. America, Inc. *v.* United States, Court No. 77-2-00271.—Fabric in Imitation of Suede.—Slip Op. 81-29 (April 7, 1981). Motion by plaintiff.

International Trade Commission Notices

Investigations by the U.S. International Trade Commission

DEPARTMENT OF THE TREASURY, MAY 21, 1981

The appended notices relating to investigations by the United States International Trade Commission are published for the information of Customs Officers and others concerned.

R. E. CHASEN,
Commissioner of Customs.

Investigation No. 731–TA–42 (Preliminary)

MOTORCYCLE BATTERIES FROM TAIWAN

AGENCY: United States International Trade Commission.

ACTION: Institution of preliminary antidumping investigation.

SUMMARY: The U.S. International Trade Commission hereby gives notice of the institution of investigation No. 731–TA–42 (Preliminary) to determine whether there is a reasonable indication that an industry in the United States is materially injured, or is threatened with material injury, or the establishment of an industry in the United States is materially retarded, by reason of imports from Taiwan of motorcycle batteries which are allegedly sold or likely to be sold in the United States at less than fair value (LTFV). For purposes of this investigation, motorcycle batteries are defined as lead-acid-storage batteries principally dedicated for use in motorcycles, having a nominal output of either 6 or 12 volts and rated between 2 and 28 ampere hours (10 hour rate), as provided for in item 683.10 of the Tariff Schedules of the United States.

EFFECTIVE DATE: May 1, 1981.

FOR FURTHER INFORMATION CONTACT: Mr. Lynn Featherstone, Office of Investigations, U.S. International Trade Commission, Room 346, 701 E Street, NW., Washington, D.C. 20436; telephone 202–523–0242.

SUPPLEMENTARY INFORMATION: On May 1, 1981, petitions were simultaneously filed with the U.S. Department of Commerce and the U.S. International Trade Commission by Yuasa General Battery alleging that motorcyle batteries from Taiwan are being sold in the United States at LTFV and that an industry in the United States is being materially injured or threatened with material injury by reason of such imports. Accordingly, pursuant to section 733(a) of the Tariff Act of 1930 (19 U.S.C. 1673b(a)), the Commission is instituting preliminary antidumping investigation No. 731–TA–42 (Preliminary) to determine whether a reasonable indication of such injury exists. The Commission must make its determination within 45 days after the date on which the petition was received, or in this case by June 15, 1981. The investigation will be conducted according to the provisions of part 207, subpart B, of the Commission's Rules of Practice and Procedure (19 CFR 207).

WRITTEN SUBMISSIONS: Any person may submit to the Commission a written statement of information pertinent to the subject of the investigation. A signed original and nineteen (19) true copies of each submission must be filed at the Office of the Secretary, U.S. International Trade Commission Building, 701 E Street, NW., Washington, D.C. 20436, on or before June 1, 1981. All written submissions except for confidential business data will be available for public inspection.

Any business information for which confidential treatment is desired shall be submitted separately. The envelope and all pages of such submissions must be clearly labeled "Confidential Business Information." Confidential submissions and requests for confidential treatment must conform with the requirements of section 201.6 of the Commission's Rules of Practice and Procedure (19 CFR 201.6).

For further information concerning the conduct of the investigation and rules of general application, consult the Commission's Rules of Practice and Procedure, part 207, subparts A and B (19 CFR 207), and part 201, subparts A through E (19 CFR 201).

CONFERENCE: The Director of Operations of the Commission has scheduled a conference in connection with this investigation for 10 a.m. e.d.t., on Wednesday, May 27, 1981, at the U.S. International Trade Commission Building. Parties wishing to participate in the conference should contact the supervisory investigator for this investigation, Mr. Lynn Featherstone (202–523–0242). It is anticipated that parties in support of the petition for the imposition of antidumping duties and parties opposed to such petition will each be collectively allocated one (1) hour within which to make an oral presentation at the conference.

Further details concerning the conduct of the conference will be provided by the supervisory investigator.

INSPECTION OF THE PETITION: The petition filed in this case is available for public inspection at the Office of the Secretary, U.S. International Trade Commission.

This notice is published pursuant to section 207.12 of the Commission's Rules of Practice and Procedure (19 CFR 207.12).

By order of the Commission.

Issued: May 8, 1981.

KENNETH R. MASON,
Secretary.

In the Matter of
CERTAIN APPARATUS FOR THE CONTINUOUS PRODUCTION OF COPPER ROD } Investigation No. 337-TA-89

Notice of Commission Request for Comments Concerning Settlement Agreements

AGENCY: U.S. International Trade Commission.

ACTION: Request for public comments on proposed settlement agreements.

SUMMARY: On April 10, 1981, Southwire Co. of Carrollton, Ga., and Krupp GmbH and Krupp International, Inc. entered into settlements which, if approved, would result in termination of this investigation. This notice contains a synopsis of those agreements and seeks public comments upon them.

DATES: Comments will be considered if received within thirty (30s days of the date this notice appears in the *Federal Register*. Comment) should conform with Commission Rule 201.8 (19 CFR 201.8) and should be addressed to Kenneth R. Mason, Secretary, U.S. International Trade Commission, 701 E Street NW., Washington, D.C. 20436.

FOR FURTHER INFORMATION CONTACT: Jeffrey S. Neeley, Esq., Office of the General Counsel, U.S. International Trade Commission, 701 E Street NW., Washington, D.C. 20436; telephone 202-523-0359.

SUPPLEMENTARY INFORMATION: In connection with the Commission's investigation, under section 337 of the Tariff Act of 1930 (19 U.S.C. 1337), of alleged unfair methods of competition in the importation or sale of certain apparatus for the continuous production of copper rod in the United States, the complainant, the

Commission investigative attorney, and the respondents moved on April 21, 1981, for an order approving a settlement agreement.

This investigation began with publication by the Commission of a notice in the *Federal Register* on August 13, 1980 (45 F.R. 53923), stating that an investigation was being instituted to determine:

> whether there is a violation of subsection (a) of section 337 in the unauthorized importation of certain apparatus for the continuous production of copper rod, or in their sale, by reason that such apparatus are made in accordance with the claims of U.S. Letters Patent 4,129,170, the effect or tendency of which is to destroy or substantially injure an industry, efficiently and economically operated, in the United States.

Fried. Krupp GmbH of Essen, Federal Republic of Germany and Krupp International, Inc., of Harrison, N.Y. (collectively "Krupp"), were named as respondents. On October 29, 1980, the Commission issued a temporary exclusion order on apparatus that infringe the patent in question, except under a bond of 100 percent *ad valorem*. On February 3, 1981, the Commission voted to suspend this investigation until the date on which the U.S. Court of Customs and Patent Appeals makes its final decision in Appeals Nos. 80–19 and 80–21.

On April 10, 1981, the complainant and respondents entered into settlement agreements which could have the effect of terminating this investigation and settling other outstanding litigation between the parties. On April 21, 1981, the Krupp respondents, complainant Southwire Co., and the Commission investigative attorney filed a joint motion for an order approving the settlement entered into by Krupp and Southwire. A nonconfidential synopsis of that settlement follows:

Synopsis of settlement agreements

> The two settlement agreements entered into by the parties cover any patent, related technology, or trade secrets of the parties relating to apparatus for the continuous manufacture of copper rod. Under the terms of Agreement #1 Southwire and Krupp grant to each other mutual worldwide licenses for a specified amount of money for each copper rod line of 3000 sq. mm. (5 sq. in.) cast bar area and larger, which either company contracts for during the term of the agreement. Mutual worldwide royalty-free licenses are granted for systems of less than 3000 sq. mm cast bar area.
>
> Agreement #1 also provides that customers of both parties shall be granted royalty-free licenses for such copper rod systems for the full life of the patents, related technology, and trade secrets. Krupp agrees to a credit payment of a specified amount of money on the date that the agreement comes into force. The term of Agreement #1 is 10 years, renewable for 5-year periods by mutual consent. The agreement comes into force upon approval of the United States International Trade Commission, the Commission of the European Community, and, if necessary, the German authorities.

Agreement #2 provides that, as regards copper rod lines contracted for prior to the Agreement, Southwire will not bring suit against Krupp or any of its customers with respect to the use of copper rod lines under any of the Southwire patents now existing or now pending or for misappropriation of Southwire trade secrets. Southwire also agrees to dismiss with prejudice all complaints and appeals against Krupp now pending before any judicial tribunal. Krupp likewise agrees to dismiss all of its complaints and appeals pending against Southwire. Southwire further agrees to take all reasonable actions necessary to permit Krupp's customers or third party suppliers to purchase, install, or import spare or replacement parts for copper rod lines.

In consideration for the covenants and promises, Krupp agrees to pay Southwire a specified amount of money within 15 days of the effective date of the agreement. An addendum to Agreement #2 provides that, if for any reason any governmental authority rejects either of the agreements, the parties agree to return to good faith negotiations to reach a new settlement in light of the position taken by such authority. The addendum also provides that, if Southwire activates any legal or administrative proceedings prior to the settlement coming into force, Southwire will return to Krupp the above-mentioned amount. If Krupp reactivates such proceedings, however, Southwire need not return that money.

COMMENTS REQUESTED: In light of the Commission's duty to consider the public interest in this investigation, the Commission requests written comments from interested persons concerning the effect of the termination of this investigation based upon the settlement agreements upon (1) the public health and welfare, (2) competitive conditions in the U.S. economy, (3) the production of like or directly competitive articles in the United States, and (4) U.S. consumers. These written comments must be filed with the Secretary to the Commission no later than 30 days after publication of this notice in the *Federal Register*. The Commission will consider requests for oral argument or oral presentation on this matter if such requests are received in the Office of the Secretary not later than 15 days after publication of this notice in the *Federal Register*. Any person desiring to submit a document (or portion thereof) to the Commission in confidence must request *in camera* treatment. Such requests should be directed to the Secretary of the Commission and must include a full statement of the reasons why the Commission should grant such treatment. The Commission will either accept such submission in confidence or return it. All nonconfidential written submissions will be open for public inspection at the Secretary's office.

By order of the Commission.

Issued: May 11, 1981.

KENNETH R. MASON,
Secretary.

Index

U.S. Customs Service

	T.D.N.
Treasury Decisions:	
Carrier Bonds	81-146
Cotton and Manmade Fiber Textile Products—Restriction on entry:	
Haiti	81-147
Dominican Republic	81-148
Cotton Textile Products—Restriction on entry: Pakistan	81-153
Cotton, Wool and Manmade Fiber Apparel Products—Restriction on entry: Hong Kong	81-150
Cotton, Wool and Manmade Fiber Textile Products—Restriction on entry:	
Poland	81-149
Malaysia	81-151
Mexico	81-152
Foreign Currencies:	
Daily Certified Rates; May 4–8, 1981	81-154
Variance from Quarterly Rate; May 4–8, 1981	81-155
Customs Service Decisions:	
Carrier Control:	
Vessels of Chile Permitted to Transport Articles Described in Sections 4.93(b)(2) of the Customs Regulations Between Ports of U.S	81-106
Refund of Special Tonnage Tax and Light Money Assessed on a Vessel Pursuant to 46 U.S.C. 121 and 128	81-116
Various Methods of Shipping Petroleum Coke Between U.S. Ports through Canada in a Canadian Vessel	81-117
Conditionally Free Merchandise: Aircraft Parts; Certification Requirement Under Civil Aircraft Agreement	81-108
Constructed Value: Whether R&D Costs May be Shown as Reduction in Declared Profit as Opposed to Increase in Sales Price for Constructed Value	81-104
Classification:	
Plastic Napkin Ring	81-101
Entry for Test and Repair Certain Electronic Components of American Origin Used in the Foreign Assembly of Industrial Machinery	81-102
Export Value—Steel Plate	81-103
Heavy-Duty Transporters	81-105
Stock/Receiver With Separate Barrels for Use as a Rifle or Shotgun	81-109
Dionosil Oily, A Bronchographic Contrast Medium Used to Coat the Bronchial Walls	81-110
Antimony Trioxide With 3 Percent Diisodecyl Phthalate (DIDP)	81-111

	T.D.N.
Dutiable Status of Butynediol and Butanediol	81-112
Py 61 H, Chemical Product Used as a Copper Plating Bath Additive	81-113
Armonol, A Product Designed to Increase Gas Mileage	81-114
Entry: Envelopes Made and Printed for the United Nations by a West German Firm	81-115
GSP: Acceptability of Form A Marked "Copy" For Purposes of Establishing Country of Origin Under the Generalized System of Preferences	81-107
Manipulation in Bonded Warehouse: Assembly of Watch Heads and Repackaging of Spare Watch Parts as Manipulation under 19 U.S.C. 1562	81-118
Merchandise Control:	
Removal of Zone-Restricted Merchandise From a Foreign Trade Zone by Means of a TIB Entry Pursuant to Part 146 of the Customs Regulations	81-119
Person or Firm Not Proprietor of Customs Bonded Warehouse or Container Station Designated as Private Carrier for Transfer of Merchandise to FTZ	81-120
	Investigation No.
Decisions of the United States Court of International Trade:	
Canadian Tarpoly Co. v. United States International Trade Commission and Seased Air Corporation	337-TA-56

U.S. GOVERNMENT PRINTING OFFICE : 1981 O - 347-180

DEPARTMENT OF THE TREASURY
U.S. CUSTOMS SERVICE
WASHINGTON, D.C. 20229

OFFICIAL BUSINESS
PENALTY FOR PRIVATE USE, $300

POSTAGE AND FEES PAID
DEPARTMENT OF THE TREASURY (CUSTOMS)
(TREAS. 552)

15/23

Customs Bulletin

Regulations, Rulings, Decisions, and Notices concerning Customs and related matters

and Decisions

of the United States Court of Customs and Patent Appeals and the United States Court of International Trade

Vol. 15 JUNE 10, 1981 No. 23

NEWARK PUBLIC LIBRARY

JUN 30 1981

U. S. GOVT. PUBS.
DEPOSITORY 376

This issue contains

T.D. 81-156 through 81-158
C.S.D. 81-121 through 81-150
General Notice
Slip. Op. 81-42 through 81-44
Protest Abstracts P81/61 through P81/69
Reap. Abstracts R81/168 through R81/187
International Trade Commission Notices

THE DEPARTMENT OF THE TREASURY
U.S. Customs Service

T 1.11/3:

NOTICE

The abstracts, rulings, and notices which are issued weekly by the U.S. Customs Service are subject to correction for typographical or other printing errors. Users may notify the U.S. Customs Service, Logistics Management Division, Washington, D.C. 20229, of any such errors in order that corrections may be made before the bound volumes are published.

For sale by the Superintendent of Documents, U.S. Government Printing Office, Washington, D.C. 20402. Price: $2.25 (single copy domestic); $2.85 (single copy foreign). Subscription price: $85.00 a year domestic; $106.25 a year foreign.

U.S. Customs Service

Treasury Decisions

(T.D. 81-156)

Synopses of Drawback Decisions

The following are synopses of drawback rates issued March 25, 1981, to May 12, 1981, inclusive, pursuant to sections 22.1 through 22.5, inclusive, Customs Regulations.

In the synopses below are listed for each drawback rate approved under 19 U.S.C. 1313(b), the name of the company, the specified articles on which drawback is authorized, the merchandise which will be used to manufacture or produce these articles, the factories where the work will be accomplished, the date the statement was signed, the basis for determining payment, the Regional Commissioner to whom the rate was forwarded or issued by, and the date on which it was forwarded or issued.

DRA-1-09

Dated: May 21, 1981.

File: 213019.

GEORGE C. STEUART,
(For Marilyn G. Morrison, Director,
Carriers, Drawback and Bonds Division).

(A) Company: Alabama Metal Industries Corp.

Articles: Expanded metal; metal lath; steel framing; bar grating; suspended ceiling systems; and cold drawn bar, wire, and rod.

Merchandise: Hot and cold rolled steel sheet; galvanized steel sheet; hot rolled steel bar, wire, and rod.

Factories: Los Angeles, CA; Greenville, SC.

Statement signed: February 13, 1981.

Basis of claim: Appearing in.

Rate forwarded to Regional Commissioner of Customs: New York, April 21, 1981.

(B) Company: American Cyanamid Co.
Articles: Barium lithol red and calcium lithol red.
Merchandise: Tobias acid (2-naphthylamine-l-sulfonic acid).
Factory: Bound Brook, NJ.
Statement signed: October 1, 1980.
Basis of claim: Used in.
Rate forwarded to Regional Commissioner of Customs: New York, April 3, 1981.

(C) Company: Atlantic Packaging Inc., a div. of Atlantic Pepsi.
Articles: Canned carbonated beverages.
Merchandise: Hard refined sugar.
Factory: West Columbia, SC.
Statement signed: June 23, 1980.
Basis of claim: Appearing in.
Rate forwarded to Regional Commissioner of Customs: New York, March 25, 1981.

(D) Company: Continental Warp Knits, Inc.
Articles: Dyed or undyed nylon piece goods; dyed or undyed blended piece goods.
Merchandise: Nylon yarn.
Factory: Angier, NC.
Statement signed: November 24, 1980.
Basis of claim: Appearing in.
Rate forwarded to Regional Commissioner of Customs: New York, April 16, 1981.
Revokes: T.D. 67–202–R.

(E) Company: Danbar, Inc.
Articles: Automotive stampings.
Merchandise: Galvanized steel sheet, strip and blanks.
Factories: Warren and Mt. Clemens, MI.
Statement signed: September 17, 1980.
Basis of claim: Appearing in.
Rate forwarded to Regional Commissioner of Customs: New York April 3, 1981.

(F) Company: Data General Corp.
Articles: Computer systems; computer subsystems; peripheral computer equipment; semiconductor memory boards.
Merchandise: 16K dynamic RAM and 4K static RAM (random access memory).
Factories: Southboro, MA; Westbrook, ME; Cary, NC; Portsmouth, NH; Austin, TX.

best copy available

Statement signed: September 2, 1980.
Basis of claim: Appearing in.
Rate forwarded to Regional Commissioner of Customs: San Francisco, March 31, 1981.
Revokes: T.D. 80–243–G.

(G) Company: Emery Industries, Inc.
Articles: 3-(N,N-bisacetoxyethyl) amino-4-methoxy acetanilide.
Merchandise: 3-amino-4-methoxy acetanilide.
Factory: Lock Haven, PA.
Statement signed: December 11, 1980.
Basis of claim: Used in.
Rate forwarded to Regional Commissioner of Customs: Chicago, April 16, 1981.

(H) Company: Exxon Corp., Exxon Chemical Company U.S.A. Division.
Articles: Alcohols and plasticizers.
Merchandise: Olefins known as heptene, octene, nonene, and tetramer.
Factory: Baton Rouge, LA.
Statement signed: May 14, 1979.
Basis of claim: Used in, with distribution to the products obtained in accordance with their relative value at the time of separation.
Rate forwarded to Regional Commissioners of Customs: New York and Houston, April 14, 1981.

(I) Company: Flor-Quim, Inc.
Articles: Amyl cinnamic aldehyde.
Merchandise: N-heptaldehyde.
Factory: Patillas, PR.
Statement signed: July 10, 1980.
Basis of claim: Used in.
Rate forwarded to Regional Commissioner of Customs: New York, March 25, 1981.

(J) Company: Gould, Inc.
Articles: Lead oxide and lead alloys.
Merchandise: Pig lead and metallic antimony.
Factories: Los Angeles, CA; Portland, OR; Frisco, TX; Omaha, NE; St. Paul, MN; Dunmore, PA; Savannah, IL.
Statement signed: August 5, 1980.
Basis of claim: Appearing in.
Rate forwarded to Regional Commissioner of Customs: New York, March 26, 1981.
Revokes: T.D. 79–230–K.

(K) Company: Joyva Corp.
Articles: Candy products.
Merchandise: Hard refined sugar.
Factory: Brooklyn, N.Y.
Statement signed: October 6, 1980.
Basis of claim: Used in.
Rate forwarded to Regional Commissioner of Customs: New York, April 16, 1981.

(L) Company: Kimball International, Inc.
Articles: Upright and grand pianos.
Merchandise: Piano actions, keyboards, and hammers.
Factories: French Lick and West Baden, IN.
Statement signed: March 11, 1981.
Basis of claim: Appearing in.
Rate forwarded to Regional Commissioner of Customs: Chicago, April 21, 1981.

(M) Company: Eastman Kodak Co.
Articles: Coupler intermediates (PM 4529, 4530 and 4581); substituted alkyl ester (PM 1585).
Merchandise: Sodium methoxide; N, N-dimethyl formamide.
Factories: Kingsport, TN; Batesville, AR.
Statement signed: February 20, 1981.
Basis of claim: Used in.
Rate forwarded to Regional Commissioner of Customs: Baltimore, April 17, 1981.

(N) Company: Longyear Co.
Articles: Threaded drill rods (mid-body tubing only).
Merchandise: Cold drawn seamless mechanical steel tubing.
Factories: Minneapolis, MN; Roseville, MN (2).
Statement signed: February 13, 1981.
Basis of claim: Used in.
Rate forwarded to Regional Commissioner of Customs: Chicago, April 21, 1981.
Revokes: T.D. 79–214–L.

(O) Company: Mastic Corp.
Articles: Vinyl siding and accessories.
Merchandise: Powdered polyvinyl chloride (PVC) resin.
Factories: South Bend, IN; Stuarts Draft, VA.
Statement signed: January 26, 1981.
Basis of claim: Appearing in.
Rate forwarded to Regional Commissioner of Customs: New York, April 13, 1981.

(P) Company: Mercier Corp.
Articles: Fluorspar fluxes in form of briquettes, bricks, blocks; Ferrosilicon briquettes, bricks; blocks, Ferromanganese briquettes, bricks, blocks; Ferrosilicon/Ferromanganese briquettes, bricks, blocks.
Merchandise: Fluorspar containing over 97% calcium fluoride; Fluorspar containing from 70% to 97% calcium fluoride; Ferrosilicon; Ferromanganese.
Factories: Dearborn, MI; Baltimore, MD.
Statement signed: October 24, 1980.
Basis of claim: Appearing in.
Rate forwarded to Regional Commissioner of Customs: New York, March 25, 1981.

(Q) Company: Mobay Chemical Corp.
Articles: Isocyanates.
Merchandise: Desmodur PU 1844 (polyphenylene polymethylene isocyanate with high diphenylmethane diisocyanate content).
Factories: Baytown, TX; New Martinsville, WV.
Statement signed: November 26, 1980.
Basis of claim: Used in, with distribution to the products obtained in accordance with their relative value at the time of separation.
Rate forwarded to Regional Commissioner of Customs: New York, April 13, 1981.
Revokes: T.D. 78-233-P.

(R) Company: RCA Corp.
Articles: Television picture tubes (kinescopes).
Merchandise: Yoke assembly.
Factories: Marion, IN; Lancaster and Scranton, PA.
Statement signed: February 24, 1981.
Basis of claim: Appearing in.
Rate forwarded to Regional Commissioner of Customs: Baltimore, April 16, 1981.

(S) Company: Rockwell International Corp.
Articles: Finished axles, axle kits, components and finished parts.
Merchandise: Various specified rough castings and forgings.
Factory: Winchester, KY.
Statement signed: October 15, 1980.
Basis of claim: Used in, less valuable waste.
Rate forwarded to Regional Commissioner of Customs: New York, March 30, 1981.

(T) Company: The Sherwin-Williams Co.
Articles: Tobias acid.

Merchandise: Beta naphthol.
Factory: Chicago, IL.
Statement signed: February 24, 1981.
Basis of claim: Used in.
Rate forwarded to Regional Commissioner of Customs: New York, April 10, 1981.

(U) Company: Sony Magnetic Products, Inc. of America.
Articles: Video/audio magnetic cassette tapes (blank).
Merchandise: Plastic cassette parts.
Factory: Dothan, AL.
Statement signed: February 20, 1981.
Basis of claim: Appearing in.
Rate forwarded to Regional Commissioner of Customs: Los Angeles, April 13, 1981.

(V) Company: Star Manufacturing Co. of Oklahoma.
Articles: Pre-engineered building systems and component parts.
Merchandise: Galvanized steel coil and hot rolled steel coil.
Factories: Oklahoma City, OK; Homer City, PA; Cedartown, GA; Marysville, CA.
Statement signed: December 1, 1980.
Basis of claim: Appearing in.
Rate forwarded to Regional Commissioner of Customs: Houston, April 3, 1981.

(W) Company: Tubular Finishing Works, Inc.
Articles: Drill pipe; tool joints; upset and threaded seamless and ERW tubing.
Merchandise: Plain-end unfinished seamless drill pipe tubes; unfinished tool joints; seamless and ERW tubing.
Factory: Navasota, TX.
Statement signed: September 15, 1980.
Basis of claim: Appearing in.
Rate forwarded to Regional Commissioner of Customs: Houston, April 16, 1981.

(X) Company: Velsicol Chemical Corp.
Articles: Buthidazole, a herbicide, in technical form and wettable products.
Merchandise: Chloroacetaldehyde dimethyl acetal.
Factory: Beaumont, TX.
Statement signed: January 26, 1981.
Basis of claim: Used in.

Rate forwarded to Regional Commissioner of Customs: Houston, March 26, 1981.

(Y) Company: Volkswagen of America, Inc.
Articles: Various automobile stampings.
Merchandise: Cold rolled draw quality aluminum killed carbon steel sheet.
Factory: South Charleston, WV.
Statement signed: October 27, 1980.
Basis of claim: Appearing in.
Rate forwarded to Regional Commissioner of Customs: New York, March 30, 1981.

(Z) Company: Zilog.
Articles: Fabricated semiconductor die in wafer form.
Merchandise: Raw silicon wafers.
Factory: Cupertino, CA.
Statement signed: October 6, 1980.
Basis of claim: Used in.
Rate forwarded to Regional Commissioner of Customs: San Francisco, May 12, 1981.

(T.D. 81-157)

Synopses of Drawback Decisions

The following are synopses of drawback rates issued November 26, 1974, to April 28, 1981, inclusive, pursuant to sections 22.1 through 22.5, inclusive, Customs Regulations.

In the synopses below are listed for each drawback rate approved under 19 U.S.C. 1313(a), the name of the company, the specified articles on which drawback is authorized, the merchandise which will be used to manufacture or produce these articles, the factories where the work will be accomplished, the date the statement was signed, the basis for determining payment, the Regional Commissioner who issued the rate, and the date on which it was signed.

DRA-1-09

Filed: 213031.

Dated: May 22, 1981.

GEORGE C. STEUART
(For Marilyn G. Morrison, Director,
Carriers, Drawback and Bonds Division).

347-181 O - 81 - 2

(A) Company: Astralloy-Vulcan Corp.
Articles: Wear liners, wear plates, and other mining parts.
Merchandise: Imported alloy steel.
Factory: Birmingham, AL.
Statement signed: April 10, 1981.
Basis of claim: Appearing in.
Rate issued by Regional Commissioner of Customs: New Orleans, April 17, 1981.

(B) Company: CX Corp.
Articles: Photographic plate equipment and accessories.
Merchandise: Imported photographic and electronic parts, components and sub-assemblies.
Factory: Seattle, WA.
Statement signed: February 11, 1981.
Basis of claim: Appearing in.
Rate issued by Regional Commissioner of Customs: San Francisco, March 12, 1981.

(C) Company: Custom Engineering Inc.
Articles: Diesel engine generator sets.
Merchandise: Imported metal generator skids.
Factory: Peoria, IL.
Statement signed: February 10, 1981.
Basis of claim: Used in.
Rate issued by Regional Commissioner of Customs: New York, April 2, 1981.

(D) Company: Duplo U.S.A. Corp.
Articles: Duplicating machines.
Merchandise: Imported parts for duplicating machines.
Factory: Gardena, CA.
Statement signed: April 8, 1981.
Basis of claim: Appearing in.
Rate issued by Regional Commissioner of Customs: Los Angeles, April 28, 1981.

(E) Company: Freedland Industries Corp.
Articles: Hot and cold rolled steel sheet and strip cut to various sizes.
Merchandise: Imported hot rolled and cold rolled steel sheet and strip in coil.
Factory: Dearborn, MI.
Statement signed: November 4, 1980.
Basis of claim: Appearing in.
Rate issued by Regional Commissioner of Customs: New York, April 15, 1981.

(F) Company: G. F. Vaughan Tobacco Co.
Articles: Redried tobacco products.
Merchandise: Imported and drawback unprocessed stemmed and unstemmed leaf tobacco.
Factory: Lexington, KY.
Statement signed: October 14, 1980.
Basis of claim: Used in, less valuable waste.
Rate issued by Regional Commissioner of Customs: Chicago, March 18, 1981.
Revokes: T.D. 75–208–V.

(G) Company: Hitachi Magnetics Corp.
Articles: Hicorex base and additive powders in powder form, milled or unmilled, or contained in magnets formed from a blend of the powders.
Merchandise: Imported praseodymium oxide, samarium oxide, gadolinium oxide.
Factory: Edmore, MI.
Statement signed: March 24, 1981.
Basis of claim: Appearing in.
Rate issued by Regional Commissioner of Customs: Chicago, April 21, 1981.

(H) Company: Hitron Corp.
Articles: Medical diagnostic equipment.
Merchandise: Imported medical apparatus and parts; data processing equipment.
Factory: East Providence, RI.
Statement signed: March 26, 1981.
Basis of claim: Appearing in.
Rate issued by Regional Commissioner of Customs: Boston, April 10, 1981.

(I) Company: Hydra-Mac, Inc.
Articles: Loaders.
Merchandise: Imported engines (diesel and gas).
Factory: Thief River Falls, MN.
Statement signed: October 30, 1980.
Basis of claim: Used in.
Rate issued by Regional Commissioner of Customs: New York, April 15, 1981.

(J) Company: Lone Star Manufacturing Co., Inc.
Articles, Air conditioning units, adaptor kits, idle compensation kits.
Merchandise: Imported valves, hoses, nipples, clips, clamps, rings and relays.

Factory: Fort Worth, TX.
Statement signed: February 20, 1981.
Basis of claim: Appearing in.
Rate issued by Regional Commissioner of Customs: San Francisco, March 23, 1981.

(K) Company: Macdraw, Inc.
Articles: Wire drawing machines, annealers and spoolers.
Merchandise: Imported parts for wire drawing machines, annealers and spoolers.
Factory: Williamsport, MD.
Statement signed: March 4, 1981.
Basis of claim: Used in.
Rate issued by Regional Commissioner of Customs: Baltimore, March 18, 1981.

(L) Company: Micro Tracers, Inc.
Articles: Feed additives "Sanders Special" Microtracer F -Red/Blue.
Merchandise: Imported food dyes (FD and C Red #3 food color and patent Blue V food color).
Factory: San Francisco, CA.
Statement signed: April 14, 1981.
Basis of claim: Used in.
Rate issued by Regional Commissioner of Customs: San Francisco, April 20, 1981.

(M) Company: Minnesota Mining and Manufacturing Co.
Articles: QA 166 Y Flurandrenolide tape, bulk.
Merchandise: Imported Flurandrenolide (QA 103Q).
Factories: Cottage Grove and St. Paul, MN; Brookings, SD; Cordova, IL.
Statement signed: April 6, 1981.
Basis of claim: Used in.
Rate issued by Regional Commissioner of Customs: Chicago, April 22, 1981.

(N) Company: Miss Elliette, Inc.
Articles: Dresses or dress parts.
Merchandise: Imported yardage.
Factory: Vernon, CA.
Statement signed: April 7, 1981.
Basis of claim: Used in.
Rate issued by Regional Commissioner of Customs: Los Angeles, April 8, 1981.

(O) Company: Pak-Mor Manufacturing Co.
Articles: Refuse collection trucks.
Merchandise: Imported Mercedes-Benz chassis.
Factories: Duffield, VA; San Antonio, TX.
Statement signed: December 10, 1980.
Basis of claim: Used in, less valuable waste.
Rate issued by Regional Commissioner of Customs: Baltimore, March 16, 1981.

(P) Company: Palette Sample Card Co., Inc.
Articles: Sample swatch sets and sample swatches in book form.
Merchandise: Imported piece goods.
Factory: Long Island City, NY.
Statement signed: February 20, 1981.
Basis of claim: Used in.
Rate issued by Regional Commissioner of Customs: New York, April 15, 1981.

(Q) Company: Perfection Finishers, Inc.
Articles: Mox processed flux coated electrodes (welding rods).
Merchandise: Imported flux coated electrodes (welding rods).
Factory: Wauseon, OH.
Statement signed: November 21, 1980.
Basis of claim: Used in.
Rate issued by Regional Commissioner of Customs: New York, April 2, 1981.

(R) Company: RTE–ASEA Corp.
Articles: Packaged substations also known as "Power Delivery Systems".
Merchandise: Imported electrical components.
Factory: Waukesha, WI.
Statement signed: March 27, 1981.
Basis of claim: Used in.
Rate issued by Regional Commissioner of Customs: Chicago, April 22, 1981.

(S) Company: R. J. Reynolds Tobacco Co.
Articles: Cigarettes.
Merchandise: Imported cigarette filter rods.
Factory: Winston-Salem, NC.
Statement signed: February 11, 1981.
Basis of claim: Used in.
Rate issued by Regional Commissioner of Customs: Miami, April 2, 1981.

(T) Company: Eli Sandman Co.
Articles: Resin impregnated woven fabrics and discs.
Merchandise: Imported woven fabrics.
Factory: Worcester, MA.
Statement signed: August 22, 1974.
Basis of claim: Used in.
Rate issued by Regional Commissioner of Customs: Boston, November 26, 1974.

(U) Company: Santa Fe Systems Co.
Articles: Pressure piping skids.
Merchandise: Imported pipe-carbon steel.
Factory: Santa Fe Springs, CA.
Statement signed: April 3, 1981.
Basis of claim: Used in.
Rate issued by Regional Commissioner of Customs: Los Angeles, April 20, 1981.

(V) Company: Sanyo Manufacturing Corp.
Articles: Television receivers, microwave ovens and close-captioned adapters.
Merchandise: Imported parts and components.
Factory: Forrest City, AR.
Statement signed: March 27, 1981.
Basis of Claim: Appearing in.
Rate issued by Regional Commissioner of Customs: New Orleans, April 24, 1981.

(W) Company: Skyway Recreation Products, a Division of Skyway Machine, Inc.
Articles: Bicycle wheels known as TUFF WHEEL I, TUFF WHEEL II, and TUFF WHEEL '16'.
Merchandise: Imported Suntour front axle assemblies with hub assembled, Suntour rear unit hub assembly (assembled), Suntour spare parts and hardware, Bendix coaster brakes and Nankai Tekko front axles.
Factory: Redding, CA.
Statement signed: March 10, 1981.
Basis of claim: Appearing in.
Rate issued by Regional Commissioner of Customs: San Francisco, April 8, 1981.

(X) Company: South Coast Terminals.
Articles: Marine lubricating oil.
Merchandise: Imported lube oil concentrates.

Factory: Houston, TX.
Statement signed: April 13, 1981.
Basis of claim: Used in.
Rate issued by Regional Commissioner of Customs: Houston, April 20, 1981.

(Y) Company: Thermo King Corp.
Articles: Refrigerated transportation units.
Merchandise: Imported 4 cylinder industrial diesel engines and 2 and 3 cylinder diesel engines.
Factories: Minneapolis, MN; Louisville, GA.
Statement signed: December 11, 1980.
Basis of claim: Used in.
Rate issued by Regional Commissioner of Customs: New York, April 15, 1981.

(Z) Company: Willing B. Wire Corp.
Articles: .007 and .0082 inch CB–3 specialty wire.
Merchandise: Imported .217 or .250 inch CB–3 specialty steel rod.
Factories: Beverly and Cinnaminson, NJ.
Statement signed: March 20, 1981.
Basis of claim: Used in.
Rate issued by Regional Commissioner of Customs: Baltimore, April 1, 1981.

(T.D. 81–158)

Foreign Currencies—Variances From Quarterly Rate

The following rates of exchange are based upon rates certified to the Secretary of the Treasury by the Federal Reserve Bank of New York, pursuant to Section 522(C), Tariff Act of 1930, as amended (31 U.S.C. 372(c)), and reflect variances of 5 per centum or more from the quarterly rate published in Treasury Decision 81–82 for the following countries. Therefore, as to entries covering merchandise exported on the dates listed, whenever it is necessary for Customs purposes to convert such currency into currency of the United States, conversion shall be at the following rates.

Austria schilling:

May 11, 1981	$0.062035
May 12, 1981	.061767
May 13, 1981	.061881
May 14, 1981	.061237
May 15, 1981	.061501

Belgium franc:		
May 11, 1981		$0.026738
May 12, 1981		.026667
May 13, 1981		.026724
May 14, 1981		.026385
May 15, 1981		.026560
Brazil cruzeiro:		
May 11–15, 1981		$0.012057
People's Republic of China yuan:		
May 11, 1981	Quarterly	($0.612107)
May 12–13, 1981		$0.578938
May 14–15, 1981		.576070
Denmark krone:		
May 11, 1981		$0.139130
May 12, 1981		.138658
May 13, 1981		.138696
May 14, 1981		.137703
May 15, 1981		.137988
Finland markka:		
May 11, 1981		$0.233100
May 12, 1981		.232369
May 13, 1981		.232721
May 14, 1981		.230787
May 15, 1981		.230415
France franc:		
May 11, 1981		$0.181686
May 12, 1981		.180701
May 13, 1981		.180750
May 14, 1981		.179582
May 15, 1981		.179614
Germany deutsche mark:		
May 11, 1981		$0.437828
May 12, 1981		.435635
May 13, 1981		.435540
May 14, 1981		.432713
May 15, 1981		.433088
Hong Kong dollar:		
May 11–15, 1981	Quarterly	($0.189036)
Ireland pound:		
May 11, 1981		$1.6020
May 12–13, 1981		1.5940
May 14, 1981		1.5825
May 15, 1981		1.5820

Italy lira:		
May 11, 1981		$0.000881
May 12–13, 1981		.000877
May 14, 1981		.000868
May 15, 1981		.000867
Iran rial:		
May 11–15, 1981	Quarterly	($0.13236)
Netherlands guilder:		
May 11, 1981		$0.393546
May 12, 1981		.392157
May 13, 1981		.391773
May 14, 1981		.388954
May 15, 1981		.389560
Norway krone:		
May 12, 1981		$0.176445
May 13, 1981		.176523
May 14, 1981		.175778
May 15, 1981		.175670
Philippines peso:		
May 11–15, 1981	Quarterly	($0.130039)
Portugal escudo:		
May 11, 1981		$0.016529
May 12, 1981		.016483
May 13, 1981		.016474
May 14, 1981		.016340
May 15, 1981		.016393
Singapore dollar:		
May 11–15, 1981	Quarterly	($0.478469)
Spain peseta:		
May 11, 1981		$0.010953
May 12, 1981		.010939
May 13, 1981		.010965
May 14, 1981		.010854
May 15, 1981		.010887
Sweden krone:		
May 11, 1981		$0.205339
May 12, 1981		.204415
May 13, 1981		.204290
May 14, 1981		.203335
May 15, 1981		.203004
Switzerland franc:		
May 11–12, 1981		$0.481812
May 13, 1981		.481232
May 14, 1981		.480538
May 15, 1981		.483325

347-181 O - 81 - 3

Thailand baht (tical):	
May 11–15, 1981	Quarterly ($0. 048426)
United Kingdom pound:	
May 11, 1981	$2. 1010
May 12, 1981	2. 0875
May 13, 1981	2. 0775
May 14, 1981	2. 0663
May 15, 1981	2. 0745
Venezuela bolivar:	
May 11–15, 1981	Quarterly ($0. 232883)

(LIQ–03–01 O:C:E)

Dated: May 15, 1981.

KENNETH A. RICH,
Chief,
Customs Information Exchange.

ERRATUM

In Customs Bulletin Vol. 15, No. 17, dated April 29, 1981, in T.D. $81–89, the following rate should be corrected.

India rupee:	
March 27, 1981	$0.120337

U.S. Customs Service

Customs Service Decisions

DEPARTMENT OF THE TREASURY,
OFFICE OF THE COMMISSIONER OF CUSTOMS,
Washington, D.C.

The following are decisions made by the United States Customs Service where the issues involved are of sufficient interest or importance to warrant publication in the Customs Bulletin.

SALVATORE E. CARAMAGNO
(For the Director,
Office of Regulations and Rulings).

(C.S.D. 81-121)

Classification: Applicability of the U.S. Value as a Basis of Appraisement Where Merchandise Is Freely Sold to Unrelated U.S. Purchasers

Date: November 7, 1980
File: CLA-2:RRUCV
065122 BG

Re Decision on Application for Further Review of Protest No. 1001-9-011316, dated November 21, 1979.

AREA DIRECTOR OF CUSTOMS,
New York Seaport,
New York, New York.

DEAR SIR: The issue presented by this protest is whether a United States value, section 402(c), Tariff Act of 1930, as amended by the Customs Simplification Act of 1956 exists for the subject merchandise. The concerned appraising officer has deemed constructed value, section 402(d), to be the proper basis of appraisement.

The record before us shows that the protestant, (corporate name) imported titanium dioxide pigments from its wholly owned subsidiary in West Germany. The transfer price did not include the value of an assist supplied by the importer as well as an amount for profit and some general expenses. There were no other sales of such or similar merchandise upon which to base an export value. Protestant does not

dispute the elimination of export value, section 402(b), as a basis of appraisement.

All parties agree that the merchandise under protest was freely sold in the United States in the usual wholesale quantities and in the ordinary course of trade. The importer has claimed as deductions from the United States selling price under section 402(c)(1), no amount for profit and ten percent for general expenses. (Corporate name) is the only importer of the same class or kind as the merchandise undergoing appraisement.

The Import Specialist rejected United States value as a basis of appraisement because the freely offered United States selling price is not calculated to compensate for the missing or deficient elements of value in the transfer price. Also the Import Specialist does not consider the importer's general expenses and profit (i.e. no profit) to be usual under section 402(c)(1). According to the Import Specialist, if the importer's claimed general expenses and profit are deducted from the United States selling price, the United States value would be equal to the defective transfer price. Not to accept as statutory export value a transfer price that is admittedly defective, but to accept as statutory a United States value that is the same or approximately the same as the defective transfer price is contrary to the legislative intent of the value statute.

Protestant contends that section 402(g) does not eliminate United States value as a basis of appraisement even where exporters and importers are related and the export sales price is defective. Section 402(g) applies only to subsection (c)(1) United States value determinations (i.e. the statutory allowances for general expenses and profit) and may not be used to disregard United States value as a basis of appraisement in its entirety. In addition, protestant contends that its figures for general expenses and profit are usual and should be used.

The initial determination to be made is whether the merchandise is freely sold or in the absence of sales offered for sale in the principal market of the United States for domestic consumption in the usual wholesale quantities and in the ordinary course of trade. In this case it is not in dispute that the merchandise is freely sold in the United States to unrelated purchasers at published price list prices. Therefore, the only issue is what are the proper allowances for usual general expenses and profit under section 402(c)(1). If there is only one importer of merchandise of the same class or kind as the merchandise undergoing appraisement, then the amount of general expenses and profit to be deducted under section 402(c)(1) is the amount actually realized by the importer. In the instant case it has been found that there are no other importers of merchandise of the same class or kind. Therefore, the actual general expenses and profit of the protestant

would be used unless section 402(g) is applicable. This section provides that in determining the allowances under section 402(c)(1) transactions between related parties may be disregarded where an element of value does not fairly reflect the amount usually reflected in sales of merchandise of the same general class or kind as that undergoing appraisement. Absent persuasive evidence that an element of value is not fairly reflective of an amount usually reflected, section 402(g) may not be employed to disregard transactions between importer and related exporters in determining United States value. *United States* v. *Geigy Chemical Corporation et al.*, C.A.D. 1155, 63 CCPA 1 (1975).

There is no evidence in record before us to show that the absence of profit is not *bona fide* in this case. Although little, if any, profit is reflected in the export transaction, no profit is incurred in the United States sales transaction as well. The protestant explains that the titanium dioxide market in the United States is extremely competitive and that it is sometimes necessary to sell a particular product at a loss in order to compete and maintain its market share in the United States. The protestant's product line as a whole generates a small percentage of profit. This transaction does not involve a situation where there is a rigged low price between a related importer and exporter for export and a large amount of profit is claimed on the sale in the United States in order to obtain a low appraisement. There is no evidence here to suggest a shifting of profits from the export transaction to the United States sales transaction for the purpose of avoiding duties.

It should also be noted that an importer may waive the allowance for profit under section 402(c)(1). *Millmaster International Corp.* v. *United States*, 57 CCPA 108, C.A.D. 987 (1970). Since an importer is permitted to waive the deduction for profit so that the allowance given is zero, it follows that there is no reason to reject a claim for zero amount of profit. Therefore, we find no basis in the record before us for rejecting United States value in this case because of the absence of profit in the United States transaction.

Customs has frequently ruled that the fact that an assist has been supplied to the exporter does not require that the transaction be disregarded. As the importer must bear the costs associated with providing the assists, these costs are a factor that enters into the computation of a selling price within the United States. ORR 74–0055, dated January 25, 1974. The importer, however, cannot deduct this cost from his selling price. Section 402(c)(1) allows deductions for general expenses usually incurred in connection with sales made in the United States. This section does not authorize deductions from the United States selling price of the costs incurred in providing assists or other expenses assumed for the foreign manufacturer. These costs are not

incurred in connection with sales in the United States but are, rather, manufacturing costs and are, therefore, not permitted as allowances under section 402(c)(1).

On the other hand, the fact that the transfer price may not cover all production costs does not affect the validity of the general expenses incurred in the United States on the *sale* of the merchandise.

Therefore, if it is satisfactorily determined that the general expenses claimed by the protestant are in fact general expenses incurred in connection with sales in the United States as required by section 402(c)(1), we find no basis for rejecting United States values as basis of appraisement.

Accordingly, the protest is granted to the extent outlined above. Your file is returned.

(C.S.D. 81-122)

Value: Proper Application of Statutory United States Value as a Basis of Appraisement

Dated: November 12, 1980
File: CLA-2:RRUCV
055394 BS

The importer ("X") has entered into a long term contract with an unrelated distributer ("Y") to furnish the latter with finished men's and boys' jeans. The material for the jeans is purchased by X from Y, cut into components in the United States, and then sent together with zippers, trimming, etc., to X's subsidiaries in Mexico for assembly into the finished product. The completed garments are then imported under the provisions of item 807.00, Tariff Schedules of the United States (TSUS). X's entire production is sold to Y pursuant to the contract.

Under the agreement, the price paid by Y is budgeted but changes from year to year. There is an agreed upon profit for X which is, uniformly, 6 percent of the budgeted cost. When actual costs exceed the amount budgeted, X's profit is reduced to a factor of less than 6 percent. However, this is remedied by continually changing the budgeted cost in ensuing extensions of the contract so as to bring them into line with actual experience and, thus, the profit of 6 percent is very closely adhered to.

The parties agree that statutory export value (section 402(b), Tariff Act of 1930, as amended), is not applicable since the merchandise is not freely sold or offered for sale for exportation to the United States (i.e., acts as a selected purchaser within the meaning of section 402 (f)(b) of the Act, and the price between X and the foreign assembler does not contain all elements of value). Further, our New York office

advises that an export value for similar merchandise can not be ascertained.

It is X's opinion that the basis of appraisement should be United States value, section 402(c) of the Act. On the other hand, the New York Import Specialist believes that United States value is inapplicable since the U.S. sales are confined to the distributor who furnishes the material to the importer. While the Director of Classification and Value at Laredo, Texas, does not specifically argue that this basis of appraisement is inapplicable, he disagrees with certain of the cost submissions made by the importer.

Pursuant to section 402(c), United States value is established by using as a base the price at which the merchandise is freely sold or offered for sale in the principal market of the United States for domestic consumption. In the case of a selected purchaser the goods must be sold or offered for sale at a price which fairly reflects the market value. Since the purpose of this provision is to approximate export value, certain deductions are made from the selling price in the United States, i.e., Customs duties, ocean freight, insurance, and the usual general expenses and profit added by sellers of imported merchandise of the same class or kind as the merchandise undergoing appraisement.

Based upon the circumstances of sale between X and Y, and the fact that they are unrelated, we believe that the record supports a finding that United States value is the appropriate basis of appraisement, i.e., that the price between the parties fairly reflects the market value. We are of the opinion that in the instant case United States value will recover all elements of cost that might be missing in export value, since in pricing its product for sale in the United States, X will have to consider all of the costs involved in the manufacture of the merchandise, including the cost of the raw materials purchased from the distributor.

In connection with the allowances to be made for general expenses and profit, which have been a major concern to Customs officials and importers in the past, we believe some comments are in order.

The primary concern of Customs has been that rigged export prices in related party transactions will affect the allowances for general expenses and profit reflected in the domestic sales even though such transactions are between unrelated parties. Thus, in instances where many of the general expenses that would ordinarily be incurred by an unrelated foreign supplier are instead incurred by the related U.S. company, the allowance for general expenses and profit might appear to be inordinately high. A similar situation would result where the foreign related's books reflect little or no profit. This subject was an issue confronting the Court of Customs and Patent Appeals in *United States* v. *Geigy Chemical Corp.*, 63 CCPA 1, CAD 1155 (1975).

In that case, the trial court had found that section 402(g) (which gives the Government the authority to disregard certain transactions between described related parties) could not be used to disregard the export transaction, since in the domestic transaction, which is the subject matter of statutory U.S. value, the parties were unrelated. The Appellate Term disagreed with this principle, finding that construction of the statute to narrow. The court stated that the decision of the trial court ". . . disregards the fundamental fact that rigged prices in the export market may materially affect the importer's profits and general expenses in the United States market". The court concluded that transactions between related exporters and importers could be disregarded even though the allowances are realized in sales in the United States between nonrelated parties.

The Court of Customs and Patent Appeals adopted a middle of the road approach. The Court agreed that section 402(g) may be applied to the determination of United States value when the importer and exporter are related, but only under certain circumstances. In the Court's view, when the importer and its customers are unrelated, section 402(g) may be applied to disregard the export transactions *only* if the facts establish "an element of value does not fairly reflect the amount usually reflected in sales . . . of merchandise of the same general class or kind as that undergoing appraisement". Thus, if the profit and general expenses, contemplated as allowances used in calculating the United States value figure, are those "usually" occurring in connection with sales in the United States market, of merchandise of the same class or kind as the merchandise undergoing appraisement, then section 402(g) can not be utilized to disregard the export transaction.

Applying these principles to the instant case, the importer's actual general expenses and profit are to be accepted as the appropriate allowances unless you determine by persuasive evidence that they are not the usual percentages occurring in connection with sales *in the United States market* of merchandise of the same class or kind as the merchandise undergoing appriasement.

(C.S.D. 81-123)

Entry: Applicability of Duty-Free Exemption Status to Articles Shipped to Then Returned From the Virgin Islands

Date: November 12, 1980
File: ENT 1-01 RRUEE
714571 M

This ruling concerns whether a watch purchased and shipped to the Virgin Islands by an individual for his use there is entitled to the duty-

free exemption for personal effects taken abroad when he returns to the United States with that watch.

Issue: 1. Is a watch purchased by a resident in the United States, and shipped abroad for his use there, entitled to the duty-free exemption for personal effects upon its return to the United States with the resident?

2. Is the watch entitled to duty-free entry in the Virgin Islands?

Facts: An American resident purchased a Japanese-made watch at a local retail store in Los Angeles. Instead of taking the watch with him from the store where he bought it, he had the store ship the watch to him at his hotel in the Virgin Islands of the United States, where he was going for a vacation.

When the watch was imported in the Virgin Islands, duty was assessed by the Virgin Islands Government on the watch at the rate of 6 percent of the value of the watch. When the resident returned to the United States, he was assessed duty by U.S. Customs on his watch because Customs at the port of entry contended that the watch did not accompany him when he went abroad and was, therefore, not entitled to the personal effects exemption for returning residents.

The American resident contends that his watch was part of his personal effects and as such, he was entitled to the duty-free exemptions for personal effects both under U.S. Virgin Islands laws and the Tariff Schedules of the United States (TSUS), and thus should have been able both in the Virgin Islands and in the United States to enter such articles free of duty.

Law and analysis: Although the Virgin Islands of the United States is an insular possession of the United States, it is not part of the customs territory of the United States. The customs territory of the United States is defined in General Headnote 2 of the Tariff Schedules of the United States (19 U.S.C. 1202), as including the 50 States, the District of Columbia, and Puerto Rico. Therefore, for Customs purposes, when one goes to the Virgin Islands it is the same effect as if one went to a foreign country. The articles brought back from the Virgin Islands are subject to duty, unless specifically exempted from duty. Likewise, unless specifically exempted from duty by Virgin Island law, the article brought into the U.S. Virgin Islands by a U.S. resident is subject to Virgin Islands duty.

Section 1 of the Organic Law of the Virgin Islands of the United States of 1936, provides that unless exempted elsewhere in the statute, an import duty of 6 percent of the value of the merchandise shall be assessed on articles imported there. Exemption 12 of section 2 provides that "Traveling outfits and furniture a-moving already used when they are the property of the traveler or the person removing" are entitled to duty-free entry. The term "traveling outfits" has been interpreted as including jewelry. We believe that a watch is a standard

347-181 O - 81 - 4

commodity worn by a person, and may be considered to be part of his traveling outfit. However, the term "traveling outfits" connotates that the items involved are accompanying the individual. Furthermore, that term is qualified by the words "already used." Certainly, a new watch shipped to the Virgin Islands neither would be accompanying the individual nor would it be used. Therefore, we believe that the watch involved was not exempt from Virgin Islands duty.

Item 813.10, TSUS, provides that all personal and household effects imported by, or for the account of, a returning resident arriving in the United States are entitled to duty-free entry provided such personal and household effects were "taken abroad by him or for his account." The question raised in this case concerns the meaning of "taken abroad." Does this term mean that the personal and household effects must have accompanied the resident or the person who took such effects out on behalf of the resident, or may such effects be shipped abroad for the resident's account?

We are unaware of any court cases or customs rulings concerning the meaning of this term as it appears in item 813.10, TSUS. However, the tools of trade provision (item 810.20, TSUS) has a similar provision. It provides that tools of trade, etc., imported by or for the account of any person arriving in the United States from a foreign country is entitled to duty-free entry provided such tools, etc., were "taken abroad by him or for his account." We have issued numerous rulings to the effect that the term "taken abroad" as used in item 810.20, TSUS, is broad enough to include such articles shipped abroad. The criteria in such cases was that in order for such articles to be exempt as tools of trade under item 810.20, TSUS, such tools must be sent out and returned in the name of an individual person, rather than a partnership or corporation, and the person on whose account the tools were taken out must be absent from the United States during some portion of the time when the tools were outside of this country. For an example of the latest ruling on this matter, see C.S.D. 80–155 (Ruling letter 711263 M dated November 7, 1979).

We do not see why the words "taken abroad" as used in item 813.10, TSUS, should be any more restricted and preclude a resident from being entitled to that personal exemption because his personal effects were shipped to him abroad. Thus, we believe that the ruling letters interpreting the term "taken abroad" as set forth in item 810.20, TSUS, as broad enough to include such articles shipped abroad, may be applied by analogy to item 813.10, TSUS. Therefore, we believe that the resident was entitled to the duty-free exemption for personal effects under item 813.10, TSUS, for his watch.

Holding: 1. A watch purchased by a resident in the United States and shipped abroad for his use there is entitled to the duty-free ex-

emption for personal effects upon its return to the United States with the resident.

2. The watch is not entitled to duty-free entry in the Virgin Islands because by being shipped, rather than worn by the person, it is not considered part of the person's traveling outfit.

(C.S.D. 81-124)

Classification: Various Valves Used in Hydraulic Systems

Date: November 13, 1980
File: CLA-2:RRUCGC
061563 JLV

Re Internal Advice 117/79 concerning classification of certain valves used in hydraulic systems.

DISTRICT DIRECTOR OF CUSTOMS,
477 Michigan Avenue,
Detroit, Michigan.

DEAR SIR: In your memorandum dated May 23, 1979, you requested advice (No. 117/79) concerning the classification of modular valves used in hydraulic systems. The following decision is our response.

Issue: Are certain modular valves classifiable under the provision for taps, cocks, valves, and similar devices, however operated, used to control the flow of liquids, gases, or solids, all the foregoing and parts thereof, in items 680.20 through 680.28, Tariff Schedules of the United States (TSUS), or under the provision for machinery parts not containing electrical features and not specially provided for, in item 680.90, TSUS?

Facts: The articles in question are various valves which are designed for use in a modular group and which perform a variety of functions within a hydraulic system. Valves other than the modular group are also designed to perform in hydraulic systems and are generically the same.

The valves, in addition to regulating the flow of fluid, are designed to control the fluid for the purpose of controlling other machines, pistons, or mechanisms. Informational literature offered by the manufacturer groups the valves into two categories: pressure control and directional control.

Pressure control valves limit pressure, regulate reduced pressure in systems, or function when there is a change in operating pressure. These valves are named for primary functions, such as relief valves, sequence valves, brake valves, counterbalance valves, and reducing valves.

Directional valves control the direction of flow but vary considerably in construction and operation. They are generally called check valves by the manufacturer and are described according to their principal characteristics, such as the type of internal valving element, method of actuation, and number of flow paths.

Models DGMC2 and DGMC are pressure relief valves designed as two stage spring loaded poppet pilot-operated valves with spring loaded piston. Model DGMX1 is a pressure reducing valve designed as a self-operated spring loaded sliding spool valve. Model DGMR1 is a backpressure valve and Model DGMR1 is a pressure sequence valve. Both are of the same construction as the DGMX1. The above pressure control valves are actuated as a result of a change in operating pressure and have adjustable tensions.

Model DGMGC values are self-operated spring loaded poppet direct check valves which allow flow in one direction only. Model DGMPC series valves are spool pilot-operated spring loaded poppet twin check valves. The DGMFN series valves are non-compensated flow control valves with an integral spring loaded poppet check valve. This configuration allows free flow in one direction and metered flow in the other. The DG4V is a single or double solenoid actuated, sliding spool four-way directional control valve. These directional control valves generally have a cracking pressure of 5 psi. and are not adjustable.

Law and analysis: The proper classification of these hydraulic valves is questioned on the basis of two ruling letters: Headquarters letters dated November 30, 1970 (file 007588) and ORR Ruling 207–70.

In the letter of November 30, 1970, directional control valves were classified under the *eo nomine* provision for valves, except if their function is "the control and monitoring of other machines or mechanisms with which they are used wherein the flow merely serves as the driving medium." Under that rationale, such articles would be classifiable as machinery parts in item 678.50 or 680.90, TSUS, depending on whether or not they contain electrical features.

ORR Ruling 207–70 apparently concerned pneumatically operated devices that were more than valves because they controlled and monitored the machines or mechanisms in which they were used. The ruling is not clear as to whether the devices were used in machinery to control other mechanisms, or were articles containing valves or were valve actuators.

The above rulings are not patently wrong if the devices in question were valve actuators or other devices which performed a function that was more than merely controlling or regulating the flow of a fluid. Both rulings used the same rationale to hold that certain devices were not classifiable as valves, i.e., the function of the devices was to control and monitor machines or mechanisms in which they were used. However, if

a device is a valve as defined in the tariff provision for valves and is not a machine or part of a machine which by design contains a valve in order to perform the control function, then the device should be classified under the *eo nomine* provision for valves.

Numerous Headquarters decisions classify valves under the provision for valves in items 680.20–680.28, TSUS (effective January 1, 1980, items 680.14–680.28 TSUS), whether or not the end use of the valves is in a brake system, a hydraulic pump or motor, or other machine. The provision for valves is an *eo nomine* provision, not a use provision. Therefore, articles which are known in trade and industry as valves, and which perform the function of controlling the flow of liquids, gases, or solids, are to be classified under the provision for valves.

Inasmuch as complete descriptive information is not available on the merchandise considered in ORR Ruling 207–70 and Headquarters ruling letter dated November 30, 1970 (file 007588), those rulings are limited to the facts in those cases. Furthermore, both of the above cases are clarified to the extent that the classification of merchandise known as valves is not determined by the end use of the valves. Unless the merchandise is by construction more than a valve or is a valve actuator it is classifiable as a valve.

Holding: The modular pressure and directional control valves, and generically comparable valves, which are designed for inclusion in hydraulic systems, are classifiable under the applicable provision for valves, in items 680.20–680.28, TSUS (for merchandise entered on or after January 1, 1980, in items 680.14–680.28, TSUS). The tariff classification of merchandise known in trade as valves and used to control the flow of liquids, gases, or solids, is not determined by the end use of the valves.

Effect on other rulings: ORR Ruling 207–70 (file 431.24, October 9, 1969) and Headquarters ruling letter dated November 30, 1970 (file 007588) are limited and clarified as noted above.

This ruling does not affect prior rulings concerning devices which appear to operate as valves but are, in fact, devices which divide or distribute fluids. For example, in P.R.D. 76–1 (file 094200) the "Delta control valve" segregates and distributes precise volumes of liquid to the desired number to output taps by the trivial operation of closing unneeded output taps. It divides the input flow into equal-volume outputs, and is properly classifiable in item 678.50, TSUS.

Similarly, the devices in Headquarters letter of May 5, 1977 (file 049194), October 26, 1977 (file 052492), and February 5, 1976 (file 042283), are distribution devices that serve to divert fluids rather than merely control the flow. These devices are more than valves and are not classifiable as valves.

(C.S.D. 81–125)

Vessels: Transportation, Use and Commingling of Fish Processing Supplies on Non-Coastwise-Qualified Vessels in Violation of 46 U.S.C. 883

Dated: November 13, 1980
File: RRUCDC
104874 JL

This ruling concerns the transportation and use of fish processing supplies on non-coastwise-qualified processing vessels.

Issues: May a foreign-built U.S. registered fish processing vessel take on board supplies to be utilized in freezing and processing fish at a point within U.S. territorial waters and unlade the processed fish products at another point in U.S. territorial waters without violating 46 U.S C. 883?

Facts: A non-coastwise-qualified fish processing vessel intends to lade supplies such as salt, boxes, packaging materials and other items to be used or consumed in the processing of fish at one location within U.S. territorial waters (a coastwise point) and unlade fish products at another coastwise point. The inquirer asks whether the unlading of the fish products will violate 46 U.S.C. 883. The inquirer is of the opinion that the materials will undergo a substantial tranformation pursuant to General Headnote 6(b), TSUS, and therefore no violation will occur.

Law and analysis: 46 U.S.C. 883 prohibits the transportation of merchandise between two coastwise points by a non-qualified vessel.

The initial question presented is whether the subject processing supplies are "merchandise" within the purview of section 883. Headquarters case 103982, published as C.S.D. 80–46, held that such articles were not ship's equipment or stores. C.S.D. 80–46 also held that fish transported for any part of a coastwise movement on a non-coastwise qualified vessel are merchandise transported in violation of section 883. It then follows that both the fish and processing supplies in the factual situation presented are "merchandise" within the purview of section 883.

The second question presented is whether the transformation of the supplies, that is their commingling with the fish which are processed, packed, and unladed as fish products, will serve to change their status as merchandise for purposes of section 883. The General Headnote cited by the inquirer (6(b)) addresses the treatment to be accorded containers or holders for imported merchandise under the Tariff Schedules of the United States (TSUS). 46 U.S.C. 883 is not part of the TSUS and in no way addresses or conditions its application to articles transported in contravention thereof, or on their treatment as

imported merchandise. Accordingly, General Headnote 6(b) is not relevant to the determination of the issue presented.

A change in the condition of merchandise transported between two coastwise points is pertinent when the merchandise is landed and processed at an intermediate port or place other than a coastwise point. See section 4.80b(a), Customs Regulations, as amended July 19, 1979 (44 Fed. Register 140, page 42178). However, in the instant case there is no landing and processing at an intermediate port or place other than a coastwise point. Rather, the processing will occur on a vessel during the course of a continuous voyage between two coastwise points. Therefore the change in the condition of the merchandise transported is not determinative of the resolution of the issue.

Holding: Under the facts presented, fish processing supplies laded on a non-coastwise-qualified vessel at one coastwise point and subsequently utilized in the processing and packaging of fish into fish products which are unladed at a second coastwise point are transported in violation of 46 U.S.C. 883.

Effect on other rulings: Ruling 104080 amplified.

(C.S.D. 81-126)

Export Value: Termination Payment Forms Part of Constructed Value of Imported Aircraft

Dated: November 13, 1980
File: CLA-2:RRUCVC
542179 RP

To: District Director of Customs, St. Louis, Missouri 63105.
From: Director, Classification, and Value Division.
Subject: Request for internal advice no. 100/80.

The referenced Internal Advice request concerns the appraisement of certain aircraft imported from Great Britain. Between May 1972, and July 1975, the (importer) imported 21 aircraft which were manufactured by (exporter). The importer contracted with the exporter to purchase 41 aircraft pursuant to a collaboration agreement dated November 14, 1969, a marketing agreement dated April 1, 1970, and a purchase agreement dated September 29, 1972. On May 2, 1974, the parties executed a supplementary agreement which reduced the number of aircraft to be purchased by the importer from 41 to 21. One of the provisions of the supplementary agreement called for the payment of $2,500,000.00 from the importer to the exporter.

The issue raised in the Internal Advice request concerns whether or not the $2,500,000.00 payment forms part of the dutiable value of the 21 aircraft.

It is the position of your office that the $2,500,000.00 represents a payment for termination of the purchasing of aircraft by the importer, and that, as such, the termination payment forms part of the constructed value for the 21 aircraft actually imported. The payment would be amortized over the 21 aircraft which were imported. You indicate that it would not be unrealistic to assume that a contract reduction of 20 aircraft would reduce the usual wholesale quantities, and thus, raise individual prices. In the alternative, you cite Headquarters decision 541436, dated May 14, 1977, to support the dutiability of the termination payment.

It is the opinion of counsel for the importer that the $2,500,000.00 payment to the exporter does not form part of the dutiable value of the aircraft, since the termination payment was based on damages to the exporter for future production of the aircraft and in no way relates to the aircraft previously manufactured. Counsel mainains that the appraised value of the aircraft is to be determined on the date of exportation and should not be ascertained based on actions taken subsequent to the date of exportation. Accordingly, since all but three of the 21 aircraft were exported prior to the May 2, 1974, supplementary agreement, it is counsel's position that the supplementary agreement does not affect the entered values ascribed to the imported aircraft (the price for the three aircraft exported after the execution of the supplementary agreement was not changed by the agreement). In view of the above, counsel contends that the proper basis of appraisement for the 21 imported aircraft is export value, as reflected by the unit price established under the original purchase agreement.

After a careful review of the evidence presented, it is our opinion that the so-called "termination payment" does not form part of the dutiable value for the 21 aircraft actually imported. We agree with the Chief, Duty Assessment Branch I/II in New York that the supplementary agreement is not a termination agreement, but rather, a renegotiation of basic contracts. The salient provisions of the supplementary agreement include a reduction in the number of aircraft which the importer was required to purchase, an agreement to repurchase unsold airframe spares, and an option to purchase 10 additional aircraft at a higher price. The payment in question was mutually agreed upon by the parties as consideration for the supplementary agreement.

Although not expressly stated in the supplementary agreement, we believe that the $2,500,000.00 payment was based on damages to the exporter for future production and does not relate to the 21 aircraft actually imported. It is not uncommon for parties to a contract to renegotiate agreements and arrange for the payment of damages where one of the parties wishes to amend or terminate previous agreements. Failure to renegotiate could subject the breaching party to suit, as

well as impair or destroy the business relationship between the contracting entities.

It is also our opinion that Headquarters ruling 541436, dated May 14, 1977, is not applicable in the instant case. In that decision, Headquarters determined that a payment pursuant to a termination clause of a contract formed part of the constructed value of certain imported steel tower material. However, in the steel tower case, the termination payment clause was executed as part of the original purchase agreement prior to importation. In the instant case, the contract for the payment of $2,500,000.00 was made 2 years after the original purchase agreement and after all but three of the subject 21 aircraft had been exported to the United States.

In addition, we note that the instant transactions took place between a selected purchaser, and an unrelated seller, whereas the steel tower case involved related party transactions. In the case of *International Armament Corporation*, v. *United States*, 83 Cust. Ct.—C.D. 4827 (1979), the Customs Court held that prices paid by a selected purchaser to a wholly unrelated seller should be accepted as fairly reflecting market value, in the absence of any indication that the prices were, in any manner, contrived or rigged, or that the dealings were not at arm's length and bona fide in all respects. In the case before us, we find nothing in the record which warrants a conclusion that the subject transactions were not at arm's length or bona fide, and it is our position that the $2,500,000.00 payment is not attributable to the original purchase price of the 21 aircraft actually imported.

Accordingly, we conclude that the payment does not form part of the dutiable value of the 21 aircraft. Also, it is our opinion that export value represents the proper basis of appraisement for the subject merchandise, as reflected by the original contract purchase price, provided that all elements of value are included in that price.

(C.S.D. 81-127)

Bonds: Cancellation of TIB When Photos Processed From Imported Film Have Been Destroyed

Dated: November 14, 1980
File: CON-9-RRUCDB
211531 MM

Issues: 1. Whether a temporary importation bond (TIB) may be cancelled based on a certificate of destruction by a company to the district director if the company does not maintain records that would support such destruction.

2. Whether a company may base its certificate of destruction on the fact that items are not physically on hand and therefore were destroyed.

3. When pictures taken to test film packs are maintained for 1 year is the film considered destroyed when the film is exposed or when the photographs are disposed of 1 year later?

4. Whether TIBs may be cancelled by substituting the same type of item imported under various TIBs on a FIFO basis.

Facts: A variety of photographic equipment, including film, was imported under item 864.30, Tariff Schedules of the United States, for durability and quality testing. Records are not maintained to allow specific identification of the imported materials entered under TIB so that the destroyed or exported articles can be traced back to a particular TIB. Most of the imported articles are destroyed after reliability testing by reducing the articles to scrap and dumping the scrap in a landfill site. The company then submits a letter to Customs certifying that the articles were destroyed in testing and are being reduced to scrap.

Those items that are not destroyed are exported. However, since no records are maintained identifying which particular TIB covers any one item being exported an export shipment may cover items imported under more than one TIB.

The film is imported for quality control testing to ascertain if the film details the proper colors. When the film comes into the receiving area the date is written on the carton. A majority of each shipment is used in taking pictures immediately and a small portion is put in storage as part of a 6-month aging process to be used at the end of that period. Both the initial photos taken and the photos taken at the end of the 6-month period are each kept for 1 year at which time they are further examined to determine if the colors have faded before disposal. Although no direct identification can be made between the imported entered under TIB and the actual film used in testing, the company contends that the film has been destroyed in testing since there are no film packs on hand at the end of the 6-month period.

Law and analysis: Section 10.39(a) of the Customs Regulations provides in part as follows:

> . . . In the case of articles entered under item 864.30, Tffari Schedules of the United States, which are destroyed because of their use for the purposes of importation, the bond shall not be cancelled unless there is submitted to the district director a certificate of the importer that the articles were destroyed during the course of a specifically described use, and the district director is satisfied that the articles were so destroyed as articles of commerce within the bond period (including any lawful extension.) . . .

In the case of *American Gas Accumulator Co.* v. *United States*, T.D. 43642, 56 Treas. Dec. 368 (1929), the Customs Court held that for the purpose of cancelling temporary importation bonds, the term "destroyed" means that the articles imported no longer are articles of commerce. "In other words, if articles were destroyed to such an extent that they were only valuable in commerce as old scrap they still would be articles of commerce to which duty attaches upon importation, and therefore, could not be said to have been destroyed." In view of this we have held that scrap could be considered destroyed as an article of commerce, by burying it under Customs supervision in a landfill since the cost of extracting the scrap would exceed its value.

Because the photographic equipment has not been destroyed as an article of commerce during the testing operation but is in fact destroyed when buried in the landfill, the bond cannot be cancelled by the submission of a certificate of destruction.

If the facts were that the articles were destroyed in testing and a certificate of destruction were applicable, the district director would still have to be satisfied that the destruction took place and occurred within the bond period. Without supporting documentation, the fact that the items are not physically on hand is not conclusive evidence that the articles were destroyed properly and within the bond period.

Concerning when destruction occurs to the film, the film is actually used (not destroyed) when the photos are taken. It appears the testing is made on the film product (photos) and not the film itself. Under these circumstances because the photos must be made to test the quality of the color, the film should have been entered under item 864.05, TSUS, for processing into photos for subsequent testing under item 864.30, TSUS. The TIB could then be cancelled upon destruction of the photos under Customs supervision.

With regard to the issue of cancelling the TIBs on a FIFO basis by substituting like merchandise admitted under any TIB the Customs Service has not required direct identification if the importer could show that the imported fungible merchandise was not commingled with domestic articles and that all articles imported were properly exported by identifiable lot number.

Holding: 1. A certificate of destruction is applicable only when the imported merchandise has been destroyed as an article of commerce *in the course of the testing operation* (*emphasis added*).

2. When certificates of destruction are applicable they must be supported by satisfactory evidence that the articles were destroyed properly within the bond period.

3. For TIB purposes, film may be considered destroyed when the

photos processed from the film have been destroyed either in the testing process, or subsequent to it under customs supervision.

4. Cancellation of TIBs on a FIFO basis is acceptable if the importer can show that the imported merchandise has not been commingled with domestic merchandise and all imported articles have been exported properly by identifiable lot number.

(C.S.D. 81–128)

Value; Export: Inland Freight Charges Included in Appraised Export Value of Merchandise

Date: November 17, 1980
File: CLA-2-RRUCV
065064 CW

Re Application for Further Review, Protest No. 0401–9–000525.
DISTRICT DIRECTOR OF CUSTOMS,
Boston, Massachusetts.

DEAR SIR: The issue involved in the above-referenced protest concerns whether the appraised value of the merchandise at issue should include the cost of inland freight from the factory in France to the port of shipment.

The record reveals that the merchandise (glass fibers) encompassed by the four entries subject to this protest was sold by (Importer) to the protestant (Protestant Importer) on a C&F basis. The merchandise was entered and appraised at invoiced unit values less nondutiable charges which included only the cost of ocean freight. Export value, section 402(b) of the Tariff Act of 1930, as amended by the Customs Simplification Act of 1956, was determined to be the proper basis of appraisement. While the importer is related to the seller, we have no reason to believe from the record that the importer is a selected purchaser.

The protestant maintains that as the seller, (Importer) sold similar merchandise on an ex-factory basis to (Importer), during the same time period as the sales of the subject merchandise to (Importer) appraisement should be at invoiced unit values less ocean freight and inland freight charges. In support of its contention, protestant has submitted a copy of a letter from the seller which indicates that sales at ex-factory prices were made to (Importer) during the period February to June, 1978. The national import specialist in New York confirms that commencing February 21, 1978, shipments of similar merchandise from (Importer) were exported to ———— a non-related importer, at ex-factory terms.

Since inland freight charges from the factory or the principal market to the port of exportation are expenses which generally accure after the merchandise is packed and ready for shipment to the United States, such expenses are not *ordinarily* held to be a part of export value. *United States* v. *Lyons*, 13 Ct. Cust. Appls. 639, T.D. 41484 (1926), *Albert Mottola* v. *United States*, 46 CCPA 17, C.A.D. 689 (1958). However, inland freight charges have been held frequently by the courts to be part of dutiable export value where those charges are always included in the selling price of the merchandise. *Plywood & Door Northern Corp.* v. *United States*, 62 Cust. Ct. 1044, A.R.D. 256 (1969). Thus, as stated by the Court in *Aceto Chemical Co., Inc.* v. *United States*, 51 CCPA 121, C.A.D. 846 (1964):

> . . . if there is no other price than the one which includes the freight charges, then under settled law, the freight charge is inextricably bound up as an integral part of the purchase price and may not be allowed.

In order to ascertain whether inland freight charges are bound up in the value of the merchandise to be appraised, the appraising officer should determine if purchasers have a *bona fide* option to buy ex-factory without the inclusion of such charges.

Before applying the foregoing principles to the facts of this case, we should note that the shipments which are the subject of this protest were exported from France on the following dates:

Entry No.:	*Date of export*
131931	December 30, 1977.
129464	February 4, 1978.
160523	June 19, 1978.
140664	March 4, 1978.

The essential question to be answered is whether, at the above-stated times of exportation of the subject merchandise, purchasers had a *bona fide* option to purchase at ex-factory prices. The national import specialist recommends appraisement at ex-factory terms only with respect to the two shipments which were exported after February 21, 1978, on the grounds that prior to that date the Customs Service had no evidence of freely offered ex-factory terms.

We are in agreement with the national import specialist. As a general rule, sales or offers for sale subsequent to the date of exportation of the merchandise undergoing appraisement cannot be used to establish export value. *Spanexico, Inc.* v. *United States*, 75 Cust. Ct. 123, C.D. 4616 (1975). Consequently, since we have no evidence that ———— sold or offered to sell at ex-factory prices at the times of exportation of the merchandise covered by Entry Nos. 131931 and

129464, we have no alternative but to hold that the dutiable export value of this merchandise includes inland freight charges.

However, as a result of the ex-factory sales to ———— we are satisfied that a *bona fide* option to buy at ex-factory prices did exist at the times of exportation of the merchandise covered by Entry Nos. 160523 and 140664. These two entries, therefore, should be reliquidated with appraisement at invoiced unit values less ocean freight and inland freight charges.

In accordance with the above discussions, you are directed to grant the protest in regard to Entry Nos. 160523 and 140664 and deny the protest in regard to Entry Nos. 131931 and 129464. Your file is returned.

(C.S.D. 81–129)

Classification: Qualified Authorization for Classification in Item 807.00, TSUS, of Certain Bra Straps Imported Into the U.S. on an Aggregate Basis

Dated: April 6, 1981
File: CLA–2 CO:R:CV
068013 JR

Your letter of December 23, 1980, appeals our ruling to you dated November 18, 1980 (CLA–2:R:CV:MSP, 063041 HDB). This ruling held that tariff treatment under item 807.00 of the Tariff Schedules of the United States (TSUS) could not be authorized on an aggregated basis with respect to certain bra straps present in finished bras imported by your client, (corporate name)

BACKGROUND

The information contained in your letter of December 23, 1980, and in your earlier submission dated April 25, 1979, indicates that (name) imported during the period between June 1972 and January 1975, approximately 2.02 million dozen bras assembled at plants located in Costa Rica, Honduras, and Jamaica. Of the straps involved in the assembly of the bras, approximately 1.5 million dozen pairs (the "A" straps) were either made in the United States and shipped abroad for assembly with other bra parts, or were themselves assembled abroad from U.S. components and then assembled with other bra parts into finished bras. The remaining bra straps, some 520,000 dozen pairs (the "B" straps), had been assembled in Costa Rica from U.S. components, returned to the U.S. under item 807.00, TSUS, and then reexported for assembly with other bra parts into finished bras.

When the finished bras were imported into the U.S., (name) claimed

item 807.00, TSUS, treatment for all of the bra straps involved. It does not appear that any attempt was made by (name) at the time of the entry of the bras to distinguish between the "A" straps and the "B" straps or to specify the amount of either variety included in each entry.

A penalty action was initiated by Customs against (name) in 1976, in connection with the importation of the bras described above. One of the issues involved in the penalty action was the applicability of item 807.00, TSUS, to the bra straps. Although item 807.00, TSUS, treatment was originally claimed for all of the bra straps, (name) now acknowledges that the "B" straps do not qualify as U.S. components for purposes of item 807.00, TSUS, and, consequently, that a duty allowance cannot be claimed under that provision for the "B" straps. However, it continues to be (name) position that the "A" straps are entitled to item 807.00, TSUS, treatment notwithstanding the fact that the quantity of "A" straps present in each of the entries involved cannot be specified. (name) contention is based upon the application of the item 807.00, TSUS, provisions on an "aggregate" basis—that is, treating all of the entries involved as a whole, rather than individually.

A request for a ruling permitting the application of item 807.00, TSUS, to the "A" straps on an aggregated basis was contained in your letter to this office, on behalf of (name) dated April 25, 1979. Our response, dated November 18, 1980, held that the aggregated approach advocated by (name) failed to satisfy a basic condition of item 807.00, TSUS—that U.S. components be present in each entry for which a duty allowance under that provision is claimed.

DISCUSSION

In your letter of December 23, 1980, which appealed our ruling of November 18, 1980, you argue that, because of the absence of legislative history or judicial decisions specifying the manner in which Customs is to determine the quantity and value of the U.S. components in the articles presented for entry under item 807.00, TSUS, Customs has the discretion to use the aggregated approach so long as the substantive requirements of item 807.00, TSUS, are satisfied. You also argue that the use of the aggregated approach is consistent with modern business and accounting practices and, in (name) situation, would fully protect the revenue.

DETERMINATION

After careful reconsideration of your letters of April 25, 1979, and December 23, 1980, we have decided to permit the application of the provisions of item 807.00, TSUS, to the "A" straps on an aggregated

basis. The use of the aggregated approach with respect to the entries in question will be conditioned, however, on the furnishing by (name) of such information as may be required by Customs to establish conclusively the quantity and origin of the "A" straps, as well as such other information as may be required to assure the full protection of the revenue.

Subject to the satisfaction of the foregoing conditions, our ruling of November 18, 1980, is reversed.

(C.S.D. 81-130)

Foreign Trade Zones: Several Issues Relating to Color Television Sets Manufactured in U.S.; Manufactured Abroad and Imported into the U.S.

Date: December 12, 1980
File: FOR-1-RRUCDB L 210902

Issues: Several issues are raised relating to (1) color television sets (CTVs) manufactured in the United States, and (2) CTVs manufactured abroad and imported into the United States. With respect to the domestically manufactured CTVs,

1. May such CTVs be taken into a foreign-trade zone (FTZ) for exportation upon application by the manufacturer?

2. May such "zone-restricted" CTVs be sold at wholesale in the FTZ by the manufacturer to an unrelated third party or parties?

3. After CTVs having zone-restricted status have been "exported" to a foreign country, may they be returned to Customs territory for domestic consumption?

With respect to CTVs manufactured aborad,

1. May such CTVs acquire zone-restricted status and, if so, may the status be acquired by the importer entering them into bonded warehouse without payment of duty and then transferring them to a FTZ for exportation?

2. Do the answers to questions 2 and 3 relating to domestically manufactured CTVs apply equally to imported CTVs?

3. May the zone-restricted foreign merchandise (CTVs manufactured abroad) be transferred from the FTZ to a Customs bonded warehouse for exportation and be exported directly from such warehouse?

Facts: No specific factual situation is submitted.

Law and analysis: Addressing first the issues related to CTVs manufactured in the United States, 19 U.S.C. 81c provides in part that "(F)oreign and domestic merchandise of every description . . .

may . . . be brought into a zone . . . except as otherwise provided in this chapter . . .". Section 146.11, Customs Regulations (19 CFR 146.11), similarly provides that "(M)erchandise of every description . . . may be brought into a zone unless prohibited by law . . .". Accordingly, CTVs manufactured in the United States may be admitted into a FTZ upon proper application.

The fourth proviso of 19 U.S.C. 81c provides in part: "That under the rules and regulations of the controlling Federal agencies, articles which have been taken into a zone from Customs territory for sole purpose of exportation . . . shall be considered exported for the purposes of"—

> (a) the drawback, warehousing, and bonding, or any other provisions of the Tariff Act of 1930, as amended, and the regulations thereunder; and
> (b) the statutes and bonds exacted for the payment of drawback, refund, or exemption from liability for internal-revenue taxes and for purposes of the internal revenue laws generally and the regulations thereunder.

Section 146.25(a), Customs Regulations (19 CFR 146.25(a)), provides that:

> Articles taken into a zone from Customs territory for the sole purpose of exportation, destruction . . . or storage shall be given zone-restricted status upon proper application. Such articles may not be returned to Customs territory except when the Board deems such return to be in the public interest.

It is clear that under 19 U.S.C. 81c domestic merchandise may be taken into a FTZ for exportation or any other purpose set out in that section. The inquirer states that zone-restricted status will be requested for the CTVs admitted to the FTZ since they will be admitted for the sole purpose of exportation. There is no indication in the submission that zone-restricted status will be requested for any of the purposes in subparts (a) and (b) of the fourth proviso of 19 U.S.C. 81c, noted above. Nevertheless, we see no reason why zone-restricted status should not be granted upon proper application.

Zone-restricted CTVs may be sold at wholesale in the FTZ to unrelated third parties. As previously noted, 19 U.S.C. 81c provides that "(F)oreign and domestic merchandise . . . may be . . . sold . . . except as otherwise provided in this chapter". The only restriction on sales in a FTZ is found in 19 U.S.C. 81o(d) which provides that no retail trade shall be conducted within a FTZ except under permits issued by the grantee and approved by the Board.

The third issue is whether domestically manufactured CTVs with zone-restricted status may be returned to Customs territory for consumption after being exported from the FTZ to a foreign country.

347-181 O - 81 - 6

An exportation has been defined by the courts as "a severance of goods from a mass of things belonging to this country with an intention of uniting them with a mass of things belonging to some foreign country". 17 Op. Atty, Gen, 579 (1883). See also *Swan & Finch Company* v. *United States*, 190 U.S. 143 (1903); *F. W. Myers & Company Inc.* v. *United States*, 29 Cust. Ct. 202 (1952), C.D. 1468; and *United States* v. *National Sugar Refining Company*, 39 C.C.P.A. 96 (1951), C.A.D. 470.

The inquirer submits the CTVs may not be returned to Customs territory after having been exported to a foreign country citing the Senate Finance Committee Report (S. Rept. 1107) when the fourth provisio to section 3 of the Foreign-Trade Zones Act was being considered in 1949, *United States* v. *National Sugar Refining Company*, *supra*, and section 146.47, Customs Regulations (19 CFR 146.47).

The inquirer does not state whether the domestic CTVs placed in the FTZ with the status of zone-restricted are placed there for one of the purposes set out in the fourth proviso of 19 U.S.C. 81c. We have been orally informed by the inquirer that the merchandise would qualify for readmission to the customs territory under the known standards of any agency and would not be placed in the FTZ in zone-restricted status to avoid any liability or the laws or regulations of any agency.

It is our opinion that zone-restricted articles exported from a FTZ to a foreign country may be returned to Customs territory upon compliance with applicable law and regulations. The pertinent language of the fourth provisio of 19 U.S.C. 81c provides that articles "shall be considered to be exported" for the purposes stated thereunder. The statute grants a special benefit to users of a FTZ upon condition that articles placed in the FTZ for one of the purposes stated in the fourth proviso to 19 U.S.C. 81c are not returned from the FTZ to Customs territory without the approval of the Foreign-Trade Zones Board. It does not otherwise alter the concept of "exportation" as set out in 17 Op. Atty. Gen. 579, and consistently followed by the courts and the Customs Service.

The second part of the request relates to CTVs manufactured abroad and exported to the United States. The first question asks whether imported CTVs may acquire zone-restricted status and, if so, may the status be acquired by the importer entering them into a Customs bonded warehouse and then transferring them to a FTZ for exportation.

Section 146.25(d), Customs Regulations (19 CFR 146.25(d)) provides that merchandise entered for warehousing and transferred to a FTZ, other than temporarily for manipulation and return to Customs

territory as provided for in section 146.13, shall have the status of zone-restricted merchandise when admitted into the FTZ.

The second question asks whether the answers to questions 2 and 3 relating to CTVs manufactured in the United States apply equally to imported CTVs. They do apply equally to domestic and imported merchandise noting, however, that our answer to the third question is general absent specific information on the purpose of placing the CTVs in the FTZ with the status of zone-restricted.

The third question asks whether zone-restricted CTVs may be transferred from the FTZ to a Customs bonded warehouse for exportation and exported directly from such warehouse.

The Customs Regulations currently permit such a transfer only when the Foreign-Trade Zones Board rules that it would be in the public interest. The procedure is set forth in sections 146.25(d) and 146.47(a), Customs Regulations (19 CFR 146.25(d) and 146.47(a)). The Customs Service has taken the position that such transfers should be allowed in a letter dated August 11, 1978 (FOR-1-02-R: CD:D S, 209110), and, on the same date, proposed amendments to the Customs Regulations for this purpose. However, the amendments have not yet been approved.

Holding: The holdings on the several issues, in the order presented, are as follows:

CTVs Manufactured in the United States

1. CTVs manufactured in the United States may be admitted into a FTZ for exportation and may be granted zone-restricted status upon proper application.

2. CTVs manufactured in the United States, and admitted to the FTZ with zone-restricted status may be sold at wholesale in the FTZ to an unrelated third party or parties.

3. Merchandise in a FTZ with zone-restricted status is considered to be exported only for the purposes set out in the fourth proviso of 19 U.S.C. 81c. Without specific information as to the purpose of placing the CTVs in the FTZ with zone-restricted status we are unable to rule whether, upon subsequent exportation to a foreign country, they may be returned to the Customs territory for consumption. In general, however, merchandise exported from a FTZ, whether with zone-restricted status or not, may be returned to the Customs territory upon compliance with applicable law and regulations.

CTVs Manufactured Abroad and Exported to the United States

1. CTVs manufactured abroad and exported to the United States may acquire zone-restricted status and may do so by being entered into a Customs bonded warehouse and then withdrawn for transfer to a FTZ for exportation.

2. The answer to issue 2 relating to CTVs manufactured in the United States applies equally to CTVs manufactured abroad

and exported to the United States. The answer to issue 3 relating to CTVs manufactured in the United States applies equally to CVTs manufactured abroad and exported to the United States insofar as no specific reason for the transfer to a FTZ with zone-restricted status is given. If the CTVs are transferred to a FTZ with zone-restricted status solely for compliance with the warehousing provisions of the Tariff Act of 1930, as amended, they may be returned to the Customs territory of the United States upon compliance with applicable law and regulations following an exportation from the FTZ to a foreign country.

3. Under existing regulations, zone-restricted merchandise may not be transferred from the FTZ to a Customs bonded warehouse for exportation. The Customs Service has proposed amendments to the Customs Regulations to permit a transfer for this purpose; however, the proposed amendments have not been approved.

(C.S.D. 81-131)

Drawback: Substitution of Domestic Reconstituted Tobacco Scrap for Flue-cured Scrap Tobacco

Date: November 20, 1980
File: DRA-1-RRUCDB
211224 NK

Issue: Whether reconstituted tobacco scrap is of the same kind and quality as flue-cured scrap tobacco or Burley scrap tobacco for substitution drawback purposes.

Facts: Reconstituted tobacco is described as a product manufactured entirely of tobacco materials consisting of whole tobacco stems of the flue-cured and Burley types, tobacco stem scrap, tobacco dust and fines. The materials are manufactured into sheet form with water used to dissolve the binders that occur naturally in tobaccos to allow the tobacco fibers to be arranged into a base sheet. After the tobacco fiber base sheet has been formed, the binders that have been extracted by the water are concentrated by removing the water added. The concentrated extract, in turn, is impregnated into the fiber base, or web, and acts as the binder of the whole, making a sheet of pure tobacco ingredients.

Reconstituted tobacco is also known as Homogenized Tobacco Leaf. This product is defined as; "Tobacco sheet made from scrap leaf, whole leaf, and some stems, ground finely and made into a paste. The process is patterned after paper making."

Reconstituted tobacco sheet is used as a substitute for natural cigar binders and wrappers.

A processor proposes to substitute domestic reconstituted sheet tobacco cut into scrap form for imported flue-cured scrap tobacco or

Burley scrap tobacco for use in the production of cigarettes for drawback.

Law and analysis: The substitution drawback law (19 U.S.C. 1313(b)) requires that imported designated merchandise and the domestic substituted merchandise used to produce articles for drawback must be of the same kind and quality.

The regulations of the United States Department of Agriculture (7 CFR, parts 30 and 29) define classes and types of tobaccos and set forth standard grades. These regulations are useful guidelines in assisting the Customs Service in determining the same kind and quality questions for the substitution of domestic tobaccos for imported tobaccos under the drawback law. In applying these standards, the Customs Service gave notice on January 30, 1980 (T.D. 80–57) that it had ruled that imported and domestic flue-cured scrap tobaccos as defined in 7 CFR 29.1169, used to produce cigarettes, were of the same kind and quality for substitution drawback. We also ruled that imported and domestic Burley scrap tobaccos as defined in 7 CFR 29.3157, used to produce cigarettes, were of the same kind and quality for substitution drawback. However, we did not rule that flue-cured scrap tobacco and Burley scrap tobacco were of the same kind and quality. Likewise, we are of the opinion that reconstituted tobacco in scrap form as described above is not of the same kind and qualtiy as flue-cured scrap tobacco (7 CFR 29.1169) or Burley scrap tobacco (7 CFR 29.3157) for substitution drawback.

Holding: Reconstituted sheet tobacco in scrap form is not of the same kind and quality as flue-cured scrap tobacco or Burley scrap tobacco for substitution drawback.

Alternative: The Customs Service would consider a drawback proposal to substitute domestic reconstituted sheet tobacco in scrap form for imported designated reconstituted sheet tobacco in scrap form for use in the production of cigarettes for drawback. Specifications should be included in the proposal to show same kind and quality.

(C.S.D. 81–132)

Vessels: Treatment of Lightering Vessels Carrying Alaska North Slope Crude Oil

Date: November 24, 1980
File: VES–5–02–RRUCDC
104526 DR

To: Regional Commissioner of Customs, Houston, Texas 77002.
From: Chief, Carrier Rulings Branch.

Subject: Customs Treatment of Vessels Carrying Alaska North Slope Crude Oil—Your Memorandum ENT–1–01–0:I EJG (February 29, 1980).

This ruling, in response to the subject memorandum, is concerned with the reporting requirements for lightering vessels arriving with Alaska North Slope (ANS) crude taken on board in the Gulf of Mexico from vessels which had laded the crude at an onshore facility in Panama.

Issue: Whether U.S.-registered vessels which lighter ANS crude from tankers which transport the crude from storage facilities in Panama to a point in the Gulf of Mexico are required to report their arrival and present a manifest at United States ports of destination.

Facts: ANS crude is being transported from an onshore facility in Puerto Armuelles, Republic of Panama, to a point approximately 90 miles off the United States coast in the Gulf of Mexico by U.S.-registered VLCC's. The ANS crude then is lightered to U.S. ports by U.S.-registered lightering vessels.

Law and analysis: Vessels transporting to the United States crude laded in Panama are required to report arrival and enter at their port of destination as required by title 19, United States Code, sections 1433 and 1434. Reporting arrival and merely presenting a manifest, as stated in your memorandum, does not fulfill the requirements of section 1434.

The general rule is that vessels which are in the coastwise trade are not subject to Customs entry and clearance formalities, as the activity takes place entirely within the United States, its territories, or possessions. However, the transportation of crude from Alaska to the Gulf or Atlantic coast of the United States is an exceptional case; i.e., the crude of necessity must be transshipped via a foreign facility in order to be transported through the Panama Canal, and its arrival on the Gulf or Atlantic coast must be verified for the Department of Commerce. In addition, Customs must be satisfied that the crude originated in Alaska. With respect to lightering vessels, Customs and Department of Commerce requirements can be complied with most readily by reporting arrival and presenting a manifest.

We note that the specific question posed by this inquiry is not addressed in Manual Supplement 3250–02, June 24, 1980, "Customs Control of Petroleum Product Importations," the subject of Policy Statement 3200–04 of the same date.

Holding: Lightering vessels which take on ANS crude on the high seas from United States-flag vessels which transported the crude from onshore storage facilities in the Republic of Panama are required

to report arrival and produce manifests at each port of discharge—the port of first arrival and subsequent ports. This must be accomplished within 24 hours of arrival even though formal entry is not required.

(C.S.D. 81-133)

Classification: Proper Tariff Classification of Animal Feed Wheat Gluten and Wheat Gluten for Human Consumption

Date: November 26, 1980
File: CLA-2:RRUCGC
065548 JH

Hon. WARREN G. MAGNUSON,
Chairman, Committee on Appropriations,
U.S. Senate, Washington, D.C.

DEAR MR. CHAIRMAN: With your letter of October 30, 1980, you submitted an additional statement from (name of corporation) a domestic producer of a wheat gluten, concerning the problems created by the new tariff item 184.58, Tariff Schedules of the United States (TSUS), wheat gluten to be used as animal feed. While the current rate of duty on this item is 9.3 percent ad valorem, unlike the regular wheat gluten provision, the rate for which is only reduced by 2 percent over the next 6 years, the animal wheat gluten item is subject to staged-rate reductions which will eventually reduce the rate to 4 percent. Since there is no difference in the wheat gluten used for animal feed and that used for human food (name) fears importers will use the animal feed provision, regardless of the product's intended use, in order to obtain the lower duty rate.

As we explained to you in our letter of September 29, 1980, Customs has no authority to require that animal feed wheat gluten be decharacterized or that importers entering the gluten under item 184.58 prove within 1 year that the product was, in fact, used in animal feed. Under the law, the importer has 3 years after entry of an article to prove that it was used as claimed at importation. However, we will act on your suggestion to alert Customs officials at the various ports to the problems involved.

It is noted that since the administrative remedies are regarded by (name) to be somewhat limited in what they can accomplish, perhaps the most effective means for solving the problem would be to qualify the provision in question by legislative means.

If we can be of any further assistance in this matter, please do not hesitate to call on us.

(C.S.D. 81-134)

Classification: CXL-2000, A Chemical Product From England

Date: December 1, 1980
File: CLA-2:RRUCGC
061049 JH

Re Decision on Application for Further Review of Protest No. 1001-8-012193. This decision concerns Protest No. 1001-8-012193 filed on October 3, 1978, regarding CXL-2000, a chemical product from England.

AREA DIRECTOR OF CUSTOMS,
New York Seaport,
New York, New York

Facts: The merchandise at issue, a chemical product from England, is called CXL-2000. It consists of a synthetic rubber (fluoroelastomer), a non-benzenoid synthetic plastics material (polytetrafluoroethylene or PTFE), carbon black and litharge in non-benzenoid organic solvents. The product is used as a protective coating for chimney liners and the flue ducts.

The Customs Service classified the merchandise as a mixture in item 432.00, Tariff Schedules of the United States (TSUS), with the rate for the PTFE component in item 445.50, TSUS.

The protestant contents that the merchandise is a synthetic rubber classifiable in item 446.15, TSUS.

Issue: The tariff classification of CXL-2000.

Law and analysis: Schedule 4, Part 4, Subpart B, Headnote 2, TSUS, defines the term "rubber":

> The term *"rubber"* means a substance, whether natural or synthetic, in bale, crumb, powder latex or other crude form, which can be vulcanized or otherwise cross-linked, and which after cross-linking can be stretched at 68 degrees F. to at least 3 times its original length and which, after having been stretched to twice its original length and stress removed, returns within 5 minutes to less than 150 percent of its original length, and includes such substance whether or not containing fillers, extenders, pigments, or rubber-processing chemicals.

Headnote 2, Part 9C, Schedule 4, TSUS, defines "paints and enamel paints" as dispersions of pigments or pigment-like materials with a liquid (vehicle) which are suitable for application to surfaces as a thin layer, and which dry (harden) to an opaque, solid film. The vehicle of paints consists of drying oils or resins which bind the pigment particles together in the film. Paints and enamel paints may also contain thinners driers, plasticizers, or other agents.

The product in this case is described as a fluoroelastomer composi-

tion that is used to coat chimney liners and flue ducts to provide protection against corrosive gases and fly ash abrasion. CXL–2000 is not a crude synthetic rubber, but rather a finished product ready for final application. It is a mixture of synthetic rubber, a non-benzenoid synthetic plastics material (PTFE), carbon black, and litharge in a non-benzenoid organic solvent. CXL–2000 is mixed with a vulcanizing agent immediately before use and is applied by spraying to form a corrosion resistant coating for industrial chimneys.

Holding. The subject merchandise, having undergone various manufacturing processes, is a finished product with a dedicated use, and this dedicated use is as a paint. CXL–2000 is classifiable under the provision for paints not containing titanium pigments in item 474.30, TSUS, dutiable at 3.9 percent ad valorem.

(C.S.D. 81–135)

Subject: Licensing: U.S. Customs Service Employees Taking the Qualifying Examination for Customhouse Broker's License

Date: December 1, 1980
File: BRO–3–02 RRUEE
713404 JB

This ruling concerns U.S. Customs Service employees taking the examination qualifying persons for an individual customhouse broker's license.

Issue: What is the period of time successful completion of the customhouse broker's examination remains valid for U.S. Customs Service employees who do not terminate their employment or retire?

Law and analysis: An officer or employee of the United States may not be licensed as a customhouse broker (19 CFR 111.11 (a)(1)). While employees of the U.S. Customs Service may take and successfully pass the customhouse broker's examination, a customhouse broker's license will not be granted to a Customs employee passing the examination until his service with the United States is terminated. If an inordinate period of time intervenes between the passing of the examination and the date on which the employee terminates his employment with the government, there is legitimate concern that he or she will not remain fully conversant with tariff laws, Customs Regulations, and procedures not within his area of specialization. However, in our view, a Customs employee who passes the broker's examination and continues to work for Customs should remain sufficiently familiar with customs laws, other agency laws which Customs assists in enforcing, and procedures so as to justfy considering a grade on the examination to be valid for at least 5 years.

347-181 O - 81 - 7

It should be noted, however, that an individual outside the Customs Service who achieves a passing grade on the examination, but subsequently refuses to cooperate with Customs when it investigates the applicant to verify his or her qualifications, may have his or her application denied on that basis. The individual would then have to file a new application and take the examination again if he or she later decided he or she did wish to obtain a customhouse broker's license (BRO 3–02, RRUEE, dated April 22, 1980, 712498).

Finally, it is noted, anyone considering a move from government employment to the private sector should be aware of the restrictions contained in 18 U.S.C. 207 as amended by the Ethics in Government Act of 1978. A former Customs employee who intends to handle customs business in the future should be cognizant of these limitations. For most employees this would require that he avoid post-employment involvement in matters he "personally and substantially" participated in or in matters under his former "official responsibility," although "Senior Employees" are restricted to a greater extent.

Holding: An employee of the U.S. Customs Service may apply for a customhouse broker's license and take the qualifying customhouse brokers' examination. An employee successfully passing the examination does not qualify for a broker's license until employment by the U.S. Government is terminated. If 5 or more years elapse between the date a Customs employee is notified he passed the examination and the date he terminates his employment, his license application will be considered as withdrawn and he will be required to apply for a broker's license and successfully complete another brokers' examination before being licensed.

(C.S.D. 81–136)

Vessel Repair: Petition for Relief From Payment of Vessel Repair Duties

Date: December 4, 1980
File: VES–13–18 RRUCDC
104790 JL

This ruling concerns a petition for relief from payment of vessel repair duties filed under section 4.14(k), Customs Regulations.

Issue: Was the labor necessary to make repairs on the vessel performed by a "resident of the United States" within the meaning of 19 U.S.C. 1466(d)(2), so as to qualify for remission of duties?

Facts: In December 1979, the American-flag vessel (vessel name) had repairs performed to it in Singapore. The agent for the vessel owner claims that certain of the costs invoiced to the vessel are not

dutiable because those items cover the time and expenses of a field engineer who is a U.S. citizen.

Law and analysis: Section 466, Tariff Act of 1930, as amended (19 U.S.C. 1466(d)(2)), allows remission of duties for necessary repairs on American-flag vessels—if the owner or master of such vessel furnishes good and sufficient evidence that—

> (2) such equipment or parts thereof or repair parts or materials, were manufactured or produced in the United States, and the labor necessary to install such equipments or to make such repairs was performed by residents of the United States, or by members of the regular crew of such vessel; . . . .

An analysis of the field report supplied with the petition discloses that the field engineer in question went aboard the vessel to investigate a problem with the 1000 KW General Electric turbo set. The problem was found to have been caused by dirt, rust and steel chips which found their way into the trip throttle valve operating cylinder. Except for a small basket screen which was installed in the system before it was refitted, it does not appear that any parts were utilized in the repair of the vessel.

The word "resident" has many meanings in law, largely determined by the statutory context in which it is used. *Kelm* v. *Carlson*, 473 F. 2d 1267, 1271 (1973). The text of present section 466(d)(2) was added to section 3115 of the Revised Statutes when section 466 of the Tariff Act of 1930 was enacted and remains unchanged. The legislative history reveals that the amendment was made to accommodate companies which sent their workers and materials to nearby ports in Canada to repair American-flag vessels berthed there. The workers returned to their residences in the United States at the end of each work day. They worked only on American-flag vessels.

We take notice of the fact that American personnel are frequently flown to foreign locations to perform repairs on specific American-flag vessels. Within the context of section 466, which has as its purpose the protection of American shipyards and labor, such persons are "residents of the United States" within the meaning of section 466(d)(2), provided they are assigned work on a specific American-flag vessel and return to the United States upon completion of their work on that vessel.

However, the field engineer in this case was attached to the foreign repair facility to augment its staff prior to the arrival of the (vessel name). He was available to work on any vessel putting into Singapore for repairs. For this reason, and upon consideration of the legislative history of the pertinent statute, in our opinion the repairs were not performed by a "resident of the United States", as that term is used in section 466(d)(2).

Holding: Labor expended by an American field engineer assigned to a foreign repair facility temporarily to augment its staff during a peak work period is not performed by a "resident of the United States" within the meaning of 19 U.S.C. 1466(d)(2) so as to qualify for remission of duties thereunder.

Effect on other rulings: None.

(C.S.D. 81-137)

Vessel Repairs: Petition for Remission of Duties Assessed on the Cost of Temporary Repairs to an American Vessel

Date: December 4, 1980
File: VES 13-18-RRUCDC
104940 JM

This ruling concerns a petition filed pursuant to section 4.14(k), Customs Regulations, for remission of duties assessed on the cost of repairs to an American vessel.

Issue: 1. Is the cost of temporary repairs subject to duty under 19 U.S.C. 1466?

2. Is the cost of an inspection dutiable when temporary repairs are effected as a result thereof?

3. Are labor charges for the time workmen are awaiting arrival of a vessel dutiable?

Facts: The subject vessel was inspected by divers outside the breakwater at Colon, Republic of Panama, on June 23, 1980. This inspection showed that the propeller was loose about 2½″ from its original position. On June 24, 1980, divers were available at 0600 hours awaiting the vessel which arrived in the bay at approximately 1300 hours. Further inspection revealed that the tail shaft nut was loose about 3″ from the propeller boss and the safety lock was broken. The divers removed the broken safety lock, found the nut and the thread on the shaft in good condition, pushed the propeller into place, tightened the nut, and fabricated and installed two safety locks. After the repairs were tested, a fair water cap was installed but it was not filled with grease and the bolt heads were not cemented because the cap would be removed for inspection after the cargo was unladen.

After the Regional Commissioner denied an application for relief from duty on the cost of repairs, a petition was filed requesting relief from the labor charges attributable to the inspection and to the time workmen were awaiting arrival of the vessel. The petitioner believes that the charges for the time spent by divers inspecting the damage and awaiting the arrival of the vessel at the repair berth are non-

dutiable because they are not part of the actual repairs and because the repairs accomplished in the foreign country were temporary in nature.

Law and analysis: In CIE 1156/62, dated October 24, 1962, we held that repairs made as a temporary expediency are subject to duty under the vessel repair statute.

In CIE 429/61, dated April 28, 1961, we held that testing which is effected for the purpose of ascertaining whether repairs to certain machinery or parts on the vessel are required, or is performed in order to ascertain if the work is adequately completed, is also an integral part of the repairs and is dutiable. Since the inspection in the subject case was made to determine if repairs were required, the cost of inspection is considered dutiable as a part of the temporary repairs.

In CIE 601/67, dated June 28, 1967, we held that the portal to portal pay of repairmen is part of the dutiable cost of repairs. We believe it follows from this decision that charges for the time workmen were awaiting arrival of the vessel similarly are dutiable.

Holding: 1. The cost of repairs made as a temporary expediency is subject to duty under 19 U.S.C. 1466.

2. The cost of the inspection, which was effected for the purpose of determining whether repairs to the vessel were required, is dutiable under 19 U.S.C. 1466 as part of the temporary repairs effected as a result thereof.

3. The labor charges for the time workmen were awaiting arrival of a vessel are considered a part of the cost of the repairs to the vessel. Since the cost of the repairs in the subject case is dutiable under 19 U.S.C. 1466, the labor charges attributable to the waiting period are dutiable.

(C.S.D. 81-138)

Drawback and Refunds: Extension of Time Period for the Return to Customs Custody of Rejected Merchandise

Date: December 9, 1980
File: DRA-1-RRUCDB NK 211348

Issue: Whether the 90 day time period in which rejected merchandise is required to be returned to Customs custody for exportation under 19 U.S.C. 1313(c), may be extended when the delay is due to the refusal of the foreign seller to agree to accept the return of the merchandise.

Facts: Two shipments of merchandise were imported on April 7 and

30, 1977. The importer claims that the first shipment did not conform to specifications and the second was sent without his consent. The importer further claims that the refusal of the foreign seller to agree to the return of the merchandise resulted in the delay in the return of the merchandise to Customs custody for exportation.

While the dispute between the parties was pending in litigation, the importer informed Customs on or about January 17, 1980, that the foreign seller agreed to accept the return of the merchandise. As a practical matter, the importer requested the District Director at the port where the drawback entry will be filed for an extension of the 90 day period in which to return the merchandise to Customs custody for exportation.

Law and analysis: Section 1313(c), title 19, United States Code, in compliance with applicable regulations, provides for a refund of 99 percent of duty paid on imported merchandise upon exportation when:

1. The merchandise does not conform to sample or specifications, or was shipped without the consent of the consignee; and,
2. Within 90 days after the merchandise was released from Customs custody it is returned to Customs custody for exportation.

The law also provides for the granting of an extension in writing for a longer time in which to return the merchandise to Customs custody for exportation.

Section 22.33(a) of the Customs Regulations provides that the District Director at the port where the drawback entry will be filed may, upon written application, extend the period in those cases where he is satisfied that the importer has been or will be prevented by circumstances beyond his control from returning the merchandise within the 90 day period, and that the importer proposes to return, or has returned, the merchandise within a reasonable time.

If the District Director is satisfied that the refusal of the foreign seller to agree to accept the return of rejected merchandise caused the delay of the importer in returning the merchandise to Customs custody for exportation within the 90 day period, he may grant an extension of time to return the merchandise to Customs custody for exportation. The granting of an extension of time does not imply a waiver of other mandatory requirements of the drawback law and regulations.

Holding: After the expiration of the 90 day time period in which rejected merchandise is required to be returned to Customs custody for exportation, a written request for an extension of the time period may be granted when it is shown that the delay of the return to Customs custody was due to the refusal of the foreign seller to agree to accept the return of the rejected merchandise.

(C.S.D. 81–139)

Vessel: Transshipment of Fish Taken on the High Seas by a Foreign-Flag Fishing Vessel

Date: December 11, 1980
File: VES–7–02 RRUCDC
VES–7–03/7–05
104912 MKT
104779

In response to your letter of October 9 and your telegram of December 3, 1980, we have considered whether a foreign-flag vessel which takes and processes fish on the high seas and transships the fish, or fish products processed therefrom, for direct exportation, in the territorial waters of the United States, including the internal waters of the State of Alaska, would be in violation of section 4311 of the Revised Statutes, as amended by the Nicholson Act (46 U.S.C. 251(a)).

Specifically you ask:

(1) Whether a West German-built and registered factory stern trawler which is harvesting and processing bottomfish in the U.S. fishery conservation zone under an allocation and which transships its processed product and related by-products to a foreign-built, foreign-flag support vessel for direct export (without landing such products on United States soil) while anchored within the three mile territorial limit but outside of any United States port violates 46 U.S.C. 251(a);

(2) If the proposed transshipment of product within the three mile limit is a violation of 46 U.S.C. 251(a), whether it is a substantive violation or merely a technical violation, and what the penalties in each case are; and

(3) If the proposed transaction is not in violation of 46 U.S.C. 251(a), whether the provisions of 46 U.S.C. 291 or 19 C.F.R. Part 18 or the entry and clearance requirements of Part 4 are applicable thereto?

(4) Under what circumstances may a transshipment of the type proposed take place within the internal waters of the State of Alaska without violating the Nicholson Act or other Customs laws of the United States?

Your client is the United States agent for a West German fishing company that operates a German-flag fish catching and processing vessel, the (vessel name) in the fishery conservation zone (16 U.S.C. 1811) under a permit issued pursuant to the Fishery Conservation and Management Act (16 U.S.C. 1801 *et seq.*). Attempts to transship the fish products to a Dutch-flag vessel, the (name) at a location outside

the three mile territorial waters, described in 50 CFR 611.90(c)(2), have met with failure due to the severe weather conditions in the area. According to conversations with you, these conditions have resulted in injuries to the crew and damage to the vessel during the transshipment attempts. Your client therefore proposes to transship the fish products while at anchor in Beaver Inlet on the east side of Unalaska Island, Alaska, within the territorial waters of the United States.

Your questions are answered in the order presented.

(1) Section 4311 of the Revised Statutes, codified as the first sentence of 46 U.S.C. 251(a), which antedates the Nicholson Act ("the Act"), codified as the second sentence of section 251(a), reserves the privileges of vessels employed in the American fisheries to properly documented vessels built in the United States and owned by United States citizens. R.S. 4311 has been interpreted, at least since 1943, to prevent a vessel employed in fishing, other than vessel of the United States, or a vessel of less than five net tons owned in the United States, from coming into a port *or place* in the United States except to secure supplies, equipment, or repairs or if in distress (19 CFR 4.96(b), in effect since 1943; *see* T.D. 52880). In addition, R.S. 4311 has been interpreted, at least since 1924, to prohibit the transshipment of fish taken on the high seas by a foreign-flag fishing vessel to another vessel within the three mile limit.

The purpose of the Act, which became effective in 1950, is to strengthen R.S. 4311 by prohibiting foreign-flag fishing vessels from proceeding to a foreign port, there exchanging their document for that of a cargo vessel, and then proceeding to the United States to market their catch taken on the high seas. There is nothing in the legislative history of the Act to reflect an intention by the Congress to limit R.S. 4311 as interpreted by the Customs Service or its predecessor agency, the Department of Commerce, by restricting its application to an area which does not encompass the territorial waters of the United States or by adding to the purposes for which a foreign-flag fishing vessel may enter U.S. territorial waters.

By its terms, the Act prohibits a foreign-flag vessel from landing in a port of the United States fish or fish products processed therefrom taken or received on the high seas. Since 1974, the Customs Service has interpreted the Act to prohibit any foreign-flag vessel from transshipping fish taken or received on the high seas, or fish products processed therefrom, whether or not for export, to another vessel within United States territorial waters.

We rely on the definition of "port" in section 101.1(l), Customs Regulations, which was in effect in substance prior to the passage of the Nicholson Act (*see* section 1.1, Customs Regulations of 1943) in support of our interpretation of its geographic scope as including

territorial waters. Section 101.1(l) defines "port" to include a Customs district. In Alaska, the district, Number 31, comprehends the territory of the State of Alaska (section 101.3(b), Customs Regulations). The State of Alaska includes its territorial waters (48 U.S.C. ch. 2).

"Territorial waters", as defined by the Coast Guard in 33 CFR 2.05–25, are composed of the three mile territorial sea, the internal waters of the United States that are subject to tidal influence and those internal waters that are not subject to tidal influence but are or have been used, or are or have been susceptible for use, by themselves or in connection with other waters, as highways for substantial interstate or foreign commerce. This definition is consistent with the statutory definition of "port", for importation purposes, 19 U.S.C. 232, the predecessor to which, section 2767 of the Revised Statutes, has been in effect since 1873–1874. Section 232 defines "port" to include any *place* from which merchandise can be shipped for importation. (*See Petrel Guano Co.* v. *Jarnette*, 25 F. 675, 677 (C.C. E.D.N.C. 1885)).

That a "transshipment" is a "landing", an activity within the meaning of the Act, was established in a Customs Service decision abstracted as T.D. 68–206(2). That decision also established that the Act applies whether or not fish or fish products otherwise subject to the Act are transshipped for export. Both of these prohibitions are based on the rationale that the proscription of the Act is not limited by its terms to an unlading of fish or fish products for any particular purpose or purposes. To hold otherwise would permit foreign-flag catching vessels to enter a U.S. port or place for transshipment or unlading for export, purposes not permitted by R.S. 4311 and 19 CFR 4.96(b). This result, which would diminish the privileges of the American fisheries reserved to certain U.S. vessels, clearly is not intended by the Act, the purpose of which is to strengthen, rather than weaken, the already existing constraints on the use of foreign vessels in the American fisheries. We find further support for our conclusion in the decision that a "transshipment" is a "landing", in the context of a statute relating to the importation of merchandise, reached by the court in *The Fame*, 8 F.Cas. 982, 984 (D.Mich. 1858) (No. 4,633).

In addition to any prohibition against this activity in the laws and regulations administered by the Customs Service, the National Oceanic and Atmospheric Administration (NOAA) has informed us by letter, dated November 28, 1980 (a copy of which we understand has been furnished to you by that agency), that the Fishery Conservation and Management Act prohibits a foreign-flag vessel from transshipping fish taken on the high sea in the fishery conservations zone, under a permit, to another vessel in Beaver Inlet, Alaska, or elsewhere in the territorial seas of the United States. NOAA's

347-181 O - 81 - 8

letter also states that adverse weather conditions said to prevail in suitable prospective transshipment areas on the high seas, so as to endanger the vessels, their crew, or cargo, would not affect its position.

(2) We believe any violation of the Nicholson Act to be substantive, not technical. Any violation would subject the vessels involved to the penalty of seizure and forfeiture (18 U.S.C. 545; and 19 U.S.C. 1595a (a)). Fish or fish products landed in violation of the Act would be subject to forfeiture (18 U.S.C. 545). Every person who assists in the violation would be subject to a penalty equal to the value of the fish or fish products landed (19 U.S.C. 1595a(b)). Penalties incurred for a violation of the Fishery Conservation and Management Act would be determined by NOAA.

(3) Since we consider the proposed activity to be in violation of 46 U.S.C. 251(a), we find your third question to be moot. We make no decision concerning whether 46 U.S.C. 91, 19 CFR Part 18, or the entry and clearance requirements of Part 4 would be applicable to the activity.

(4) Your telegram appears to concede that the proposed activity is prohibited by the Fishery Conservation and Management Act but suggests that the NOAA decision does not prohibit the transshipment you propose in the internal waters of Alaska shoreward of the baseline of the territorial sea. You also advise us that the State of Alaska is prepared to create a "constructive port" for such purposes if this will help avoid the Nicholson Act.

Under the definition of United States "territorial waters" established by the Coast Guard and noted above, a point in the internal waters of the State of Alaska susceptible for use by itself or in connection with other waters as a highway for substantial interstate or foreign commerce would be in "territorial waters." Thus we rule that a foreign-flag vessel may not land fish caught or received on the high seas in internal state waters for the reasons discussed above. If this construction were not applied, Customs "port of entry," inside the baseline of the territorial sea, in internal state waters, would be outside the jurisdiction of the Nicholson Act, clearly a result not intended by the Congress.

In summary, the Customs Service holds that a foreign-flag vessel which takes and processes fish on the high seas in the fishery conservation zone and transships the fish, or fish products processed therefrom, for direct exportation, in the territorial waters of the United States, including the internal waters of a state, would be in violation of R.S. 4311, as amended by the Nicholson Act.

This holding is consistent with previous rulings of the Customs Service and the Department of Commerce, its predecessor agency in the administration of R.S. 4311, which have held, at least since

1924, that the transshipment of the catch of a foreign-flag fishing vessel to another vessel in the territorial waters of the United States is proscribed.

(C.S.D. 81-140)

Entry: Separate Entry for Individual Invoices Involving One Shipment

Date: December 11, 1980
File: ENT-1-01 RRUEE
713416 M

This ruling concerns whether a company may make a separate entry for each invoice when one shipment is involved.

Issue: May a large retail company make a separate entry for each invoice although one shipment is involved?

Facts: Each import shipment of a large retail company is very large involving numerous invoices. This results in this company filing a voluminous entry. Because that company's bookkeeping and inventory systems are set up on an individual invoice basis, it wishes to enter individual invoices on separate entries even though the merchandise has arrived on the same vessel and has been received on one bill of lading. That company notes that the consolidation of invoices on a one entry per shipment basis creates problems in tracking and controlling.

The District Director of Customs at the port involved notes that section 141.51 of the Customs Regulations sets forth the general requirement of one entry per shipment. However, he requests that for this company, Headquarters should approve pursuant to section 141.52(i) a waiver of this requirement. He points out that allowing individual entries for each invoice will not prejudice the revenue and will allow for the efficient control of Customs business. The district director notes that single-line entries will be more readily assigned to the proper commodity specialist team and will provide a clear audit trail for Customs as well as the importer.

Law and analysis: Section 141.51 of the Customs Regulations provides that all merchandise arriving on one vessel or vehicle and consigned to one consignee shall be included in one entry, except as provided in section 141.52. Paragraphs (a) through (h) of section 141.52, Customs Regulations, set forth certain exceptions from this requirement which do not apply to this case.

Paragraph (i) of section 141.52 provides that a special exception to the requirement of section 141.51 may be granted upon approval of Customs Headquarters.

Because granting the exception requested will benefit both Customs and the importer, the requested waiver is granted. No other request of this nature has been brought to our attention. We believe that this matter is not one of general concern and for that reason have decided not to amend section 141.52, Customs Regulations, to specifically provide for this exception.

If there are any other companies, such as the one involved, which would prefer to make a separate entry for each invoice, those companies should contact the district director of Customs at the port where they enter their merchandise. If the district director believes that similar benefits will accrue to the importer and Customs by permitting this exception, he may on the basis of this ruling permit that company to make a separate entry for each invoice.

Holding: Customs Headquarters approves the requested exception to the general rule of one entry per shipment and therefore, the large retail company involved may make a separate entry for each invoice although one shipment is involved.

(C.S.D. 81-141)

Drawback: Undershipment of Ordered Quantity of Merchandise Shipped Without Importer's Consent Thus Entitling Importer to Relief Under 19 U.S.C. 1313(c)

Date: December 12, 1980
File: DRA-1-RRUCDB B
212418

Issue: Whether an undershipment of acrylic woven fabric qualifies under section 1313(c) as having been "shipped without the consent of the consignee" when the supplier is unable to deliver the ordered quantity of fabric to the importer, or constitutes failure to meet an implied specification of the purchase order, also covered by section 1313(c).

Facts: An American seller of fabrics, pursuant to a contract ordered a quantity of acrylic woven fabric from a foreign seller owning a mill based in Holland. The fabric was to be shipped over a 2-year period. The U.S. firm received the first shipment of the fabric and began to produce sample books of the fabric as is the practice in the industry in order to demonstrate the foreign fabric to its customers.

Subsequently, the foreign seller was unable to fulfill the contract because of its inability to obtain labor and yarn, and advised the U.S. firm it was shutting down that particular mill. The foreign seller agreed to refund the money paid for the fabric and the U.S. firm agreed to return all fabric which had not been made up into sample

books. It is the duty on this returned fabric which the U.S. firm seeks to recover as drawback under section 1313(c).

Law and analysis: Section 1313(c) provides:

> Upon exportation of merchandise not conforming to sample or specifications or *shipped without the consent of the consignee* upon which the duties have been paid and which have been entered or withdrawn for consumption and, within ninety days after release from Customs custody, unless the Secretary authorizes in writing a longer time, returned to Customs custody for exportation, the full amount of the duties paid upon such merchandise shall be refunded as drawback, less 1 per centum of such duties. (Emphasis added.)

Assuming compliance with the other requirements of 1313(c), an applicant may receive relief under the "shipped without consent of the consignee" provision when the supplier has overshipped merchandise in contravention of an ordered quantity.

This being the case, it would seem that an undershipment of merchandise in contravention of an ordered quantity would qualify the applicant for drawback. The analogy is rational because in both cases, the applicant wants a prescribed number of items and a change in the number may restrict the applicant's use of the merchandise which is received. It is reasonable to assume should a company order a certain number of items, with the first number of items delivered to be used as samples, that the company would refuse the first shipment if it knew no other shipments would be made.

Therefore, in the case at hand the U.S. firm contracted for "orders" of acrylic woven fabric as evidenced by an order form dated November 3, 1979. The foreign seller informed the U.S. firm by letter on April 2, 1980 that they would accept reshipment of the fabric pieces not made into books because they could not fulfill the contract. The trade custom of this fabric industry requires that a line of fabric which a buyer seeks to purchase must continue to be produced for an average of two years so that the seller may not discontinue the line of fabric.

The cited law refers to "merchandise not conforming to . . . specification". In this case, the goods received technically met the physical properties specified by the U.S. firm. However, one criterion specified for the fabric was the specification of quantity. When applying this specification to the fabric, it is clear the fabric shipped did not meet it.

Holding: The U.S. firm is entitled to relief under 1313(c) because the undershipment of acrylic woven yarn was shipped without its consent, and the shipment received did not meet the specification of quantity.

(C.S.D. 81–142)

Drawback: Applicability of Drawback for Merchandise Used in an Assembly Operation To Manufacture an Article Under Drawback Conditions

Date: December 19, 1980
File: DRA-1-RRUCDB
211997 NK

Issue: Whether drawback is applicable when designated merchandise used in an assembly operation to manufacture an article under drawback conditions is subsequently dismantled from the completed article for convenience in shipping for exportation purposes.

Facts: A drawback claimant has an approved contract under section 1313(a), title 19, United States Code, to assemble tractors and other automotive articles for export with the use of imported machinery, engines, subassemblies, and parts. The claimant asks if drawback would be allowed for imported tires under the following set of facts:

1. Imported tires are mounted onto rims which in turn are affixed to a tractor assembled under drawback conditions.
2. The assembled tractor is tested.
3. After testing, the rims and tires are removed from the tractor.
4. The tires and rims are separated.
5. The tires are tied into a bundle and the rims are packed in boxes.
6. The tires and rims are dismantled from the tractor and separated for convenience in shipping.
7. The tractor, together with the bundled tires and packed rims, is shipped and exported as a complete article or as an entirety.

Law and analysis: The United States Customs Court has held that mounting five imported tires and tubes on American made wheels, four of which were affixed to an automobile and the fifth one placed in the trunk of the automobile as a spare, was a manufacture or production for drawback. See 27 Cust. Ct. 88, C.D. 1352 (1951).

In Customs Service Decision (C.S.D.) 79–79, we held that a disassembly and repacking operation did not constitute a manufacture or production for drawback. A copy machine was imported and was completely disassembled. Parts of the machine were repackaged, and exported as a kit. In C.S.D. 79–79, the only claimed manufacture or production consisted of a disassembly operation and differs from the facts under consideration.

In the case under consideration, the imported merchandise, con-

sisting of tires, was used in an assembly operation in a manner similar to the operations discussed in C.D. 1352, which the Court held was a manufacture or production for drawback. The subsequent dismantling of the tires and rims was for convenience in shipping the tractor with the tires and rims as an entirety for exportation.

The claimant's drawback contract should incorporate fully the operation described and should be supported by proper record keeping.

Holding: Drawback is applicable for designated merchandise which is used in an assembly operation to manufacture an article under drawback conditions and the designated merchandise is subsequently disassembled from the completed article for convenience in shipping the units as an entirety.

(C.S.D. 81-143)

Drawback: Eligibility for Refund of Duty as Drawback on Cargo Containers Manufactured in the U.S. Wholly or Partly of Foreign Components

Date: December 23, 1980
File: DRA-1-09-CO:R:CD:D
212375 B

Issue: Whether cargo containers manufactured in the United States wholly or partly with the use of imported merchandise, departing the country in international traffic after having been sold to foreign entities, are considered exported for purposes of the manufacturing drawback law.

Facts: A United States corporation has manufactured 40′ and 20′ steel dry cargo containers used to carry merchandise in international commerce. These containers are built to specifications and are considered instruments of international traffic. Certain imported components are incorporated in these containers. After construction the containers are sold to two foreign corporations affiliated with the U.S. manufacturer. The purchase contracts between the manufacturer and its respective buyers require the purchasers to export the containers by causing them to depart the United States in international traffic. The containers are then leased by the buyers to ocean carriers for use exclusively in the international transport of merchandise. The lease agreements prohibit the lessee carriers from using the containers in domestic commerce in the United States.

Should the issue raised be answered in the affirmative, the U.S. manufacturer intends to file for an approved drawback contract and and submit claims for drawback.

Law and analysis: Legal Determination 80-0152, June 4, 1980, held that aircraft manufactured in the United States under drawback

conditions, departing the United States in international traffic under a *foreign registry*, are exported for purposes of the drawback law (emphasis added). This decision was based on Treasury Decision 78-288 of July 31, 1978, holding that foreign-owned and based aircraft, imported under temporary importation bond for repairs and modification, were exported for purposes of the temporary importation bond provisions when departing in international traffic. As stated in that ruling, "(W)e do not look to see where it (the aircraft) is parked but rather to the flag it flies and the registration it carries." In the instant case, we are dealing with articles which carry no flag, so resolution of the issue depends upon the ownership of the articles at the time they leave this country. The request for ruling states that the purchasers are "affiliated" with the manufacturer. According to information supplied verbally by counsel for the U.S. manufacturer, that corporation as well as the two foreign purchaser/corporations are wholly-owned subsidiaries of a parent corporation located in New York City. Each corporation is a separate entity, having its own board of directors and stockholders although it is possible some stockholders hold shares in each. The two foreign corporations were chartered in 1969 and 1973/74, some time prior to the initiation of the container manufacturing operations, which began in 1976. Terms of sale are negotiated arms' length with payment in cash, the foreign corporations obtaining independent bank financing when necessary. Based on this information, it appears that ownership of the containers rests with the foreign purchasers at the time the containers exit the United States in international traffic.

Holding: Cargo containers manufactured in the United States partly or wholly with foreign components are eligible for refunds of duty as drawback when such containers are manufactured under drawback regulations and exit the United States in international traffic under foreign ownership. Previous rulings to the contrary are hereby overruled accordingly.

(C.S.D. 81-144)

Classification: Description of Evidence Needed To Support Claim of Defective Merchandise

Date: December 23, 1980
File: CLA-2:RRUCV
542259 MK

To: District Director of Customs, Seattle, Washington.
From: Director, Classification and Value Division.

Subject: Substantiation of quality deficiency: internal advice No. 165/80.

This refers to your memorandum of August 22, 1980, received from the C.I.E. in New York on November 4. You advise that an importer's attorney has requested internal advice as to the evidence necessary to substantiate quality deficiencies in imported merchandise and the appropriate allowances in duties.

The merchandise, men's shirts, was entered as being of first quality at invoiced unit values, and liquidated as entered. Subsequent to liquidation, the importer informed the appropriate import specialist that the merchandise was defective and requested reliquidation at lower values. The importer was unable to supply the evidence you requested to support his claim, and stated that he neither received a credit from the manufacturer nor requested an allowance for substandard merchandise because of the length of time before the defects were noticed.

The importer's attorney contends that a price adjustment by the foreign seller is not a prerequisite to a reduced appraisement, citing CIE 132/62, and that defective merchandise cannot be appraised at the price of first quality merchandise. He suggests, since there is no renegotiated price to approximate export value, that we adopt an approximation of United States value by use of all reasonable ways and means, and he presents detailed calculations by which he arrives at an alleged approximation of United States value.

We agree, of course, with court decisions and Headquarters rulings holding that first quality and defective merchandise should be appraised differently. There are also a number of Headquarters rulings holding that when merchandise is found to be defective after liquidation, Customs officers are authorized to reliquidate the entry under section 520(c)(1), Tariff Act of 1930, as amended, if the mistake of fact as to the nature of the merchandise is timely called to our attention, and if the defect is manifest from the record, or if the importer can establish by documentary evidence satisfactory to Customs that there was a mistake of fact within the meaning of the statute.

In the case of *Hoenig Plywood Corp. et al* v. *United States*, A.R.D. 91 (1958), the merchandise as imported was defective and not of the quality ordered. A settlement was negotiated between the importer and the manufacturer, resulting in a substantial reduction from invoiced prices. The court refused to accept invoice prices, standing alone, as evidence of statutory value and found prices renegotiated after shipment of even less evidentiary proof of value. Inasmuch as plaintiffs failed to establish the price at which the inferior merchandise

347-181 O - 81 - 9

was "freely offered. . ." the presumption of correctness of the appraiser's return of value was not overcome.

C.I.E. 132/62 ruled that, contrary to the court decision appraising officers could, under the authority of section 500 of the tariff act, consider evidence of a renegotiated price as one of the acceptable proofs of the dutiable value of merchandise found to be defective after entry, because Customs officers are not bound by the burden of proof standards which apply in court proceedings.

The ruling also discussed what evidentiary material would be acceptable to support the validity of the negotiated price. We do not construe that ruling as permitting alternative means of establishing the dutiable value of defective merchandise.

In the case you submitted, we conclude that the test records are evidence that some of the merchandise was defective. We agree with the Chief, Duty Assessment Branch VII/VIII, New York Seaport Area, that the attorney's suggested method of arriving at the dutiable value of the merchandise is unacceptable, for the following reasons, which we summarize. The sales evidence shows that 60 percent of the merchandise was sold at the original wholesale price and there is no indication that the retailers sought return of the merchandise although the attorney's letter of January 3, 1979, to Customs at J.F.K. Airport claims that those garments were also defective. The sales at reduced prices appear to be voluntary and related solely to the importer's concern about possible adverse effects to its image, but no evidence of adverse comments is presented.

The file indicates that 62 percent of the claimed defective merchandise was sold via intercompany transfer to related factory outlet stores. If those stores operate on a typical retail markup of 100 percent of cost, the importer's parent is receiving the full wholesale price. The sales to the lower end retail outlets and bargain basement stores should not form the basis for a reasonable arms length transaction, since the company has not submitted evidence to show that these were outside the importer's normal course of business.

An adjustment for repair costs could be made if the necessity for such costs is verified by submission of data on merchandise returned by the importer's customers, if the importer submits evidence of actual repair costs necessary to place the merchandise in saleable condition.

Any adjustment to the dutiable value should be made under section 500 of the tariff act (for importations antedating the Trade Agreements Act of 1979), and should conform to the applicable basis of appraisement.

In conclusion, when the exporter does not grant a price reduction, we believe the following should be required:

1. A copy of the original orders and confirmations, including specifications and/or approval samples.
2. Correspondence from the importer's customers detailing reasons for their rejection of the merchandise, or cancellation letters or documentary evidence of the importer's price adjustment for inferior merchandise.
3. Copies of invoices to third parties showing prices for first and second quality merchandise.
4. Evidence substantiating that the specifications were not met, and evidence that the supplier was capable of meeting the claimed specifications.
5. Corollary evidence regarding the "usual" sales experience for similar first quality merchandise.

(C.S.D. 81–145)

Classification: Mixture of Propane-Butane

Date: December 24, 1980
File: CLA-2 CO:R:CV:G
065816 JH

To: District Director of Customs, Houston, Texas.

From: Donald W. Lewis, Assistant Commissioner, Regulations and Rulings.

Subject: Internal advice (unnumbered) on the classification of a mixture of propane-butane.

The mixture is obtained by the following method. A stream of hydrocarbons from an oil/gas well is passed through a separator which separates the hydrocarbons into liquid petroleum and C–1 to C–9 gaseous hydrocarbons. This natural gas stream is then passed through a cryogenic (low temperature) unit which strips away the methane, ethane, leaving the C–3 to the C–9 hydrocarbons. This stream then passes to a fractionator, which separates the C–5 to C–9 fractions (also called "natural gasoline") from the propane-butane stream. The propane-butane stream is then pumped directly into a pressurized vessel for exportation to the United States.

A typical composition of the subject product, in percent by weight, is given as: ethane 0.47 percent, propane 54.82 percent, isobutane 13.10 percent, normal butane 26.90 percent, isopentane 3.27 percent, and normal pentane 1.44 percent.

It is contended that the product is precluded from classification in item 475.15, TSUS, as a mixture of propane and butane because of the high percentages of isopentane and normal pentanes which run from 2 to 7 percent. It is felt that this position is justified by the ASTM standards which permit a maximum percentage of 2 percent pentanes and other hydrocarbons by volume in a mixture of propane and butane.

Since the mixture contains over 50 percent of a single hydrocarbon by weight, it is not classifiable as a mixture of hydrocarbons, in other than liquid form, in item 475.70, TSUS. The question is then whether the product is classifiable as a mixture of propane and butane in item 475.15 TSUS, or a mixture not specially provided for in whole or in part of hydrocarbons derived in whole or in part from petroleum, shale oil, or natural gas in item 432.10.

Item 475.15 not only covers natural gas but also methane, ethane, propane, and butane and mixtures thereof. The Tariff Study (C.I.E. 1/64) points out that the methane, ethane, propane and butane are not considered liquid derivatives of petroleum but are included with natural gas, following C.D. 2112. That case recognized that a propane/butane mixture may be obtained in association with natural gas. In fact, item 475.1545 is the statistical breakout for mixtures containing more than 90 liquid volume percent of propane and butane. While such statistical breakouts may not be legally binding, they often do reflect technical and commercial definitions, and it is understood that this is an industry definition. In fact, information obtained from an industry source is to the effect that propane-butane mixtures in issue while perhaps not a good mixture for "Liquified Petroleum Gas," (LPG), it would be considered a commercial mixture of propane-butane and the 2 to 7 percent isopentane and pentane content would not be considered excessive. In this, connection, it was pointed out by a industry source that while the ASTM standard relied on to preclude this mixture from being classified in item 475.15 does represent a standard for LPG, it is not an absolute.

Since the chemical schedule of the Tariff Schedules is couched in technical, chemical terminology, Customs has tradionally sought to interpret the various provisions in the light of industry standards.

Accordingly, since the propane-butane mixture in question is recognized as a commercial mixture of the gases, and the isopentane and pentane content present is not regarded as excessive for a commercial mixture, it is concluded that the mixture of propane-butane as above described is classifiable in item 475.15, TSUS.

(C.S.D. 81-146)

Drawback: Timely Filing of Application for Further Review of Protest; Retention of Records With Respect to Drawback Claims

Date: December 24, 1980
File: DRA- -CO:R:CD:D
211424 NK

Re Requests for further review of protests numbered 1101-9-000081 and 1101-9-000106.

REGIONAL COMMISSIONER OF CUSTOMS,
Baltimore, Maryland.

DEAR SIR: The following is in reply to your request for further review of the above-referenced protests.

Issues: 1. Whether an application for further review of a protest is timely when filed 90 days after the liquidation of the drawback entry.

2. Whether a drawback claimant must retain verifying records for drawback for three years after payment or for three years after the liquidation of the drawback entry.

Facts:

Issue 1—Protest No. 1101-9-000081, covers drawback entry numbered 162346 which was liquidated on February 9, 1979, with a disallowance of drawback. A protest was filed on March 21, 1979, within 90 days after liquidation. However, an application for further review of the protest was filed on May 15, 1979, more than 90 days after liquidation.

Protest No. 1101-9-000106 covers drawback entries numbered 135279, 143234, 143235, and 143236 which were liquidated on March 16, 1979. However, a protest against the disallowance of drawback and an application for further review were filed within 90 days after liquidation.

Issue 2—The drawback payments and liquidations were transacted for all drawback claims covered by the drawback entries referenced-above pursuant to the accelerated payment procedure outlined in section 22.20a of the Customs Regulations. Those transactions were as follows:

Drawback entry No.	Date of payment	Date of liquidation
135279/73	Mar. 22, 1974	Mar. 16, 1979
143235/73	Mar. 24, 1974	Mar. 16, 1979
143236/73	Mar. 24, 1974	Mar. 16, 1979
143234/73	May 10, 1974	Mar. 16, 1979
162346/72	May 29, 1975	Feb. 09, 1979

On November 29, 30, and December 1, 1977, a Customs auditor performed an examination of the books and records of the protestant for verification of the claims for drawback. The auditor found that the protestant did not have the necessary manufacturing records to identify the imported merchandise used in the manufacture of articles covered by the drawback entries. On liquidation of the entries, drawback was disallowed and demand was made upon the protestant to refund the payments made under the accelerated payment procedure.

The protestant claims that it kept adequate records to support its claims in conformity with its contract (rate) and that Customs' delay in verifying the claims 4 to 5 years after the drawback entries were filed was an unreasonable delay. During the period of delay, the records were inadvertently destroyed when a building where the records were stored was razed. Further, the protestant claims that it did not anticipate a lengthy delay by Customs in verifying and liquidating the drawback entries pending the determination by the Customs Court as to the dutiable status of the imported merchandise covered by the import entries designated for drawback.

Law and analysis:

Issue 1—Under section 1514, title 19, United States Code, and applicable regulations, the liquidation of drawback entries allowing or disallowing drawback, with certain exceptions not applicable to the submitted facts, become final and conclusive upon all persons unless a protest is filed with the appropriate Customs officer within ninety days after but not before the notice of liquidation.

Section 1515, title 19, United States Code provides that upon request of the protesting party filed within the time allowed for filing of a protest under section 1514, a protest may be subject to further review by another appropriate Customs officer. Therefore, a request for further review of a protest must be filed within 90 days after liquidation.

Protest No. 1101–9–000081 was timely filed within 90 days after the liquidation of entry numbered 162346. However, the request for further review of the protest was filed more than 90 days after the notice of liquidation and was not timely within the requirement of law.

Comment: Protest No 1101–9–000106 and the request for further review were both filed within 90 days after the notice of liquidation and will be given further review. Because the deciding issue is the same in both protests, the protestant, as a practical matter, will receive further review for protest no. 1101–9–000081.

Issue 2—The protestant's drawback contract (rate) as amended, incorporates by reference a statement subscribed to on January 12, 1954. The statement contains the following promise that the protestant will

> (H)old its factory and records open for examination at all reasonable hours by authorized Government officials, and to keep such records, together with the supporting data from which prepared, for at least three years from the date of payment of any drawback upon articles on which drawback is claimed under any drawback rate or amendment predicated in whole or in any part upon this statement.

This promise is in conformity with section 22.46 which was added to the Customs Regulation on September 21, 1957 (22FR7538, T.D. 54442) and states as follows:

> All records required to be kept by the manufacturer or producer under this part of the regulations with respect to drawback claims, and records kept by others to complement the records of the manufacturer or producer, shall be retained for at least 3 years after payment of such claims.

Section 22.46 of the Customs Regulations which is controlling in deciding the issues in these protests has not been changed or amended although a rulemaking proposal to do so is pending (See 42FR26993). Nor is this requirement in conflict with the accelerated payment procedure.

The accelerated payment procedure was added to the Customs Regulations on December 22, 1972 (37FR28283) without changing section 22.46. The procedure, under certain conditions, permits a drawback claimant to receive payment before the liquidation of the drawback entry. This procedure does not prohibit Customs from auditing the claimant's records within 3 years after payment for verification of the claims. The procedure also provides that after liquidation, any amount found to be due will be paid or a demand for refund of any excess payment will be made. Thus, Customs may withhold liquidation of a drawback entry pending a decision by the Court as to the dutiable status of the imported merchandise covered by the import entries designated for drawback without delaying any necessary verifications within 3 years after payment.

HOLDINGS:

Issue 1—An application for further review of a protest must be filed with the appropriate Customs officer within ninety days after but not before the notice of liquidation of a drawback entry.

Issue 2—All records required to be kept by a manufacturer or

producer with respect to drawback claims, shall be retained for at least 3 years after payment of such claims. A manufacturer is not required to retain such records 3 years after liquidation of a drawback entry.

You may deny in full protest numbered 1101–9–000081 because the drawback claimant failed to retain verifying records within three years after payment of drawback.

You are directed to allow protest numbered 1101–9–000106 because the drawback claimant was not required to retain verifying records beyond three years after payment.

Your file is returned.

(C.S.D. 81–147)

Classification: Battery-Operated Metal Detector

Date: December 30, 1980
File: CLA–2 CO:R:CV:S
055993 SC

DISTRICT DIRECTOR OF CUSTOMS,
U.S. Customs Service,
Terminal Island, San Pedro,
Los Angeles, California.

DEAR SIR: This ruling involves a reexamination of our decision 061615 of February 15, 1980, concerning Protest No. 2704–9–001252, which was filed on behalf of (name) because of the submission of additional information.

Facts: The merchandise in question consists of a battery-operated metal detector. The device buzzes when the search coil comes in close proximity to a metallic object. The buzzing stops as the coil is moved away from the object. Supplemental information indicates that the numbered 60–3003 metal detector provides a variation of sound intensity when the amount or location of the metal is changed. A variation of pulse rate proportional to the intensity is provided, according to the report. It further indicates that when the battery is weak, it is difficult to set the timing controls for a slow pulse rate, and the oscillator cuts out abruptly without slowing down.

The importer indicates that although the detector in question may not have a meter which can be read so that the user can determine exact size and distance, it does provide for a measurement of the amount of metal or its location in two different manners. It does so by providing

for a "variation of sound intensity" and a "variation of pulse rate" proportional to sound intensity.

Issue: Is the metal detector in question classifiable under the provision for electrical sound signalling apparatus in item 685.70, Tariff Schedules of the United States (TSUS), or under the provision for other electrical measuring, checking or analyzing apparatus, in item 712.49, TSUS, rather than under the provision for electrical articles not specially provided for in item 688.40, TSUS, (now 688.45).

Law and analysis: This Headquarters has previously ruled in a letter 054585, dated May 2, 1978, that merchandise similar to the metal detector under consideration was properly classifiable as electrical articles, not specially provided for, in item 688.40, TSUS. While the instant merchandise may depend upon an electrical phenomenon which varies according to the factor to be ascertained, it does not measure, check, analyze, or automatically control within the meaning of item 712.49. As we stated in our letter 061615 of February 15, 1980, citing the *United States* v. *Corning Glass Works*, C.A.D. 1216, while the metal detector might be conceived as an instrument which investigates and makes sure about conditions or circumstances, its function more closely fits the dictionary description of detect, that is, to discover the presence of. Further in cases like the map inspection process, there is a comparision by an operation of visual information with a standard. Metal detection involves no such process.

The device is not classifiable as sound signalling apparatus as claimed. We note that in *Oxford International Corporation* v. *United States*, C.D. 4608, the Customs Court in construing item 685.70, TSUS, concluded that the doctrine of *ejusdem generis* supports the interpretation that item 685.70 encompasses only those devices whose function is to call attention to temporary or abnormal conditions. * * * The Court further stated that in item 685.70, the general phrase "other sound or visual signalling apparatus" is preceded by the following enumeration: "Bells, sirens, indicator panels, burglar and fire alarms." All of the named devices are activated or function in temporary or abnormal situations only. Thus, the general provision "other sound or visual signalling apparatus" must exclude articles which operate continuously, and which do not warn of the existence of emergencies or special circumstances. In our view, the merchandise in question does not meet the judicial requirements of item 685.70.

Accordingly, we must conclude that the metal detector in question, which does not contain a metering device, is properly classifiable under the provision for electrical articles, not specially provided for, in item 688.40, TSUS, (now 688.45) dutiable at the rate of 5.3 percent ad valorem.

(C.S.D. 81-148)

Classification: Whether Silver Articles Created Between 1895 and 1915 Are Properly Classified as Antiques

Date: December 30, 1980
File: CLA-2:RRUCSC
063973 TL

DISTRICT DIRECTOR OF CUSTOMS,
U.S. Customs Service,
Milwaukee, Wisconsin.

DEAR SIR: This ruling responds to your July 18, 1980, request concerning the proper classification of certain silver articles, Internal Advice 137/80, received in this office August 29, 1980.

Issues: 1. Are articles created between 1895 and 1915 properly classified as antiques under item 766.20, Tariff Schedules of the United States, (TSUS).

2. Are these silver household articles considered articles of utility precluded from free entry as works of art by Headnote 1(iv), Subpart A, Part 11, TSUS.

3. Are articles made in the Union of Soviet Socialist Republics before 1918 entitled to the column 1 rates of duty.

Facts: Two articles made by silversmiths who worked for (name) were imported into the United States. According to the submission from the seller of these articles they were made before a communist state was established in the U.S.S.R. One of the articles is an oval-shaped silver-mounted moss agate bonbonniere with silver scrolled feet. The other is a silver-mounted nephrite bellpush. The cavity inside the bonbonniere can be filled with candy. The bellpush was originally used to signal people, possibly servants. Each of the articles was made between 1895 and 1915.

Law and analysis: Item 766.20, TSUS, is a provision for, ". . . antiques made prior to 100 years before their date of entry."

Item 765.25, TSUS is a tariff provision for: "Original works of the free fine arts not provided for in the foregoing provisions. . . ."

It appears that the claim, that these articles are antiques, has been abandoned. In any case, articles made between 1885 and 1915 are not properly classified under item 766.20, TSUS, as they are not 100 years old.

Headnote 1(iv), Subpart A, Part 11, Schedule 7, TSUS, indicates that ". . . articles of utility . . ." are not classified under item 765.25, TSUS.

Webster's New World Dictionary defines bonbonniere as: "a container for bonbons; candy box or dish."

In *Alexander & Oviatt* v. *United States*, T.D. 45639 glass ". . . chande-

liers, a clock, door and window panels . . .", were considered to be articles of utility. In *Dapato Statuary Co.* v. *United States*, T.D. 42840, A marble, mosaic, inlaid floor, in 16 colors was precluded from being a work of art because, as a floor it served a utilitarian function even though it had artistic merit. Similarly, we are of the opinion that notwithstanding the artistic qualities of these two silver articles, they are utilitarian and thus are not properly classified under item 765.25, TSUS. The bonbonniere could be used as a candy dish, the bellpush as a signalling device.

Treasury Decision 52788 indicates that articles which are produced or manufactured in the Union of Soviet Socialist Republics and are exported before July 1, 1917, are entitled to column 1 rates of duty. In an October 2, 1980 submission, it is stated that both of the items have been in private collections outside of the U.S.S.R. for seven decades.

Thus, we are of the opinion that they are properly dutiable at column 1 rates of duty.

(C.S.D. 81–149)

Entry: Prohibited Entry of Certain Sculptures Owing to Copyright Infringement Pursuant to 17 U.S.C. 602

Date: January 2, 1981
File: CPR–3–CO:R:E:E
714065 SO

This ruling concerns whether or not a shipment of mobile and kinetic sculpture invoiced as "Horse Rider S" is considered to be an infringing importation pursuant to section 602 of the Copyright Revision Act of 1976 (17 U.S.C. 602).

Issue: Would the importation from Taiwan of a shipment of mobil kinetic sculptures invoiced as "Horse Rider S" infringe upon the rights of the copyright owner, Otagiri Merchantile Company, Inc., which has recorded their copyright for "Horse" VA–8–950 for kinetic sculpture with Customs for import protection.

Facts: The shipment referred to above arrived in San Francisco, California. Customs notified the importer and the copyright owner pursuant to section 133.43 of the Customs Regulations (19 CFR 133.43) that the shipment was suspected of being an infringing importation. The importer denied that the articles constituted infringing copies. The copyright owner wrote to Customs at San Francisco to demand the exclusion of the detained imported articles and filed the bond required by 19 CFR 133.43(b)(2). Samples of both works were submitted to Customs Headquarters for comparison purposes in reaching our decision.

The attorney for the importer has alleged that copyright protection only obtains to assembled three-dimensional objects. In view of the fact that the imported articles consist of two parts, a balancing wire horse and rider figure which rocks back and forth on a separate pedestal, the attorney asserts that there is no way for Customs to determine the similarity between the copyrighted three-dimensional objects and the unassembled parts imported by his client.

The copyright owner stated that the parties are now before the U.S. District Court for the Northern District of California on the issue of copyright infringement. The importer attempted to have the suit dismissed on the basis that kinetic sculptures are not the proper subject matter for copyright registration but was unsuccessful. The copyright owner asserts that the copyright registration is presumably valid for Customs purposes and that the U.S. Customs Service should confine itself to the issue of whether or not the imported article is substantially similar to the work protected by copyright. A visual comparison of the imported article with the copyrighted work is said to be sufficient to reach a conclusion that copyright infringement exists. If substantial copying exists, the Customs Service is requested to seize and forfeit the merchandise to the government.

Law and analysis: Section 602(a) of the Copyright Law (17 U.S.C. 602(a)) provides, with certain specified exceptions not applicable in this case, that importation into the United States, without authority of the owner of copyright under this title, of copies of a work that has been acquired outside the United States, is an infringement of the copyright. The Secretary of the Treasury is authorized to prescribe regulations for the enforcement of the provisions of this title prohibiting importation.

Section 603(c) of the Copyright Law (17 U.S.C. 603(c)) provides that, "Articles imported in violation of the importation prohibitions of this title are subject to seizure and forfeiture in the same manner as property imported in violation of the Customs revenue laws. Forfeited articles shall be destroyed as directed by the Secretary of the Treasury or the court, as the case may be; however, the articles may be returned to the country of export whenever it is shown to the satisfaction of the Secretary of the Treasury that the importer had no reasonable grounds for believing that his or her acts constituted a violation of law."

The test employed to determine if a design has been copied is whether an ordinary observer who is not attempting to discover disparities between two articles would be disposed to overlook them and regard their aesthetic appeal as the same. The substantial similarity test was developed in order to bar a potential infringer from producing a supposedly new and different work by employing the tactic of

making deliberate, but trivial, variations of specific features of the copyright protected work.

We agree with the copyright owner that in cases such as this, where the validity of a copyright registration has been challenged, in Court or otherwise, Customs should confine itself to making a determination as to whether or not copying exists. However, we are constrained to note that the United States Court of Appeals, Sixth Circuit, held in the case of *Monogram Models, Inc.* v. *Industro Motive Corporation*, 492 F. 2d 1281, 181 USPQ 425 (1974) that plastic scale model airplane kits were proper subject matter for copyright protection and that the copyright was valid as to all components of the kit, including plastic component parts. We also note the decision of the United States District Court, S.D. New York, in the case of *Blazon, Inc.* v. *Deluxe Game Corporation*, 268 F. Supp. 416 156 USPQ 195 (1965) which held that statues or model of animals or dolls are entitled to copyright protection, including a model horse.

In view of the fact that the assembly process referred to by the attorney for the importer amounts to merely placing the horse and rider on the pedestal, we strongly disagree with the assertion of the attorney for the importer that there is no way for Customs to determine the similarity between the copyright protected work and the imported article. Our comparison of the works leaves no doubt that the imported article is substantially similar to the copyright protected work. The minor differences in the placement of the ears of the horse, the curve of the arms of the rider, and the shape of the pedestal appear to us to constitute a deliberate attempt to make minor variations in the design while preserving a similar aesthetic appeal to the ordinary purchaser. Our general impression is that the works appear to be almost identical.

Holding: We are of the opinion that the imported articles invoiced as "Horse Rider S" would be prohibited entry into the United States as infringing on the rights of the copyright owner, Otagiri Merchantile Company, Inc. The merchandise is subject to seizure and forfeiture in accordance with 17 U.S.C. 603. In appropriate cases, the district director may grant relief from forfeiture upon consideration of a petition submitted pursuant to 19 CFR 133.51(a), under conditions specified by him (19 CFR 133.51(b)). However, in cases where the importer satisfies the district director that he had no reasonable grounds for believing that his acts constituted a violation of law, and exportation is suggested as an alternative disposition for the seized merchandise, exportation of the unlawfully imported articles would be limited by 17 U.S.C. 603(c) to returning the articles to the country of export.

(C.S.D. 81–150)

Drawback: Communications Satellites Stored in a Foreign-Trade Zone

Date: January 5, 1981
File: CO:R:CD:D
212092 WR

Issues: 1. Whether an article made in the United States using duty-paid foreign materials may be placed in a foreign-trade zone as privileged-domestic merchandise?

2. Whether the five-year period set in section 1313(i), Tariff Act of 1930, as amended (19 U.S.C. 1313(i)), is suspended while an article is in a foreign-trade zone as privileged-domestic merchandise?

3. Whether zone-restricted status merchandise may be removed from a foreign-trade zone under the temporary-importation-bond procedure?

4. Whether the launching of a satellite that is owned and operated by an international organization is an exportation for drawback purposes?

Facts: Communications satellites are made in this country using imported parts. Spare satellites are to be stored in a foreign-trade zone until they are needed. The satellite may be stored for more than five years before being launched. Because of the sometimes lengthy storage period, it is necessary to test thoroughly each satellite before it is launched. Often, as a result of flaws discovered during this testing, it is necessary to rework those satellites too.

Law and analysis: Section 146.22(a), Customs Regulations, states that privileged-domestic status may be granted to merchandise that is manufactured in the United States as well as duty-paid foreign merchandise. Generally, a communications satellite made in the United States using foreign components is considered to be a manufacture of the United States. Because subparagraph (2), of section 146.22(a), clearly permits products wholly of foreign origin privileged domestic status if any applicable duty or tax is paid, a satellite made in this country with duty-paid foreign parts is entitled to privileged domestic status in a zone, even if the assembly process is not considered to be a manufacture. Since section 146.25(a) provides for zone-restricted status only on proper application, it is clear that the provision is optional with the person who admits goods into a zone. Zone-restricted status is not mandatory; the benefits of that status do not accrue unless the application for zone-restricted status is made and granted.

Section 1313(i), Tariff Act of 1930, as amended, provides that no drawback is allowable unless the completed article is exported within five years after importation of the imported merchandise. The pertinent part of the fourth proviso of section 81c, Tariff Act of 1939 as amended,

provides that merchandise taken into a zone from Customs territory for the sole purpose of exportation, destruction, or storage shall be considered to be exported for the purpose of drawback. The sixth proviso to section 81c provides for the exportation of merchandise from a zone, so it is clear that Congress did not consider that admission into a zone under the fourth proviso to be an actual exportation of the article; instead, the article is given the benefit of drawback even though it is not actually exported. Exportation requires a severance from the commerce of this country with the intention of placing the article into the commerce of another country. To gain the benefit of the fourth proviso, an application for admission under that provision must be made. There is nothing in section 81c to indicate the five-year period set in section 1313(i) was to be suspended during the period that an article otherwise entitled to drawback is in a zone. The only qualification made by section 81c is that if a person wishes to obtain the benefits of drawback without actually exporting the article, the person may do so by placing the article into the zone in zone-restricted status. A person cannot obtain that benefit without accepting the detriments of zone-restricted status. Section 81c only complements section 1313(i); it does not supersede it.

Section 146.47(a), Customs Regulations, enumerates the only types of entries that may be made for zone-restricted merchandise, absent a ruling of the Foreign-Trade-Zones Board permitting domestic consumption. Because, in the absence of such a ruling, zone-restricted merchandise may not be entered into American commerce, removal under the temporary-importation-under-bond procedure is not permitted. The types of entries set in section 146.47(a) contemplate Customs custody over the article until it is actually destroyed or exported; merchandise temporarily imported under bond is released to the custody of the importer. Such a release increases the possible diversion of zone-restricted merchandise into American commerce in derogation of the requirements of the fourth proviso of section 81c.

A decision dated July 16, 1968, which was published in abstract format as T.D. 68–206(1), held that satellites owned and controlled by an international organization which are launched so that they are permanently removed from the United States and are in international commerce are exported for drawback purposes.

Holdings: 1. Privileged-domestic status may be granted to satellites made in the United States with the use of duty-paid foreign parts that are to be stored in a foreign-trade zone.

2. The five-year period for exportation set in section 1313(i), Tariff Act of 1930, as amended, is not suspended for merchandise stored in a foreign-trade zone pending exportation.

3. Zone-restricted merchandise may not be removed from a foreign-trade zone by means of a temporary importation under bond.

4. The launching of a satellite, under the circumstances set forth in the decision dated July 16, 1968, an abstract of which was published as T.D. 68-206(1), is an exportation for drawback purposes.

U.S. Customs Service

General Notice

(19 CFR Chapter I)

Notice of Proposed Revision of the Customs Bond Structure and Solicitation of Comments

AGENCY: U.S. Customs Service, Department of the Treasury.

ACTION: Notice of proposed revision of the Customs bond structure and solicitation of comments.

SUMMARY: Customs is considering an extensive revision of its bond structure to consolidate and reduce the number of bond forms now in use. The purpose of the proposal is to simplify transactions between Customs and the importing public and to facilitate establishment of an efficient computerized bond control system. If the proposal is adopted, numerous amendments to the Customs Regulations will be necessary and will be the subject of a notice of proposed rulemaking published in the Federal Register. The public is invited to comment on the merits of the proposal and to suggest alternatives to the proposed bond format, coverages, and conversion approaches.

DATES: Comments must be received on or before (60 days from the date of publication in the Federal Register).

ADDRESS: Comments (preferably in triplicate) should be addressed to the Commissioner of Customs, Attention: Regulations and Information Division, U.S. Customs Service, 1301 Constitution Avenue, NW., Room 2426, Washington, D.C. 20229.

FOR FURTHER INFORMATION CONTACT: Joseph C. Goody, Duty Assessment Division, U.S. Customs Service, 1301 Constitution Avenue, NW., Washington, D.C. 20229 (202–566–5307).

SUPPLEMENTARY INFORMATION:

BACKGROUND

When merchandise other than noncommercial merchandise accompanying a traveler arrives in the United States, it ordinarily remains in Customs custody until the importer, consignee, or the

authorized agent of either, establishes ownership and complies with the applicable Customs laws and regulations or laws and regulations enforced by Customs for other Federal and State agencies. In some instances, especially in the case of duty-free noncommerical importations, the merchandise may be released to the importer, consignee, or an authorized agent merely upon furnishing proof of ownership, and no formal documentation is required. However, in most cases involving commercial importations, formal documentation is required to obtain release of the merchandise. The Customs transaction releasing the merchandise to the importer is referred to as an "entry".

As a part of the entry documentation, the importer, consignee, or an authorized agent usually is required to file a bond with Customs. The bond, among other things, guarantees that proper entry summary, with payment of estimated duties and taxes when due, will be made for imported merchandise and that any additional duties and taxes subsequently found to be due will be paid. The bond also guarantees redelivery of imported merchandise to Customs custody for examination or inspection if found not to comply with applicable laws and regulations. Redelivery may be required as a result of a failure to properly mark, label, clean, or fumigate the imported merchandise; or a failure to destroy or export the imported merchandise, if appropriate.

A bond also may provide, as a condition of its satisfaction, for the production of any missing invoices, declarations, certificates, or other documents required in connection with the entry of imported merchandise, in the form and within the time required.

Bonds are used to secure other Customs transactions besides those of importers. For example, carriage of imported merchandise that has not been examined or appraised by Customs must be secured by a Customs bond to guarantee performance of various Customs obligations. Those performance bonds are required from bonded carriers, bonded cartage and lighterage operators, and persons who are authorized to carry merchandise when bonded carrier facilities are not reasonably available. Among other things, those persons are contractually bound to safely deliver that merchandise to Customs at the destination. They are bound to report arrival of the merchandise to Customs at the destination so that it can be examined for Customs purposes. They are bound not to deliver that merchandise to the ultimate consignee until Customs determines that it can be released. If the bond principal fails to perform as agreed, the principal and surety become liable for payment of liquidated damages.

A similar situation exists for persons who operate Customs bonded warehouses, container stations, and foreign-trade zones. A bond from these people is needed to protect the Government from loss.

Generally, imported merchandise is placed in such places before the amount of duty due has been determined. Moreover, until that merchandise is withdrawn for consumption, no duty is paid by the importer. The bond given by such persons serves as a guarantee that the stored merchandise will be kept safely and that it will be released only when authorized to do so by Customs.

Other bonds are required in special instances. For example, persons who use the accelerated drawback program are required to file a bond to guarantee repayment of any money erroneously paid. Another special bond is that required of copyright owners who claim that an imported article infringes their copyright and request Customs to detain that article pending a final determination on the infringement claim. That bond insures that any damage caused to the importer by detention will be corrected.

Presently, there are approximately 50 different forms of Customs bonds in use. Part 113, Customs Regulations (19 CFR Part 113), sets forth a description of the various bonds and the general requirements applicable to Customs bonds. It contains the general authority and powers of the Commissioner of Customs to require bonds, the classes of bonds, procedures for their approval and execution, general and special bond requirements, requirements which must be met to be either a principal or a surety, requirements concerning the production of documents, and the authority and manner of assessing damages and of canceling the bond or charges against a bond.

Customs is considering an extensive revision of its existing bond structure to consolidate the number of bond forms and to establish an efficient computerized bond control system. As part of the revision process, discussions have been held with representative segments of the importing community. A number of suggestions received during these discussions have been incorporated into this document.

The purpose of this notice is to afford the public a further meaningful opportunity to participate at an early stage in the revision process by submitting comments on the merits of the proposal and by suggesting alternatives to the proposed bond format, coverages, and conversion approaches.

TYPES OF BONDS

Under the proposal, two types of Customs bonds, designated "single transaction" and "multi-transaction" would be established.

1. *Single Transaction:* The single transaction bond would be used for one transaction at a specific port under the same conditions as a single entry bond currently is being used and would require the approval of the district director at the port where filed.

2. *Multi-Transaction:* The multi-transaction bond would replace

present term, blanket, and consolidated bonds and be used for many transactions over a definite period of time. It also would replace the continual type bonds which cover conditions of a continuing nature, such as, carriage of merchandise and establishment of warehouses. This would be similar to, but a more general type application of, the existing Consolidated Aircraft Bond, Customs Form 7605.

An amount associated with each condition referred to on the multi-transaction bond would represent the liability limit for that specific condition. It is anticipated that each condition would be self-contained and appear in a separate section or subsection of the Customs regulations.

The bond contract would remain in full force and effect for one year commencing on the effective date shown on the bond and for each succeeding annual period, or until terminated. Current Customs policy prohibiting the discontinuance of bond coverage before the end of the initial term unless good cause is shown and Customs concurs would not be changed.

At least 60 days before the bond anniversary date, Customs would issue a courtesy notice advising the principal that the bond would terminate on the anniversary date unless the principal notifies Customs by returning the notice, or otherwise advises Customs in writing, at least 30 days before the bond expiration date, of its intent to continue the contract. Thus, notification of premium payment on the bond would be sufficient to renew a bond contract for another term.

If a party to the bond contract intends to terminate the contract, that party would be required to notify the other parties to the contract and Customs in writing at least 30 days before the effective date of the termination.

In order that small importers will not be required to purchase more coverage than necessary, it is proposed to create two classes of coverage within the multi-transaction type bonds, the *national class* and the *district class*. The *national class*, at the option of the principal, would include all or specific transactions of a particular principal on a nationwide basis. The *district class*, at the option of the principal, would include all or specific transactions of a particular principal within one district. For example, term bonds which currently are filed on a port level would be consolidated into one district bond. The conditions of this class of bond could be the same as those of a national bond except that the scope of coverage would be limited to one district and the minimum amount of bond required could be less than the minimum amount required on a national bond. In keeping with existing Treasury Department directives and Customs policy, customhouse brokers would not be approved as principals on a national class bond to be used in their capacity as brokers. In addition, this would not change current policy which permits a licensed

customhouse broker to be approved as a principal on a national class bond to cover the entry of merchandise actually owned by the broker.

Appendix A to this document lists the Customs bonds currently in use. Whenever possible it is intended to eliminate unnecessary conditions in the proposed bond structure.

Bond Forms

Under the proposal, there would be one standardized bond form for the single transaction and multi-transaction bonds. This standardized bond form, as it might appear, is set forth as Appendix B to this document. A space would be provided on the bond form where the conditions covered by the bond and the related surety liability limit would be indicated. Standardized conditions would be enumerated in the Customs Regulations (19 CFR Chapter I). This procedure would eliminate repeating the similar conditions currently contained in the various Customs bonds. If the proposal is adopted, the Customs Regulations would be revised to incorporate all bonding requirements into the same part in 19 CFR Chapter I. In conjunction with this revision, the bond conditions will be clarified and the language modernized and simplified. Appendix C contains some specific examples of conditions which currently appear in Customs bonds and how they may be written in more modern and simplified language.

Customs Form 53, "Bond Transcript", would continue to be required, but the form might be revised as illustrated in Appendix D to this document. Customs Form 53 would be filed with each bond submitted for approval whether the bond is supported by surety, cash, or other acceptable security.

Based on the comments received and if our continuing analysis indicates it is feasible, the specific information unique to the Customs Form 53 will be incorporated into the proposed standardized bond form. Thus, the "Bond Transcript" would be discontinued. The standardized bond form, as it might appear under these circumstances, is set forth as Appendix E to this document.

Bond Modification

Current Customs policy permitting the addition of principals to bonds and name and address changes after bond approval would not change. Any other bond contract change would require the termination of the old bond and filing of a new bond, as currently prescribed in section 113.23(d), Customs Regulations (19 CFR 113.23(d)).

Bond Control

A computerized bond control system would be implemented in conjunction with the Customs bond proposal. The proposal would

reduce the number of bonds required by a principal to conduct Customs business and thus facilitate the efficient operation of the computerized system.

Under the computerized system, data would be verified and validated, and computer files would be updated, soon after a transaction is entered into the system via a terminal. Routine, time consuming tasks which are a necessary part of the bond approval procedure would be automated to speed up the approval process. For example, the lead time currently required for filing a bond and related transcript before its effective date would be reduced significantly.

To improve querying and locating bonds, each bond would be assigned a nine digit control number. The first two digits would identify the district where the bond is filed. The last seven digits would be a serial number control uniquely identifying the bond within the district plus a check digit. This bond number would appear on all copies of the bond, whether it is a Customs bond form or a privately printed bond form. Thus, just by knowing the bond number, interested individuals would be able to determine where the bond contract is located physically.

The computerized system would provide increased revenue protection and improve the timely availability of information to authorized officials on a "need to know" basis. In addition, the computerized system would allow bonding procedures to be standardized nationwide. Through the interaction between the bond processing system and other Customs computer processing systems, bond and bond related information would be available to authorized officials on a consolidated basis.

Conversion to the New Bond Structure

To fulfill the Customs objective of establishing the new bond structure and related control system with the least adverse impact on Customs and affected parties, two conversion approaches are being considered.

The first approach would provide for a 90- or 120-day transition period during which all bonds would be terminated and replaced by bonds utilizing the new format. Existing term-type or continual-type bonds not replaced by bonds utilizing the new format would not be considered valid by Customs at the end of the 90- or 120-day transition period.

The second approach would consist of the following alternatives:

1. If a party has only a continual-type bond filed with Customs, a transition period would be provided during which a bond utilizing the new format would be filed in accordance with the procedure stated in the first approach.

2. If a party has more than one term-type bond in effect, the expiration date of the existing bond with the latest termination date would become the replacement control date. Customs would announce the date principals would be required to determine the replacement control date. Applicable replacement control dates thus would be established for the entire importing community at the same time.

Once a replacement control date has been established for an individual or firm, Customs would not approve any bond submitted under the old bond format when the term of that bond would be effective beyond the replacement control date.

3. If a party has a term and continual-type bond in effect, the continual-type bond would be terminated as of the replacement control date established for the term-type bond. A bond in the new format would be filed after the replacement control date.

COMMENTS

Customs invites written comment (preferably in triplicate) from all interested parties on the bond revision proposal.

Commenters should address themselves, among other things, to (1) the proposed format for the bond form, (2) the proposed format for consolidating the bond conditions in the regulations, as well as recommendations for alternative formats, (3) the proposed approaches for conversion to the new system as well as suggestions for additional approaches and (4) the advantages or disadvantages of the new system as it impacts on their operation.

Comments submitted will be available for public inspection in accordance with section 103.8(b), Customs Regulations (19 CFR 103.8(b)), on regular business days between 9:00 a.m. and 4:30 p.m. at the Regulations and Information Division, Room 2426, Headquarters, U.S. Customs Service, 1301 Constitution Avenue NW., Washington, D.C. 20229.

EXECUTIVE ORDER 12291

This document will not result in a regulation which is a "major rule" as defined by section 1(b) of Executive Order 12291.

REGULATORY FLEXIBILITY ACT

It appears that the rule, if promulgated, may have a significant economic impact on a substantial number of small entities, and thus require an initial regulatory flexibility analysis in accordance with

the provisions of section 3 of the Regulatory Flexibility Act (5 U.S.C. 603). The Customs Office of Economic Analysis is in the process of determining whether such an analysis is indeed necessary. Accordingly, if it is decided to proceed with this matter, the notice of proposed rulemaking will have as an attachment (1) the initial regulatory flexibility analysis or (2) a certification by the Secretary of the Treasury that the analysis is not, in fact, required by the Act.

AUTHORITY

This document is issued under the authority of R.S. 251, as amended (19 U.S.C. 66), and sections 623, as amended, 624, 46 Stat. 759 (19 U.S.C. 1623, 1624).

DRAFTING INFORMATION

The principal author of this document was John Elkins, Regulations and Information Division, Office of Regulations and Rulings, U.S. Customs Service. However, personnel from other Customs offices participated in its development.

WILLIAM T. ARCHEY,
Acting Commissioner of Customs.

Approved: May 4, 1981.

JOHN P. SIMPSON,
Acting Assistant Secretary of the Treasury.

APPENDIX A

The purpose of this appendix is to aid interested parties to compare the bond forms they presently use with the proposed new bond structure formats and concepts embodied in Appendix B, C, and E. The following list indicates the various activities, conditions, and obligations of Customs bonds currently in use. This appendix is for example purposes and subject to change.

Single transaction

1. CF 4615, Bond of Claimant of Seized Goods for Costs of Court.
2. CF 7303, Bond to Produce Manifest and Shipper's Export Declaration for Goods exported to Canada.

Multitransaction

1. CF 3583, Proprietor's Manufacturing Warehouse Bond (Class 6).
2. Blanket Smelting and Refining Bond.

Single transaction	*Multitransaction*
3. CF 7547, Special Single Entry Carpet Wool and Camel's Hair Bond.	3. Public Gauger's Bond.
4. CF 7551, Immediate Delivery and Consumption Entry Bond (Single Entry).	4. CF 3851, Proprietor's Warehouse Bond.
5. CF 7555, Warehouse Entry Bond.	5. CF 3587, Carriers Bond.
6. CF 7557, Bond for Exportation or Transportation or for Transportation and Exportation (Single Entry).	6. CF 3588, Private Carrier's Bond.
7. CF 7561, Bond for Articles Entered or Withdrawn from Warehouse Conditionally Free of Duty.	7. CF 3855, Bond of Customs Cartman or Lighterman.
8. CF 7563, Bond for Temporary Importations.	8. CF 7303, Bond to Produce Manifest and Shipper's Export Declaration for Goods Exported to Canada.
9. CF 7565, Exhibition Bond.	9. CF 7549, Special Bond-Wool or Hair of the Camel (Term).
10. CF 7567, Vessel, Vehicle or Aircraft Bond (Single Entry).	10. CF 7553, Immediate Delivery and Consumption Entry Bond (Term).
11. CF 7571, Bond on Entry for or Withdrawal from Manufacturing Warehouse.	11. CF 7559, Bond for Exportation or Transportation or for Transportation and Exportation (Term).
12. CF 7581, Bond to Produce Bill of Lading (Single Entry).	12. CF 7587, Bond for the Control of Certain Instruments of International Traffic.
13. CF 7593, Landing Bond.	13. Bond for the Control of Identified Shipping Containers.
14. CF 7597, Bond for Use in Connection with Requests for Overtime Services Made by or on Behalf of Owners or Consigness of Merchandise (Single Entry).	14. CF 7563–A, Bond for Temporary Importations (Term).

Single transaction	*Multitransaction*
15. CF 7601, Bond of Actual Owner to Cover the Payment of Increased and Additional Duties and Taxes, the Redelivery of Prohibited Merchandise, the Marking of Merchandise under Customs and Related Laws, and for other Purposes.	15. CF 7569, Vessel, Vehicle, or Aircraft Bond (Term).
16. CF 7603, Bond for Conditionally-Free Withdrawal of Distilled Spirits (Including Alcohol) Wines, or Beer, for Supplies of Fishing Vessels (Single Entry or Term).	16. CF 7595, General Term Bond for Entry of Merchandise.
17. CF 7609, Bond for Accelerated Payment of Drawback (Single Entry).	17. CF 7599, Bond for Use in Connection with Request for Overtime Services Made By or on Behalf of Parties in Interest (Term).
18. Special Bond for Entry Merchandise Believed to Involve Unfair Practices.	18. CF 7603, Bond for Conditionally-Free Withdrawal of Distilled Spirits, (Including Alcohol) Wines, or Beer, for Supplies of Fishing Vessels (Single Entry of Term).
19. Special Bond, for the Clearance of Vessels Penalized for Carrying Narcotics.	19. CF 7605, Air Carrier Blanket Bond.
20. Special Bond for the Observance of Neutrality.	20. CF 7611, Bond for Accelerated Payment of Drawback (Term).
21. Copyright Bond.	21. CF 7613, Drawback Export Bond.
22. Special Bond for the Importation of Flammable Fabrics.	22. Containerized Cargo Bond (Term).
23. Special Performance Bond.	23. Trade Fair Bond.
24. Bond of Customs Cartman for Issuance of Temporary Identification Card.	24. Special Performance Bond.
	25. Foreign Trade Zone Operator's Bond.

APPENDIX B

This is an example of the form a bond might take under the new bond structure. This bond would be a two-page single sheet, 8½ by 11 form.

CUSTOMS BOND

Bond Number ___

In order to secure payment of duty, tax or charge and compliance with law or regulation as a result of activity covered by any condition referenced below, _____, as principal, and _____, as surety bond themselves to the United States in an amount, or amounts as set forth below.

SECTION I (check one box and fill the applicable blank spaces)

☐ Single Transaction Bond—
Date of Arrival _____ Place of Arrival _____
Entry No. _____ Date of Entry _____

☐ District Class—Principal expects to conduct business in District of _____

☐ National Class—Applicable at all Customs locations

A multi-transaction bone remains in force for one year beginning _____ 19__. For each succeeding annual period, or until terminated, it constitutes a separate bond for each period at the amounts listed below for any liability that accrues in each period.

A multi-transaction bond cannot be unilaterally terminated before the first anniversary date of the bond unless a party thereto can show sufficient cause and Customs concurs. The intention to terminate or renew this bond coverage must be conveyed within the time period and manner prescribed in the Customs Regulations.

SECTION II (fill in as indicated—see Customs Regulations for coverage available)

Activity code	Activity name	Conditions codified in Customs Regulations	Limit of liability

SECTION III (Coverages in addition to the minimum coverage in section II)

Activity code	Activity name	Conditions in Customs	Codified Regulations	Limit of liability

Witness our hands and seals this day of , 19 .

Principal and Surety agree that they are bound to the same extent as if they executed a separate bond covering each of the set(s) of conditions set forth herein.

In no event shall the liability of the Surety for any and all claims under one set of bond conditions exceed the limit of liability specified for that particular set of bond conditions.

If surety fails to appoint an agent under section 7, title 6, U.S. Code, surety consents to service on the clerk of any U.S. District Court or the U.S. Court of International Trade, where suit is brought on the bond. That clerk is to send notice of the service to surety at:

_____

(mailing address requested by the surety)

Signed, sealed, and delivered in the presence of—

_____

Name Address (Witness)

_____

Name Address (Witness)

_____

Name Address (Principal) (SEAL)

_____

Name Address (Surety) (SEAL)

CERTIFICATE AS TO CORPORATE PRINCIPAL

I, , certify that I am the secretary of the corporation named as principal in the within bond, that , who signed the said bond on behalf of the principal, was then of said corporation; that I know his signature, and his signature thereto, is genuine; and that said bond was duly signed, sealed, and attested for and in behalf of said corporation by authority of its governing body.

(CORPORATE SEAL)

NOTE.—The above certificate to be used when no power of attorney has been filed with the District Director of Customs.

Schedule of Specific Activities and Minimum Coverage for the Principals

Code	Name	Activity—The conditions set forth in the Customs Regulation sections shown are required for the related activity [1]
1	Importer (brokers)	113.71.
2	Internat'l carriers	113.72, 113.98, 113.103.
3	Bonded carrier	113.73, 113.98, 113.104, 113.105, 113.106, 113.108.
4	Cartmen and lighterman	113.74, 113.98, 113.104.
5	Private carrier	113.73, 113.98, 113.104, 113.105, 113.107, 113.108.
6	Class 2, 3, 4, 5, and 8 warehouse operator.	113.75, 113.109, 113.110.
7	Class 6 warehouse operator	113.76, 113.109, 113.110, 113.112.
8	Class 7 warehouse operator	113.71, 113.77, 113.84, 113.110, 113.112.
9	Container station operator	113.87, 113.98, 113.108.
10	Foreign trade zone operator	113.79.

[1] For additional bond coverage available, refer to Part 113, Customs Regulations.

NOTE.—The section numbers shown are for illustration purpose only.

APPENDIX C

Examples of modernized and simplified bond conditions as they currently appear on customs bonds and as they might appear under the proposal.

Examples of modernized and simplified bond conditions as they currently appear on customs bonds and as they might appear under the proposal.

1. Condition 1 of CF 7553, Immediate Delivery and Consumption Entry Bond.

The above-bounden principal, in consideration of the release of all or any part of such shipments as may be charged against this bond before the full amount of duties and taxes imposed upon or by reason of importation has been finally determined, and notwithstanding section 485(d), Tariff Act of 1930, or any other provisions of law, voluntarily undertakes and agrees to pay any and all such duties and taxes found to be due on each entry in question, but not in excess of the amount of this bond, upon condition that no other provision of

this bond shall be invoked for the purpose of enforcing the collection of such duties and taxes and upon the further condition that this obligation to pay any and all such duties and taxes found to be due on the shipment (not exceeding the amount of this bond) shall become null and void and of no force and effect as to any entry on and after the date on which the above-bounden principal files with the district director in the manner and within the time prescribed by the regulations a superseding bond on Customs Form 7601 of the owner whose declaration has been filed in accordance with the provisions of section 485(d), in which bond the owner undertakes and agrees to pay any and all such duties and taxes found due on the shipment covered by the above-mentioned entry.

PROPOSED LANGUAGE

Agreement to pay duties

If principal enters merchandise at any port during the bond period and gets release of all or part of the merchandise before Customs determines the quantity and value of the merchandise and the full amount of duties and taxes due, obligors (principal and surety), on demand by the notice of liquidation, agree to pay any duty and tax, due on any entry charged against this bond. This obligation to pay ends as to any entry on the date when principal timely files with the district director a superseding bond of the owner whose declaration has been properly filed, in which superseding bond the owner agrees to pay any duty and tax due on that entry.

2. Conditions 4, 5 and 6 of CF 7553, Immediate Delivery and Consumption Entry Bond.

And if in any case the above-bounden principal shall redeliver or cause to be redelivered to the order of the district director of Customs, on demand by him, in accordance with the law and regulations in effect on the date of the release of said articles, any and all merchandise found not to comply with the law and regulations governing its admission into the commerce of the United States, unless before such demand the said principal shall have filed with the district director of Customs a superseding bond on Customs Form 7601 in which the actual owner whose declaration has been filed pursuant to section 485(d), Tariff Act of 1930, shall have undertaken upon proper demand on such owner to effect such redelivery; or, in default of redelivery after a proper demand on him, the above-bounden principal shall pay to the said district director such amounts as liquidated damages as may be demanded by him in accordance with the law and regulations, not exceeding the amount of this obligation, for any breach or breaches thereof;

And if in any case the above-bounden principal, in respect of any of the merchandise released from Customs custody, shall redeliver or cause to be redelivered to the order of the district director of Customs such additional packages or quantities of merchandise pursuant to section 499, Tariff Act of 1930, as amended, for the purpose of examination, inspection, or appraisement, upon a demand made at any time before the report of appraisement, unless before that time the said principal shall have filed with the district director of Customs a superseding bond on Customs Form 7601 in which the actual owner whose declaration has been filed pursuant to section 485(d), Tariff Act of 1930, shall have undertaken upon proper demand on such owner to effect redelivery for such purposes; or, in default of redelivery after a proper demand on him, the above-bounden principal shall pay to the said district director such amounts as liquidated damages as may be demanded by him in accordance with the law and regulations, not exceeding the amount of this obligation, for any breach or breaches thereof;

And if in any case the above-bounden principal shall redeliver or cause to be redelivered to the order of the district director of Customs for marking pursuant to the provisions of paragraph 367 or 368, or section 304, Tariff Act of 1930, as amended, upon a demand made not later twenty (20) days after the report of appraisement, such of the merchandise as may have been released from Customs custody, unless before that time the said principal shall have filed with the district director of Customs and bond on Customs Form 7601 in which the actual owner whose declaration has been filed pursuant to said section 485(d) shall have undertaken upon proper demand on such owner to effect redelivery for such purposes; or, in default of redelivery after a proper demand on him, the above-bounden principal shall pay to the said district director such amounts as liquidated damages as may be demanded by him in accordance with the law and regulations, not exceeding the amount of this obligation, for any breach or breaches thereof.

PROPOSED LANGUAGE

Agreement to redeliver merchandise

If merchandise is released conditionally to principal before all required evidence is produced, before its quantity and value are determined, or before its right of admission into the United States is determined, principal agrees to redeliver timely the merchandise released to the principal on demand by Customs if the merchandise—

(i) fails to comply with the laws or regulations governing admission to the United States;

APPENDIX D

BOND TRANSCRIPT (Proposed)

PAGE: OF:

1. PRINCIPAL'S NAME AND ADDRESS	2. CARRIER DESIGNATION	3. BOND NUMBER
		4. PRINCIPAL'S IMPORTER NUMBER

5. SURETY NUMBER	6. SURETY AGENT SOC. SEC. NO.	7. SURETY AGENT NAME

8. BOND EFFECTIVE DATE	9. BOND EXECUTION DATE	10. BOND CLASS (DIST/MAT'L)	11. DISTRICT/PORT NAME

12. TERMINATION (Complete Blocks 1 thru 13)

☐ CHECK HERE TO APPLY FOR TERMINATION OF A BOND ON FILE. SUBMIT SIGNED REQUEST, PROPERLY DOCUMENTED, TO DISTRICT DIRECTOR WHERE BOND WAS FILED. SHOW REQUESTED DATE OF TERMINATION.

Requested Date of Termination: M M D D Y Y

13. BOND TYPE

14. CONDITIONS/ AMOUNTS:				
COND. AMOUNT	COND. AMOUNT	COND. AMOUNT	COND. AMOUNT	COND. AMOUNT
COND. AMOUNT	COND. AMOUNT	COND. AMOUNT	COND. AMOUNT	COND. AMOUNT

LIST BELOW ALL ADDITIONAL NAMES ON THE BOND OF PRINCIPALS AND THOSE UNDER WHICH THE PRINCIPALS DO BUSINESS INCLUDING THEIR ACCOUNT NUMBER(S).

18. TOTAL IMPORTERS LISTED:

16. IMPORTER NUMBER	17. IMPORTER NAME	16. IMPORTER NUMBER	17. IMPORTER NAME

18. CODE(S) OF RIDER(S) ATTACHED TO BOND	20. CERTIFICATION BY U.S. CUSTOMS:
☐ NO RIDERS INCLUDES RIDERS: ☐☐☐	APPROVED BY:
19. BOND HOLDER'S SIGNATURE DATE	DISTRICT:

Proposed Customs Form 53 (12-14-79)

(ii) must be examined, inspected, or appraised as required by section 449, Tariff Act of 1930, as amended; or

(iii) must be marked as required by Headnote 4, Part 2E, Schedule 7, Tariff Schedules of the United States, or by section 304, Tariff Act of 1930, as amended.

If principal defaults obligors agree to pay liquidated damages as may be demanded by Customs. This obligation to redeliver ends as to any entry on the date when principal timely files a superseding bond of the owner whose declaration to so redeliver has been properly filed.

APPENDIX E

This is an example of the form a bond might take under the new bond structure. This bond would be a four page, single sheet, 8½ by 22 folded to 8½ by 11 form.

CUSTOMS BOND

Bond Number __

In order to secure payment of duty, tax or charge and compliance with law or regulation as a result of activity coverage by any condition referenced below (Principal's Name and Importer No.) _____ ____, as principal, and (Surety Name and No.), _____, as surety bind themselves to the United States in the amount or amounts, as set forth below.

SECTION I (Check one box and fill the applicable blank (spaces)

☐ Single Transaction Bond—
Date of Arrival _____ Place of Arrival _____
Entry No. _____ Date of Entry _____

☐ District Class—Principal expects to conduct business in District of _____

☐ National Class—Applicable at all Customs locations

A Multi-Transaction bond remains in force for one year beginning _____, 19__. For each succeeding annual period, or until terminated, it constitutes a separate bond for each period at the amounts listed below for liability that accrues in each period.

A Multi-Transaction bond cannot be unilaterally terminated before the first anniversary date of the bond unless a party thereto can show sufficient cause and Customs concurs. The intention to terminate or renew this bond coverage must be conveyed within the time period and manner prescribed in the Customs Regulations.

SECTION II (fill in as indicated—see Customs Regulations for coverage available [1])

Activity code	Activity name	Conditions codified in Customs Regulations	Limit of liability

SECTION III (Coverages in addition to the minimum coverage in SECTION II)

Activity code	Activity name	Conditions codified in Customs Regulations	Limit of liability

Section IV List below all tradenames or unincorporated divisions including their account number(s).

15. Total Importers Listed:

Importer number	Importer name	Importer number	Importer name

Principal and surety agree that any charge against the bond in any of the listed names is as though it was made by the principals.

Witness our hands and seals this _____' day of _____', 19 __ (execution date).

Principal and surety agree that they are bound to the same extent as if they executed a separate bond covering each of the set(s) of conditions set forth herein.

In no event shall the liability of the surety for any and all claims under one set of bond conditions exceed the limit of liability specified for that particular set of bond conditions.

If the surety fails to appoint an agent under section 7, Title 6, United States Code, surety consents to service on the Clerk of any United States District Court or the U.S. Court of International Trade, where suit is brought on this bond. That clerk is to send notice of the service to surety at:

(mailing address requested by the surety)

Signed, sealed, and delivered in the presences of--

Name	Address	(Witness)	
Name	Address	(Witness)	
Name	Address	(Principal)	(SEAL)
Name	Address	(Surety)	(SEAL)

Name Surety Agent Agent Social Security No.

CERTIFICATE AS TO CORPORATE PRINCIPAL

I, _____, certify that I am the _____ secretary of the corporation named as principal in the within bond, that _____, who signed the said bond on behalf of the principal, was than _____— of said corporation; that I know his signature, and his signature thereto, is genuine; and that said bond was duly signed, sealed, and attested for and in behalf of said corporation by authority of its governing body.

_____ (CORPORATE SEAL)

NOTE.—The above certificate to be used when no power of attorney has been filed with the District Director of Customs.

Schedule of Specific Activities and Minimum Coverage for the Principals

Code	Name	Activity—The conditions set forth in the Customs Regulation sections shown are required for the related activity [1]
1	Importer (brokers)	113.71.
2	Internat'l carriers	113.7 113.98, 113.103.
3	Bonded carrier	113.7 113.98, 113.104, 113.105, 106, 113.108.
4	Cartmen and lighterman	113.74, 113.98, 113.104.
5	Private carrier	113.73, 113.98, 113.104, 113.105, 113.107, 113.108.
6	Class 2, 3, 4, 5, and 8 warehouse operator	113.75, 113.109, 113.110.
7	Class 6 warehouse operator	113.76, 113.109, 113.110, 113.112.
8	Class 7 warehouse operator	113.71, 113.77, 113.110, 113.112.
9	Container station operator	113.87, 113.98, 113.108.
10	Foreign trade zone operator	113.79.

[1] For additional bond coverage available, refer to Part 113, Customs Regulations.

NOTE.—The section numbers shown are for illustration purposes only.

INSTRUCTIONS

This part of the form will contain a detailed explanation of how to fill out the form.

United States Court of International Trade

One Federal Plaza
New York, N.Y. 10007

Chief Judge

Edward D. Re

Judges

Paul P. Rao
Morgan Ford
Scovel Richardson
Fredrick Landis
James L. Watson
Herbert N. Maletz
Bernard Newman
Nils A. Boe

Senior Judge

Samuel M. Rosenstein

Clerk
Joseph E. Lombardi

Decisions of the United States Court of International Trade

(Slip Op. 81–42)

ST. PAUL FIRE AND MARINE INSURANCE COMPANY, PLAINTIFF *v.* UNITED STATES, DEFENDANT

Court No. 76–11–02515

On Defendant's Motion to Dismiss

(Dated May 11, 1981)

Wayne Jarvis, Ltd. (*Wayne Jarvis* and *Michael G. Hodes* of counsel) for the plaintiff.

Thomas S. Martin, Acting Assistant Attorney General; *Joseph I. Liebman* Attorney in Charge, International Trade Field Office, Commercial Litigation Branch (*John J. Mahon* on the briefs), for the defendant.

MALETZ, *Judge:* The facts in this case are exceedingly simple. Plaintiff was a surety for two importers, Carnival International Corp. of New York, N.Y., and Heller International, Inc. of Los Angeles, Calif. On March 8, 1974, an entry of Carnival was liquidated resulting in an increase in duty of $1,280.50, and on January 10, 1975, an entry of Heller was liquidated resulting in an increase of duty of $66.99. No protest was ever filed by any party contesting the liquidation of these entries and it is undisputed that the liquidations were proper in all respects.

Carnival and Heller, however, failed to pay the increased duties owing on these two liquidated entries. In that circumstance on December 30, 1975, the Customs Service, pursuant to section 24.72 of the Customs Regulations, applied certain sums otherwise due plaintiff as a result of its status as surety in other transactions not related to this action to the obligations of Carnival and Heller on the two entries in question as a result of plaintiff's status as surety on those entries.[1]

On March 30, 1976, plaintiff filed protests against these set-offs which were denied by the Customs Service in Moy 1976. Suit in this court followed. Defendant has moved to dismiss contending, among other things, that the court lacks subject matter jurisdiction of this action.

At the outset, it is to be noted that when the present action was commenced, the jurisdiction of this court to the extent relevant was limited by 28 U.S.C. § 1582(a) to civil actions involving " * * * (2) the classification and rate and amount of duties chargeable [and] (3) all charges or exactions of whatever character within the jurisdiction of the Secretary of the Treasury * * *." Since there is no dispute about the correctness of the classification and rate and amount of duties chargeable on the two entries in question, the single issue is whether the set-offs against the plaintiff as a result of its contractual obligations as surety for unpaid customs duties on those entries constitute "charges or exactions" within the meaning of section 1582(a)(3).

In the court's view, these set-offs are not such "charges or exactions." It is clear from the structure of section 1582(a) (2) and (3) that questions relating to the duties found to be due upon liquidation constitute one subject matter category, and the imposition of charges or exactions another. Thus "[t]here is a distinction between the 'rate and amount of duties chargeable' and 'exactions,' * * *."

---

[1] Section 24.72 of the Customs Regulations (19 CFR § 24.72) provides: "When an importer of record or any other party has a judgment or other claim allowed by legal authority against the United States, and he is indebeted to the United States, either as principal or surety, for an amount which is legally fixed and undisputed, the collector shall set off so much of the judgment or other claim as will equal the amoun of the debt duet .he Government."

best copy available

Puget Sound Freight Lines v. *United States*, 19 Cust. Ct. 70, 72, C.D. 1070 (1947), *aff'd*, 36 CCPA 70, C.A.D. 400, 173 F. 2d 578 (1949). In this setting, what is involved here is the collection of customs duties found to be due upon liquidation. The fact that these duties were collected from the plaintiff surety rather than the importers, Carnival and Heller, who failed to pay them, does not transform them into charges or exactions. As Judge Newman of this court explained in *Alberta Gas Chemicals, Inc.* v. *Blumenthal*, 82 Cust. Ct. 77, 81, C.D. 4792, 467 F. Supp. 1245, 1249–1250 (1979), the terms "charges and exactions" "have been applied to actual assessments of specific sums of money (*other than ordinary customs duties*) on imported merchandise." [Emphasis added.] This case involves just that—"ordinary customs duties"—which cannot be considered "charges or exactions" within the context of section 1582(a)(3).

Moreover, it is established that a demand for payment of duties previously found due upon liquidation cannot constitute an "exaction" against which a protest may be filed under 19 U.S.C. § 1514.[2] *United States* v. *Mexican Petroleum Corp.*, 28 CCPA 90, 96, C.A.D. 130 (1940); *Schenley Import Corp.* v. *United States*, 28 Cust. Ct. 170, 173, C.D. 1405 (1952); *Hiram Walker & Sons, Inc.* v. *United States*, 25 CCPA 189, T.D. 49293 (1937); *United States* v. *Andrews & Co.*, 14 CCPA 62, 64 T.D. 41576 (1926). Manifestly, if the demand for paying of previously liquidated duties cannot constitute a protestable "exaction," neither can the actual collection of those duties, whether collection is by set-off or otherwise.

Plaintiff argues though that it is not attacking the prior liquidaliquidations but rather is challenging "an independent transaction involving an exaction against a party who is not an importer and who questions the legal basis upon which its property was taken to satisfy another's duty liability." Stated otherwise, plaintiff is arguing in effect that its property was taken without process. But this argument proves too much. For if plaintiff believes it is not legally responsible for the amount of the unpaid Customs duties involved in the two liquidated entries in this case, it is in the wrong forum. The proper court in which to contest that issue is the district court or the Court of Claims, not this court. See, e.g., *Puget Sound Freight Lines* v. *United States*, *supra*, 36 CCPA at 78, 173 F. 2d at 583–584.

For the foregoing reasons, defendant's motion to dismiss for lack of subject matter jurisdiction is granted and the action is hereby dismissed.[3]

---

[2] When the present action was commenced, 19 U.S.C. § 1514(a) provided in relevant part that protests could be filed against decision of Customs as to "* * * (2) the classification and rate and amount of duties chargeable [and] (3) all charges or exactions of whatever character within the jurisdiction of the Secretary of the Treasury * * *." 28 U.S.C. § 1582(c) in turn deprived this court of jurisdiction unless a protest had been filed as prescribed by 19 U.S.C. § 1514.

[3] In view of this holding, it is unnecessary to consider defendant's alternative contention that plaintiff lacks standing to maintain this action.

(Slip Op. 81–43)

JAPAN EXLAN COMPANY, LTD., MITSUBISHI RAYON CO., LTD., PLAINTIFFS *v.* UNITED STATES, DEFENDANT, AMERICAN YARN SPINNERS ASSOCIATION, INTERVENOR

Court No. 80–5–00755

ASAHI CHEMICAL INDUSTRY COMPANY, LTD., PLAINTIFF *v.* UNITED STATES, DEFENDANT, AMERICAN YARN SPINNERS ASSOCIATION, INTERVENOR

Court No. 80–5–00755–S

Memorandum Opinion and Order Governing Access by Plaintiffs to Confidential Documents

(Dated May 12, 1981)

RAO, *Judge:* Plaintiffs seek discovery of certain documents (listed *infra*) submitted to the International Trade Commission (hereinafter ITC) by American manufacturers, purchasers or importers of spun acrylic yarn and documents originating with the ITC during Investigations No. 731–TA–1 (Final) and 731–TA–2 (Final with respect to spun acrylic yarns from Japan and Italy.

By cross-motion for a protective order defendant opposes access for plaintiffs to these documents on the grounds that the ITC has promised confidentiality to firms submitting business data, that release of this information would seriously hamper the operations of the ITC, and that plaintiffs have not evidenced a need for the information in the documents. In support of its position, defendant has submitted the affidavit of E. William Fry, Director of Investigations for the ITC, to the effect that a promise of confidentiality is given to each supplier of sensitive business information and assurances that this information will not be released voluntarily affect the willingness of sources of information to submit the data required by the ITC making valid determinations of material injury. Defendant moves that if this court permits discovery of the documents in question, the identity of the suppliers of the information be withheld by coding the names of responders to the questionnaires and those on other documents.

American Yarn Spinners Association, Intervenor (hereinafter AYSA), also opposes plaintiffs' motions, on the additional grounds that it is not clear that the documents in question are properly part of the record for purposes of judicial review and that the information was submitted to the ITC only on the express assurance that such information would be seen solely by the staff and members of the Commission.

Taking each of these arguments and weighing them against plaintiffs' right to know brings this court to the conclusion that the requested documents should be disclosed. It is where the government invokes the executive privilege that the plaintiff must show a compelling need which outweighs the government's interest in protecting the confidentiality of communications among members of an agency's or commission's staff. *See Asahi Chemical Industry Co.* v. *United States*, 1 CIT —, Slip Op. 80–5 (Nov. 20, 1980) and cases cited therein. In cases in which a plaintiff was permitted full, or limited, disclosure of business information received by the ITC under a pledge of confidentiality, no requirement to demonstrate a compelling need was placed on it. *Connors Steel Co.* v. *United States*, 85 Cust. Ct. 112, C.R.D. 80–9 (1980); *Atlantic Sugar Ltd., et al.* v. *United States*, 85 Cust. Ct. 114, C.R.D. 80–10 (1980).

The promise of the ITC that the information would be kept confidential was not and could not have been absolute, as it must appreciate that all documents submitted during and arising from an investigation would be at least potentially reviewable by this court, its staff and the Department of Justice attorneys involved in the judicial review of the ITC's findings and the conclusions drawn therefrom. We find the statement of the ITC with respect to confidentiality less than a guarantee or even an implication that the information disclosed would be safeguarded from disclosure, as evidenced in its statement in its cover sheet to the questionnaire sent to purchasers in these investigations:

> The commercial and financial data furnished in response to sections I through IV that reveal the individual operations of your firm, will be treated as confidential by the Commission to the extent such data is not otherwise available to the public and will not be disclosed except as may be required by law. The confidential information supplied by you in this questionnaire, or in connection therewith, will not be published in a manner that will reveal the individual operations of your firm.
>
> Information submitted to or gathered by the Commission in conjunction with this proceeding under section 201(a) of the Antidumping Act may be subject, after January 1, 1980, to new antidumping provisions set forth in title VII which title would be the Tariff Act of 1930 as amended by the Trade Agreements Act of 1979 (see enclosed notice).

As to AYSA's contention that it is not clear whether the documents in question are properly part of the record for purposes of judicial review, it has not specified which of the documents forwarded by the ITC are to be deemed not judicially reviewable and the grounds or reasons for such a conclusion. Absent specific reasons for contesting

the ITC's determination that the documents are properly part of the record before this court, we shall not conclude that any of them should not be made available to plaintiffs on that ground.

Turning next to defendant's request that the names of the suppliers of information be coded to protect the confidentiality of the sensitive trade information provided by manufacturers, purchasers and importers, this court concludes as follows:

The documents have been examined in camera and it has been concluded, based on the fact that none of the information contained therein is more recent than September, 1979 with most of the information adduced dating back to 1978 or earlier, that any sensitivity previously possessed by this data has become *de minimis*. Balanced against plaintiffs' right to evaluate the factors weighed by the ITC in arriving at its determination of injury, this court is of the opinion that limited disclosure should be permitted in all matters that are not sensitive, subject to the guidelines established in *Connors Steel Co.* v. *United States*, *supra*, and *Atlantic Sugar Ltd., et al.* v. *United States*, *supra*.

For the above reasons, it is

ORDERED, that the plaintiffs' motions to compel discovery be be granted, subject to the following terms:

1. The subject materials, Documents 1 and 9 through 117 listed on List No. 2, Confidential Documents Transmitted to the U.S. Customs Court [now the U.S. Court of International Trade] shall be made available to plaintiffs' counsel within 10 days of the entry of this order.

2. Plaintiffs' counsel may disclose the material only to its attorneys and office personnel working on this litigation.

3. Counsel for plaintiffs and their immediate office personnel shall neither disclose nor use this confidential information for purposes other than this litigation or any remand or appeal of this matter.

4. If, in the opinion of counsel for any party, it becomes necessary to consult with experts independent of the industry involved for purposes of evaluating the confidential information, such experts shall agree not to disclose the confidential information to anyone other than to the counsel who consulted with them or to that counsel's office personnel, and then for purposes of this litigation only, any expert so consulted shall first sign a statement submitting himself or herself to the jurisdiction of the U.S. Court of International Trade and such reasonable sanctions as

this court may deem appropriate in the event of a breach of the conditions of this order.

5. In no event shall disclosure of confidential information be made to in-house counsel or other representatives, agents, employees or servants of plaintiffs or the interested parties.

6. Counsel for plaintiffs shall maintain a record of any and all copies of confidential information made, to whom they were provided and when they are returned. All such copies shall be clearly marked as containing confidential information and that they are to be returned at the conclusion of this litigation.

7. Any documents, including briefs and memoranda, containing any of the confidential information subject to this order, which are filed with the court in this case or used for any other purpose, shall be conspicuously marked as containing information which is not to be disclosed to the public and arrangements shall be made with the clerk of this court to retain such documents under seal, permitting access only to the court, court personnel authorized by the court to have access, and counsel for the parties. Copies of all the foregoing documents, but with the confidential information deleted, shall be filed with the court at the same time that the documents containing the confidential information are filed.

8. Any briefs or memoranda containing confidential information shall be served on the other parties in a wrapper conspicuously marked on the front "Confidential—to be opened only by attorneys handling this case," and shall be accompanied by a separate copy from which the confidential information has been deleted.

9. On the conclusion of this litigation and any appeal or remand of this matter, counsel for plaintiffs and the interested parties shall [a] return all copies of the confidential documents obtained under this order and the record required to be maintained under paragraph 6 of this order, and [b] destroy all other documents (including documents held by persons authorized under this order to have access thereto) containing the confidential information.

10. Any reference to plaintiffs' counsel herein shall include any other interested party who may subsequently be granted access to such documents under protective order.

Defendant's cross-motion, to the extent that it seeks relief inconsistent with this order, is DENIED.

(Slip Op. 81–44)

ZENITH RADIO CORPORATION, PLAINTIFF *v.* UNITED STATES, DEFENDANT

Court No. 80–5–00861

Order

(Dated May 13, 1981)

MALETZ, *Judge*: Upon consideration of plaintiff's motion to compel defendant to respond to plaintiff's first interrogatories, plaintiff's motion to compel defendant to respond to plaintiff's first request for production of documents, and defendant's opposition to those motions, and upon consideration of defendant's motion to compel plaintiff to respond to defendant's first interrogatories, defendant's motion to compel plaintiff to respond to defendant's first request for production of documents, and plaintiff's opposition to those motions, and upon all other papers and proceedings, after oral argument, the Court makes the following rulings:

I. On Plaintiff's Motion To Compel

A. Documents relating to investigation into possible violations of 19 U.S.C. 1592:

(1) Within 30 days, defendant shall make available, subject to the protective provisions contained in Part IV of this order, the documents covered by plaintiff's first request for production of documents concerning Sears, Montgomery Ward, and White Stores.

(2) Plaintiff will make application within 15 days to the United States District Court for the Eastern District of Virginia for an order modifying that court's protective order entered on April 23, 1980, in *In Re 1978 Grand Jury Proceedings J. C. Penney Company, Inc.*, and authorizing the defendant to make available to plaintiff's counsel for use in this judicial proceeding, subject to the protective provisions of Part IV of this Order, all documents in the defendant's possession which are at present subject to the aforesaid district court's order of April 23, 1980.

(3) Acting Commissioner Archey's claim of privilege for the remaining penalty documents is denied without prejudice on the ground that the privilege has not been properly claimed.

(4) Acting Commissioner Archey is allowed 30 days within which to file a proper claim of privilege for each of such penalty documents and to transmit to the court within that time for

examination by the court in camera each document for which privilege is claimed.

B. Other documents with respect to which defendant has claimed a privilege:

(1)Defendant shall transmit to the court within 15 days for examination by the court in camera the two in camera affidavits referred to in the affidavit of Admiral Bobby Inman, the Acting Director of the Central Intelligence Agency.

(2) The State Department documents for which a claim of privilege has been made by the Secretary of State shall be transmitted to the court within 15 days for examination by the court in camera.

(3) The Special Trade Representative documents for which a claim of privilege has been made shall be transmitted to the court within 15 days for examination by the court in camera.

C. Presidential papers: Plaintiff's motion for discovery of the Presidential papers of Presidents Nixon, Ford, and Carter is denied without prejudice.

D. Other documents encompassed within plaintiff's first request for production of documents: Defendant shall within 30 days make available for discovery, pursuant to the protective provisions contained in Part IV of this Order, the remaining documents covered by plaintiff's first requests for discovery. Draft protest decisions shall be included among the documents thus made available.

E. Plaintiff's first interrogatories: Defendant shall within 30 days supply answers to plaintiff's first interrogatories.

II. On Defendant's Motion To Compel

Defendant's motion to compel discovery pursuant to its first request for production of documents and its first interrogatories is allowed, with the exception of those interrogatories and documents covering communications between plaintiff and members of Congress. The court is of the view that at this stage the relevance of such communications seems borderline and the burden of complying unduly great. See 4 Moore's Federal Practice, pp. 26–135. Accordingly, the court sustains the objection of discovery of such communications without prejudice. With the foregoing exception, plaintiff shall respond to defendant's first interrogatories and request for production of documents within 30 days.

III. The Time Periods Specified Above May Not Be Extended Except for Good Cause Shown

IV. Protective Provisions

a. All of the information contained in the documents shall be deemed to be protected information. Should plaintiff's counsel believe that a particular document or item contained in a document is not entitled to confidential treatment, plaintiff's counsel shall not disclose the document or item and shall consult with defendant's counsel. If defendant's counsel agrees that the document or item does not appear to be confidential, plaintiff's counsel shall not disclose the document or item for three business days after receipt of the opinion of defendant's counsel so as to permit the individual or entity which submitted the document to apply for intervention for the purpose of filing an objection to disclosure with the Court. If such an application is filed, plaintiff's counsel shall not disclose the document or item until the Court rules upon the application and the objection. If defendant's counsel objects to, or fails to respond in a timely manner to plaintiff's counsel's request for disclosure of the document or the item, plaintiff's counsel shall not disclose the document or item until the differences between plaintiff's and defendant's counsel have been resolved by the Court.

b. Plaintiff's counsel may disclose the protected information to their legal associates and office personnel actively assisting in the litigation, but shall not disclose the protected information, directly or indirectly, to anyone else, except as provided by this Order.

c. If, in the opinion of plaintiff's counsel, it becomes necessary to consult with experts in evaluating the protected information, they shall, before any disclosure, notify and obtain the consent of defendant's counsel to disclosure to identified experts who shall agree not to disclose what they learn from the documents containing the protected information; if after seven (7) days following notification of defendant's counsel, counsel for the respective parties cannot agree upon the need for an expert or upon a suitable expert, plaintiff's counsel may submit the matter to the Court for resolution.

d. Any persons obtaining access to such protected information shall not make copies or reveal the contents of the documents containing the protected information, or use the protected information obtained for any purpose other than for the purpose of this litigation. Nothing in this Order shall preclude disclosure of the documents or the protected information contained in them to an individual or entity which was the source of the information.

e. Henceforth, should any party to this case file with the Court any document containing information which is protected by this Order, either (1) directly pursuant thereto, or (2) by incorporation through separate agreement between the parties, said party shall request the Clerk of the Court, or an employee of his office, to seal said document and to restrict access thereto to counsel for the parties and the Court personnel authorized access thereto by the Court.

f. The party filing such document as described in paragraph e, *supra*, will, unless there is no unprotected material which is reasonably segregable from the protected information, in addition to filing the number of such documents as prescribed by the Rules of the United States Court of International Trade, file an additional copy of the document, with the protected information deleted, for inclusion in that part of the Court file to which the general public has access.

g. Any party filing a document containing protected information shall indicate conspicuously thereon that the document contains information protected by a protective order.

h. Any party filing a copy of a document, with protected information deleted from said copy, in accordance with paragraph f, *supra*, shall indicate conspicuously on said copy that certain protected information has been deleted therefrom and where such deletions have been made on the copy.

i. Should a request for the sealing of a document, as described in paragraph e, *supra*, be made of the Clerk of the Court or of an employee of his office, such request shall be honored.

j. Upon conclusion of this litigation, Mr. Ikenson and Mr. Curtis shall return to defendant's counsel all documents, then in Mr. Ikenson's and Mr. Curtis' possession, containing protected information and any copies made of such documents, including any documents or copies held by persons authorized under paragraphs a and b, *supra*, to have access thereto, except for copies which contain work notes of counsel for plaintiff or other authorized persons. These latter documents shall be destroyed. Mr. Ikenson may retain one copy of all briefs and other documents filed by or with the Court which contain protected information.

k. Nothing in this Order shall preclude the parties from seeking such further orders of the Court as may be necessary to provide for further sealing and/or opening for public inspection of any documents or other things covered by this Order.

(Slip Op. 81–45)

AMERICAN AIR PARCEL FORWARDING COMPANY, LTD., A HONG KONG CORPORATION, PLAINTIFF *v.* UNITED STATES, DEFENDANT

Court No. 81–4–00428

Memorandum and Order on Plaintiff's Motion for a Preliminary Injunction

[Plaintiff's motion granted.]

(Dated May 15, 1981)

Richard A. Kulics, Esq., attorney for plaintiff.

Goodman, Miller & Miller, Esqs., of counsel by: *Jonathan Miller*, Esq., for the plaintiff.

Thomas S. Martin, Acting Assistant Attorney General, for the defendant by *Joseph I. Liebman*, Esq., Attorney in Charge, International Trade Field Office, Commercial Litigation Branch and *Susan L. Handler-Menahem*, Esq., of counsel.

RE, *Chief Judge:* Plaintiff, a foreign freight forwarder, moves this court for an order, enjoining the defendant, through its agent, the United States Customs Service, from (1) continuing the denial, by the District Director of Customs at the Port of Detroit, of plaintiff's "immediate delivery privilege", and (2) refusing to accept, for the benefit of plaintiff, the filing of entry documentation with uncertified checks, during the pendency of this action.

Plaintiff's motion for a preliminary injunction under Rule 65 was brought on by an Order to Show Cause issued on April 20, 1981. The court heard oral argument on the motion by a telephone conference call on April 22, 1981.

On April 27, 1981, the court granted plaintiff's motion for a preliminary injuction. This opinion incorporates that order, and sets forth the facts and reasons upon which the requested relief was granted.

Plaintiff is a freight consolidator with its principal place of business in Hong Kong. Plaintiff consolidates freight owned by various shippers for delivery to specific consignees in the United States. In importing merchandise, plaintiff prepares a consolidated entry, enters the goods, pays the duty, and then, through the use of common carriers such as United Parcel Service, delivers the goods to the ultimate consignee. As a course of business plaintiff posts single entry bonds to indemnify the Customs Service for any loss of revenue.

Plaintiff alleges that, while "it must ordinarily pay duties on entered merchandise within ten working days", it does not receive those monies until twenty-nine days later. Plaintiff recoups the monies by shipping the goods C.O.D. to the consignee.

Plaintiff routinely imports merchandise each week through the Port of Detroit and pays duty on the merchandise by uncertified

check. Plaintiff received a shipment on March 27 and March 30, 1981, on which duties were due on April 10 and April 13, 1981, respectively. Plaintiff claims that several days prior to April 10, 1981, the import control officer in Detroit stated that, beginning with the April 10 entry, plaintiff would have to pay the duty on that and all future entries by certified check. Plaintiff alleges the reason for the Customs Service's action was that certain uncertified checks issued the prior year had been dishonored. The defendant stated that it erred in continuing to accept uncertified checks and advised plaintiff that it would now require plaintiff's checks to be certified.

Plaintiff questioned the import control officer on the applicability of Customs Regulation 24.1(a)(3). This regulation authorizes an importer to present uncertified checks when the revenue is protected by the posting of a single entry bond for the full value of the duties owing on the shipment. Plaintiff alleges that the import control officer responded by stating that the decision was final, and that plaintiff could challenge the decision by submitting an entry with an uncertified check, having it rejected, and then filing a protest.

Plaintiff filed its entries on April 10 and April 13, 1981, with uncertified checks, both of which were rejected. On April 6, 1981, plaintiff received a letter from the acting District Director stating that certified checks would be required with all plaintiff's entries, and that plaintiff's immediate delivery privileges were suspended.

The parties raise basic questions pertaining to the jurisdiction of the court, the validity of the plaintiff's cause of action, and the "equity jurisdiction" of the court.

The court's authority to grant the requested relief presents the threshold question of whether the action is within its subject matter jurisdiction. Subject matter jurisdiction is the power of a court to hear and determine cases of the general class to which the particular proceeding belongs. *See Murrell* v. *Stock Growers' National Bank*, 74 F. 2d 827, 831 (10th Cir. 1934), and cases cited therein. The subject matter jurisdiction of the Court of International Trade, as established by the Customs Courts Act of 1980, encompasses all "civil actions arising out of import transactions and the Federal statutes affecting international trade." 126 Cong. Rec. H9340 (daily ed. Sept. 22, 1980) (remarks of Rep. Volkmer). Upon the facts recited, it is clear that plaintiff's case comes within the general class of cases over which this court has subject matter jurisdiction.

Jurisdiction, the power of this court to determine the case presented for decision, exists by virtue of the statutory provisions of the Customs Courts Act of 1980. More specifically, this case comes within the broad "residual grant of jurisdictional authority" of this court as described in 28 U.S.C. § 1581(i). H.R. Rep. No. 1235, 96th Cong. 2d

Sess. 47 (1980). In particular, paragraphs (i) (1) and (4) confer jurisdiction over any civil action "that arises out of any law of the United States providing for—

"(1) revenue from imports or tonnage;

* * * * * * *

'(4) administration and enforcement with respect to matters referred to in paragraphs (1)–(3) of this subsection * * *"

This court's jurisdiction over plaintiff's cause of action "arises out of [a] law of the United States", namely, 19 U.S.C. § 1648, and the Customs Service's administration and enforcement of its regulations. See 19 CFR §§ 24.1(a)(3) and 142.13(a). These regulations authorize customs officers to receive uncertified checks in payment of duties upon the filing of an entry bond, and to require the deposit of estimated duties and the filing of entry summary documentation before release of the goods if the importer "has failed repeatedly to file entry summary documentation without justification".

In several cases since November 1, 1980, the effective date of the Customs Courts Act of 1980, this court has found subject matter jurisdiction to exist within the statutory language embodied in 28 U.S.C. §§ 1581(i) (1) and (4). *See generally, Heraeus-Amersil, Inc.* v. *United States*. 1 CIT—, Slip Op. 81–33 (April 24, 1981); *DiJub Leasing Corp.* v. *United States*, 1 CIT—, Slip Op. 80–9 (December 5, 1980); *Zenith Radio Corp.* v. *United States*, 1 CIT—, Slip Op. 80–10 (December 9, 1980).

Section 1581(i) was apparently drawn from 28 U.S.C. § 1331, the federal question jurisdictional provision with respect to United States district courts. Section 1581(i) may be said to accomplish, as to the Court of International Trade, the purpose served by § 1331 for the district courts.

Although the United States Court of International Trade may have subject matter jurisdiction, there remains the possibility that a particular complaint may not state a cause of action upon which relief may be granted.

This point is illustrated by the case of *Bell* v. *Hood*, 327 U.S. 678 (1945). In *Bell* v. *Hood*, the Supreme Court of the United States, holding that the subject matter jurisdiction of a court cannot be defeated by the "possibility" that plaintiff's allegations may fail to state grounds upon which the requested relief may be granted, observed:

> "[F]ailure to state a proper cause of action calls for a judgment on the merits and not a dismissal for want of [subject matter] jurisdiction. Whether the complaint states a cause of action on which relief could be granted is a question of law and just as issues of fact it must be decided after and not before the court

> has assured jurisdiction over the controversy. If the court does later exercise its jurisdiction to determine that the allegations in the complaint do not state a ground for relief, then dismissal of the case would be on the merits, not for want of jurisdiction." *Id*, at 682, citing *Swafford* v. *Templeton*, 185 U.S. 487, 493, 494; and *Binderup* v. *Pathe Exchange*, 263 U.S. 291, 305–8.

As was made clear in *Bush* v. *State Industries, Inc.*, 599 F. 2d 780, 784 (6th Cir. 1979), in determining the existence of subject matter jurisdiction, a court must examine the alleged claim to see if it "actually 'arises under' the Constitution or federal statutes and is not made solely for the purpose of obtaining jurisdiction". If the case "arises under" the Constitution or the federal statutes, the existence of subject matter jurisdiction is not to be confused with ultimate success on the merits after trial.

The crucial question that the court must decide in each case is whether plaintiff's complaint has "any legal substance," in coming within the subject matter jurisdiction of the court. *Bush*, at 784–785. The failure to state a cause of action upon which relief can be granted is not relevant to the court's determination of the existence of its subject matter jurisdiction. *Bush*, at 785. The court must assume or exercise its jurisdiction in order to determine whether or not the complaint states a cause of action on which it may grant relief. *Bell*, at 682.

Jurisdiction, the power to decide a case presented for adjudication, should not be confused with a court's so-called "equity jurisdiction." When a court has jurisdiction over the subject matter and the parties, it has the power to decide the case, and "equity jurisdiction" can only refer to its authority and discretion to grant equitable relief. The words refer to those types or classes of cases formerly heard by courts of equity, as distinguished from the ordinary courts of law. In view of the merger of law and equity, the courts may grant any proper relief whether formerly denominated legal or equitable. Hence, to say that a court has "equity jurisdiction" is merely to say that it is authorized to exercise those equitable powers formerly devised or exercised by courts of equity. As a practical matter, it implies that a court is authorized to grant or withhold any of the equitable remedies.

On the court's authority to grant an equitable remedy, it must be noted that the general powers of the federal courts, when sitting as courts of equity, can only be exercised in cases within their subject matter jurisdiction as defined by Congress. *Sprague* v. *Ticonic Bank*, 307 U.S. 161 (1939); *Mason* v. *United States*, 260 U.S. 545 (1923). By the Customs Courts Act of 1980, Congress has clearly defined this court's subject matter jurisdiction and remedial powers. Congress has thereby conferred upon this court the statutory authority and

power to grant the equitable relief requested. Since the court is expressly authorized to grant an equitable remedy, it may grant plaintiff the requested relief. 28 U.S.C. § 1585; 28 U.S.C. § 2643(c)(1). Therefore, since the court has jurisdiction, there is no question as to its authority or power to do equity in the case at bar.

In enacting the Customs Courts Act of 1980, Congress indicated that the United States Court of International Trade "is to be guided by the same factors utilized by a federal district court when it considers a request for a preliminary * * * injunction." H.R. Rep. No. 1235, 96th Cong., 2d Sess. 61 (1980). The four factors most generally considered were applied by this court in the *DiJub Leasing Corp.*, and *Zenith Radio Corp.* cases. *See Washington Metropolitan Area Transit Commission* v. *Holiday Tours, Inc.*, 559 F. 2d 841 (D.C. Cir. 1977), and *Virginia Petroleum Jobbers Association* v. *F.P.C.*, 259 F. 2d 921 (D.C. Cir. 1958). *See also A. O. Smith Corp. et al.* v. *F.T.C.*, 530 F. 2d 515 (3d Cir. 1976).

More recently, the relevant factors were succinctly set forth by the United States Court of Customs and Patent Appeals in *S. J. Stile Associates Ltd.* v. *Dennis Snyder*, 67 CCPA—, C.A.D. 1261, — F, 2d — (1981): "(1) a threat of immediate irreparable harm; (2) that the public interest would be better served by issuing than by denying the injunction; (3) a likelihood of success on the merits; and (4) that the balance of hardship on the parties favored [plaintiff]".

It is not questioned that a request for a preliminary injunction is of an extraordinary nature which should be granted sparingly, *Dorfmann* v. *Boozer*, 414 F. 2d 1168, 1173 (D.C. Cir. 1969). Indeed, it has been said that it should be granted only upon a clear showing that the movant is entitled to the requested relief. *Flintkote Co.* v. *Blumenthal*, 469 F. Supp. 115, 125–126 (N.D.N.Y. 1979), *aff'd*, 596 F. 2d 51 (2d Cir. 1979). Although plaintiff bears the burden of persuasion, and a heavy burden of producing evidence, the applicable case law does not require that plaintiff sustain that high burden of proof as to each of the four factors. *Washington Metropolitan Area Transit Commission* v. *Holiday Tours, Inc.*, and *Virginia Petroleum Jobbers Association* v. *F.P.C.*, *supra*. Rather, the "balance-of-hardship" test, referred to in *S. J. Stile Associates Ltd.*, *supra*, permits the court to exercise a sound discretion and flexibility in the interaction of the four factors in granting or denying the request for interlocutory injunctive relief.

In *Holiday Tours*, the Court of Appeals for the District of Columbia refined its holding in the *Virginia Petroleum Jobbers* case. In so doing, Judge Leventhal stated that the court was following the established practice in other courts by moving "away from a standard incorporating a wooden 'probability' requirement and toward an analysis

under which the necessary showing on the merits is governed by the balance of equities as revealed through an examination of the other three factors". *Holiday Tours*, at 844. The court relied upon the "leading case" from the Second Circuit, *Hamilton Watch Co.* v. *Benrus Watch Co.*, 206 F. 2d 738, 740 (2d Cir. 1953), which explained:

> "To justify a temporary injunction it is not necessary that the plaintiff's right to a final decision, after a trial, be absolutely certain, wholly without doubt; if the other elements are present (i.e., the balance of hardships tips decidedly toward plaintiff), it will ordinarily be enough that the plaintiff has raised questions going to the merits so serious, substantial, difficult and doubtful, as to make them a fair ground for litigation and thus for more deliberate investigation."

Holiday Tours, at 844. The court also quoted from a more recent Second Circuit decision, *Charlie's Girls, Inc.* v. *Revlon, Inc.*, 483 F. 2d 953, 954 (2d Cir. 1973) (per curiam), which phrased the test as follows:

> "One moving for a preliminary injunction assumes the burden of demonstrating either a combination of probable success and the possibility of irreparable injury or that serious questions are raised and the balance of hardships tips sharply in his favor."

Summarizing for the court in *Holiday Tours*, Judge Leventhal wrote:

> "We believe that this approach is entirely consistent with the purpose of granting interim injunctive relief, whether by preliminary injunction or by stay pending appeal. Generally, such relief is preventative, or protective; it seeks to maintain the status quo pending a final determination of the merits of the suit. An order maintaining the status quo is appropriate when a serious legal question is presented, when little if any harm will befall other interested persons or the public and when denial of the order would inflict irreparable injury on the movant. There is substantial equity, and need for judicial protection, whether or not movant has shown a mathematical probability or success."

In the recent case of *Blackwelder Furniture Co.* v. *Seilig Manufacturing Co.*, 550 F. 2d 189 (4th Cir. 1977), the Fourth Circuit discussed in great depth the balance-of-hardship test. Initially, the court must balance "the 'likelihood' of irreparable harm to the plaintiff against the 'likelihood' of harm to the defendant". *Blackwelder*, at 195. There is a correlation between the likelihood of success on the merits, and the probability of irreparable injury without the issuance of the preliminary injunction. The courts utilize a sliding scale. For example, in *Telvest, Inc.* v. *Bradshaw*, 618 F. 2d 1029, 1032–1033, the Court of Appeals for the 4th Circuit indicated:

> "If the harm to the plaintiff greatly outweights the harm to the defendant, then enough of a showing has been made to permit the issuance of an injunction, and plaintiff need not show a likeli-

> hood of success on the merits, for a grave or serious question is sufficient. But as the harm to the plaintiff decreases, when balanced against the harm to the defendant, the likelihood of success on the merits becomes important."

Thus, "[t]he importance of probability of success increases as the probability of irreparable injury diminishes, . . . and where the latter may be characterized as simply 'possible' the former can be decisive". *Blackwelder*, at 195. These factors, albeit significant, must be considered together with the potential harm to the public interest by the granting or denial of injunctive relief.

In *Blackwelder*, the court stated that "[t]he balance of hardship test correctly emphasizes that, where *serious* issues are before the court, it is a sound idea to maintain the *status quo ante litem*, provided that it can be done without imposing too excessive an interim burden upon the defendant". [Emphasis in original.] *Blackwelder*, at 194–195. See also *Hamilton Watch Co*, at 740. As may be noted, therefore, the balance of hardship test is the proper standard for the granting or withholding of interlocutory injunctive relief.

In considering a request for a preliminary injunction, this court will consider the four factors set forth in *S. J. Stile Associates Ltd., supra*, and will ascribe to each factor its proper weight. While considering the public interest in all cases, the critical factors are the probability of irreparable injury to the movant should the equitable relief be withheld, and the likelihood of harm to the opposing party if the court were to grant the interlocutory injunction. Although the extraordinary remedy of a preliminary injunction is not available unless the moving party's burden of persuasion is met as to all four factors, the showing of likelihood of success on the merits is in direct proportion to the severity of the injury the moving party will sustain without injunctive relief, i.e., the greater the hardship the lesser the showing.

In the case at bar, the court has carefully reviewed plaintiff's moving papers and the record to determine if there is a sufficient showing of irreparable injury to plaintiff without the issuance of the preliminary injunction. Plaintiff alleges that it predicates its business operations on processing imported merchandise through Customs under an immediate delivery privilege. Upon release of the goods, plaintiff immediately ships them C.O.D. by common carrier to the ultimate consignee. Under this arrangement, plaintiff must await reimbursement for payment of any duties from the common carrier. Payment is often in the form of uncertified checks from the ultimate consignees which must await bank clearance for ultimate collection by plaintiff. Although the court will not comment upon the method by which plaintiff conducts its business, it is aware of the possibility of irreparable harm if plaintiff's immediate delivery privileges are

revoked. The revocation can cause significant disruption of plaintiff's business operations, as well as further delays in its collection process.

Plaintiff has raised serious questions as to whether it "has failed repeatedly . . . without justification", under the terms of 19 CFR § 142.13, to file the proper entery documentation with Customs to warrant revocation of its immediate delivery privileges. Plaintiff alleges that for the past ten years, save one instance in April, 1980, it has complied with the applicable Customs regulations for immediate delivery privileges, and has not made repeated untimely filings. Furthermore, plaintiff contends that the two entries in question do not constitute a repeated failure to file timely entry documentation, and that, in any event, it had adequate justification.

Plaintiff also raises important questions whether it has complied with the requirements of 19 CFR § 24.1(a)(3), by payment of duties with an uncertified check secured by an entry bond or other bond, and whether that regulation permits plaintiff to pay liquidated as well as estimated duties by uncertified check. Plaintiff maintains that the rejection of its entries of April 10 and April 13, 1981, because of the proffered payment of estimated duties by uncertified check, is illegal and an abuse of discretion in light of 19 U.S.C. § 1648 and the applicable regulations.

Plaintiff, moreover, asserts that the defendant's revenue from estimated duties is clearly protected by virtue of its "posting of a single entry bond for the full value of the shipment and the duties owing thereon". In a footnote in its memorandum in opposition to plaintiff's motion for a preliminary injunction, the defendant has responded that "an entry bond does not protect the revenue insofar as estimated duties are concerned as that bond only related to liquidated duties". This issue alone presents a serious, substantial and difficult question of law which bears heavily on the ultimate outcome of the case before the court. Therefore, it is clear that the legal issues raised by plaintiff are sufficient to be considered "fair ground for litigation and thus for more deliberate investigation". *Hamilton Watch Co.*, at 740.

Since, on balance, the equities are in plaintiff's favor as to the issuance of the preliminary injunction, the court must examine the potential interim burden on the defendant, and the public interest. Defendant states that it has a statutory obligation under 19 U.S.C. § 1484(a)(2)(c) to protect the revenue from imports "to the maximum extent practicable", and must accord equal treatment to "all consignees of imported merchandise". Defendant further contends that an immediate delivery permit is a privilege which allows plaintiff to obtain immediate release of goods without depositing estimated duties until ten days later. Defendant also asserts that plaintiff has

abused this privilege through the untimely filing of entry summary documentation without justification, including the deposit of any estimated duties, and that plaintiff should not be permitted to take advantage of that abuse. According to defendant, "continuance of this privilege would not protect the revenue of the United States".

Finally, defendant states that, since plaintiff cannot pay the estimated duties when its merchandise is released, it may be undercapitalized. It submits, therefore, that the public should not be expected to serve as plaintiff's creditor by subsidizing its business operation.

The court is not unmindful of defendant's argument. It is of the opinion, nevertheless, that, in granting plaintiff's request for relief, the public interest and the revenue derived from import duties can be adequately protected by security in an appropriate amount in accordance with Rule 65(c) of the Rules of the United States Court of International Trade. Under that rule, the security will protect defendant for "such costs and damages as may be incurred or suffered" if it is found to have been wrongfully enjoined by this court.

In sum, the court has considered the balance between the potential harm to the defendant by granting the requested relief, the possibility of irreparable injury to plaintiff were the relief to be denied, and the serious questions of law and fact that have been presented. Under all of the circumstances, the court has concluded that a preliminary injunction should issue, conditioned upon plaintiff giving security of $300,000, the amount suggested by defendant.

Subsequent to the issuance of the order of April 27, 1981, the court was advised that the parties reached an agreement on the posting of security. The terms agreed upon provide that plaintiff will continue to file single entry bonds, and will continue to maintain its term bond on file with the District Director of Customs, Detroit, Michigan, in the amount of $150,000. In addition, the agreement provides that plaintiff shall file a bond in the amount of $25,000 with the Court of International Trade, in accordance with Rule 65(c) of the Rules of this court, to secure defendant against the payment of any costs and damages that may be incurred by it pending the resolution of this action.

Decisions of the United States Court of International Trade

Abstracts

Abstracted Protest Decisions

DEPARTMENT OF THE TREASURY, *May 18, 1981.*

The following abstracts of decisions of the United States Court of International Trade at New York are published for the information and guidance of officers of the customs and others concerned. Although the decisions are not of sufficient general interest to print in full, the summary herein given will be of assistance to customs officials in easily locating cases and tracing important facts.

WILLIAM T. ARCHEY,
Acting Commissioner of Customs.

DECISION NUMBER	JUDGE & DATE OF DECISION	PLAINTIFF	COURT NO.	ASSESSED	HELD	BASIS	PORT OF ENTRY AND MERCHANDISE
				Par. or Item No. and Rate	Par. or Item No. and Rate		
P81/61	Re, C.J. May 11, 1981	Abitibi-Price Sales Corporation	79-9-01377	Item 252.67 0.08¢ per lb. +2%	Item 252.65 Free of duty	Agreed statement of facts	Champlain-Rouses Point (Ogdensburg) HBX Offset paper: paper of that class or kind chiefly used in U.S. in printing of newspapers pursuant to T.D. 56349

DECISION NUMBER	JUDGE & DATE OF DECISION	PLAINTIFF	COURT NO.	ASSESSED	HELD	BASIS	PORT OF ENTRY AND MERCHANDISE
				Par. or Item No. and Rate	Par. or Item No. and Rate		
P81/62	Re, C.J. May 11, 1981	General Instrument Corporation	79-5-00877	Item 687.10 5% with an allowance for duty-free treatment under item 807.00 of fabricated components of U.S. origin	Item A687.10 Free of duty under the Generalized system of Preferences	Agreed statement of facts	New York Lamps imported from a designated beneficiary country (Mexico)
P81/63	Re, C.J. May 11, 1981	K Mart Corporation	78-10-01639	Item 737.95 17.5%	Item A737.15 Free of duty pursuant to General Headnote 3(c) of TSUS, authorized by title V of Trade Act of 1974, and Ex. Order No. 11888 of 11/26/75	Agreed statement of facts	Longview (Portland, Oreg.) Models to a scale larger than 1 to 85 produced within Hong Kong
P81/64	Maletz, J. May 11, 1981	Spiegel, Inc.	77-11-04786	Item 737.80 22%	Item 725.50 8%	Amico, Inc. v. U.S. (C.A.D. 1214)	Chicago Music boxes

P81/65	Re, C.J. May 14, 1981	Abitibi-Price Sales Corporation	80-3-00539	Item 252.67 0.08¢ per lb. + 2%	Item 252.65 Free of duty	Agreed statement of facts	Champlain-Rouses Point (Ogdensburg) HBX Offset paper; paper of that class or kind chiefly used in U.S. in printing of newspapers pursuant to T.D. 56349
P81/66	Re, C.J. May 14, 1981	Abitibi-Price Sales Corporation	80-4-00695	Item 252.67 0.08¢ per lb. + 2%	Item 252.65 Free of duty	Agreed statement of facts	Champlain-Rouses Point (Ogdensburg) HBX Offset paper; paper of that class or kind chiefly used in U.S. in printing of newspapers pursuant to T.D. 56349
P81/67	Re, C.J. May 14, 1981	Carmichael International Service, a/c Manufacturers Discount Furniture & Bedding, Inc., et. al.	75-6-01511, etc.	Item 359.50 25¢ per lb. +30%	Item 346.60 15¢ per lb. +25%	Agreed statement of facts	Los Angeles Rayon patchwork velvet pile fabric, in the piece, of man-made fiber
P81/68	Re. C.J. May 14, 1981	Montgomery Ward & Co.	80-4-00578	Item 382.04 42.5%	Item 382.81 25¢ per lb. +27.5%	Agreed statement of facts	New York Ladies wearing apparel with nonornamental shoulder tucking
P81/39	Ford, J. May 14, 1981	Montgomery Ward & Co.	75-12-03108, etc.	Items 380.84 and 382.81 25¢ per lb. +27.5%	Item 376.56 16.5%	H. Rosenthal Co. v. U.S. (C.D. 4769, aff'd C.A.D. 1236)	Baltimore Jackets and snowsuits

Decision of the United States Court of International Trade

Abstracts

Abstracted Reappraisement Decisions

DECISION NUMBER	JUDGE & DATE OF DECISION	PLAINTIFF	COURT NO.	BASIS OF VALUATION	HELD VALUE	BASIS	PORT OF ENTRY AND MERCHANDISE
R81/168	Re, C.J. May 11, 1981	Amerisam Co., Inc.	74-12-03361, etc.	Export value	Appraised values shown on entry papers less additions included to reflect currency revaluation	C.B.S. Imports Corp. v. U.S. (C.D. 4739)	Los Angeles Miscellaneous articles
R81/169	Re, C.J. May 11, 1981	Arbor Import Corp.	73-1-00215, etc.	Export value	Appraised values shown on entry papers less additions included to reflect currency revaluation	C.B.S. Imports Corp. v. U.S. (C.D. 4739)	New York Miscellaneous articles
R81/170	Re, C.J. May 11, 1981	B & H Importing Corp.	73-4-00845, etc.	Export value	Appraised values shown on entry papers less additions included to reflect currency revaluation	C.B.S. Imports Corp. v. U.S. (C.D. 4739)	New York Miscellaneous articles

R81/171	Re, C.J. May 11, 1981	Brother Int'l Corp.	R66/12963, etc.	Export value (schedule A and B merchandise)	F.o.b. unit invoice prices plus 20% of difference between f.o.b. unit invoice prices and appraised values (schedule A merchandise) Appraised unit values less 7.5% net packed (schedule B merchandise)	Agreed statement of facts	Los Angeles Wooden consoles, etc. (schedule a merchandise); sewing machine heads, etc. (schedule B merchandise)
R81/172	Re, C.J. May 11, 1981	Frederick Atkins International	73-8-02393, etc.	Export value	Appraised values shown on entry papers less additions included to reflect currency revaluation	C.B.S. Imports Corp. v. U.S. (C.D. 4739)	New York Miscellaneous articles
R81/173	Re, C.J. May 11, 1981	The Jordan International Co.	77-10-04556, etc.	Export value	Established by Japanese trading company price lists without a 6% addition to such value	Agreed statement of facts	Philadelphia; Wilmington, N.C.; New Orleans; New Haven (Bridgeport) Hot-rolled, coldrolled and galvanized steel sheets and plates
R81/174	Re, C.J. May 11, 1981	Midland International Corp.	74-11-03180, etc.	Export value	Appraised values shown on entry papers less additions included to reflect currency revaluation	C.B.£. Imports Corp. v. U.S. (C.D. 4739)	Kansas City (St. Louis); New York; Los Angeles Miscellaneous articles

DECISION NUMBER	JUDGE & DATE OF DECISION	PLAINTIFF	COURT NO.	BASIS OF VALUATION	HELD VALUE	BASIS	PORT OF ENTRY AND MERCHANDISE
R81/175	Re C.J. May 11, 1981	Rugby International Corp.	73-3-00763, etc.	Export value	Appraised values shown on entry papers less additions included to reflect currency revaluation	C.B.S. Imports Corp. v. U.S. (C.D. 4739)	New York Miscellaneous articles
R81/176	Re, C.J. May 11, 1981	Sanyo Electric Inc.	74-10-02860, etc.	Export value	Appraised values shown on entry papers less additions included to reflect currency revaluation	C.B.S. Imports Corp. v. U.S. (C.D. 4739)	Los Angeles Electronic articles
R81/177	Re, C.J. May 12, 1981	Bronton Apparel Ltd.	74-5-01195, etc.	Export value	Appraised values shown on entry papers less additions included to reflect currency revaluation	C.B.S. Imports Corp. v. U.S. (C.D. 4739)	New York Wearing apparel, etc.
R81/178	Re, C.J. May 12, 1981	Brother Int'l Corp.	R65/2036, etc.	Export value (schedule A and B merchandise)	F.o.b. unit invoice prices plus 20% of difference between f.o.b. unit invoice prices and appraised values (schedule A merchandise) Appraised unit values less 7.5%, net packed (schedule B merchandise)	Agreed statement of facts	Philadelphia Wooden consoles, etc. (schedule A merchandise); sewing machines, e c. (schedule B merchandise)

R81/179	Re, C.J. May 12, 1981	WM. Filenes & Sons Co.	74-10-02853	Export value	Appraised values shown on entry papers less additions included to reflect currency revaluation	C.B.S. Imports Corp. v. U.S. (C.D. 4739)	Boston Miscellaneous articles
R81/180	Re, C.J. May 12, 1981	Mitsubishi International Corp.	74-6-01654	Export value	Appraised values shown on entry papers less additions included to reflect currency revaluation	C.B.S. Imports Corp. v. U.S. (C.D. 4739)	Portland, Oreg.; New York Miscellaneous articles
R81/181	Re, C.J. May 12, 1981	Starlight Trading Inc.	74-9-02677	Export value	Appraised values shown on entry papers less additions included to reflect currency revaluation	C.B.S. Imports Corp. v. U.S. (C.D. 4739)	Los Angeles; New York Miscellaneous articles
R81/182	Re, C.J. May 14, 1981	Charmilles Corp. of America	80-1-00168	United States value	Determined by adding to f.o.b. unit invoice price in Swiss francs converted to a dollar value at fixed rate of exchange as shown on special customs invoice in entry documents (the "claimed value"), 53% of difference between claimed value and appraised value	Agreed statement of facts	New York Machine tools and accessories and parts

DECISION NUMBER	JUDGE & DATE OF DECISION	PLAINTIFF	COURT NO.	BASIS OF VALUATION	HELD VALUE	BASIS	PORT OF ENTRY AND MERCHANDISE
R81/183	Re, C.J. May 14, 1981	Conti Rubber Products Inc.	78-1-00047, etc.	Foreign value	Appropriate claimed unit values (all in Deusche mark) listed to decision and judgment	Agreed statement of facts	New York Various automotive tires
R81/184	Re, C.J. May 14, 1981	Marubeni America Corp.	74-7-02001	Export value	Unit values found by appraising customs official, less ocean freight and marine insurance, and without additions to said values for currency fluctuation	C.B.S. Imports Corp. v. U.S. (C.D. 4739)	New York Radio receivers and parts

R81/185	Re, C.J. May 14, 1981	Marubeni America Corp.	75-11-02869, etc.	Export value	Unit values found by appraising customs official, less ocean freight and marine insurance, and without additions to said values for currency fluctuation	C.B.S. Imports Corp. v. U.S. (C.D. 4739)	New York Miscellaneous articles
R81/186	Re, C.J. May 14, 1981	Rachelle Laboratories, Inc.	76-5-01060	American selling price	$24 per kilo, net packed	Agreed statement of facts	New York Procaine penicillin
R81/187	Boe, J. May 14, 1981	Conti Rubber Products Inc.	74-7-01782	Foreign value	Appropriate claimed unit values (all in Deutsche mark) listed on schedule attached to decision and judgment	Agreed statement of facts	New Orleans Various automotive tires

International Trade Commission Notices

Investigations by the United States International Trade Commission

DEPARTMENT OF THE TREASURY, MAY 28, 1981.

The appended notices relating to investigations by the United States International Trade Commission are published for the information of Customs Officers and others concerned.

R. E. CHASEN,
Commissioner of Customs.

In the Matter of
CERTAIN THERMAL CONDUCTIVITY SENSING GEM TESTERS AND COMPONENTS THEREOF } Investigation No. 337-TA-100

Notice of Investigation

AGENCY: U.S. International Trade Commission.

ACTION: Institution of investigation pursuant to 19 U.S.C. 1337.

SUMMARY: Notice is hereby given that a complaint was filed with the U.S. International Trade Commission on April 13, 1981, and amended on May 6, 1981, under section 337 of the Tariff Act of 1930 (19 U.S.C. sec. 1337), on behalf of Ceres Electronics Corp., at 411 Waverly Oaks Park, Waltham, Mass. 02154, Adams-Smith, Inc., at P.O. Box 130, 34 Tower Street, Hudson, Mass. 01749, and MSB Industries, Inc., at 1180 Avenue of the Americas, New York, N.Y. 10036. The amended complaint (hereinafter referred to as the complaint) alleges unfair methods of competition and unfair acts in the importation of certain thermal conductivity sensing gem testers and components thereof into the United States, or in their sale, by reason of alleged (1) infringement by said thermal conductivity sensing gem testers of claims 21, 22, and 26 of U.S. Letters Patent 4,255,962, (2) infringement of claims 1, 2, 23, and 24 of U.S. Letters Patent 4,255,962 in the operation of said theremal conductivity sensing gem testers and the inducement of and/or contribution to said infringement, and (3) false advertising. The complaint further

alleges that the effect or tendency of the unfair methods of competition and unfair acts is to destroy or substantially injure an industry, efficiently and economically operated, in the United States.

The complainant requests that, after a full investigation, the Commission issue an exclusion order and a cease and desist order.

AUTHORITY: The authority for institution of this investigation is contained in section 337 of the Tariff Act of 1930 (19 U.S.C sec. 1337) and in section 210.12 of the Commission's Rules of Practice and Procedure.

SCOPE OF THE INVESTIGATION: Having considered the complaint, the U.S. International Trade Commission on May 13, 1981, ordered that—

(1) Pursuant to subsection (b) of section 337 of the Tariff Act of 1930, an investigation be instituted to determine whether there is a violation of subsection (a) of section 337 in the unlawful importation of certain thermal conductivity sensing gem testers and components thereof into the United States, or in their sale, by reason of alleged (1) infringement by said thermal conductivity sensing gem testers of claims 21, 22, or 26 of U.S. Letters Patent 4,255,962, (2) infringement of claims 1, 2, 23, or 24 of U.S. Letters Patent 4,255,962 in the operation of said thermal conductivity sensing gem testers and the inducement of and/or contribution to said infringement, and (3) false advertising, the effect or tendency of which is to destroy or substantially injure an industry, efficiently and economically operated, in the United States;

(2) For the purpose of the investigation so instituted, the following are hereby named as parties upon which this notice of investigation shall be served:

(a) The complainants are—Ceres Electronics Corp., 411 Waverly Oaks Park, Waltham, Mass. 02154; Adams-Smith, Inc., P.O. Box 130, 34 Tower Street, Hudson, Mass. 01749; MSB Industries, Inc., 1180 Avenue of the Americas, New York, N.Y. 10036.

(b) The following respondents are alleged to infringe claims 1, 2, 21, 22, 23, 24, and 26 of U.S. Letters Patent 4,255,962 and to induce and/or contribute to the infringement of claims 1, 2, 23, and 24 of said patent and are the parties upon which the complaint is to be served: Presidium Diamonds Pte Ltd., P.O. Box 383, Benoni, Tvl., 1500, South Africa; Lien International Trading Pte Ltd., Suite 2104, Shaw Towers, Beach Road, Singapore, Singapore 0718; Gem Instruments Corp., P.O. Box 2147, 1735 Stewart Street, Santa Monica, Calif. 90406; Gemological Institute of America, P.O. Box 2110, 1660 Stewart Street, Santa Monica, Calif. 90406.

The latter two above-named respondents are also alleged to be engaged in false advertising.

(c) Although the complaint named as proposed respondents Rayner Optical Company Ltd., 17 Lorna Road, Hove, East Suffolk, England, BN3 3ET, and Gemological Instruments Ltd., St. Dunstan's House, Carey Lane, London, England EC2V 8AB, they are not so named in this investigation because they are not alleged to be involved in the importation of thermal conductivity sensing gem testers or components thereof which infringe the '962 patent.

(d) M. Brooke Murdock, Unfair Import Investigations Division, U.S. International Trade Commission, 701 E Street NW., Washington, D.C. 20436, shall be the Commission investigative attorney, a party to this investigation; and

(3) For the investigation so instituted, Donald K. Duvall, Chief Administrative Law Judge, U.S. International Trade Commission, 701 E Street NW., Washington, D.C. 20436, shall designate the presiding officer.

Responses must be submitted by the named respondents in accordance with section 210.21 of the Commission's Rules of Practice and Procedure (19 CFR 210.21). Pursuant to sections 201.16(d) and 210.21(b) of the rules, such responses will be considered by the Commission if received not later than 20 days after the date of service of the complaint. Extensions of time for submitting a response will not be granted unless good and sufficient cause therefor is shown.

Failure of a respondent to file a timely response to each allegation in the complaint and in this notice may be deemed to constitute a waiver of the right to appear and contest the allegations of the complaint and this notice, and to authorize the presiding officer and the Commission, without further notice to the respondent, to find the facts to be as alleged in the complaint and this notice and to enter both a recommended determination and a final determination containing such findings.

The complaint, except for any confidential information contained therein, is available for inspection during official working hours (8:45 a.m. to 5:15 p.m.) in the Office of the Secretary, U.S. International Trade Commission, 701 E Street NW., Washington, D.C. 20436, telephone 202–523–0161.

FOR FURTHER INFORMATION CONTACT: M. Brooke Murdock, Unfair Import Investigations Division, U.S. International Trade Commission, telephone 202–523–0113.

By order of the Commission.

Issued: May 15, 1981.

KENNETH R. MASON,
Secretary.

In the Matter of CERTAIN SCREW JACKS AND COMPONENTS THEREOF	Investigation No. 337–TA–98

Notice of Amendment of Notice of Investigation and Designation of the Investigation as "More Complicated"

AGENCY: U.S. International Trade Commission.

ACTION: Amendment of complaint to include an allegation of infringement of an additional patent and designation of the investigation as "more complicated."

SUMMARY: On May 18, 1981, the Commission determined to amend the notice of investigation to include infringement of U.S. Letters Patent 3,977,267 by respondents Seeburn Metal Products, Ltd., and General Motors Corp., as an alleged unfair act or unfair method of competition within the meaning of section 337 of the Tariff Act of 1930 (19 U.S.C. 13337).

On April 13, 1981, complainant Auto Specialities Manufacturing Co. filed a motion to amend the complaint and notice of investigation to include U.S. Letters Patent 3,977,267. The motion was opposed by respondents Seeburn Metal Products, Ltd., and General Motors Corp.

The original complaint in this investigation, which was instituted on February 11, 1981, alleged that screw jacks made by Seeburn infringed U.S. Letters Patent 3,862,577 (the '577 patent) because of a pinion gear contained in the imported screw jacks. The '267 patent, which the complainant now wishes to add allegedly covers another component of the screw jacks, the bottom gear.

On May 1, 1981, the Commission Administrative Law Judge, Judge Saxon, recommended that the Commission amend the notice to add the '267 patent and also declare this investigation "more complicated."

The Commission's Action and Order, and Memorandum Opinion in this matter is available for public inspection in the Office of the Secretary, U.S. International Trade Commission, 701 E Street NW., Washington, D.C. 20436, telephone 202–523–0161.

FOR FURTHER INFORMATION CONTACT: Jeffrey Neeley, Esq., Office of the General Counsel, U.S. International Trade Commission, 701 E Street NW., Washington, D.C. 20436, telephone 202–523–0359.

By order of the Commission.

Issued: May 19, 1981.

KENNETH R. MASON,
Secretary.

In the Matter of	
CERTAIN HOT AIR CORN POPPERS AND COMPONENTS THEREOF	Investigation No. 337-TA-101

Notice of Investigation

AGENCY: U.S. International Trade Commission.

ACTION: Institution of investigation pursuant to 19 U.S.C. section 1337.

SUMMARY: Notice is hereby given that a complaint was filed with the U.S. International Trade Commission on April 16, 1981, and amended April 30, 1981, and on May 13, 1981 under section 337 of the Tariff Act of 1930 (19 U.S.C. section 1337), on behalf of Wear-Ever Aluminum, Inc., 1089 Eastern Avenue, Chillicothe, Ohio 45601. The complaint alleges unfair methods of competition and unfair acts in the importation of certain hot air corn poppers into the United States, or in their sale, by reason of the alleged infringement by said hot air corn poppers of claims 1, 2, 3, and 5 of U.S. Letters Patent 4,178,843. The complaint further alleges that the effect or tendency of the unfair methods of competition and unfair acts is to destroy or substantially injure an industry, efficiently and economically operated, in the United States.

The complainant requests that, after a full investigation, the Commission issue an order excluding the articles in question from entry into the United States for the term of the patent, except under license.

AUTHORITY: The authority for institution of this investigation is contained in section 337 of the Tariff Act of 1930 and in section 210.12 of the Commission's Rules of Practice and Procedure.

SCOPE OF THE INVESTIGATION: Having considered the complaint, the U.S. International Trade Commission, on May 13, 1981, ordered that—

(1) Pursuant to subsection (b) of section 337 of the Tariff Act of 1930, an investigation be instituted to determine whether there is a violation of subsection (a) of section 337 in the unauthorized importation of certain hot air corn poppers and components thereof into the United States, or in their sale, by reason of the alleged infringement by said hot air corn poppers of claims 1, 2, 3, or 5 of U.S. Letters Patent 4,178,843, the effect or tendency of which is to destroy or substantially injure an industry, efficiently and economically operated, in the United States;

(2) For the purpose of this investigation so instituted, the following are hereby named as parties upon which this notice of investigation shall be served:

(a) The complainant is—Wear-Ever Aluminum, Inc., 1089 Eastern Avenue, Chillicothe, Ohio 45601.

(b) The respondents are the following persons, alleged to be in violation of section 337, and are parties upon whom the complaint is to be served: Yamada Electric Industries, Ltd., 1–30–1 Yahiro, Sumida-Kv, Tokyo, Japan 131; Chiap Hua, 30–32 Kung Zip Street, Kwai Chung N.T., Hong Kong; The West Bend Company, Inc., 400 W. Washington Street, West Bend, Wis. 53095; Sunbeam Corporation, 4600 W. Roosevelt Road, Chicago, Ill. 60650; Maxim Associates Corporation, 9131 Queens Boulevard, Elmhurst, N.Y. 11373; The Stop & Shop Companies, Inc., 393 D Street, Boston, Mass. 02101; K-Mart Corporation, 3100 W. Big Beaver Road, Troy, Mich. 48084.

(c) John Milo Bryant, Unfair Import Investigations Division, U.S. International Trade Commission, 701 E Street NW., Washington, D.C. 20436, shall be the Commission investigative attorney, a party to this investigation; and

(3) For the investigation so instituted, Donald K. Duvall, Chief Administrative Law Judge, U.S. International Trade Commission, 701 E Street NW., Washington, D.C. 20436, shall designate the presiding officer.

The phrase "and components thereof" has been added to paragraph (1) above on the basis of informal investigatory activities by the Commission which revealed that hot air corn poppers of the type alleged to infringe claims 1, 2, 3, and 5 of U.S. Letters Patent 4,178,843 can be imported in component parts as well as entirely assembled units.

Responses must be submitted by the named respondents in accordance with section 210.21 of the Commission's Rules of Practice and Procedure (19 CFR section 210.21), Pursuant to sections 201.16(d) and 210.21(b) of the rules, such responses will be considered by the Commission if received not later than 20 days after the date of service of the complaint. Extensions of time for submitting a response will not be granted unless good and sufficient cause therefore is shown.

Failure of a respondent to file a timely response to each allegation in the complaint and in this notice may be deemed to constitute a waiver of the right to appear and contest the allegations of the complaint and this notice, and to authorize the presiding officer and the Commission, without further notice to the respondent, to find the facts to be as alleged in the complaint and this notice and to enter both a recommended determination and a final determination containing such findings.

The complaint, except for any confidential information contained therein, is available for inspection during official working hours (8:45

a.m. to 5:15 p.m.) in the Office of the Secretary, U.S. International Trade Commission, 701 E Street NW., Washington, D.C. 20436. telephone 202–523–0161.

FOR FURTHER INFORMATION CONTACT: John Milo Bryant, Unfair Import Investigations Division, U.S. International Trade Commission, telephone 202–523–0419.

By order of the Commission.

Issued: May 19, 1981.

KENNETH R. MASON,
Secretary.

Index

U.S. Customs Service

Treasury Decisions:
- Foreign Currencies: Variances from Quarterly Rate; May 11–15, 1981 ---- 81–158
- Synopses of Drawback Decisions ---- 81–156
  - Steel sheet; galvanized steel sheet ---- 81–156–A
  - Sugar, hard refined ---- 81–156–C
  - Yarn, nylon ---- 81–156–D
  - Steel sheet, strip and blanks, galvanized ---- 81–156–E
  - Random access memory ---- 81–156–F
  - 3-amino-4-methoxy acetanilide ---- 81–156–G
  - Tabias acid ---- 81–156–B
  - Olefins ---- 81–156–H
  - N-heptaldehyde ---- 81–156–I
  - Pig lead and metallic antimony ---- 81–156–J
  - Sugar, hard refined ---- 81–156–K
  - Piano actions, keyboards, and hammers ---- 81–156–L
  - Sodium methoxide; N,N-dimethyl formamide ---- 81–156–M
  - Cold drawn seamless mechanical steel tubing ---- 81–156–N
  - Powdered polyvinyl chloride (PVC) resin ---- 81–156–O
  - Fluorspar ---- 81–156–P
  - Desmodur PU 1844 ---- 81–156–Q
  - Yoke assembly ---- 81–156–R
  - Castings and forgings ---- 81–156–S
  - Beta naphthol ---- 81–156–T
  - Cassette parts, plastic ---- 81–156–U
  - Steel coil and hot rolled steel coil ---- 81–156–V
  - Pipe tubes, plain end unfinished seamless ---- 81–156–W
  - Chloroacetaldehyde dimethyl acetal ---- 81–156–X
  - Automobile stampings ---- 81–156–Y
  - Silicon wafers raw ---- 81–156–Z
- Synopses of Drawback Decisions ---- 81–157
  - Steel, alloy ---- 81–157–A
  - Photographic and electronic parts, components and sub-assemblies ---- 81–157–B
  - Generator skids, metal ---- 81–157–C
  - Duplicating machine parts ---- 81–157–D
  - Steel sheet and strip in coil ---- 81–157–E
  - Tobacco, leaf ---- 81–157–F
  - Praseodymium oxide ---- 81–157–G
  - Data processing equipment ---- 81–157–H
  - Engines ---- 81–157–I
  - Valves, hoses, nipples, clips ---- 81–157–J

Treasury Decisions—Continued
Synopses of Drawback Decisions—Continued
Parts for wire drawing machines and annealers ... 81-157-K
Food dyes ... 81-157-L
Flurandrenolide ... 81-157-M
Yardage ... 81-157-N
Mercedes Benz Chassis ... 81-157-O
Piece goods ... 81-157-P
Electrodes, flux coated ... 81-157-Q
Components, electrical ... 81-157-R
Cigarette filter rods ... 81-157-S
Woven fabrics ... 81-157-T
Parts and components for television receivers ... 81-157-U
Steel, pipe-carbon ... 81-157-V
Lube oil concentrates ... 81-157-X
Engines, diesel ... 81-157-Y
Steel rod, specialty ... 81-157-Z
Customs Service Decisions:
Bonds: Cancellation of TIB When Photos Processed From Imported Film Have Been Destroyed ... 81-127
Classification:
Applicability of the U.S. Value as a Basis of Appraisement Where Merchandise is Freely Sold to Unrelated U.S. Purchasers ... 81-121
Various Valves Used in Hydraulic Systems ... 81-124
Qualified Authorization for Classification in Item 807.00, TSUS, of Certain Bra Straps Imported into the U.S. on an Aggregate Basis ... 81-129
Proper Tariff Classification of Animal Feed Wheat Gluten and Wheat Gluten for Human Consumption ... 81-133
CXL-2000, A Chemical Product from England ... 81-134
Description of Evidence Needed to Support Claim of Defective Merchandise ... 81-144
Mixture of Propane-Butane ... 81-145
Battery-Operated Metal Detector ... 81-147
Whether Silver Articles Created Between 1895 and 1915 are Properly Classified as Antiques ... 81-148
Drawback:
Substitution of Domestic Reconstituted Tobacco Scrap for Flue-cured Scrap Tobacco ... 81-131
Undershipment of Ordered Quantity of Merchandise Shipped Without Importer's Consent thus Entitling Importer to Relief Under 19 U.S.C. 1313(c) ... 31-141
Applicability of Drawback for Merchandise Used in an Assembly Operation to Manufacture an Article Under Drawback Conditions ... 81-142
Eligibility for Refund of Duty as Drawback on Cargo Containers Manufactured in the U.S. Wholly or Partly of Foreign Components ... 81-143
Timely Filing of Application For Futher Review of Protest; Retention of Records with Respect to Drawback Claims ... 81-146
Communications Satellites Stored in a Foregin-Trade Zone ... 81-150

Customs Service Decisions—Continued
Drawback and Refunds: Extension of Time Period for the Return to Customs Custody of Rejected Merchandise 81-138
Entry:
Applicability of Duty-Free Exemption Status to Articles Shipped to then Returned from the Virgin Islands 81-123
Separate Entry for Individual Invoices Involving One Shipment 81-140
Prohibited Entry of Certain Sculptures Owing to Copyright Infringement Pursuant to 17 U.S.C. 602 81-149
Export Value: Termination Payment Forms Part of Constructed Value of Imported Airport 81-126
Foreign Trade Zones: Several Issues Relating to Color Television Sets Manufactured in U.S.; Manufactured Abroad and Imported into the U.S 81-130
Licensing: U.S. Customs Service Employees Taking the Qualifying Examination for Customshouse Broker's License 81-135
Value:
Proper Application of Statutory United States Value as a Basis of Appraisement 81-122
Export: Inland Freight Charges Included in Appraised Export Value of Merchandise 81-128
Vessel:
Transportation, Use and Commingling of Fish Processing Supplies in Non-Coastwise-Qualified Vessels in Violation of 46 U.S.C. 883 81-125
Treatment of Lightering Vessels Carrying Alaska North Slope Crude Oil 81-132
Transshipment of Fish Taken on the High Seas by a Foreign-Flag Fishing Vessel 81-139
Vessel Repair:
Petition for Relief From Payment of Vessel Repair Duties 81-136
Petition for Remission of Duties Assessed on the Cost of Temporary Repairs to an American Vessel 81-137

DEPARTMENT OF THE TREASURY
U.S. CUSTOMS SERVICE
WASHINGTON, D.C. 20229

OFFICIAL BUSINESS
PENALTY FOR PRIVATE USE, $300

POSTAGE AND FEES PAID
DEPARTMENT OF THE TREASURY (CUSTOMS)
(TREAS. 552)

U.S.MAIL

U.S. GOVERNMENT PRINTING OFFICE : 1981

15/24

Customs Bulletin

Regulations, Rulings, Decisions, and Notices concerning Customs and related matters

and Decisions

of the United States Court of Customs and Patent Appeals and the United States Court of International Trade

Vol. 15 JUNE 17, 1981 No. 24

NEWARK PUBLIC LIBRARY
JUN 30 1981
U. S. GOVT. PUBS.
DEPOSITORY 376

This issue contains

T.D. 81–159 through 81–163
C.S.D. 81–151 through 81–160
Slip. Op. 81–46 and 81–47
Reap. Abstracts R81/188 through R81/210
International Trade Commission Notice

THE DEPARTMENT OF THE TREASURY
U.S. Customs Service

T 1.11/3:

NOTICE

The abstracts, rulings, and notices which are issued weekly by the U.S. Customs Service are subject to correction for typographical or other printing errors. Users may notify the U.S. Customs Service, Logistics Management Division, Washington, D.C. 20229, of any such errors in order that corrections may be made before the bound volumes are published.

For sale by the Superintendent of Documents, U.S. Government Printing Office, Washington, D.C. 20402. Price: $2.25 (single copy domestic); $2.85 (single copy foreign). Subscription price: $85.00 a year domestic; $106.25 a year foreign.

U.S. Customs Service

Treasury Decisions

(T.D. 81–159)

Bonds

Approval and discontinuance of consolidated aircraft bonds (air carrier blanket bonds), Customs Form 7605

The following consolidated aircraft bonds have been approved or discontinued as shown below. The symbol "D" indicates that the bond previously outstanding has been discontinued on the month, day, and year represented by the figures which follow. "PB" refers to a previous bond, dated as represented by the figures in parentheses immediately following, which has been discontinued. If the previous bond was in the name of a different company or if the surety was different, the information is shown in a footnote at the end of the list.

Dated: May 29, 1981.

Name of principal and surety	Date term commences	Date of approval	Filed with district director/area director/amount
Braniff Airways, Inc., d.b.a. Braniff International, World Headquarters, Braniff Blvd., Dallas/Fort Worth Airport, TX; Aetna Casualty & Surety Co. (PB 2/26/77) D 5/1/81 [1]	May 1, 1981	May 1, 1981	Dallas/Fort Worth, TX $200,000
The foregoing principal has been designated as a carrier of bonded merchandise.			
Department of International Affairs, General Administration of Civil Aviation of China, 477 Madison Ave., New York, NY; American Home Assurance Co.	Mar. 17, 1981	Apr. 14, 1981	J.F.K. Airport, NY $100,000
The foregoing prinicipal has not been designated as a carrier of bonded merchandise.			
Federal Express Corp., Box 30167, Memphis, TN; Safeco Ins. Co. of America.	Jan. 26, 1981	Mar. 20, 1981	New Orleans, LA $100,000
The foregoing principal has been designated a carrier of bonded merchandise.			
Iran National Airlines Corp., 345 Park Ave., New York, NY; National Union Fire Ins. Co. of Pittsburgh, PA D 12/26/79	Apr. 17, 1979	Apr. 23, 1979	J.F.K. Airport, NY $100,000

[1] Principal is Braniff Airways, Inc., d.b.a. Braniff International, and Braniff International Airways; Surety is Federal Ins. Co.

(BON-3-01)

MARILYN G. MORRISON,
Director,
Carriers, Drawback and Bonds Division.

(T.D. 81-160)

(19 CFR 101)

General Provisions

Amendments to the Customs regulations relating to the field organization of the Customs Service

AGENCY: U.S. Customs Service, Department of the Treasury.

ACTION: Final rule.

SUMMARY: This document: (1) changes the field organization of the Customs Service, by (a) consolidating the Houston and Galveston, Texas, Customs districts (Region VI) and consolidating the Customs ports of entry of Houston and Galveston in the new Houston-Galveston district and (b) transferring jurisdiction over Morris County, New Jersey, from Region III, Baltimore, Maryland, to Region II, New York, New York; and, (2) clarifies the geographical boundaries of the Port Arthur Customs port of entry (Region VI).

Consolidating the Customs districts will significantly reduce administrative salaries and expenses without impairing services to area businesses or to the general public. Consolidating the ports of entry will simplify vessel entry and clearance procedures and reduce overtime expenses and paperwork for all parties involved. The other changes merely conform the Customs Regulations to changes previously made.

EFFECTIVE DATE: 30 days from the date of publication in the Federal Register.

FOR FURTHER INFORMATION CONTACT: Renee DeAtley, Office of Inspection, U.S. Customs Service, 1301 Constitution Avenue, NW., Washington, D.C. 20229 (202-566-8157).

SUPPLEMENTARY INFORMATION:

Background

HOUSTON-GALVESTON, TEXAS

As part of a continuing program to obtain more efficient use of its personnel, facilities, and resources, and to provide better service to carriers, importers, and the public, the Customs Service published a notice of proposed rulemaking in the Federal Register on December 16, 1980 (45 FR 82665), proposing to consolidate: (1) the Houston, Galveston, and Port Arthur, Customs districts under the Houston district; and, (2) the Galveston and Houston ports of entry in the new Houston-Galveston district.

Inasmuch as the three districts are located near one another and perform similar services, it was estimated that the proposed con-

solidation would significantly reduce administrative salaries and expenses without impairing Customs ability to provide services to area businesses or to the general public.

Because vessels moving between Galveston and Houston must enter and clear Customs at both ports of entry, as required by 19 U.S.C. 1443 and 1444, it was anticipated that consolidation of the ports would allow vessels to enter and move between various locations along the 43-mile stretch of the channel between Galveston and Houston by entering and clearing at either port. In addition, under the single-port concept, merchandise unladen at Galveston destined for Houston could arrive at Galveston, be shipped to Houston without bond, and be entered for Customs purposes at Houston. Importers also could make entry at Houston and pick up merchandise at Galveston.

It was anticipated that the proposed consolidation also would reduce penalties incurred if carriers failed to enter and properly clear merchandise being shipped between Galveston and Houston; reduce overtime because carriers frequently traveled between the ports outside normal business hours; and reduce paperwork for carriers, importers, and Customs because of the reduction of penalty cases and after hour entries.

The notice of proposed rulemaking invited interested parties to submit comments regarding the proposed changes on or before February 17, 1981. In response, approximately 60 comments were received from individuals, Members of Congress, maritime brokers, shippers and agents, customhouse brokers, chambers of commerce, port commissioners, labor unions, municipalities, banks, truckers, warehouse operators, and trade associations.

A majority of the commenters favor the proposal. They are of the opinion that the proposal will eliminate unnecessary paperwork, make it easier to move ships and cargo within the consolidated port, simplify vessel clearance and entry procedures, reduce penalties involved by moving vessels and cargo between separate ports, enhance trade flow throughout the area without adversely affecting any parties, streamline the internal operations of Customs, save manpower and tax dollars, and generally provide more efficient service to the shipping and importing communities. They believe that the advantages accruing from the changes will outweigh the disadvantages.

Those commenters opposing the proposal argue that it will not offer the advantages claimed and that the same goals can be achieved without the consolidation.

Many of the commenters oppose the inclusion of the Port Arthur district in the combined Houston-Galveston district.

After further review, Customs has determined that, at this time, it is not in the public interest to include Port Arthur in the combined

Houston-Galveston Customs district. Accordingly, the proposal is being modified to retain Port Arthur as a separate district. However, Customs will continue to monitor the workload at Port Arthur and study the possibility of including it in the combined district at some other time.

Certain commenters express the opinion that the quality and quantity of service will be reduced without a corresponding savings in paperwork, money, and resources, and that the proposal will be costly and inconvenient for Customs and the public.

No evidence has been presented to indicate that the quality and quantity of service will be reduced. Presently, several positions are devoted solely to the administration of the district and do not directly serve the public. Following the consolidation, the salaries and expenses of these positions could be saved and the employees could be transferred to other positions directly serving the public. Further, Customs does not anticipate that the change will result in additional costs either to it or to the public.

Other commenters question whether consolidation of the districts will simplify entry and clearance procedures.

As stated in the notice of December 16, 1980, entry and clearance procedures will be simplified under the proposed consolidation of the *ports* of entry of Galveston and Houston. The *district* consolidation will not affect entry and clearance procedures.

Some commenters are of the opinion that the proposal would hinder growth in the area.

Customs does not agree. By making the consolidation, Customs will be able to respond more effectively to changing work loads and to requests for additional Customs service by reassigning personnel to locations where demands for service have increased significantly. Increased staffing depends upon the availability of additional manpower and these districts now must compete with other districts for scarce resources and manpower. By pooling manpower, Galveston and Houston could meet future demands for additional services without additional resources.

Certain commenters believe that consolidation of the Houston and Galveston ports of entry will not work. They state that the ports will lose control over vessels and merchandise entering in the consolidated port, creating additional paperwork, expense, and delays for importers receiving merchandise because paperwork would be processed in one location and the goods entered at another.

Customs does not anticipate that port consolidation will create more paperwork or increase costs for importers. Vessels now must enter and clear at both Galveston and Houston, making it necessary to prepare the paperwork for entering and clearing at each stop. An

entry fee also is collected at both locations. Following consolidation, the fee will be collected only once. Merchandise and vessel control will be no different at the Houston-Galveston consolidated port than at any other similar sized port handling the same volume of business.

Several commenters request that, following consolidation, Customs maintain separate port Codes for the Houston and Galveston ports of entry.

To facilitate accurate recordkeeping within the consolidated port of entry, each port will retain its port number.

Customs has determined to adopt the proposal with the above noted modifications. Accordingly, the Houston and Galveston, Texas, districts are consolidated into a single Houston-Galveston, Texas, Customs district and the Customs ports of entry of Houston and Galveston, Texas, are consolidated in the new Houston-Galveston, Texas, Customs port of entry.

The district limits of the Houston-Galveston district include all of the area in the existing Houston and Galveston districts. The port limits of the combined Houston-Galveston port encompass the territory within the present Houston and Galveston port limits.

MORRIS COUNTY, NEW JERSEY

On May 9, 1978, Customs published a document in the Federal Register (T.D. 78–130, 43 FR 19832) changing the field organization of the Customs Service to, among other things, transfer jurisdiction over Morris County, New Jersey, from Region III, Baltimore, Maryland, to Region II, New York, New York. However, the conforming change was not made to the Customs Regulations. To properly reflect the change, the Customs Regulations now must be amended.

PORT ARTHUR DISTRICT BOUNDARIES

The list of Customs districts in Region VI, in the table of Customs regions, districts, and ports of entry in section 101.3(b), Customs Regulations (19 CFR 101.3(b)), indicates that all of Chambers County is included in the Galveston district. However, from the time of its establishment as the Sabine Customs collection district in 1906, the western district boundary of Port Arthur has included the area south along the east boundary of Liberty County to the Gulf of Mexico which encompasses a portion of Chambers County between the Liberty County border extended to the Gulf of Mexico and the Chambers/Jefferson County border. Since the implementation of Executive Order No. 2702, on September 7, 1917, the remainder of Chambers County has been included in the Galveston District.

To clarify the district limits of both Port Arthur and Galveston, it is necessary to amend the description of the Port Arthur district limits to read as follows:

That part of the State of Texas from Sabine Pass North along the State line to the north boundary line of Shelby County; west to the Neches River; down the western shore of said river to the north boundary of Jefferson County; westerly along said boundary to the east boundary of Liberty County; south along the east boundary of Liberty County to the Gulf of Mexico, encompassing that portion of Chambers County between the Liberty County border extended to the Gulf of Mexico and the Chambers/Jefferson County border; also the parishes of Cameron and Calcasieu in the State of Louisiana.

Changes in the Customs Field Organization

Under the authority vested in the President by section 1 of the Act of August 1, 1914, 38 Stat. 623, as amended (19 U.S.C. 2), and delegated to the Secretary of the Treasury by Executive Order No. 10289, September 17, 1951 (3 CFR 1949–1953 Comp., Ch. II), and pursuant to authority provided by Treasury Department Order No. 101–5 (46 FR 9336), the following changes in the Customs field organization are adopted:

1. The Houston and Galveston, Texas, Customs districts are consolidated into a single Houston-Galveston, Texas, Customs district. The limits of the consolidated district include all of the territory currently in the Houston and Galveston, Texas, districts (the combined port of Houston-Galveston including territory described in T.D. 54409—Port Bolivar, and Texas City), Corpus Christi, Freeport, and Port Lavaca-Point Comfort, all in the State of Texas.

2. The Customs ports of entry of Houston and Galveston, Texas, are consolidated in the new Houston-Galveston, Texas, Customs district. The port limits of the consolidated port encompass Galveston, Texas, including Port Bolivar and Texas City, Texas, and the area within the present Houston, Texas, limits including territory described in T.D. 54409.

3. Jurisdiction over Morris County, New Jersey, is transferred from Region III, Baltimore, Maryland, to Region II, New York, New York.

4. The geographical boundaries of the Port Arthur, Texas, Customs port of entry are clarified to read as follows—"That part of the State of Texas from Sabine Pass north along the State line to the north boundary line of Shelby County; west

to the Neches River; down the western shore of said river to the north boundary of Jefferson County; westerly along said boundary to the east boundary of Liberty County; south along the east boundary of Liberty County to the Gulf of Mexico, encompassing that portion of Chambers County between the Liberty County border extended to the Gulf of Mexico and the Chambers/Jefferson County border; also the parishes of Cameron and Calcasieu in the State of Louisiana."

AMENDMENTS TO THE REGULATIONS

To reflect these changes, the following modifications are made to section 101.3(b), Customs Regulations (19 CFR 101.3(b)):

1. The list of Customs districts and ports of entry in Region VI, Houston Texas, is amended to read as follows:

Name and headquarters	Area	Ports of entry
Houstor-Galveston, Texas	That part of the State of Texas lying south of lat. 32° N. and that part of the State of Texas lying east of long. 97° W. except the territory included in the Port Arthur district.	Houston-Galveston, Tex., including territory described in T.D. 54409 and Port Bolivar and Texas City (T.D. 81-——). Corpus Christi (E.O. 8288, including territory described in T.D. 78-130). Freeport (E.O. 7632). Port Lavaca-Point Comfort, Tex. (T.D. 56115).

2. In the column headed "Area" in Region II, New York City, New York, "Morris," is inserted between "Sussex" and "Passaic."

3. The following is inserted in the column headed "Area" in the Port Arthur, Texas, Customs district: "That part of the State of Texas from Sabine Pass north along the State line to the north boundary line of Shelby County; west to the Neches River; down the western shore of said river to the north boundary of Jefferson County; westerly along said boundary to the east boundary of Liberty County; south along the east boundary of Liberty County to the Gulf of Mexico, encompassing that portion of Chambers County between the Liberty County border extended to the Gulf of Mexico and the Chambers/Jefferson County border; also the parishes of Cameron and Calcasieu in the State of Louisiana."

347-182 O - 81 - 2

Executive Order 12291

Because this will not result in a "major" rule as defined by section 1(b) of Executive Order 12291, the regulatory impact analysis and review prescribed by section 3 of the Executive Order is not required.

Inapplicability of Regulatory Flexibility Act

This document is not subject to the provisions of sections 603 and 604 of Title 5, United States Code (as added by section 3 of Pub. L. 96–354, the "Regulatory Flexibility Act"), because it was the subject of a notice of proposed rulemaking published in the Federal Register before January 1, 1981, the effective date of the Act.

Drafting Information

The principal author of this document was Lawrence P. Dunham, Regulations and Information Division, Office of Regulations and Rulings, U.S. Customs Service. However, personnel from other Customs offices participated in its development.

Dated: May 28, 1981.

John P. Simpson,
Acting Assistant Secretary of the Treasury.

[Published in the Federal Register June 2, 1981 (46 F.R. 29462)]

(T.D. 81–161)

Customs Approved Public Gauger

Approval of public gauger performing gauging under standards and procedures required by Customs

Notice is hereby given pursuant to the provisions of section 151.43 of the Customs Regulations (19 CFR 151.43) that the application of Commodity Control Services Corporation, 170 Broadway, New York, New York 10038, to gauge imported petroleum and petroleum products in the Customs Districts of New York, Houston, and New Orleans in accordance with the provisions of section 151.43 of the Customs Regulations is approved.

Dated: May 29, 1981.

Anthony L. Piazza,
Director, Entry Procedures and Penalties Division.

[Published in the Federal Register June 9, 1981 (46 F.R. 30616)]

(19 CFR Part 134)

(T.D. 81-162)

Notice of Specific Country-of-Origin Marking Requirements for Imported Anchors

AGENCY: U.S. Customs Service, Department of the Treasury.

ACTION: Notice of specific country of origin marking requirements for imported anchors.

SUMMARY: Customs has learned that the country of origin on imported anchors, classified under item 652.03, Tariff Schedules of the United States, is sometimes marked by means of paint stenciling. Typically, anchors are stored outdoors and are subject to weathering which causes the paint stenciled marking to either be washed off or become obscured due to rust. This document gives notice that, with certain specified exceptions, anchors shall be permanently and legibly marked with the country of origin by die stamping, raised lettering, or an equally permanent method of marking.

DATES: This ruling shall be effective as to merchandise entered, or withdrawn from warehouse, for consumption on or after (90 days from date of publication in the Federal Register).

FOR FURTHER INFORMATION CONTACT: James Bartley, Entry Procedures and Penalties Division, U.S. Customs Service, 1301 Constitution Avenue, NW., Washington, D.C. 20229 (202-566-5765).

SUPPLEMENTARY INFORMATION:

BACKGROUND

Section 304(a), Tariff Act of 1930, as amended (19 U.S.C. 1304 (a)), provides that every imported article of foreign origin, or its container, shall be legibly and conspicuously marked to indicate to an ultimate purchaser in the United States the English name of the country of origin of the article. That section also authorizes the Secretary of the Treasury to require specific methods of marking articles.

Part 134 of the Customs Regulations (19 CFR Part 134), sets forth the regulations implementing the country of origin marking requirements of 19 U.S.C. 1304(a), together with certain marking provisions of the Tariff Schedules of the United States (TSUS) (19 U.S.C. 1202). Section 134.42, Customs Regulations (19 CFR 134.42), provides that specific methods of marking merchandise with its country of origin may be required by the Commissioner of Customs in accordance with 19 U.S.C 1304(a), and that notices of

such rulings shall be published in the Federal Register and the Customs Bulletin.

Customs has learned that the country of origin marking requirements are not being applied uniformly to imported anchors, classified under item 652.03, TSUS. Sometimes, the name of the country of origin on these articles is marked by means of paint stenciling. Generally, anchors are stored outdoors and are subject to weathering which causes the paint stenciled markings to either be washed off or become obscured due to rust.

Permanent marking of imported anchors is needed to insure that an ultimate purchaser in the United States will be aware of the country of origin of the articles. Further, it appears that often when anchors are imported, they are "used" rather than new articles and that some of the anchors are of United States origin. In these cases, permanent markings will aid Customs officers in establishing whether used anchors imported into the United States are entitled to an exemption from the payment of duty as products of the United States.

SPECIFIC METHOD OF MARKING REQUIRED

To provide for uniformity of application of the country of origin marking requirements of 19 U.S.C. 1304, and to clarify those marking requirements, imported anchors shall be marked with their country of origin as follows:

1. Anchors, imported individually or in bulk by a distributor for resale to ultimate purchasers in the United States, shall each be permanently and legibly marked with the country of origin by die stamping, raised lettering, or an equally permanent method of marking. Anchors which are marked with the name of a location in the United States also shall be marked with the name of the country of origin preceded by, and in close proximity to, words such as "Made in," "Product of," or other words of similar meaning. This marking must be permanent and legible and in letters of comparable size as the name of the location in the United States.

2. There are two exceptions from the general country of origin marking requirements stated above for imported anchors, which are *not* marked with the name of a location in the United States—

(a) If the anchors are ordered directly from a foreign supplier by a contractor or other ultimate purchaser in the United States who will use them and not offer them for resale, and if Customs

is satisfied that the anchors were made in the country named in the invoice, they may be excepted from country of origin marking under 19 U.S.C. 1304(a)(3)(H).

(b) If the anchors are imported directly from a foreign supplier by a carrier, vessel owner, or shipbuilder, for use by the importer and not intended for sale in its imported or any other form, the anchors may be excepted from country of origin marking under 19 U.S.C. 1304(a)(3)(F).

AUTHORITY

This notice is being published in accordance with section 304, Tariff Act of 1930, as amended (19 U.S.C. 1304), and section 134.42, Customs Regulations (19 CFR 134.42).

DRAFTING INFORMATION

The principal author of this document was Barbara E. Whiting, Regulations and Information Division, Office of Regulations and Rulings (566–8237). However, personnel from other offices of the Customs Service participated in its development.

Dated: June 1, 1981.

JACK T. LACY,
Acting Commissioner of Customs.

[Published in the Federal Register June 8, 1981 (46 FR 30338)]

(T.D. 81–163)

Bonds

Approval and discontinuance of Carrier's Bonds, Customs Form 3587

Bonds of carriers for the transportation of bonded merchandise have been approved or discontinued as shown below. The symbol "D" indicates that the bond previously outstanding has been discontinued on the month, day, and year represented by the figures which follow. "PB" refers to a previous bond, dated as represented by figures in parentheses immediately following, which has been discontinued. If the previous bond was in the name of a different company or if the surety was different, the information is shown in a footnote at the end of the list.

Dated: June 1, 1981.

Name of principal and surety	Date of bond	Date of approval	Filed with district director/area director/amount
Air Cargo Services, Inc., P.O. Box 30961, Raleigh, NC; air carrier; United States Fire Ins. Co.	July 29, 1980	Apr. 20, 1981	Wilmington, NC $25,000
Broward Air Freight Terminals, Inc., P.O. Box 28816, Ft. Lauderdale, Fla.; motor carrier; Peerless Ins. Co. D 4/15/81	Apr. 15, 1976	Apr. 23, 1976	Miami, FL $25,000
Circle B Transportation of North Dakota, P.O. Box 207, Wheatridge, CO; motor carrier; Northwestern National Ins. Co. of Milwaukee, WI.	Mar. 18, 1981	Apr. 14, 1981	El Paso, TX $25,000
Commercial Transfer Moving and Storage Co., 901 E. Glendale Ave., Sparks, NV; motor carrier; The Aetna Casualty & Surety Co.	Jan. 20, 1981	Mar. 27, 1981	San Francisco, CA $25,000
Domtar Inc., 6789 Airport Rd., Malton, Ontario, Canada; motor carrier; The Continental Ins. Co.	Aug. 1, 1980	Apr. 10, 1981	Buffalo, NY $50,000
Fall River & New Bedford Express Co., Inc., Ridge Hill Rd., Assonet, MA; motor carrier; The Continental Ins. Co.	May 29, 1980	Mar. 27, 1981	Boston, MA $50,000
Forge Village Transportation Co., Inc., 39 Central Ave., Ayer, MA; motor carrier; The American Ins. Co.	Mar. 6, 1981	Mar. 26, 1981	Boston, MA $50,000
Hawks Express, Inc., 32 Jacobus Ave., S. Kearny, NJ; motor carrier; Washington International Ins. Co.	Apr. 3, 1981	Apr. 8, 1981	Newark, NJ $50,000
Alvin Haynes Trucking Co., 1225 W. High St., P.O.B. 1635, Lexington, KY; motor carrier; U.S. Fidelity & Guaranty Co.	Feb. 3, 1981	Apr. 15, 1981	Cleveland, OH $50,000
Jet Air Freight & Parcel Delivery, Inc., P.O.B. 9313—Baer Field, Fort Wayne, IN; motor carrier; American States Ins. Co	Dec. 31, 1980	Apr. 6, 1981	Chicago, IL $30,000
Kopak, Inc., d/b/a K-Cartage Corp., 4320 N.W. 72nd Ave., Miami, Fla.; motor carrier; St. Paul Fire & Marine Ins. Co.	Sept. 30, 1980	Mar. 31, 1981	Miami, FL $25,000
Keystone Airfreight Express, Inc., 119 McLaughlin Run Rd., Cornopolis, PA; motor carrier; St. Paul Fire & Marine Ins. Co.	Mar. 18, 1981	Apr. 2, 1981	Philadelphia, PA $25,000
J. F. Lomma, Inc., 125 Adams St., S. Kearny, NJ; motor carrier; Investors Ins. Co. of America	Apr. 20, 1981	Apr. 28, 1981	Newark, NJ $50,000
Mid-Western Transport, Inc., P.O.B. 3763, Santa Fe Springs, CA; motor carrier; St. Paul Fire & Marine Ins. Co.	Nov. 27, 1979	Dec. 11, 1979	Los Angeles, CA $50,000
Port East Transfer, Inc., Pulaski Highway and 68th St., Baltimore, MD; motor carrier; Fidelity & Deposit Co. of MD (PB 2/9/79) D 4/8/81	Mar. 3, 1981	Apr. 8, 1981	Baltimore, MD $25,000
Ram Rod Trucking, P.O. Box 707, Marrero, LA; contract carrier; The Aetna Casualty & Surety Co.	Mar. 24, 1981	Mar. 24, 1981	New Orleans, LA $50,000

Name of principal and surety	Date of bond	Date of approval	Filed with district director/area director/amount
J.P. Reynolds Co., Inc., P.O. Box 13071, Fort Lauderdale, Fla.; motor carrier; St. Paul Fire & Marine Ins. Co.	Apr. 6, 1981	Apr. 13, 1981	Miami, FL $25,000
Robahlee Carter Trucking Co., P.O.B. 1508, Reidsville, NC; motor carrier; St. Paul Fire & Marine Ins. Co.	Apr. 15, 1981	Apr. 15, 1981	Wilmington, NC $25,000
Eluterio Rodriguez, Jr., P.O.B. 142, Edinburg, TX; motor carrier; Fidelity & Deposit Co. of MD	Nov. 9, 1979	Apr. 14, 1981	Laredo, TX $25,000
Silver Wheel Freightlines, Inc., 1221 S.E. Water Ave., Portland, OR; motor carrier; Peerless Ins. Co. D 6/3/81	Mar. 28, 1979	Apr. 5, 1979	Portland, OR $25,000
State Wide Trucking, Inc., 955 Dairy Ashford, 202, Houston, TX; motor carrier; National Surety Corp.	Mar. 26, 1981	Mar. 31, 1981	Houston, TX $50,000
Transcold Express, Inc., P.O. Box 61228, Dallas, TX; motor carrier; Hartford Accident & Indemnity Co. (PB 5/13/78) D 4/7/81 [1]	Dec. 18, 1980	Apr. 7, 1981	Chicago, IL $50,000

[1] Principal is Trans-Cold Express, Inc.; Surety is National Bonding & Accident Ins. Co.

(BON-3-03)

MARILYN G. MORRISON
Director,
Carriers, Drawback and Bonds Division.

Customs Service Decisions

DEPARTMENT OF THE TREASURY,
OFFICE OF THE COMMISSIONER OF CUSTOMS,
Washington, D.C.

The following are decisions made by the United States Customs Service where the issues involved are of sufficient interest or importance to warrant publication in the Customs Bulletin.

DONALD W. LEWIS,
Director,
Office of Regulations and Rulings.

Date: January 7, 1981
File: WAR-1-CO:R:CD:D L
212445

(C.S.D. 81-151)

Subject: Bonded Warehouse: Liability of the importer of record for merchandise stored in a class 2 customs bonded warehouse.

DISTRICT DIRECTOR OF CUSTOMS,
Chicago, Illinois.

DEAR SIR: This protest was filed against your decision in the liquidation of warehouse entry No. 111606 of February 3, 1969, at the Port of Chicago. The protest concerns the liability of the importer of record for merchandise stored in a Class 2 Customs bonded warehouse.

Issue: Is the importer of record liable for duties on merchandise entered but not found in a Class 2 Customs bonded warehouse?

Facts: Thirty cases of carbons were entered for warehouse in a Class 2 Customs bonded warehouse by the importer of record and protestant. The protestant states that it did not, to its knowledge, authorize or make any withdrawals against the warehouse entry. It further states that since the Customs Service has no record of withdrawals against the warehouse entry, it would appear that the merchandise was disposed of without the knowledge of either Customs or the protestant.

The protestant contends that the warehouse proprietor should be liable under its Proprietor's Warehouse Bond rather than the

importer of record under the Warehouse Entry Bond and requests reliquidation of the warehouse entry and refund of $493.05 duties paid.

Law and analysis: A substantially similar issue was ruled upon in C.I.E. 686/59 of May 4, 1959 (copy attached). That decision points out that under the Tariff Act of 1930, as amended, the consignee of the merchandise is regarded for Customs purposes as the owner of the imported merchandise and as such owner is liable for the duties thereon. Section 563 of the Tariff Act affords no relief from the payment of such duties in the case of merchandise stolen from the warehouse, nor is it possible to shift the responsibility for such duties to the warehouseman from whose warehouse the merchandise was stolen.

It further points out that the Government has an independent action for the payment of liquidated damages against the proprietor of the warehouse under the terms of the Proprietor's Warehouse Bond when it finds his duties as a warehousemen have not been faithfully performed. However, resort is had to such action only where the evidence is clear that the proprietor was negligent in not meeting his responsibility as a warehouseman.

In the present case there is no allegation of theft of the merchandise, only that the merchandise could not be accounted for. Neither is there any allegation or evidence of negligence on the part of the warehouse proprietor.

In the absence of clear evidence of negligence of the part of the warehouseman, it is our opinion that the consignee of merchandise entered for warehouse but not found remains liable for duty thereon.

Holding: Without clear evidence of negligence on the part of the warehouse proprietor, the importer of record is liable for duties on merchandise entered but not found in a Class 2 Customs bonded warehouse. This protest, therefore, should be denied in full.

(C.S.D. 81-152)

Subject: Aircraft: Report of arrival requirements for U.S. military aircraft arriving foreign with retired military personnel traveling in space available status.

Date: January 8, 1981
File: AIR-6-01-CO:R:CD:C
104705 PH

This ruling concerns the requirements applicable to military aircraft arriving in the United States carrying, on a space-available basis, retired military personnel and dependents on home leave.

347-182 O - 81 - 3

Issue: What Customs requirements are applicable to military aircraft arriving in the United States with space-available passengers, consisting of retired military personnel and dependents on home leave, who have paid a $10.00 processing fee.

Facts: The inquirer states that United States military aircraft have been carrying space-available passengers who are charged $10.00 "as a fee for processing". These passengers are retired military personnel and dependents on home leave who "are not on official business or orders". The inquirer has requested our advice concerning the application of report of arrival and entry requirements to such aircraft arriving in the United States from a foreign port.

Law and analysis: Section 6.1(d), Customs Regulations, defines the word "aircraft", as used in Part 6, Customs Regulations, as,

> . . . any aircraft not used exclusively in the governmental service of the United States or a foreign country, and includes any government-owned aircraft engaged in carrying persons or property for commercial purposes.

In applying this provision to government aircraft carrying passengers, we have ruled that an aircraft is used in the governmental service when the passengers are carried "in the interest of or for the government" (ruling letters MS 233.11 P, July 29, 1969, and AIR-4-07-R:CD:C 101556 F, September 12, 1975).

It is our opinion that the transportation, on a space-available basis, of retired military personnel and dependents on home leave is "in the interest of or for the government". (See, Department of Defense Regulations on Air Transportation Eligibility, January 1980 (DOD 4514.13-R), Chapter 4; see also, *Watt* v. *United States*, 246 F. Supp. 386, 388 (1965), in which the Court stated, "It is not disputed that a retired soldier, continues in the military service of the Government . . .").

In the case under consideration, the passengers were required to pay a $10.00 processing fee. In our opinion, this is a nominal fee and does not result in the carrying of persons for commercial purposes provided for in the last clause of section 6.1(d).

Accordingly, because the aircraft under consideration do not come within the definition of "aircraft" in section 6.1(d), Part 6 is not applicable. In ruling letter AIR-4-07-R:CD:C 101556 F, September 12, 1975, we were asked what provisions would be applicable if Part 6 were not applicable. We ruled that the aircraft would be subject to the provisions of section 4.5(a), Customs Regulations.

Under section 4.5(a), no report of arrival or entry is required, but the master or commander must file a declaration, as provided for in section 148.72, Customs Regulations, and, if any cargo passengers are on board, he also must file a manifest of any cargo and a list of any passengers and their baggage, as provided for by section 4.5(a).

Holding: Pursuant to section 4.5(a) Customs Regulations, United States military aircraft arriving in the United States with space-available passengers, consisting of retired military personnel and dependents on home leave who are not on official business or under orders, are not required to make a report of arrival or entry, whether or not the passengers have paid a $10.00 processing fee, but are required to file the declaration and manifest provided for in that section.

Effect on other rulings: Ruling letter AIR–6–01–RRUCDC 104705 PH, September 12, 1980, is revoked.

(C.S.D. 81–153)

Drawback: Chemical Milling of Titanium Offcuts Constitutes Manufacturing Under 19 U.S.C. 1313(a)

Date: January 8, 1981
File: DRA–1–09–CO:R:CD:D
212371 SMC

Issue: Are chemically milled titanium offcuts "manufactured or produced" under section 313(a) of the Tariff Act of 1930, as amended (19 U.S.C. 1313(a))?

Facts: Imported titanium in the form of sheets or offcuts, offcuts being any portion of an entire sheet, are subjected to a chemical milling process whereby the titanium pieces are decreased in gauge to customer's specifications by a controlled chemical dissolution with suitable chemical reagents or etchants. Metal may be removed from the entire piece or may be selectively removed by etching only that portion which is not protected from the chemical attack by a mask. The dissolution may be preceded by a cleansing process and is normally followed by a rinsing procedure. The chemically milled titanium offcuts are then ready for export.

A reduction in the gauge of the titanium offcuts of as little as ten-thousandths of an inch increases their value significantly. A failure to reduce the gauge to the proper customer's specifications can result in the rejection of the product. The reduction in gauge and consequently the weight reduction increases design capability and flexibility in the fabrication of parts for aircraft and space vehicles. Without such a reduction, the offcuts would not be suited for such an industry.

Law and analysis: Section 313(a) of the Tariff Act of 1930, as amended (19 U.S.C. 1313(a)) requires the use of imported merchandise in the manufacture or production of the exported articles.

"Manufacture" has been defined for customs purposes in *Anheuser-Busch Brewing Association* v. *United States*, 207 U.S. 556 (1907), where the Supreme Court stated:

> There must be a transformation; a new and different article must emerge, "having a different name, character, or use."

The fact that an exported product does not have a distinctive name different from that of the imported product, as in the instant case, does not preclude there being a manufacture or production. As the Customs Court stated in *United States* v. *International Paint Co.*, 35 C.C.P.A. 87, 93 (1948):

> "the requirements of change of name, character, or use given in the definition are stated in the disjunctive."

The *Anheuser-Busch* requirements that a manufactured article have a different character and use are satisfied when an imported article which is not suited for a commerical use is further manufactured into one that is suited for a commercial use. An imported article may be useful in a general sense, but not for the particular purpose intended. Manufacture or production is defined in terms of fitness for a particular use. In *International Paint Co.*, *supra* at page 94, for example, the court stated that:

> "proof that there was a change in character is found in the fact that the exported product was fitted for a distinctive use for which the imported product was wholly unfit . . ."

Holding: The chemical milling of titanium offcuts constitutes a manufacture under section 313(a) of the Tariff Act of 1930 as amended (19 U.S.C. 1313(a)).

(C.S.D. 81-154)

Date: January 9, 1981
File: VES-13-18-CO:R:CD:C
104440 JL

Subject: Vessels: Denial of remission of duties assessed under 19 U.S.C. 1466 on foreign repairs resultant of a single act of negligence.

The subject Protest is taken against your liquidation of certain repairs accomplished in Gibraltar on the (vessel name) in March, 1977, as dutiable pursuant to 19 U.S.C. 1466. A petition for remission of duties was filed by the owner of the vessel on March 1, 1978, following the denial by you of its application for remission on February 14, 1978. The petition was reviewed by this office, and a memorandum denying relief was forwarded to you on April 28, 1978.

The owner filed a Request for Reconsideration on July 11, 1978. In a ruling to you dated February 14, 1979, the Assistant Commis-

sioner, Regulations and Rulings, after reviewing the Request for Reconsideration, affirmed this office's decision of April 28, 1978.

The record discloses that the entry in question was liquidated on August 10, 1979, and that the Protest was filed on November 6, 1979.

Briefly stated, the damage to the vessel was caused by the failure of someone in the crew to close valves in the ballast system. The open valves allowed water to flood the engine room. The flooding allowed debris to enter the engine oil tanks. The contamination of the oil led to the failure of the vessel's engines while steaming from Israel and forced it to put into Gibraltar for repairs. The owner's petition for remission states that ". . . the ship's officers were negligent in opening valves in the ballast system". This factual pattern was not controverted in the Request for Reconsideration and, except for specifically identifying the two negligent parties as a junior engineering officer and an unlicensed member of the crew, is not varied in the Protest.

The Protestant's position is as follows:

> (1) An analysis of Customs rulings on the subject of negligence of ships' officers discloses that continuing acts or patterns of neglect were present in all cases denying relief, rather than single incidents, such as occurred in this case.
>
> (2) The policy considerations in applying section 1466 will not be thwarted by finding a remissible casualty in this or any case where a single unforeseeable act of negligence led to damage.

In other words, the Protestant urges us to modify that part of the "rule" expressed in both denials which states that the single act of negligence of the officer is sufficient to deny relief, that is, a finding of "other casualty" under 19 U.S.C. 1466(d)(1).

Regarding (1), the cases cited by Protestant all were decided utilizing the so-called "doctrine of unforeseeability" first enunciated in CIE 488/47. The test at that time was whether or not the negligent act or acts (or the damages resulting therefrom) could have been foreseen and guarded against by the ship's officers in a given case. This approach was abandoned as conclusive in determining whether an occurrence which is not the consequence of extrinsic force is a casualty in the holding in CIE 1161/62. CIE 1077/59, decided before the foreseeability doctrine was abandoned as conclusive, discussed single acts of negligence, as opposed to continuing negligence, and concluded that a single act would *not* qualify as a casualty unless the act could not have been foreseen and guarded against by the ship's officers. This serves to rebut the argument that the rule in (vessel name) was a departure from previous Customs policy. There also is a line of cases decided subsequent to CIE 1161/62 and prior to (vessel name) which holds that

single negligent acts of ships' officers preclude relief under the "other casualty" provision of 19 U.S.C. 1466(d)(1). (B/L January 4, 1972, case 199101; H/L April 28, 1977, case 102602; H/L January 14, 1977, case 102046; H/L November 18, 1977, case 102708; B/L May 17, 1972, case 198891).

With regard to the policy questions raised by the Protestant, similar arguments were presented in his July 11, 1978, Request for Reconsideration. The single act of negligence rule nevertheless was affirmed by the Assistant Commissioner, Regulations and Rulings, in his February 14, 1979, decision. The rule was again stated with approval in a decision to the Regional Commissioner at San Francisco dated August 25, 1980 (case 104542), by the Director, Office of Regulations and Rulings. In our opinion, these decisions clearly establish the single act of negligence rule in the (vessel name) case as the policy of the Customs Service in this area.

The issue of whether the single act of negligence of a ship's officer is remissible under Section 466 of the Tariff Act has not been decided by the Courts. However, in the 1977 case of *Suwannee Steamship Company* v. *United States* (C.D. 4708), the Customs Court did observe in the penultimate paragraph of its opinion that it was reasonable for Customs to conclude that the single negligent act of the vessel's chief engineer in failing to flush the fresh water tanks while in port did not justify remission under the "other casualty" provision of the statute.

For the reasons stated, you are directed to deny the Protest. Please inform the Protestant of our decision.

(C.S.D. 81–155)

Entry: Failure To Produce Missing Documents for Conditionally Free Merchandise

Date: January 9, 1981
File: ENT–1–14 RRUEE
713580 JB

This ruling concerns a request for internal advice concerning the failure to produce missing documents for conditionally-free merchandise after expiration of the bond period and the time for filing protests after liquidation of the entries as dutiable.

Issue: May or may not a claim for relief be granted and an entry reliquidated within one year of the date of liquidation (19 U.S.C. 1520(c)(1)) when a customhouse broker, as the importer of record, repeatedly does not produce missing documents to support claims for conditionally-free goods until after liquidation of the entry and expiration of the time period for protest (90 days; 19 U.S.C. 1514).

Facts: A broker, as importer of record, enters conditionally-free merchandise under bond to produce missing documents to support the claim for free entry (the declaration and superseding bond of the actual owner are not filed with Customs). The entries are liquidated by Customs as dutiable and the claim for free entry is treated as abandoned upon expiration of the bond period to produce the missing documents. Further, the missing documents are not filed before the time in which liquidation becomes final (90 days; 19 U.S.C. 1514). Subsequently, often 6 months after the expiration of time when the liquidation became final, the documents are presented to Customs under claims for relief pursuant to 19 U.S.C. 1520(c)(1). Reasons supplied by the broker for late filing or document failure are characterized by the district director of Customs as insubstantial.

Law and analysis: 19 U.S.C. 1514 in pertinent part permits a protest to be filed against decisions as to the classification and appraised value of merchandise if filed within the stated time limits.

19 U.S.C. 1520(c)(1) permits reliquidation of an entry to correct a clerical error, mistake of fact, or inadvertence, not amounting to an error in the construction of a law, if the claim is timely made (within 1 year from the date of liquidation or exaction).

19 CFR 10.112 provides in pertinent part that:

> Whenever a free entry . . . document . . . required to be filed in connection with the entry is not filed at the time of entry or within the period for which a bond was filed for its production, but failure to file it was not due to willful negligence or fraudulent intent, such document . . . may be filed at any time prior to the liquidation of the entry, or if the entry was liquidated, before the liquidation becomes final. . . .

19 CFR 10.172, for free entry pursuant to GSP (Generalized System of Preferences), contains provisions and time limits similar to 19 CFR 10.112 but, in addition, provides for the filing of a certificate of origin, or a duplicate thereof, as constituting the written claim for duty-free treatment of goods when the claim for free entry was not made at the time of entry.

Where a customhouse broker, as a matter of practice and in the judgment of the district director of Customs, presents a claim for relief pursuant to 19 U.S.C. 1520(c)(1) and does not present substantial information that failure to file missing documents within the period provided in 19 CFR 10.112 (after expiration of the time for protest of the liquidation and the bond period for production of the missing documents (19 CFR 113.43(c) and 172.22(c)), the district director may deny the claim and refuse to reliquidate the entry. It is evident from the information supplied that the failure to supply the missing documents for free entry for the Customs

transactions is not due to inadvertence, but constitutes negligent inaction. Consequently, the broker's claim for relief under 19 U.S.C. 1520(c)(1) may be denied. The time limits in 19 CFR 10.112, in effect, restrict the claimant's recourse.

Holding: A claim for relief for inadvertent failure to produce missing documents for conditionally free merchandise (19 U.S.C. 1520(c)(1)), made within 1 year after liquidation of the entry as dutiable, shall be denied when an importer or a customhouse broker, as the importer of record, engages in an evident practice of requesting refunds in this manner. The records and reasons for the document failures for each entry are not supported in substance and constitute willful inaction by the importer of record.

(C.S.D. 81–156)

Classification: Wood Molding and Turnings Used in Construction of Baby Beds

Date: January 21, 1981
File: CLA–2:CO:R:CV:G
065523 AL

DISTRICT DIRECTOR OF CUSTOMS,
Mobile, Alabama

DEAR SIR: This is in response to request for Internal Advice No. 205/79, dated August 6, 1979, and received in this division November 3, 1980. The merchandise is standard wood molding, and certain wood turnings, all used to construct cribs, that is, baby beds.

Facts: The imported pieces of wood, such as top rails, bottom rails, posts and spindles, do not constitute all the parts for a crib. While some pieces may be imported in specific lengths and patterns, they are further sanded, stained and painted. Of submitted samples described as wood spindles and wood side posts, all are wood spindles in material form. Additional manufacturing processes must be performed to use the spindles as crib parts. In the condition as imported, the spindles have various uses for architectural and furniture decoration. Top and rails and corner returns are used as crib (furniture) parts without further manufacturing process.

Issue: Whether the wood turnings, moldings and dowels are classifiable as parts of furniture, of wood, under item 727.40, Tariff Schedules of the United States (TSUS), or, in the appropriate item number of the tariff schedules, that is, item 202.64 (standard wood moldings), item 202.66 (other wood moldings, and wood carvings and ornaments suitable for architectural or furniture decoration), and items 200.91, 200.93, and 200.95 (wood dowel rods).

Law and analysis: The wood pieces, as imported, do not constitute an unfinished article because the importations do not constitute a substantially complete article.

The individual turned spindles can be used for multiple purposes. Also, additional processes have to be performed on these pieces before they can be used for furniture parts.

The top end rails and corner returns are used as parts of cribs without further manufacturing processes.

The term "standard wood moldings" as used in items 202.62 and 202.64, TSUS, embraces moldings used to construct cribs for children, and other furniture. (T.D. 71–83(29)).

Holding: (1) The wood spindles, including the side posts, are classifiable under the provision for other wood moldings, and wood carvings and ornaments suitable for architectural or furniture decoration, in item 202.66, TSUS. The rate of duty is 8 percent ad valorem. The rate of duty is 7.5 percent ad valorem on January 1, 1981. Also, this merchandise may be subject to duty free treatment under the Generalized System of Preferences (GSP), if it meets eligibility requirements.

(2) The top end rails and corner returns are classifiable as other parts of furniture, of wood, in item 727.40, TSUS, dutiable at the rate of 8.5 percent ad valorem. This merchandise also may be subject to duty free entry under GSP.

(3) Wood dowels which must be further processed for use as crib parts are classifiable in the appropriate item number of TSUS. If advanced in condition, tariff classification would be under item 200.95, TSUS, dutiable at the rate of 15.6 percent ad valorem, to be reduced to 14.4 percent ad valorem January 1, 1981.

(4) Those pieces which are within the purview of "standard wood moldings," and of Ramin wood, are classifiable under item 202.64, TSUS, and can be entered free of Customs duty.

(C.S.D. 81–157)

Subject: Classification: Ovaltine classifiable as an edible preparation and not malted milk or an article of milk for tariff purposes.

Date: January 22, 1981
File: CLA–2:CO:R:CV:G
064070 JH

This is in reference to your inquiry concerning the classification of an Ovaltine product reportedly containing 80 percent of malted milk, which is being imported into New York and San Francisco.

The product in question is apparently one which is produced in England and by (Corporate Name) with a trade name "Ovaltine."

347-182 O - 81 - 4

It is packed in one-pound tins, and contains information in both Chinese and English. It is stated on all the invoices that this is a Chinese formulation for export to the far east markets. When imported into the United States it is intended for the ethnic market.

The composition of Ovaltine is given as 66 percent of malt extract, 18 percent milk powder, 10 percent cocoa powder and 3 percent sugar.

The question is whether their Ovaltine in question is a malted milk or an article of milk within the meaning of item 118.30, Tariff Schedules of the United States (TSUS), and, therefore, subject to quota.

Malted Milk is said to be made with one pound of milk to 1.25 pounds of malt extract, while Ovaltine is about 3.66 pounds of malt extract to one of milk. Consequently, it is not believed that Ovaltine is formulated in a proportion that even approximates malted milk for tariff purposes. Furthermore, from the cost breakdown provided, it appears that the component of chief value is the cocoa powder.

Accordingly, the product in question, being neither a malted milk nor an article of milk for tariff purposes, is not subject to quota. It might be noted that in 1959 Customs ruled that a product called Ovaltine was classifiable in paragraph 708, Tariff Act of 1930, as a compound, mixture or substitute for milk or cream. No such provision is in the tariff under the current law.

Ovaltine, with composition as given above, in 1-pound tins, for retail sale is classifiable under the provision for edible preparations, not especially provided for, in item 183.05, TSUS. The rate of duty is 10 percent ad valorem.

(C.S.D. 81–158)

Subject: Classification: Fluorescent pigments.

Date: January 22, 1980
File: CLA–2 CO:R:CV:G
065965 JH

Your letter of December 22, 1980, concerns the classification of fluorescent pigments.

You state that 97% of the product is composed of para-toluene, sulphonamide, melamine, and para-formaldehyde. You believe that the product is similar to "Luminophores" as described in the Brussels Nomenclature.

Products of the type described are classifiable under the provision for other colors, dyes, stains, and related products: colorlakes and toner of benzenoid derivation in item 410.34, TSUS. The rate of duty is 18% ad valorem.

(C.S.D. 81-159)

Subject: Conditions constituting violation of 46 U.S.C. 251(a) (the Nicholson Act) when foreign-flag vessels engage in the transshipment of fish products.

Date: January 26, 1981
File: VES-7-02-CO:R:CD:C
VES-7-03/7-05
104779 MKT
104912
104522

Your letters of June 30 and October 10, 1980, ask that we reconsider our ruling of May 2, 1980, that a foreign-flag vessel which receives fish on the high seas, in the fishery conservation zone (16 U.S.C. 1811), from United States-flag catching vessels, and then transships the fish to another foreign-flag vessel, for direct exportation, in the territorial waters of the United States, would be in violation of the Nicholson Act, title 46, United States Code, section 251(a), second sentence.

Specifically, you argue that the transshipment of fish from one foreign-flag vessel to another would not constitute a "landing", and that a transshipment in the territorial sea outside the area you assert anyone could construe to be a port would not be in a "port of the United States", within the meaning of the Nicholson Act. In addition, you request other legal bases which might prohibit a transshipment of fish from one foreign-flag vessel to another in the territorial sea. You also request our views on the meaning of the word "unlade", the geographical scope of the term "elsewhere", and the definition of "entry" and "port of entry" within the purview of 19 U.S.C. 1447.

Under the activity you contemplate, United States vessels would transship fish they caught in the fishery conservation zone to a foreign-flag vessel on the high seas. The foreign-flag vessel would then transport the fish to United States territorial waters, specifically Dutch Harbor, Alaska, where the vessel would transship the fish to a Dutch-flag vessel, the (vessel name) for direct exportation.

To respond to your questions in detail, it is necessary to review the history of section 4311 of the Revised Statutes and the Nicholson Act ("the Act"). Section 4311, codified as the first sentence of 46 U.S.C. 251(a), which antedates the Act, reserves the privileges of vessels employed in the American fisheries to properly documented vessels built in the United States and owned by United States citizens. R.S. 4311 has been interpreted by Customs, at least since 1943, to preclude a vessel employed in fishing, other than a vessel of the United States, or a vessel of less than five net tons owned by a U.S. citizen or by an alien resident in the United States, from coming into a port *or place* in

the United States except to secure supplies, equipment, or repairs, or if in distress, unless authorized to do so by a treaty or convention (19 CFR 4.96(b), in effect since 1943; *see* T.D. 52880). In addition, R.S. 4311 has been interpreted, at least since 1924, to prohibit the transshipment of fish taken on the high seas by a foreign-flag fishing vessel to another vessel within the three mile limit.

The purpose of the Act, which became effective in 1950, is to strengthen R.S. 4311 by prohibiting a foreign-flag fishing vessel from proceeding to a foreign port, there exchanging its document for that of a cargo vessel, and then proceeding to the United States to market its catch taken on the high seas. There is nothing in the legislative history of the Act to reflect an intention by the Congress to limit R.S. 4311, as interpreted by the Customs Service or its predecessor agency, the Department of Commerce, by restricting its application to an area which does not encompass the territorial waters of the United States or by adding to the purposes for which a foreign-flag fishing vessel may enter U.S. territorial waters.

By its terms, the Act prohibits a foreign-flag cargo or other vessel from landing in a port of the United States fish or fish products processed therefrom taken or received on the high seas. Since 1974, the Customs Service has interpreted the Act to prohibit any foreign-flag vessel from transshipping fish taken or received on the high seas, or fish products processed therefrom, whether or not for export, to another vessel within United States territorial waters.

In order to apply the Act consistently with our previous administration of R.S. 4311 and the interpretation of R.S. 4311 by our predecessor agency, the Department of Commerce, we must apply the Act to the same activities when performed by any type of foreign-flag vessel. Therefore, we find that the transshipment described above is prohibited whether made by a foreign-flag fishing or cargo vessel.

In support of our interpretation that the geographical scope of the Act includes territorial waters, we rely on the definition of "port" in section 101.1(l), Customs Regulations, which was in effect in substance prior to the passage of the Nicholson Act (*see* section 1.1, Customs Regulations of 1943). Section 101.1(l) defines "port" to include a Customs district. In Alaska, the district, Number 31, comprehends the territory of the State of Alaska (section 101.3(b), Customs Regulations). The State of Alaska includes its territorial waters (48 U.S.C. ch. 2). (*See also* sections 4.6(b) and 101.1(b), Customs Regulations).

"Territorial waters", as defined by the Coast Guard in 33 CFR 2.05–25, are composed of the three mile territorial sea, the internal waters of the United States that are subject to tidal influence; and those internal waters that are not subject to tidal influence but are or have been used, or are or have been susceptible for use, by themselves

or in connection with other waters, as highways for substantial interstate or foreign commerce. This definition is consistent with the statutory definition of "port", for importation purposes, 19 U.S.C. 232, the predecessor to which, section 2767 of the Revised Statutes, has been in effect since 1873–1874. Section 232 defines "port" to include any *place* from which merchandise can be shipped for importation. (*See Petrel Guano Co.* v. *Jarnette*, 25 F. 675, 677 (C.C.E.D.N.C. 1885)).

That a "transshipment" is a "landing", an activity within the meaning of the Act, was established in a Customs Service decision abstracted as T.D. 68–206(2). That decision also established that the Act applies whether or not fish or fish products otherwise subject to the Act are transshipped for export. Both of these prohibitions are based on the rationale that the proscription of the Act is not limited by its terms to an unlading of fish or fish products for any particular purpose or purposes. To hold otherwise would permit foreign-flag catching vessels to enter a U.S. port or place for transshipment or unlading for export, purposes not permitted by R.S. 4311 and 19 CFR 4.96(b). This result, which would diminish the privileges of the American fisheries reserved to certain U.S. vessels, clearly is not intended by the Act, the purpose of which is to strengthen, rather than weaken, the already existing constraints on the use of foreign vessels in the American Fisheries. We find further support for our conclusion in the decision that a "transshipment" is a "landing", in the context of a statute relating to the importation of merchandise, reached by the court in *The Fame*, 8 F. Cas. 982, 984 (D. Mich. 1858) (No. 4,633).

Any "landing" in violation of the Act would be considered an introduction of merchandise into the United States contrary to law and would subject the vessel involved to the penalty of seizure and forfeiture (18 U.S.C. 545; and 19 U.S.C. 1595a(a)). Fish or fish products landed in violation of the Act would be subject to forfeiture (18 U.S.C. 545). Every person who assists in the violation would be subject to a penalty equal to the value of the fish or fish products landed (19 U.S.C. 1595a(b)).

Because this activity is prohibited by the Act, it would come within the contemplation of section 1447 of title 19, and the penalties provided by 19 U.S.C. 1453 for unlading merchandise without a permit. Section 1447 prohibits the unlading of merchandise elsewhere than at a port of entry except as provided by the Secretary of the Treasury. Pursuant to the Customs Regulations promulgated under this section, the district director has the authority to permit only merchandise in bulk to be unladen outside a port of entry after entry of the vessel has been made (section 4.35, Customs Regulations). Even assuming that the fish would be considered merchandise

in bulk, the transshipment of the fish outside a port of entry in United States territorial waters would be prohibited by the Act, and the district director could not permit a prohibited act. Therefore any transshipment would occur without a permit, in violation of section 1447.

In addition to the prohibition against the contemplated activity in 46 U.S.C. 251(a), second sentence, the National Oceanic and Atmospheric Administration (NOAA) has informed us by letter, dated November 28, 1980 (correspondence enclosed), that the Fishery Conservation and Management Act prohibits a foreign-flag vessel from transshipping fish taken on the high seas in the fishery conservation zone, under a permit, to another vessel in the territorial seas of the United States. Penalties incurred for a violation of the Fishery Conservation and Management Act would be determined by NOAA.

Because the contemplated activity is prohibited both by the Act and the Fishery Conservation and Management Act, we find it unnecessary to respond to your questions as to the meaning of specific terms in 19 U.S.C. 1447 or to consider additional bases upon which Customs might prohibit the transshipment of fish from one foreign-flag vessel to another in the U.S. territorial sea.

In conclusion, we affirm our previous decision that a foreign-flag cargo vessel which receives fish or fish products derived therefrom, on the high seas, in the fishery conservation zone, from United States-flag catching vessels, and then transships the fish, for direct exportation, in the territorial waters of the United States, would be in violation of the Nicholson Act, 46 U.S.C. 251(a), second sentence. In addition, according to NOAA, this activity would be prohibited by the Fishery Conservation and Management Act (16 U.S.C. 1801 *et seq.*).

(C.S.D. 81-160)

Entry: Basis for Accepting Duty at a Lower Rate in Effect at the Time of the Filing of the Immediate Delivery Papers

Date: January 28, 1981
File: ENT-1-01:CO:R:E:E
715242 M

This ruling reviews a protest against a District Director's decision that a delay by Customs in returning the immediate delivery papers until after the new rate of duty went into effect was not a basis for accepting duty at a lower rate in effect at the time of the filing of the immediate delivery papers.

Issue: Is the delay by Customs in returning to the importer his immediate delivery papers ground for accepting duty at a lower rate in effect at the time when he filed his immediate delivery papers?

Facts: The merchandise involved in this protest is fresh pears which are subject to a lower rate of duty, if entered during the period April 1 through June 30 inclusive of any year, than if entered at any other time of the year. In this case the importer's broker filed an application for immediate delivery for the pears on June 7, 1978. The vessel carrying the pears did not arrive at the port of entry until Saturday, June 24, 1978, however, and the first container was not released until Monday, June 26, 1978. Under section 141.68(a), Customs Regulations, in effect at the time, merchandise could not be considered entered until after its arrival within the limits of the port of entry and the subsequent deposit of estimated duties or subsequent official determination that no deposit was required.

On June 29, 1978, the broker wrote to Customs advising that the Immediate Delivery Permit had not been returned to the broker's office as of June 29. The final portion of the pears was not released until July 7, 1978, and the immediate delivery application papers were not returned to the broker until July 11, 1978. Entry was filed on July 13, 1978, by which time the higher rate of duty was in effect. The importer's attorney contends that under such circumstances the reason the entry could not be filed before June 30, 1978, was due to Customs delay in handling the immediate delivery application papers. It appears that the invoice was attached to these papers and the broker could not prepare the entry without the invoice.

Law and analysis. Title 19, United States Code, Section 1315, provides, in pertinent part, that the rate of duty for an article entered for consumption shall be the rate in effect when the document comprising the entry for consumption and estimated duties are deposited with Customs. The filing of an application for a special permit for immediate delivery is not an entry.

It is also recognized that when an application for a special permit for immediate delivery is filed, there may be a delay in the return of the permit and supporting documentation to the importer or broker. In general, the entry summary must be filed within 10 working days after the application for a special permit for immediate delivery is filed, or the importer is subject to a penalty. In order to assure that importers are not penalized for delays in processing by Customs, it was the policy of the Customs Service at that time that in any case in which the period taken for filing an entry after immediate delivery release exceeds the 10-day period for filing an entry, if the number of days in excess of 10 is equal to or less than the period during which Customs held the

invoices or other papers needed to make entry, penalties for late filing should not be imposed. This policy has since been slightly modified.

This policy with respect to penalties, however, has no application in the present case, which is concerned only with the rate of duty to be applied to an importation. Importers and their brokers must realize that if they file an application for a permit for immediate delivery near the end of a period when articles are subject to a lower rate of duty, the immediate delivery package may not be returned to them for several days. Accordingly, they should either file an entry instead, or be prepared with duplicate invoices and other documentation so that they can promptly file for merchandise released under the immediate delivery procedure a formal entry (now called entry summary) prior to the effective date for the higher rate of duty.

It may be noted that under section 141.68 of the Customs Regulations, as amended by T.D. 79–221, the "time of entry" is specifically defined for various situations, including when merchandise is released under the immediate delivery procedure.

Holding: The "time of entry" for merchandise released under the immediate delivery procedure is the time the entry summary is filed in proper form with estimated duties attached. A delay in filing the entry summary which results from the delay in the return of the immediate delivery package by Customs, is not a basis for deeming entry to have been made at an earlier date. Therefore, the protest is denied in full.

Recent Unpublished Customs Service Decisions

The following listing of recent administrative decisions issued by the Office of Regulations and Rulings, U.S. Customs Service, and not otherwise published, is published for the information of Customs officers and the importing community. Although the decisions are not of sufficient general interest to warrant publication as Treasury Decisions, the listing describes the issues involved and is intended to aid Customs officers and concerned members of the public in identifying matters of interest which recently have been considered by the Office of Regulations and Rulings.

A copy of any decision included in this listing, identified by its date and file number, may be obtained in a form appropriate for public distribution upon written request to the Office of Regulations and Rulings Attention: Legal Reference Branch, Room 2404, U.S. Customs Service, 1301 Constitution Avenue, N.W., Washington, D.C. 20229. These copies will be made available at a cost to the requester of $0.10 per page. However, the Customs Service will waive this charge if the total number of pages copied is 10 or less.

Decisions listed in earlier issues of the Customs Bulletin, through February 2, 1981, are available in microfiche format at a cost of $30.90 ($.15 per sheet of fiche). It is anticipated that additions to the microfiche will be made quarterly and subscriptions are available. Requests for the microfiche now available and for subscriptions should be directed to the Legal Reference Branch. Subscribers will automatically receive updates as they are issued and will be billed accordingly.

Dated: June 1, 1981.

B. JAMES FRITZ,
Director,
Regulations & Information Division.

347-182 O - 81 - 5

Date of decision	File No.	Issue
5- 7-81	105061	Vessels: transportation of construction equipment by a foreign-built foreign-flag barge
5- 7-81	106106	Vessels: whether the operation of a pleasure vessel by a condominium association for use by its members is a use in coastwise trade
5-14-81	105122	Vessels: whether a vessel documented in Panama may be used to carry in the coastwise trade persons who have purchased a stateroom-time-period-unit share in the vessel
5-15-81	106139	Instruments of international traffic: whether the movement of spirits in foreign-manufactured portable tank containers from Midwest U.S. to the U.S. Virgin Islands would be considered domestic
5-15-81	105158	Vessels: whether a Canadian-owned, built, and flagged fish processing vessel may be documented in the U.S. and may process fish in Alaskan waters
5- 6-81	542435	Value: the appropriateness of U.S. value for imported diesel engines for automotive parts where assists have been supplied to the exporter
3-26-81	800154	Classification: plastic laminate sheets (771.43, 774.55)
3-30-81	800195	Classification: nutritional health food supplement (183.05)
3-31-81	800201	Classification: unassembled grain storage bins (653.00)
3-31-81	800206	Classification: blasting caps (755.45), explosives (408.00, 408.04)
3-31-81	800223	Classification: copper-8 quinolinolate (408.16)
3-31-81	800252	Classification: toy figures (737.22, 737.40)
3-24-81	800282	Classification: face mask (386.50, 389.62)
3-31-81	800289	Classification: diesel engines (870.40)
3-31-81	800300	Classification: valve seat and valve guard castings (680.27)
3-30-81	800301	Classification: main body assembly casting for a hydraulic control valve (680.27)
3-31-81	800313	Classification: stabil binders (657.25)
4- 2-81	800319	Classification: ladies knitwear (382.78)
3-26-81	800324	Classification: scouring pad (654.01)
4- 2-81	800328	Classification: die half (674.53)
4-29-81	800343	Classification: ejectors of tear gas (662.50)
4- 2-81	800344	Classification: spring water (166.10)
3-30-81	800349	Classification: man's woven synthetic dress shirt (380.34)
3-30-81	800354	Classification: steel pipe couplings (610.80)
4- 3-81	800357	Classification: plastic drinking cup with built-in straw (772.15)
3-30-81	800359	Classification: copper wool scouring pad (654.10)
4- 7-81	800370	Classification: elastic net slip (378.05)
3-31-81	800371	Classification: plastic telephone holder (774.55)
5- 4-81	800386	Classification: Waikato Mark 3 milk meter (666.00)
4-29-81	800442	Classification: woven textile fabric coated with oil

Date of decision	File No.	Issue
5- 5-81	800448	Classification: veneer and edging material (254.80, 254.-85, 254.70, 256.30)
4-29-81	800455	Classification: steel sections (609.84)
4-29-81	800474	Classification: genuine applehead product (206.98)
5- 5-81	800481	Classification: ceramic strainer core and alloyed interchangeable cutting tools (649.43, 674.50, 531.39)
4-29-81	800482	Classification: steel fan guards (661.06)
5- 5-81	800486	Classification: bone protector (355.25)
4-29-81	800504	Classification: knit wearing apparel (382.69)
4-29-81	800514	Classification: plastic plant watering device (772.15)
4-29-81	800516	Classification: plant mobiles (727.35)
5- 5-81	800520	Classification: boy's woven polyester and cotton shorts (380.84)
5- 5-81	800521	Classification: forged rings (680.37)
4-29-81	800534	Classification: men's woven silk shirt (380.75)
4-29-81	800537	Classification: steel tunnel lining (652.94)
5- 5-81	800544	Classification: self-standing electric, motor-operated shredder (666.00)
5- 5-81	800551	Classification: polar bear rug (791.19)
4-29-81	800566	Classification: scrub brush (750.70)
5- 5-81	800582	Classification: machine tools (674.35, 674.42, 674.53)
5- 4-81	061679	Classification: women's casual thong shoe (700.60)
Not dated	061798	Classification: women's casual, open toe, open back, beachcomber type sandals (700.60)
5- 7-81	064688	Classification: bean bag animals (737.40)
5- 5-81	065009/ 061880	Classification: soft plush-type dog (737.40)
4-21-81	065159	Classification: women's raincoat with stitched down box pleat on pocket (382.04)
5- 4-81	065433	Classification: sweaters composed of textile materials and leather (791.75)
4-17-81	065660	Classification: regulating wheels for centerless grinders (674.53)
5- 5-81	065669	Classification: moon boot shells with no linings (700.60)
4-30-81	065695	Classification: hi-mannan/gluco-mannan diet food supplements (188.38)
4-29-81	065793	Classification: knitted baby sock (374.35)
5-11-81	065862	Classification: "Kung Fu" shoes (700.60)
4-21-81	065884	Classification: home gardening tools (scissors) (650.91)
5- 4-81	065892	Classification: off-grade methanol (427.27)
4-17-81	065981	Classification: high pressure sewer cleaner (662.50, 692.16)
5-11-81	066377	Classification: women's garments with lace collars
5- 5-81	066713	Classification: vinyl skate boot (700.58)
4-17-81	066881	Classification: hot foil stamping machine (678.50)
4-17-81	066885	Classification: silos (511.61)
5- 8-81	068025	Classification: moon boot shells (700.60)
5- 7-81	068026	Classification: moon boot shells (700.60)
5- 7-81	068167	Classification: parts of footwear (two piece plastic upper and molded plastic outersole) (700.58)

Date of decision	File No.	Issue
5–11–81	068259	Classification: boy's protective boot with leg type tie and a unit molded rubber bottom and rubber uppers with nylon overlay (700.60)
5– 4–81	068303	Classification: boot liner (700.95)
5– 5–81	068476	Classification: plastic blanket bags (772.20)
5– 7–81	068506	Classification: bean bag figures of animate objects (737.40)

United States Court of International Trade

One Federal Plaza
New York, N.Y. 10007

Chief Judge

Edward D. Re

Judges

Paul P. Rao
Morgan Ford
Scovel Richardson
Fredrick Landis
James L. Watson
Herbert N. Maletz
Bernard Newman
Nils A. Boe

Senior Judge

Samuel M. Rosenstein

Clerk

Joseph E. Lombardi

Decisions of the United States Court of International Trade

(Slip Op. 81–46)

WAKUNAGA OF AMERICA CO. LTD., PLAINTIFF *v.* UNITED STATES, DEFENDANT

Court No. 79–4–00706

GARLIC AND SOYBEAN MIXTURE

A mixture of garlic in powder form and soybeans in powder form was incorrectly treated as commingled articles subject to separate duties under General Headnote 7 of the Tariff Schedules of the United States.

The treatment of the garlic by aging in alcohol and mixing with soybean powder made the entire mixture classifiable as a prepared vegetable within the meaning of Item 141.81. The preparation was for the purpose of incorporating the garlic into food supplement tablets and capsules.

[Judgment for plaintiff.]

(Decided May 20, 1981)

Glad, Tuttle & White (*Edward N. Glad* at the trial and on the brief) for the plaintiff.

Thomas S. Martin, Acting Assistant Attorney General; *Joseph I. Liebman*, Attorney in Charge, International Trade Field Office, Commercial Litigation Branch (*Susan Cassell* at the trial; *James A. Resti*, on the brief), for the defendant.

WATSON, Judge: The defendant treated these mixtures of garlic in powder form and soybean powder as commingled merchandise under General Headnote 7 of the Tariff Schedules of the United States [1] (TSUS) and subjected them to duty at the highest rate applicable to any part of them. The rate chosen was the 35 percent ad valorem provided under Item 140.60 of the TSUS for garlic reduced to flour.[2]

Plaintiff claims that the importations are properly classified as prepared vegetables under Item 141.81 of the TSUS,[3] dutiable at

---

[1] General Headnote 7(a), TSUS:

7. *Commingling of Articles.* (a) Whenever articles subject to different rates of duty are so packed together or mingled that the quantity or value of each class of articles cannot be readily ascertained by customs officers (without physical segregation of the shipment or the contents of any entire package thereof), by one or more of the following means:

(i) sampling,

(ii) verification of packing lists or other documents filed at the time of entry, or

(iii) evidence showing performance of commerical settlement tests generally accepted in the trade and filed in such time and manner as may be prescribed by regulations of the Secretary of Treasury, the commingled articles shall be subject to the highest rate of duty applicable to any part thereof unless the consignee or his agent segregates the articles pursuant to subdivision (b) hereof.

* * * * * * *

[2] Item 140.60, TSUS, as modified by T.D. 68-9:

Subpart B

Vegetables, dried, desiccated, or dehydrated, whether or not reduced in size or reduced to flour (but not otherwise prepared or preserved):

* * * * * * *

	Reduced to flour:	
140.60	Garlic	35% ad val.

* * * * * * *

[3] Item 141.81, TSUS, as modified by T.D. 68-9:

Subpart C

Vegetables (whether or not reduced in size), packed in salt, in brine, pickled, or otherwise prepared or preserved (except vegetables in subpart B of this part):

* * * * * * *

	Other:	
141.81	Other	17.5% ad val.

the rate of 17.5 percent ad valorem. In the alternative, plaintiff claims that the two components of the importations should have been segregated by weight, with the garlic portion dutiable as first mentioned above and the soybean portion dutiable at the rate of 13 percent ad valorem under Item 140.75 of the TSUS as other vegetables reduced to flour.[4]

The testimony established that the important ingredient in these mixtures is the garlic, which is present in the amount of 19 percent or 34 percent by weight. After harvest the garlic is aged in alcohol, filtered out and concentrated by a vacuum process. That extract, together with garlic powder produced by dehydration, was mixed with soybean powder. All this was done to subdue the garlic odor and permit the garlic to be incorporated into food-supplement capsules and tablets. For that purpose, after importation, it is mixed with brewer's yeast, kelp and alginic acid. It follows that the original mixing of the garlic and soybean powders was not the commingling of separately dutiable importations for which General Headnote 7 was designed. It was part of the process of preparing garlic for use as a food supplement by those who anticipate benefits from its ingestion.

The defendant's position here is similar to the rejected argument made by plaintiff in *Japan Food Corporation* v. *United States*, 57 Cust. Ct. 128, C.D. 2741 (1966), that dried fish and dried seaweed, in a mixture, ought to have been separately treated as commingled merchandise. The result would have been free entry for the seaweed portion, rather than classification of the whole as an unenumerated manufacture. The court, however, distinguished between mere commingling and the process of manufacture of a soup stock powder, a distinction which is relevant to this case.

Here the ingredients are processed and mixed for the purpose of preparing the garlic for its intended use and suppressing what some consider to be its noisome character. The aging and blending in measured proportions is a process of manufacture and results in an article with modified characteristics, differing from those of its separate constituents.

---

[4] Item 140.75, TSUS, as modified by T.D. 68-9:

Subpart B

Vegetables, dried, desiccated, or dehydrated, whether or not reduced in size or reduced to flour (but not otherwise prepared or preserved):

* * * * * * *

Reduced to flour:

140.75 Other ..... 13% ad val-

It is incorrect to treat such blending as a simple commingling. It is more properly characterized as part of the preparation of the garlic, a treatment which results in a prepared vegetable within the meaning of Item 141.81.

Defendant argues that the importation is not otherwise prepared or preserved within the meaning of Item 141.81 and contends that the provision is limited to articles which have been subjected to some process of preservation.

The defendant considers the drying and reduction of the importation to flour, which is clearly a process of preservation, to be germane only to Item 140.60, because of its preference for classification of the "commingled" ingredients under Item 140.60, which speaks specifically of garlic reduced to flour. Yet, if the importation is correctly viewed as a unitary product in which the garlic, in two forms, has been combined with the soybean flour the resulting article is indeed in a preserved condition within the meaning of Item 141.81, and the existence of a specific provision for the separate ingredients is irrelevant.

In any event, the garlic is also prepared within the meaning of Item 141.81. The treatment it has undergone, including aging in alcohol ond blending with soybean powder is a process of preparation. The term "prepared" is not a synonym for "preserved." A distinction was made at least as far back as the early part of this century. *Anderson & Co.* v. *United States*, 6 Ct. Cust. Appls. 108, T.D. 35344 (1915). The word "prepared" has often been used to describe foods containing ingredients which have no effect on preservation. For example, in *B. Westergaard & Co.* v. *United States*, 19 Ct. Cust. Appls. 299, T.D. 44298 (1932) meat balls and fish balls containing a quantity of vegetable binder were held to be classifiable as prepared meat and prepared fish. In *United States* v. *A. Sahadi & Co., Inc.*, 23 CCPA 293, T.D. 48165 (1936) thin sheets of dried apricot pulp were smeared with olive oil and rolled up. They were held to be apricots otherwise prepared or preserved rather than fruit pastes or pulps.

While the cases involving the word "prepared" have arisen in a wide variety of circumstances and could be technically distinguished, the basic fact remains that the word originated and was normally used to describe edible substances which were not in their original, fresh condition and which had been processed or prepared for use by some means. *Lekas & Drivas* v. *United States*, 19 CCPA 389, T.D. 45523 (1932); *Vitelli* v. *United States*, 1 Ct. Cust. Appls. 237, T.D. 31274 (1911). See also, *United States* v. *Conkey & Co.*, 12 Ct. Cust. Appls. 552, T.D. 40783 (1925); *Stone* v. *Downer & Co.* v. *United States*, 17 CCPA 34, T.D. 43323 (1929).

The classification considered correct by this court is not limited to vegetables which have only been preserved. The suggestion to that effect in *Border Brokerage Co. Inc.* v. *United States*, 60 Cust. Ct. 487, C.D. 3437 (1968) conflicted with the recent and remote history of the language and has since been clearly disapproved by our appellate court. *Green Giant Co.* v. *United States*, 61 CCPA 46, 495 F. 2d 775 (1974).

It can be added that if Congress had intended to limit the vegetables covered by this provision strictly to those which had been preserved it need not have used the additional word "prepared." Moreover, the legislative history makes it clear that the linking of the phrase "prepared and preserved" together with the specified processes of preservation was simply the result of the combination of two provisions which were formerly separate and not a restriction of the new provision to preserved vegetables. Tariff Classification Study, Schedule 1, Part 8, page 114 (1960).

For the reasons expressed above the court concludes that this merchandise was incorrectly treated as a commingling of two separately dutiable substances. It should have been considered a single product, which by its contents and processing was properly classifiable as a prepared vegetable. The court's conclusion makes it unnecessary to discuss plaintiff's alternative claim that even if the merchandise was considered to be commingled the defendant should have ascertained the amounts of the two ingredients and separately assessed them with the appropriate duty.

Judgment will enter accordingly.

(Slip Op. 81–47)

ASSOCIATED DRY GOODS CORPORATION, PLAINTIFF *v.* UNITED STATES, ET AL., DEFENDANTS

Court No. 81–4–00375

Memorandum and Order on Plaintiff's Motion for a Preliminary Injunction

[Plaintiff's motion denied.]

(Decided May 21, 1981)

Rode & Qualey, attorneys for plaintiff, by *Michael S. O'Rourke and Patrick D. Gill*, for the plaintiff.

Thomas S. Martin, Acting Assistant Attorney General, for the defendants by *David M. Cohen*, Branch Director, Commercial Litigation Branch and *Velta A. Melnbrencis*, of counsel.

RE, Chief Judge: In this action, plaintiff seeks preliminary and permanent injunctive relief against the imposition of certain import

restraint levels on wool sweaters exported from the People's Republic of China ["China"]. These restraint levels were established by the Committee for the Implementation of Textile Agreements ["CITA"] and are enforced by the United States Customs Service.

The action was commenced on April 13, 1981 by a motion for a preliminary injunction and an application for an order to show cause why the requested injunctive relief should not be granted. The court issued the order to show cause, and an evidentiary hearing was held on April 22, 1981. Defendants' opposition to the requested injunctive relief was combined with a motion to dismiss for failure to state a claim upon which relief can be granted. At the conclusion of the hearing, from the bench, the court denied the motion for a preliminary injunction, and reserved decision on defendants' motion to dismiss. The court further advised the parties that the case would be assigned to a judge who would provide immediate judicial supervision and prompt disposition on the merits.

This action arises out of Section 204 of the Agricultural Act of 1956 ["section 204"], 7 U.S.C. 1854, which authorizes the President to enter into agreements with foreign governments limiting the exportation and importation of agricultural commodities and textile products, and to issue regulations to carry out those agreements.

CITA was established by Executive Orders of the President [1] to supervise the implementation of textile agreements entered into pursuant to section 204. It was also authorized to direct the Commissioner of Customs to take such actions as CITA recommends to carry out the agreements.

On September 17, 1980, the United States and China entered into an Agreement Relating to Trade in Cotton, Wool and Man-Made Fiber Textiles and Textile Products [the "Agreement"]. Paragraph 8 of the Agreement provides in material part:

(a) In the event that the Government of the United States believes that imports from China "classified in any category or categories not covered by Specific Limits are, due to market disruption, threatening to impede the orderly development of trade between the two countries," the United States may request consultations with China with a view towards avoiding such market disruption. At the time of the request, the United States is to provide China with "a detailed factual statement of the reasons and justification" for the request, together with current data, which shows "the existence or threat of market disruption" and the contribution of imports from China to the disruption;

(b) China agrees to consult with the United States within 30 days of receipt of a request for consultations, and both sides agree to make

[1] Ex. Ord. No. 11651, 37 Fed. Reg. 4699 (1972), as amended by Ex. Ord. No. 11951, 42 Fed. Reg. 1453 (1977), Ex. Ord. No. 12188, 45 Fed. Reg. 989 (1980).

every effort to reach agreement on a mutually satisfactory resolution of the issue within 90 days of the receipt of the request;

(c) During the 90-day consultation period, China agrees to hold its exports to the United States in the category or categories subject to the consultations to a level no greater than 35% of the amount entered in the latest twelve-month period for which data are available; and

(d) If no mutually satisfactory solution is reached during the consultations, China will limit its exports in the category or categories under the consultations for the succeeding twelve months to a level of 6% above the level of imports entered during the first twelve of the most recent fourteen months preceding the date of the request for consultations.

Under the Agreement, textiles and textile products are classified according to categories: wool sweaters for men and boys are covered in category 445; wool sweaters for women, girls and infants are covered in category 446. The Agreement does not impose a specific limit upon the importation of category 445/446 merchandise to the United States.

Pursuant to paragraph 8(a) of the Agreement, on October 18, 1980, the United States requested consultations with China with regard to category 445/446 merchandise produced or manufactured in China which was being exported to the United States. A notice of the request was published in the Federal Register on October 27, 1980 [45 Fed. Reg. 70960]. The detailed factual statement, required by paragraph 8(a) of the Agreement, was issued by CITA containing those facts which formed the basis of the United States' request for consultations.

The consultations between the United States and China did not lead to a mutually acceptable solution to the problem of category 445/446 merchandise. Accordingly, CITA decided to establish import restraint levels based upon the formula set forth in paragraph 8 of the Agreement, and to prohibit entry of imports of category 445/446 in excess of 183,706 dozen, representing the combined restraint level for the 90-day consultation period and the succeeding twelve-month period. On January 19, 1981, CITA published a notice ["Notice"] in the Federal Register to that effect [46 Fed. Reg. 5033–4].

The Notice directed the Commissioner of Customs, effective January 19, 1981, and for the period October 19, 1980 through January 16, 1982, to prohibit entry into the United States for consumption and withdrawal from warehouse for consumption of wool textile products in category 445/446, produced or manufactured in China and exported on and after October 19, 1980, in excess of 183,706 dozen.

The 183,706 dozen limit for category 445/446 textile products produced or manufactured in China and exported since October 29, 1980 was filled on February 9, 1981.

After February 9, 1981, plaintiff sought to enter into the United States category 445/446 textile products (wool sweaters) produced or manufactured in China. Pursuant to the Notice, plaintiff's importations were refused, or excluded from entry.

On March 12, 1981, plaintiff filed Protest Nos. 1001–1–002939, 1001–1–002940 and 1001–1–002941 protesting the refusal to release, and exclusion of, or delivery into the United States, of its wool sweaters, pursuant to the Notice. On March 30, 1981, plaintiff filed Protest No. 1001–1–003596 similarly protesting the refusal to release, and exclusion of, or delivery into the United States of certain other wool sweaters. The first three, but not the last, of plaintiff's four protests were denied by the Customs Service before this action was commenced on April 13, 1981.

Plaintiff's motion for preliminary injunction alleges that plaintiff will be irreparably harmed if injunctive relief is not granted and seeks an order: enjoining CITA "from authorizing or permitting establishment of restraint levels for wool textile products in category 445/446, produced or manufactured in rhe People's Republic of China in derogation of the provisions of the Bilateral Textile Agreement signed on September 17, 1980"; directing the Commissioner of Customs to allow entry of all wool textile products in category 445/446 produced or manufactured in China and exported on or after October 19, 1980, without regard to the number of units imported. Alternatively, plaintiff seeks an order enjoining the Customs Service from not allowing entry or withdrawal from warehouse for consumption of wool textile products in category 445/446, produced or manufactured in China, and exported on or after October 19, 1980, up to 237,613 dozen or, in the alternative up to 220,392 dozen.

Plaintiff does not challenge the President's authority to enter into the Agreement, but rather alleges that the Agreement was unlawfully implemented by CITA. More specifically, plaintiff alleges that CITA's request for consultations with China was made without any evidence of market disruption or a threat of market disruption. It therefore contends that: the request for consultations made on October 18, 1980 by CITA was arbitrary, capricious and an abuse of discretion; the Agreement does not authorize CITA to combine, as it did, the restraint and consultation levels in calculating the import restraint level pertaining to category 445/446 imports; and plaintiff was not given advance notice of CITA's request for consultations, nor was it afforded any opportunity to present its views to CITA prior to the request for consultations.

In opposition to the requested injunctive relief, and in support of its motion to dismiss, defendant contends that part of the action should be dismissed since the court has jurisdiction only over those

claims which derive from plaintiff's three denied protests. Defendants also contend that: plaintiff lacks standing to challenge the Agreement or its implementation; the issues raised by plaintiff regarding the Agreement or its implementation are nonjusticiable political questions; the contested actions of CITA and the Customs Service were taken in accordance with law; no violations of plaintiff's procedural due process rights occurred with regard to the request for consultations with China; and plaintiff has failed to state a claim upon which relief may be granted.

This court's recent opinion in *American Air Parcel Forwarding Company, Ltd.* v. *United States*, 1 CIT ——, Slip Op. 81–45 (May 15, 1981), discussed the factors to be considered by the court in deciding a request for interlocutory injunctive relief. *See, Washington Metropolitan Area Transit Commission* v. *Holiday Tours, Inc.*, 559 F. 2d 841 (D.C. Cir. 1977), and *Virginia Petroleum Jobbers Association* v. *F.P.C.*, 259 F. 2d 921 (D.C. Cir. 1958). *See also, S. J. Stile Associates, Ltd.* v. *Dennis Snyder*, 67 CCPA ——, C.A.D. 1261, —— F. 2d —— (1981); *A. O. Smith Corp., et al.* v. *F.T.C.*, 530 F. 2d 515 (3d Cir. 1976).

In *Holiday Tours*, the Court of Appeals for the District of Columbia quoted from the "leading case" of *Hamilton Watch Co.* v. *Benrus Watch Co.*, 206 F. 2d 738, 740 (2d Cir. 1953), which explained:

> To justify a temporary injunction it is not necessary that the plaintiff's right to a final decision, after a trial, be absolutely certain, wholly without doubt; if the other elements are present (i.e., the balance of hardships tips decidedly toward plaintiff), it will ordinarily be enough that the plaintiff has raised questions going to the merits so serious, substantial, difficult and doubtful, as to make them a fair ground for litigation and thus for more deliberate investigation.

The court, in *Holiday Tours*, at 844, also quoted from *Charlie's Girls, Inc.* v. *Revlon, Inc.*, 483 F. 2d 953, 954 (2d Cir. 1973) (per curiam), which phrased the test in the following manner:

> One moving for a preliminary injunction assumes the burden of demonstrating either a combination of probable success and the possibility of irreparable injury or that serious questions are raised and the balance of hardships tips sharply in his favor.

In summarizing the court's position in *Holiday Tours*, Judge Leventhal wrote:

> We believe that this approach is entirely consistent with the purpose of granting interim injunctive relief, whether by preliminary injunction or by stay pending appeal. *Generally, such relief is preventative or protective; it seeks to maintain the status quo pending a final determination of the merits of the suit.* An order maintaining the status quo is appropriate when a serious legal question is presented, *when little if any harm will befall other*

> *interested persons or the public* and when denial of the order would inflict irreparable injury on the movant. There is substantial equity, and need for judicial protection, whether or not movant has shown a mathematical probability of success. *Holiday Tours*, at 844. [Emphasis added.]

In this case, the court has considered the relevant factors as well as the potential harm to other interested parties and the public interest if the court were to restrain the enforcement of the embargo, or quantitative restriction of general application on importations into the commerce of the United States.

In cases which seriously affect the public interest, a court of equity will require a much stronger showing before granting a preliminary injunction than is required when only private interests are at stake. *Virginia Ry. Co.* v. *System Federation*, 300 U.S. 515, 552 (1937). In cases of serious doubt, the discretion of the court must be exercised in a manner that would achieve the larger objectives of the public interest. See, *Hecht Co.* v. *Bowles*, 321 U.S. 321, 331 (1944).

A preliminary injunction should be denied if it will adversely affect the public or other interested parties for which, even temporarily, an injunction bond cannot compensate. *Virginia Ry. Co.* v. *United States*, 272 U.S. 658, 674 (1926). The court should withhold such relief until a final determination of the controversy, even though the delay may be burdensome to the plaintiff. *Yakus* v. *United States*, 321 U.S. 414, 440 (1944). *See also Virginia Petroleum Jobbers Association* v. *F.P.C.*, 259 F. 2d 921, 927 (D.C. Cir. 1958).

Assuming plaintiff has overcome the burden of showing the probability of irreparable harm and the likelihood of success on the merits, or alternatively, that the parties have presented serious questions of law and that the balance of the hardships tips in favor of the plaintiff, the court must still protect the public interest.

On the question of the public interest, defendants maintain that to grant plaintiff's request for relief would adversely affect the ability of the United States to conduct its foreign policy with China and would impede the implementation of this and other bilateral textile agreements.

Defendants further contend that plaintiff has failed to demonstrate that its request for interlocutory relief will not injure the domestic sweater industry. In support of this contention, defendants state that, if the embargo is enjoined and the sweater market peaks and turns downward, the domestic manufacturers will suffer immediate injury due to the lower priced imports from China. These imports will continue to enter the shrinking American market in increased amounts thereby causing the cancellation of domestic orders not purchased with irrevocable letters of credit, and could drive some domestic

manufacturers out of business. It is the defendants' position that in that situation, CITA must take special care to protect the domestic industry from massive imports.

Finally, defendants contend that even during the best of times for the domestic industry, the government must carefully monitor surges in particular categories of imports. Otherwise, when the American market returns to a more normal level of demand following a temporary upswing, the established higher import level may serve as the basis for future imports, to the great detriment of the domestic industry.

Preliminary injunctions are generally granted to preserve the status quo pending final determination of the controversy between the parties. *Holiday Tours*, at 844; *Hunter* v. *Atchison, T. & S.F. Ry. Co.*, 188 F. 2d 294, 298 (7th Cir. 1951). When the granting of a motion for preliminary injunction would give a plaintiff all the advantages which would be obtained as a result of a final favorable adjudication of the controversy, the motion ordinarily should be denied. *Selchow & Righter Co.* v. *Western Printing & Lithographing Co.*, 112 F. 2d 430, 431 (7th Cir. 1940).

In this case the requested injunction sought is against the enforcement of a quantitative restriction of general application on importations. Hence the plaintiff does not seek to preserve the status quo, but rather seeks to change it for its own pecuniary advantage. It is equally clear that a change would necessarily involve the temporary lifting of the existing restriction to permit plaintiff's importations to enter the stream of commerce throughout the United States. The market disruption repercussions are impossible to calculate in advance. Certainly they would inevitably affect the public interest and those of third parties in ways which could not possibly be compensated by an injunction bond. No bond could indemnify all of the interests affected, directly or indirectly, by the temporary lifting of the quantitative limitations.

The granting of plaintiff's request for an interlocutory injunction would achieve the ultimate relief sought in this action.

In the words of *Holiday Tours*, plaintiff has not shown that "little if any harm will befall other interested persons". Nor has plaintiff shown that the potential harm to the public interest could be, as it was in *American Air Parcel*, "adequately indemnified by a bond". *Ohio Oil Co.* v. *Conway*, 279 U.S. 813, 815 (1929). Consequently, the court has concluded that the public interest and that of third parties outweigh the alleged irreparable injury to plaintiff.

Under all of the circumstances, it is the determination of the court that the plaintiff's request for an interlocutory injunction be denied.

Decisions of the United States Court of International Trade

Abstracts

Abstracted Reappraisement Decisions

DEPARTMENT OF THE TREASURY, *May 26, 1981.*

The following abstracts of decisions of the United States Court of International Trade at New York are published for the information and guidance of officers of the customs and others concerned. Although the decisions are not of sufficient general interest to print in full, the summary herein given will be of assistance to customs officials in easily locating cases and tracing important facts.

WILLIAM T. ARCHEY,
Acting Commissioner of Customs.

DECISION NUMBER	JUDGE & DATE OF DECISION	PLAINTIFF	COURT NO.	BASIS OF VALUATION	HELD VALUE	BASIS	PORT OF ENTRY AND MERCHANDISE
R81/188	Watson, J. May 19, 1981	Ciba Chemical & Dye Corp.	74-4-01021	United States value	U.S. selling prices, less 1% cash discount as determined by customs officer at time of appraisement; less amounts shown in column III of schedule of appraisement and claims attached to decision and judgment representing profit and general expenses usually made in U.S. on sales of dyestuffs of same class or kind; less costs of transportation and insurance from place of shipment to place of delivery in amounts determined by Customs officer at time of appraisement; divided by 1.40 or such other factor applied by customs officer, to allow for customs duties payable on imported dyestuffs	U.S. v. Geigy Chemical Corporation et al. (C.A.D. 1155)	New York Benzenoid dyestuffs

DECISION NUMBER	JUDGE & DATE OF DECISION	PLAINTIFF	COURT NO.	BASIS OF VALUATION	HELD VALUE	BASIS	PORT OF ENTRY AND MERCHANDISE
R81/189	Watson, J. May 19, 1981	Ciba Chemical & Dye Corp.	74-11-02109	United States value	U.S. selling prices, less 1% cash discount as determined by customs officer at time of appraisement; less amounts shown in column III of schedule of appraisement and claims attached to decision and judgment representing profit and general expenses usually made in U.S. on sales of dyestuffs of same class or kind; less costs of transportation and insurance from place of shipment to place of delivery in amounts determined by Customs officer at time of appraisement; divided by 1.40 or such other factor applied by customs officer, to allow for customs duties payable on imported dyestuffs	U.S. v. Geigy Chemical Corporation et al. (C.A.D. 1155)	New York Benzenoid dyestuffs

R81/190	Watson, J. May 19, 1981	Ciba-Geigy Corporation	74-3-00607	United States value	U.S. selling prices, less 1% cash discount as determined by customs officer at time of appraisement; less amounts shown in column III of schedule of appraisement and claims attached to decision and judgment representing profit and general expenses usually made in U.S. on sales of dyestuffs of same class or kind; less costs of transportation and insurance from place of shipment to place of delivery in amounts determined by customs officer at time of appraisement; divided by 1.40 or such other factor applied by customs officer, to allow for customs duties payable on imported dyestuffs	U.S. v. Geigy Chemical Corporation et al. (C.A.D. 1155)	New York Benzenoid dyestuffs

DECISION NUMBER	JUDGE & DATE OF DECISION	PLAINTIFF	COURT NO.	BASIS OF VALUATION	HELD VALUE	BASIS	PORT OF ENTRY AND MERCHANDISE
R81/91	Watson, J. May 19, 1981	Ciba-Geigy Chemical & Dye Corp.	74-10-02967	United States value	U.S. selling prices, less 1% cash discount as determined by customs officer at time of appraisement; less amounts shown in column III of schedule of appraisement and claims attached to decision and judgment representing profit and general expenses usually made in U.S. on sales of dyestuffs of same class or kind; less costs of transportation and insurance from place of shipment to place of delivery in amounts determined by customs officer at time of appraisement; divided by 1.40 or such other factor applied by customs officer, to allow for customs duties payable on imported dyestuffs	U.S. v. Geigy Chemical Corporation, et al. (C.A.D. 1155)	New York Benzenoid dyestuffs

R81/192	Watson, J. May 19, 1981	Ciba-Geigy Corporation and Ciba-Geigy Corporation-REN Plastics	75-6-01508	United States value	U.S.selling prices, less 1¢ cash discount as determined by customs officer at time of appraisement; less amounts shown in column III of schedule of appraisement and claims attached to decision and judgment representing profit and general expenses usually made in U.S. on sales of dyestuffs of same class or kind; less costs of transportation and insurance from place of shipment to place of delivery in amounts determined by customs officer at time of appraisement; divided by 1.40 or such other factor applied by customs officer, to allow for customs duties payable on imported dyestuffs	U.S. v. Geigy Chemical Corporation et al. (C.A.D. 1155)	New York Benzenoid dyestuffs

DECISION NUMBER	JUDGE & DATE OF DECISION	PLAINTIFF	COURT NO.	BASIS OF VALUATION	HELD VALUE	BASIS	PORT OF ENTRY AND MERCHANDISE
R81/193	Watson, J. May 19, 1981	Ciba-Geigy Corporation	75-10-02756	United States value	U.S. selling prices, less 1% cash discount as determined by customs officer at time of appraisement; less amounts shown in column III of schedule of appraisement and claims attached to decision and judgment representing profit and general expenses usually made in U.S. on sales of dyestuffs of same class or kind; less costs of transportation and insurance from place of shipment to place of delivery in amounts determined by customs officer at time of appraisement; divided by 1.40 or such other factor applied by customs officer, to allow for customs duties payable on imported dyestuffs	U.S. v. Geigy Chemical Corporation et al. (C.A.D. 1155)	New York Benzenoid dyestuffs

R81/196	Watson, J. May 19, 1961	Geigy Chemical Corporation or its successor Ciba-Geigy Corporation.	74-3-00905	United States value	U.S. selling prices, less 1% cash discount as determined by customs officer at time of appraisement; less amounts shown in column III of schedule of appraisement and claims attached to decision and judgment representing profit and general expenses usually made in U.S. on sales of dyestuffs of same class or kind; less costs of transportation and insurance from place of shipment to place of delivery in amounts determined by customs officer at time of appraisement; divided by 1.40 or such other factor applied by customs officer, to allow for customs duties payable on imported dyestuffs	U.S. v. Geigy Chemical Corporation et al. (C.A.D. 1155)	New York Benzenoid dyestuffs

DECISION NUMBER	JUDGE & DATE OF DECISION	PLAINTIFF	COURT NO.	BASIS OF VALUATION	HELD VALUE	BASIS	PORT OF ENTRY AND MERCHANDISE
R81/195	Watson, J. May 19, 1981	Geigy Chemical Corporation	R65/18426	United States value	U.S. selling prices, less 1% cash discount as determined by customs officer at time of appraisement; less 24.2% representing profit and general expenses usually made in U.S. on sales of dyestuffs of same class or kind; less costs of transportation and insurance from place of shipment to place of delivery in amounts determined by customs officer at time of appraisement; divided by 1.40 or such other factor applied by customs officer, to allow for customs duties payable on imported dyestuffs	U.S. v. Geigy Chemical Corporation et al. (C.A.D. 1155)	New York Benzenoid dyestuffs

R81/198	Watson J. May 19, 1981	Geigy Chemical Corporation	R65/18463	United States value	U.S. selling prices, less 1% cash discount as determined by customs officer at time of appraisement; less 24.2% representing profit and general expenses usually made in U.S. on sales of dyestuffs of same class or kind; less costs of transportation and insurance from place of shipment to place of delivery in amounts determined by customs officer at time of appraisement; divided by 1.40 or such other factor applied by customs officer, to allow for customs duties payable on imported dyestuffs	U.S. v. Geigy Chemical Corporation et al. (C.A.D. 1155)	New York Benzanoid dyestuffs

DECISION NUMBER	JUDGE & DATE OF DECISION	PLAINTIFF	COURT NO.	BASIS OF VALUATION	HELD VALUE	BASIS	PORT OF ENTRY AND MERCHANDISE
R61/197	Watson, J. May 19, 1961	Geigy Chemical Corporation	R65/23785	United States value	U.S. selling prices, less 1% cash discount as determined by customs officer at time of appraisement; less 25.7% representing profit and general expenses usually made in U.S. on sales of dyestuffs of same class or kind; less costs of transportation and insurance from place of shipment to place of delivery in amounts determined by customs officer at time of appraisement; divided by 1.40 or such other factor applied by customs officer, to allow for customs duties payable on imported dyestuffs	U.S. v. Geigy Chemical Corporation et al. (C.A.D. 1155)	New York Benzenoid dyestuffs

R81/198	Watson J. May 19, 1981	Geigy Chemical Corporation	R66/2755	United States value	U.S. selling prices, less 1% cash discount as determined by customs officer at time of appraisement; less 24.2% representing profit and general expenses usually made in U.S. on sales of dyestuffs of same class or kind; less costs of transportation and insurance from place of shipment to place of delivery in amounts determined by customs officer at time of appraisement; divided by 1.40 or such other factor applied by customs officer, to allow for customs duties payable on imported dyestuffs	U.S. v. Geigy Chemical Corporation et al. (C.A.D. 1155)	New York Benzenoid dyestuffs

DECISION NUMBER	JUDGE & DATE OF DECISION	PLAINTIFF	COURT NO.	BASIS OF VALUATION	HELD VALUE	BASIS	PORT OF ENTRY AND MERCHANDISE
R81/99	Watson, J. May 19, 1981	Geigy Chemical Corporation	R66/13741	United States value	U.S. selling prices, less 1% cash discount as determined by customs officer at time of appraisement; less 24.2% representing profit and general expenses usually made in U.S. on sales of dyestuffs of same class or kind; less costs of transportation and insurance from place of shipment to place of delivery in amounts determined by customs officer at time of appraisement; divided by 1.40 or such other factor applied by customs officer, to allow for customs duties payable on imported dyestuffs	U.S. v. Geigy Chemical Corporation et al. (C.A.D. 1155)	New York Benzenoid dyestuffs

best copy available

R81/200	Watson, J. May 19, 1981	Geigy Chemical Corporation	R68/1743	United States value	U.S. selling prices, less 1% cash discount as determined by customs officer at time of appraisement; less 24.2% representing profit and general expenses usually made in U.S. on sales of dyestuffs of same class or kind; less costs of transportation and insurance from place of shipment to place of delivery in amounts determined by customs officer at time of appraisement; divided by 1.40 or such other factor applied by customs officer, to allow for customs duties payable on imported dyestuffs	U.S. v. Geigy Chemical Corporation et al. (C.A.D. 1155)	New York Benzenoid dyestuffs

DECISION NUMBER	JUDGE & DATE OF DECISION	PLAINTIFF	COURT NO.	BASIS OF VALUATION	HELD VALUE	BASIS	PORT OF ENTRY AND MERCHANDISE
R81/201	Watson, J. May 19, 1981	Ciba Chemical and Dye Company	R66/1972	United States value	U.S. selling prices, less 1% cash discount as determined by customs officer at time of appraisement; less 23.5% representing profit and general expenses usually made in U.S. on sales of dyestuffs of same class or kind; less costs of transportation and insurance from place of shipment to place of delivery in amounts determined by customs officer at time of appraisement; divided by 1.40 or such other factor applied by customs officer, to allow for customs duties payable on imported dyestuffs	U.S. v. Geigy Chemical Corporation et al. (C.A.D. 1155)	New York Benzenoid dyestuffs

R61/302	Watson, J. May 19, 1961	Intracolor Corporation	75-10-02757	United States value	U.S. selling prices, less 1% cash discount as determined by customs officer at time of appraisement; less amounts shown in column III of schedule of appraisement and claims attached to decision and judgment representing profit and general expenses usually made in U.S. on sales of dyestuffs of same class or kind; less costs of transportation and insurance from place of shipment to place of delivery in amounts determined by customs officer at time of appraisement; divided by 1.40 or such other factor applied by customs officer, to allow for customs duties payable on imported dyestuffs	U.S. v. Geigy Chemical Corporation et al. (C.A.D. 1155)	New York Benzenoid dyestuffs

DECISION NUMBER	JUDGE & DATE OF DECISION	PLAINTIFF	COURT NO.	BASIS OF VALUATION	HELD VALUE	BASIS	PORT OF ENTRY AND MERCHANDISE
R81/203	Watson, J. May 21, 1981	Geigy Chemical Corporation	R66/2756	United States value	U.S. selling prices, less 1% cash discount as determined by customs officer at time of appraisement; less 24.2% representing profit and general expenses usually made in U.S. on sales of dyestuffs of same class or kind; less costs of transportation and insurance from place of shipment to place of delivery in amounts determined by customs officer at time of appraisement; divided by 1.40 or such other factor applied by customs officer, to allow for customs duties payable on imported dyestuffs	U.S. v. Geigy Chemical Corporation et al. (C.A.D. 1155)	New York Benzenoid dyestuffs

R61/304	Watson, J. May 21, 1961	Geigy Chemical Corporation	R65/9016	United States value	U.S. selling prices, less 1% cash discount as determined by customs officer at time of appraisement; less 38.7% representing profit and general expenses usually made in U.S. on sales of dyestuffs of same class or kind; less costs of transportation and insurance from place of shipment to place of delivery in amounts determined by customs officer at time of appraisement; divided by 1.40 or such other factor applied by customs officer, to allow for customs duties payable on imported dyestuffs	U.S. v. Geigy Chemical Corporation et al. (C.A.D. 1155)	New York Benzenoid dyestuffs

DECISION NUMBER	JUDGE & DATE OF DECISION	PLAINTIFF	COURT NO.	BASIS OF VALUATION	HELD VALUE	BASIS	PORT OF ENTRY AND MERCHANDISE
81/66	Watson, J. May 21, 1981	Geigy Chemical Corporation	80/5047	United States value	U.S. selling prices, less 1% cash discount as determined by customs officer at time of appraisement; less 38.7% representing profit and general expenses usually made in U.S. on sales of dyestuffs of same class or kind; less costs of transportation and insurance from place of shipment to place of delivery in amounts determined by customs officer at time of appraisement; divided by 1.40 or such other factor applied by customs officers to allow for customs duties payable on imported dyestuffs	U.S. v. Geigy Chemical Corporation et al. (C.A.D. 1158)	New York Benzenoid dyestuffs

R81/306	Watson, J. May 22, 1981	Geigy Chemical Corporation	R80/573	United States value	U.S. selling prices, less 1% cash discount as determined by customs officer at time of appraisement; less 38.7% representing profit and general expenses usually made in U.S. on sales of dyestuffs of same class or kind; less costs of transportation and insurance from place of shipment to place of delivery in amounts determined by customs officer at time of appraisement; divided by 1.40 or such other factor applied by customs officer, to allow for customs duties payable on imported dyestuffs	U.S. v. Geigy Chemical Corporation et al. (C.A.D. 1158)	New York Bensenlod dyestuffs

DECISION NUMBER	JUDGE & DATE OF DECISION	PLAINTIFF	COURT NO.	BASIS OF VALUATION	HELD VALUE	BASIS	PORT OF ENTRY AND MERCHANDISE
81/207	Watson, J. May 22, 1981	Geigy Chemical Corporation	R69/5362	United States value	U.S. selling prices, less 1% cash discount as determined by customs officer at time of appraisement; less 28.9% representing profit and general expenses usually made in U.S. on sales of dyestuffs of same class or kind; less costs of transportation and insurance from place of shipment to place of delivery in amounts determined by customs officer at time of appraisement; divided by 1.40 or such other factor applied by customs officer, to allow for customs duties payable on imported dyestuffs	U.S. v. Geigy Chemical Corporation et al. (C.A.D. 1155)	New York Benzenoid dyestuffs

81/206	Watson, J. May 22, 1981	Geigy Chemical Corporation	R69/9215	United States value	U.S. selling prices, less 1% cash discount as determined by customs officer at time of appraisement; less 38.7% representing profit and general expenses usually made in U.S. on sales of dyestuffs of same class or kind; less cost of transportation and insurance from place of shipment to place of delivery in amounts determined by customs officer at time of appraisement; divided by 1.40 or such other factor applied by customs officer, to allow for customs duties payable on imported dyestuffs	U.S. v. Geigy Chemical Corporation et al. (C.A.D. 1155)	New York Benzenoid dyestuffs

DECISION NUMBER	JUDGE & DATE OF DECISION	PLAINTIFF	COURT NO.	BASIS OF VALUATION	HELD VALUE	BASIS	PORT OF ENTRY AND MERCHANDISE
R81/209	Watson, J. May 22, 1981	Geigy Chemical Corporation	R70/1626	United States value	U.S. selling prices, less 1% cash discount as determined by customs officer at time of appraisement; less 28.9% representing profit and general expenses usually made in U.S. on sales of dyestuffs of same class or kind; less cost of transportation and insurance from place of shipment to place of delivery in amounts determined by customs officer at time of appraisement; divided by 1.40 or such other factor applied by customs officer, to allow for customs duties payable on imported dyestuffs	U.S. v. Geigy Chemical Corporation et al. (C.A.D. 1155)	New York Benzenoid dyestuffs

R81/210	Watson, J. May 22, 1981	Geigy Chemical Corporation	R70/5576	United States value	U.S. selling prices, less 1% cash discount as determined by customs officer at time of appraisement; less 31.1% representing profit and general expenses usually made in U.S. on sales of dyestuffs of same class or kind; less cost of transportation and insurance from place of shipment to place of delivery in amounts determined by customs officer at time of appraisement; divided by 1.40 or such other factor applied by customs officer, to allow for customs duties payable on imported dyestuffs	U.S. v. Geigy Chemical Corporation et al. (C.A.D. 1155)	New York Benzenoid dyestuffs

International Trade Commission Notices

Investigations by the United States International Trade Commission

DEPARTMENT OF THE TREASURY, *June 4, 1981.*

The appended notices relating to investigations by the United States International Trade Commission are published for the information of Customs Officers and others concerned.

R. E. CHASEN,
Commissioner of Customs.

(19 CFR Part 201 and Part 207)

PROPOSED REVISIONS TO THE GENERAL PROCEDURES FOR THE CONDUCT OF INVESTIGATIONS AND THE SPECIFIC PROCEDURES FOR THE CONDUCT OF INVESTIGATIONS OF WHETHER INJURY TO DOMESTIC INDUSTRIES RESULTS FROM IMPORTS SOLD AT LESS THAN FAIR VALUE OR FROM SUBSIDIZED EXPORTS TO THE UNITED STATES

AGENCY: United States International Trade Commission.

ACTION: Proposed revisions of procedural rules.

SUMMARY: The proposed rules set forth changes and clarifications for the conduct of Commission investigations under section 303 and Title VII of the Tariff Act of 1930 (19 U.S.C. 1303 and 2501 *et seq.*) and sections 102 through 107 of the Trade Agreements Act of 1979 (Pub. L. 96–39, 93 Stat. 144). Several of the proposed changes in the procedural rules would affect the conduct of all investigations under the Commission's jurisdiction, including investigations carried out pursuant to the Tariff Act of 1930, the Agricultural Adjustment Act, and the Trade Act of 1974.

Comments are requested on any and all aspects of the rules for conducting antidumping and countervailing duty investigations and, especially, on the proposed changes set forth.

DATE: Comments on the proposed revisions to the procedural rules must be submitted on or before (45 days from the date of publication in the Federal Register).

ADDRESS: Comments and suggestions concerning the proposed revisions should be submitted to the Secretary, U.S. International Trade Commission, 701 E Street NW., Washington, D.C. 20436.

FOR FURTHER INFORMATION CONTACT: Jack Simmons, Esq., Office of the General Counsel, U.S. International Trade Commission, 701 E Street NW., Washington, D.C. 20436, telephone 202–523–0350.

SUPPLEMENTARY INFORMATION: The Trade Agreements Act of 1979 (Pub. L. 96–39, 93 Stat. 144) approves and implements trade agreements negotiated by the United States in the Tokyo round of Multilateral Trade Negotiations. Upon acceptance by the United States of the negotiating instruments relating to subsidies and countervailing measures and to dumping and antidumping measures, the Trade Agreements Act has brought about extensive changes in U.S. countervailing duty and antidumping duty laws, primarily through amendment of the Tariff Act of 1930.

In order to implement procedures to carry out the provisions of the Trade Agreements Act, the U.S. International Trade Commission published proposed procedural rules in the Federal Register of October 15, 1979 (44 FR 59392). Following an analysis of the comments received, the Commission promulgated procedural rules effective January 1, 1980, and published a notice thereof in the Federal Register of December 26, 1979 (44 FR 76458). On August 27, 1980, the Commission published a notice in the Federal Register (45 FR 57148) that on the basis of the administrative experience since January 1, the Commission was considering proposing amendments to specific portions of the rules. The notice requested public comments suggesting changes in the rules. Those comments are discussed below.

In order to present the proposed changes, whether suggested by the Commission and its staff or by public comment, a discussion by subject matter rather than a section-by-section analysis is most appropriate. Each proposal is discussed below.

NUMBER OF COPIES OF COMPLAINT OR PETITION

It is proposed that the number of copies of the complaint or petition filed with the Commission be changed from 19 to 14. It is also proposed that an additional copy be served on each person named in the complaint as engaging in the act complained of. With recent experience in these investigations as a guide, compliance with this rule should entail no more than four or five additional copies, under normal

circumstances. These changes will be carried out by amending §§ 201.8(d) and 210.10(a).

FILING OF DOCUMENTS

In order to eliminate confusion about public and confidential versions of a document, it is proposed that the requirement of an original and 14 copies refer specifically to the confidential version. The submitter of a document would be required to submit at least one copy, with confidential information deleted, for public inspection. The petition will not be considered "properly filed" until, among other requirements, the requisite number of copies is filed. These changes will be carried out by amending §§ 207.10 and 201.8(d).

CERTIFICATE OF SERVICE

The Commission proposes that a certificate of service be required for each document. Any document submitted to the Secretary which does not contain a certificate of service would not be accepted for filing. These changes will be carried out by adding a new subsection 201.16(b)(3) and by amending subsection 201.16(c).

PARTIES

Since the Commission proposes to require certificates of service, it is necessary to define "party." It is proposed to define "party" as any person with a proper interest in the subject matter of the investigation, including an "interested party" as used in Title VII, who files a notice of participation with the Secretary. The notice must state that the person has an interest in the subject matter of the investigation and intends to file a brief therein. It is hoped that by limiting the term "party" in this way, only those persons who have a direct interest in the investigation will become parties. All notices would be screened by the Chairman or other person to preside at the hearing.

It is proposed that the notices must be received at least 3 weeks prior to the date set for a hearing, or 3 weeks prior to the date on which prehearing briefs are due, or on the date a prehearing conference is scheduled, whichever occurs first. The Secretary would then prepare a service list containing the names and addresses of all the parties or their representatives. A late-filing provision is also proposed.

To accomplish these purposes, a new definition of "party" would be added as § 201.2(i) and § 207.2(i) would be deleted. § 201.13 would be redrafted in its entirety to relate to participation in investigations. The material currently in § 201.13 relating to hearings, as discussed *infra*, would be amended and moved to § 201.12.

STATEMENTS, BRIEFS, AND TESTIMONY

It is proposed that the term "statement" not be used in the rules, and that the terms "brief" and "testimony" be used exclusively. The proposed changes would occur in §§ 207.15, 207.22, 207.23, 207.24, and 210.12(d).

It is also proposed that prehearing briefs in 120-day final dumping or countervailing duty investigations be filed 10 days after service of the prehearing staff report. The current provision for 15 days appears to consume too large a portion of the final 45 days of an investigation. It further appears that, given their knowledge of the facts and issues in each case, the change should cause relatively little hardship on the parties. This change would be reflected in § 207.22.

PREPARED TESTIMONY

Given the apparently redundant nature of prepared testimony, as that term is currently used in Commission practice, the Commission is proposing to abolish prepared testimony in antidumping and countervailing duty cases. Although parties would be encouraged to have carefully prepared remarks ready for the Commission's hearing, a prohibition on prepared testimony would do away with lengthy documents, which could not be covered during the course of a hearing and which appear to be more like an additional prehearing brief rather than testimony.

The Commission is also proposing an exception to the rule to permit participants in a hearing to present graphs or other explanatory material to illustrate an argument or to clarify a matter in contention. A limit of five double-spaced pages is proposed.

Finally, it is proposed that each party submit a list of the witnesses it plans to call to testify at the hearing at least 3 business days before the hearing.

These changes would be accomplished by amendments to § 201.12(d).

DATE OF INSTITUTION OF FINAL INVESTIGATION

It is proposed that the date established by the Trade Agreements Act for the institution of final countervailing duty or antidumping investigations be deemed the date on which the transmittal from the administering authority is received by the Secretary or the date on which the determination is published in the *Federal Register*, whichever occurs first. This proposal would be made by adding a new § 207.20(a) and redesignating the current § 207.20(a) as § 207.20(b).

APPEARANCE AT HEARINGS

The Commission proposes that, to eliminate ambiguity, the material regarding hearings in § 201.13 be revised and relocated in § 201.12(d). It is also proposed to state explicitly that the Chairman or the presiding officer at the hearing may determine who may appear. In cases where persons other than parties wish to appear, the Chairman could decide whether a sufficient showing of interest has been made. In certain cases—the appearance of Members of Congress, representatives of other Government agencies, and interested parties—this sufficient interest should be presumed. This proposal will be carried out by adding a new § 201.12(j) based on the current language in § 201.13.

RECOMMENDATION BY THE DIRECTOR OF OPERATIONS

The Commission proposes to amend § 207.16, which specifies that the Director of Operations will make a recommendation in preliminary antidumping and countervailing duty investigations. The rule was originally drafted because a recommendation was thought useful, since the Director of Operations conducts the preliminary investigation and is closest to it. The Commission no longer believes the formal recommendation is necessary. Thus, the proposed rule would only require the Director of Operations to prepare for the Commission a written summary of the information and arguments submitted by the parties at, or prior to, the conference, if one is held. This procedure will retain the advantage of having the person closest to the conference highlight the issues and the critical facts of record, without the need to form preliminary legal conclusions for the Commission. No comments were received regarding this proposal.

However, several comments urged the Commission to retain the general delegation to the Director of Operations of the duty to conduct preliminary investigations. The comments argued that due to the professionalism of the Commission's staff, the short time limits involved, and the fact that the preliminary determination of reasonable indication of injury does not result in final Commission action, the procedure is appropriate and efficient. In general, the Commission finds these comments persuasive and does not now propose to change the general delegation to the Director of Operations.

SERVICE OF DETERMINATIONS

It is proposed that §§ 207.18 and 207.28 be amended to require that the Secretary "serve" all parties with copies of Commission actions.

PROTECTIVE ORDERS; IN-HOUSE COUNSEL

Section 777 of the Tariff Act of 1930 (19 U.S.C. 1677f) deals with confidential business information. Subsection (b) provides that information submitted to the Commission in confidence may not be released by the Commission without the consent of the submitter. Subsection (c), however, permits the release of confidential information under protective order, and authorizes the Commission to establish such requirements as it may determine by regulation to be appropriate to control such disclosure. Pursuant to this authority, the Commission promulgated § 207.7 of its Rules of Practice and Procedure (19 CFR 207.7). This section has functioned very well, except for extensive criticism of the provision limiting access to confidential information to retained counsel.

Section 207.7 is designed to provide carefully limited access to confidential information by attorneys representing parties to Title VII investigations. The underlying purpose of § 207.7 is to permit counsel to present arguments to the Commission based on certain confidential price information, in addition to the information available in the public record. The Commission sought to preserve the integrity of that confidential information by insuring that it not be made available to the business competitors of the submitter. That is, the information would be made available to the attorney but not to the client. Therefore, in order to insure an "arm's length" relation between attorney and client, the Commission elected to prohibit the disclosure of information under protective order to "in-house counsel"—not because of distrust, but because the attorney may be, by virtue of his corporate position, the client. In addition, the Commission believes that shielding the confidential business information of a submitter from its competitors encourages voluntary compliance with Commission questionnaires and other requests for information.

The limitation was criticized by law departments of many corporations and several bar associations. Many comments stated that all attorneys, whether employed by corporations or by law firms, are members of the bar. All attorneys are subject to the highest standards of professional responsibility, and are subject to disciplinary proceedings by the appropriate licensing authorities for any breach of those standards. Failure to abide by the provisions of a protective order is clearly a ground for instituting disciplinary proceedings.

These comments are very persuasive. The Commission, in originally proposing and promulgating § 207.7, did not mean to imply that corporate counsel are in any way less trustworthy or professional

than retained counsel. It meant no disparagement of attorneys who are staff employees of corporations. As several comments stated, this is a distinguished segment of the bar, and many of the foremost attorneys in this country are employees of respected corporations.

As a result of those comments, the Commission has undertaken a search for a workable alternative to the current language. In its notice of August 27, 1980 (45 FR 57148), the Commission proposed a new standard for release of information under protective order, one which eliminated the distinction between in-house and retained counsel. It was proposed to limit disclosure to those counsel, corporate or retained, who do not advise "operating departments."

This proposal was criticized as vague and unworkable, since the term "operating departments" does not provide meaningful guidance; there would be inevitable disputes over what constitutes an operating department. The Commission has found this argument persuasive, and for this reason has not proceeded with the proposal. As a result, the Commission did not need to evaluate the merits of other objections to the proposed rule, and is exploring alternatives.

In so doing, the Commission's goals remain unchanged: (i) To gather the confidential business information needed in the course of its investigations; (ii) to scrupulously protect that confidentiality; and (iii) to encourage the voluntary submission of such information. In addition, because the time limits imposed by statute for these investigations are so short, usually 45 or 120 days, the rule should be self-executing. The Commission fears that it might not have time to conduct a proceeding and reach an informed, reasoned determination as to who should have access to confidential information under a protective order. Most important, the final formulation must insure that persons who have access to the information will not, even inadvertently, permit confidential information to be made available to their clients.

Thus, the issue faced by the Commission has nothing to do with the professionalism, trustworthiness, and ethics of one segment of the legal profession as compared with another; rather, the central issue is how best to guard against potential improper use of information. The Commission's task, therefore, is one of separating two distinct functions: that of legal advisor and that of corporate official. When the attorney is acting as an official of the client, instead of its legal advisor, the efficiency of the protective order is greatly diminished or nullified. Since no person can completely compartmentalize relevant information, it would be illusory to expect any person with access to confidential business data of another to be able to disregard that information

when giving advice. Even the refusal to give advice could be a meaningful statement.

In this context, several comments noted that the very fact that corporate attorneys are employed full time by their clients lends itself to potential misuse of critical information. In-house counsel meet regularly with the personnel of the corporation on day-to-day matters and may, no matter how inadvertently, use the information in a context other than that of antidumping or countervailing duty investigations. This problem may reach critical proportions when in-house counsel, after receiving a competitor's confidential pricing information, is consulted on his own firm's pricing decisions.

Therefore, the Commission proposes a protective order rule which permits access to confidential information under protective order by any attorney, whether corporate counsel or retained counsel, who certifies under oath to the Commission that, in addition to the other protective order restrictions, he does not participate in the determination of the price of his client's products nor give advice regarding the pricing of his client's products. Because the confidential information generally released in these investigations relates to domestic prices, access to pricing information under protective order would be inconsistent with the protection of confidential information when the attorney advises on pricing decisions.

This formulation appears to offer several advantages. First, it is self-executing. Second, it is directed specifically at shielding that information which is actually released by the Commission under protective order and which is considered most sensitive—prices. Finally, it is an unambiguous formulation, providing a bright-line distinction that is immediately understood. The specific language appears in the proposal.

The Commission is considering three alternatives to this proposal. Depending on comments from the public and its own analysis, the Commission will select one of the four for its final rule. For ease of discussion, we will refer to the Commission's proposal as alternative A. The others will be denominated alternative B, alternative C, and alternative D.

Alternative B. This alternative would retain the current prohibition on the release of confidential business information to in-house counsel. The only change would be to redesignate "in-house counsel" as "corporate counsel." In other words, current practice would be retained.

Alternative C. This alternative would eliminate the phrase "except in-house counsel." Any attorney would be entitled to access to confidential business information under protective order without regard to his relation to his client.

Alternative D. This alternative, even though it does not appear to conform to the goal of being self-executing, was suggested in a written submission to the Commission by an attorney representing numerous corporate counsel. It would permit access to confidential business information by any attorney unless a submitter of information objected. The person resisting disclosure would need to make a clear showing of a particular competitive injury resulting from disclosure, in which case the Commission may impose additional conditions upon disclosure. This proposal would be carried out by amending § 207.7(a), adding § 207.7(c), and by redesignating §§ 207.7(c)–(e) as §§ 207.7(d)–(f), as follows:

§ 207.7 LIMITED DISCLOSURE . . .

(a) *In general.* Upon request of an attorney of record of a party to the investigation . . . which describes with particularity the information requested, . . . the Secretary will make available confidential information concerning the domestic price and cost of production of the like product submitted by the petitioner or an interested party in support of the petitioner to such attorney under a protective order described in paragraph (b), subject to such restrictions as the Commission may impose under paragraph (c). Such requests shall name every attorney and every person described in subsection (1)(iv) of paragraph (b) to whom such information will be disclosed and a copy of such request shall be served upon the petitioner or interested party whose confidential information is requested in the manner prescribed in § 201.16. Upon filing with the Secretary of an agreement . . .

* * * * * * *

(c) *Additional restrictions on disclosure.* Within five days of the date of service of a request for disclosure of confidential information under paragraph (a), the petitioner or interested party whose confidential information is sought may petition the Commission for an order denying disclosure of specifically identified information to any individual named in the request. If the party resisting disclosure makes a clear showing that it risks a particularized competitive injury as a result of disclosure of such specifically identified information to the challenged individual and the Commission finds the provisions of paragraph (b) to be inadequate as to such individual, the Commission may deny, limit, or impose additional conditions upon the disclosure of such information to such individual.

The Commission specifically requests public comments on each of the four proposals in light of the criteria set forth above.

(19 CFR Part 201 and Part 207)

PROPOSED REVISIONS TO THE GENERAL PROCEDURES FOR THE CONDUCT OF INVESTIGATIONS AND THE SPECIFIC PROCEDURES FOR THE CONDUCT OF INVESTIGATIONS OF WHETHER INJURY TO DOMESTIC INDUSTRIES RESULTS FROM IMPORTS SOLD AT LESS THAN FAIR VALUE OR FROM SUBSIDIZED EXPORTS TO THE UNITED STATES

1. Section 201.2 is amended by adding paragraph (i) to read as follows:

§ 201.2 DEFINITIONS.

* * * * * * *

(i) Except for adjudicative investigations under subchapter C of this chapter, "party" means any person whose notice of appearance has been accepted pursuant to § 201.13(a) or (c). The person who files a complaint or petition on the basis of which an investigation is instituted is hereby deemed a party.

2. In § 201.8, paragraph (d) is revised to read as follows:

§ 201.8 FILING OF DOCUMENTS.

* * * * * * *

(d)(1) *Number of copies.* Except as provided in § 210.10(a), a signed original and fourteen (14) copies of each document shall be filed. In the event that confidential treatment of the document is requested under § 201.6, at least one additional copy shall be filed, in which copy the confidential business information shall have been deleted and which shall have been marked conspicuously "nonconfidential" or "public inspection." The name of the person signing the original shall be typewritten or otherwise reproduced on each copy.

(2) Except as provided in § 210.10(a), a copy of a petition or complaint, or a nonconfidential version thereof, shall also be served by messenger or by first-class mail on each person alleged therein to be committing the acts complained of. Such service shall be attested by a certificate of service as required in § 201.16(b) and (c).

3. Section 201.12 is amended by revising paragraph (d) and by adding paragraph (j) to read as follows:

§ 201.12 CONDUCT OF NONADJUDICATIVE HEARINGS.

* * * * * * *

(d) *Witness lists and prepared testimony*—(1) *Parties. List of Witnesses.* Each party shall file with the Secretary a list of the witnesses it intends to call to testify at the hearing not less than three (3) business days prior to the hearing, unless the Commission

establishes a different date for such submission in its notice of hearing.

(2) *Nonparties.* Persons other than parties who wish to testify at hearing are requested to so notify the Secretary.

(3) *Supplementary material.* Up to five double-spaced pages of supplementary material, other than remarks read into the record, will be accepted for the record. Supplementary material exceeding five pages may be accepted upon a showing of such cause as may be deemed sufficient by the Chairman or other presiding official at the hearing.

* * * * * * *

(j) *Appearance at a hearing*—(1) *Who may appear.* A party may appear at the hearing either in person or by representative. A nonparty who has testimony or arguments that may aid the Commission's deliberations may also appear under such conditions as may be established by the Chairman or presiding officer at the hearing.

(2) *Requests to appear.* Requests to appear shall be filed with the Secretary. Requests shall be filed at least three (3) days in advance of the date set for hearing or by the date set in the notice of the investigation for a preliminary conference whichever shall first occur, except that the Chairman, or presiding officer at the hearing, may waive this requirement for good cause. Witnesses on behalf of persons requesting to appear need not file separate requests to appear.

4. Section 201.13 is revised to read as follows:

§ 201.13 PARTICIPATION IN AN INVESTIGATION AS A PARTY.

(a) *Who may participate.* Any interested person may participate in an investigation as a party, either in person or by representative, by filing a notice of participation with the Secretary. Each notice of participation shall (1) state briefly the nature of person's interest in the subject matter of the investigation and (2) state the person's intent to file briefs with the Commission regarding the subject matter of the investigation. Each notice of participation shall be forwarded to the Chairman or other person designated to conduct the investigation, who shall promptly determine whether the person submitting the notice of participation has a proper interest in the investigation. If it is found that a person does not have a proper interest in the investigation, that person shall be so notified by the Secretary.

(b) *Time for filing.* Each notice of participation must be filed (1) not later than twenty-one (21) days prior to the date of the hearing, or (2) not later than twenty-one (21) days prior to the date established for filing the first prehearing brief, or (3) in the event that the Commission schedules a prehearing conference, not later than such conference or at such conference, whichever shall first occur.

(c) *Late filing.* Any notice of participation filed with the Secretary after the filing date established in § 201.13(b) shall be referred to the Chairman, who shall determine whether to accept such notice for good cause shown by the person desiring to file

the notice. The Secretary shall promptly notify the submitter of the decision.

5. In § 201.16, paragraphs (b) and (c) are revised to read as follows:

§ 201.16 SERVICE OF PROCESS AND OTHER DOCUMENTS.

* * * * * * *

(b) *By a party other than the Commission.*

(1) * * *

(3) When service is by mail, it is complete upon mailing of the document.

(c) *Proof of service; certificate.* Each document served by a party shall include a certificate of service, setting forth the manner and date of such service. The certificate of service shall be deemed proof of service of the document. In the event a document is not accompanied by a certificate of service, the Secretary shall not accept such document for filing and shall promptly notify the offering party.

6. In § 207.2, paragraph (i) is removed and paragraph (j) is redesignated as paragraph (i).

7. In § 207.7, paragraph (a) is revised to read as follows:

§ 207.7 LIMITED DISCLOSURE OF CERTAIN CONFIDENTIAL INFORMATION UNDER A PROTECTIVE ORDER.

(a) Upon request of an attorney of an interested party to the investigation, who certifies under oath that he does not participate in the determination of the prices of his client's products and that he does not give advice regarding the pricing of his client's products, which request (1) describes with particularity the information requested, (2) sets forth the reasons for the request, (3) demonstrates a substantial need for the information in the preparation of his case, and (4) demonstrates that he is unable without undue hardship to obtain the substantial equivalent of the information by other means, the Secretary will make available confidential information concerning the domestic price and cost of production of the like product submitted by the petitioner or by an interested party in support of the petitioner to such attorney under a protective order described in paragraph (b).

* * * * * * *

8. Section 201.10 is revised to read as follows:

§ 207.10 FILING OF PETITION WITH COMMISSION.

Any interested party who files a petition with the administering authority pursuant to section 702(b)(1) or 732(b)(1) of the Act shall, in accordance with section 702(b)(2) or 732(b)(2) of the Act, file copies of the petition, pursuant to § 201.8, with the Secretary on the same day the petition is filed with the administering authority. If the petition complies with the provisions of § 207.11, it will be deemed to be properly filed on the date on which the requisite number of copies of the petition is received by the Secretary. The Secretary shall notify the administering authority of that date.

9. Section 207.16 is revised to read as follows:

§ 207.16 SUMMARY OF CONFERENCE.

The Director shall prepare for the Commission a summary of the information and arguments submitted by the parties in connection with the conference, if one is held.

* * * * * * *

10. Section 207.15 is revised to read as follows:

§ 207.15 WRITTEN BRIEFS AND CONFERENCE.

Any person may submit to the Commission on or before a date specified in the notice of investigation issued pursuant to § 207.12 a written brief containing information and arguments pertinent to the subject matter of the investigation.

* * * * * * *

11. Section 207.18 is revised to read as follows:

§ 207.18 NOTICE OF PRELIMINARY DETERMINATION.

The Secretary shall serve copies of the Commission's preliminary determination under section 703(a) or 733(a) of the Act and of the facts and conclusions of law upon which the determination is based on the petitioner, other parties to the investigation, and the administering authority. The Secretary shall publish a notice of such determination in the *Federal Register*.

* * * * * * *

12. Section 207.20 is amended by redesignating the present text as paragraph (b) and adding paragraph (a) to read as follows:

§ 207.20 INSTITUTION OF INVESTIGATION; NOTICE.

(a) Notice from the administering authority of an affirmative preliminary determination under section 703(b) or 733(b) of the Act and notice from the administering authority of an affirmative final determination under section 705(a) or section 735(a) of the Act shall be deemed to occur on the date on which the transmittal letter of such determination is received by the Secretary from the administering authority or the date on which notice of such determination is published in the Federal Register, whichever shall first occur.

13. Section 207.22 is revised to read as follows:

§ 207.22 PREHEARING BRIEF.

Within ten (10) days after the date of service of the public portion of the staff report by the Commission to the parties, each party may submit to the Commission a prehearing brief. A prehearing brief shall, to the extent possible, refer to the record and shall include:

* * * * * * *

14. In § 207.23, paragraph (b) is revised to read as follows:

§ 207.23 HEARING.

* * * * * * *

(b) *Procedures.* Any such hearing shall be conducted after notice published in the Federal Register. The hearing shall not be subject to the provisions of subchapter II, chapter 5, title 5, United States Code, or to section 702 of that title. Each party shall limit its presentation at the hearing to a nonconfidential summary of the information and arguments contained in its prehearing brief, to a nonconfidential analysis of the information and arguments contained in the prehearing briefs required by § 207.22, and to information not available at the time its prehearing brief was filed.

* * * * * * *

15. Section 207.24 is revised to read as follows:

§ 207.24 POSTHEARING BRIEFS.

Posthearing briefs concerning the information adduced at the hearing may be filed with the Secretary within a time specified by the official presiding at the hearing, provided that no such posthearing brief shall exceed ten (10) pages of textual material, double spaced, on stationery measuring 8½ x 11 inches. In addition, the presiding official may permit persons to file within a specified time answers to questions or requests made by the Commission at the hearing. The Secretary shall not accept for filing posthearing briefs or answers which do not comply with this rule.

16. Section 207.28 is revised to read as follows:

§ 207.28 PUBLICATION OF NOTICE OF DETERMINATION.

Whenever the Commission makes a final determination under section 303 or title VII of the Act, the Secretary shall serve the determination and the facts and conclusions of law upon which the determination is based on the petitioner, other parties to the investigation, and the administering authority. The Secretary shall publish notice of such determination in the Federal Register.

17. In § 210.10, paragraph (a) is revised to read as follows:

§ 210.10 COMMENCEMENT OF PROCEEDINGS.

(a) *Upon receipt of complaint.* A proceeding is commenced by filing with the Secretary to the Commission the original and fourteen (14) true copies of a complaint, plus one copy for each person named in the complaint as violating section 337 of the Tariff Act.

* * * * * * *

By order of the Commission.

Issued: May 20, 1981.

KENNETH R. MASON,
Secretary.

In the Matter of CERTAIN WET MOTOR CIRCULATING PUMPS AND COMPONENTS THEREOF	Investigation No. 337–TA–94

Notice of Prehearing Conference and Hearing

Notice is hereby given that a prehearing conference will be held in this case at 9:00 a.m. on June 29, 1981, in the Dodge Center, Room 201, 1010 Wisconsin Avenue N.W., Washington, D.C., and the hearing will commence immediately thereafter.

The purpose of the prehearing conference is to review the trial memoranda submitted by the parties, to stipulate exhibits into the record, and to discuss any questions raised by the parties relating to the hearing.

The Secretary shall publish this notice in the Federal Register.

Issued: May 21, 1981.

JANET D. SAXON,
Administrative Law Judge.

In the Matter of CERTAIN THERMAL CONDUCTIVITY SENSING GEM TESTERS AND COMPONENTS THEREOF	Investigation No. 337–TA–100

Order

Pursuant to my authority as Chief Administrative Law Judge of this Commission, I hereby designate Administrative Law Judge Janet D. Saxon as Presiding Officer in this investigation.

The Secretary shall serve a copy of this order upon all parties of record and shall publish it in the Federal Register.

Issued: May 22, 1981.

DONALD K. DUVALL,
Chief Administrative Law Judge.

In the Matter of CERTAIN WHEEL LOCKS AND COMPONENTS THEREOF	Investigation No. 337–TA–102

Notice of Investigation

AGENCY: U.S. International Trade Commission.

ACTION: Institution of investigation pursuant to 19 U.S.C. 1337.

SUMMARY: Notice is hereby given that a complaint was filed with the U.S. International Trade Commission on April 16, 1981 and

amended on May 4, 1981, under section 337 of the Tariff Act of 1930 (19 U.S.C. 1337), on behalf of McGard, Inc., 852 Kensington Avenue, Buffalo, New York 14215. The complaint alleges unfair methods of competition and unfair acts in the importation of certain wheel locks and components thereof into the United States, or in their sale, by reason of alleged (1) infringement by said wheel locks of the claims of U.S. Letters Patent 3,241,408, (2) palming off, and (3) false designation of origin. The complaint further alleges that the effect or tendency of the unfair methods of competition and unfair acts is to destroy or substantially injure an industry, efficiently and economically operated, in the United States.

The complainant requests that the Commission institute an investigation; conduct an expedited hearing to determine whether there is reason to believe that there is a violation of section 337; upon the conclusion of said expedited hearing, issue a temporary cease and desist order and a temporary exclusion order prohibiting importation of the articles in question into the United States, except under bond, during this investigation; and, after a full investigation, issue an exclusion order prohibiting the importation of said articles from entry into the United States and a cease and desist order.

AUTHORITY: The authority for institution of this investigation is contained in section 337 of the Tariff Act of 1930 and in section 210.12 of the Commission's Rules of Practice and Procedure.

SCOPE OF THE INVESTIGATION: Having considered the complaint, the U.S. International Trade Commission, on May 13, 1981, ORDERED THAT—

(1) Pursuant to subsection (b) of section 337 of the Tariff Act of 1930, an investigation be instituted to determine whether there is reason to believe that there is a violation and whether there is a violation of subsection (a) of section 337 in the unlawful importation of certain wheel lock combinations and components thereof into the United States, or in their sale, by reason of (1) alleged infringement by said wheel lock combinations and the wheel locks themselves of the claims of U.S. Letters Patent 3,241,408, (2) alleged palming off, and (3) alleged false designation of origin, the effect or tendency of which is to destroy or substantially injure an industry, efficiently and economically operated, in the United States;

(2) For the purpose of this investigation so instituted, the following are hereby named as parties upon which this notice of investigation shall be served:

(a) The complainant is——
McGard, Inc.
852 Kensington Avenue
Buffalo, New York 14215

(b) The respondents are the following persons, alleged to be in violation of section 337, and are parties upon whom the complaint is to be served:

Kyo-Ei Industrial Corp.
41 Nishi-Shimizumachi
Minami-Ku
Osaka, Japan

Superior Industries International Inc.
7800 Woodley Avenue
Van Nuys, California 91405

Mackin Industries
17727 Susana Road
Compton, California 90221

Custom Plating Corp.
C–P Auto Production Division
1636 Bonnie Beach
Los Angeles, California 90063

(c) M. Brooke Murdock, Unfair Import Investigations Division, U.S. International Trade Commission, 701 E Street NW., Washington, D.C. 20436, shall be the Commission investigative attorney, a party to this investigation;

(3) For the investigation so instituted, Donald K. Duvall, Chief Administrative Law Judge, U.S. International Trade Commission, 701 E Street NW., Washington, D.C. 20436, shall designate the presiding officer.

(4) With respect to the complainant's request for expedition of the temporary relief hearing, action on such request is deferred to the presiding officer.

The phrase "wheel lock combinations" has been used in paragraph (1) above on the basis that the claims 1–4 in U.S. Letters Patent 3,241,408 are directed to a wheel lock and claims 5–8 of said patent are directed to the wheel lock in combination with a wrench that cooperates therewith. The latter combination is referred to as "wheel lock combinations."

Responses must be submitted by the named respondents in accordance with section 210.21 of the Commission's Rules of Practice and Procedure (19 CFR 210.21). Pursuant to sections 201.16(d) and 210.21(b) of the rules, such responses will be considered by the Commission if received not later than 20 days after the date of service of the complaint. Extensions of time for submitting a response will not be granted unless good and sufficient cause therefor is shown.

Failure of a respondent to file a timely response to each allegation in the complaint and in this notice may be deemed to constitute a waiver of the right to appear and contest the allegations of the complaint and this notice, and to authorize the presiding officer and the Commission, without further notice to the respondent, to find the facts to be as alleged in the complaint and this notice and to enter

both a recommended determination and a final determination containing such findings.

The complaint, except for any confidential information contained therein, is available for inspection during official working hours (8:45 a.m. to 5:15 p.m.) in the Office of the Secretary, U.S. International Trade Commission, 701 E Street NW., Washington, D.C. 20436, telephone 202–523–0161.

FOR FURTHER INFORMATION CONTACT: M. Brooke Murdock, Unfair Import Investigations Division, U.S. International Trade Commission, telephone 202–523–0113.

By order of the Commission.

Issued: May 22, 1981.

KENNETH R. MASON,
Secretary.

(19 CFR Part 200)

Amendment to Agency Ethics Rules

AGENCY: U.S. International Trade Commission.

ACTION: Notice of proposed rule.

SUMMARY: In order to promote the orderly and efficient conduct of its investigations, the Commission proposes to amend its ethics regulations to allow employees to accept ground transportation in kind, of nominal value, in the course of investigative field trips, from representatives of the industry being investigated.

DATE: Comments must be received by July 15, 1981.

ADDRESS: Comments may be submitted to Michael H. Stein, General Counsel, USITC Ethics Counselor, U.S. International Trade Commission, 701 E Street, NW., Washington, D.C. 20436.

FOR FURTHER INFORMATION CONTACT: Michael B. Jennison, Esq., Deputy Ethics Counselor, Office of the General Counsel, 701 E Street, NW., Washington, D.C. 20436, 202–523–0350.

SUPPLEMENTARY INFORMATION: Executive Order 11222, 3 CFR 306 (1965 Compilation), prohibits Government employees from soliciting or accepting anything of monetary value from any person or corporation that conducts operations or activities regulated by his or her agency, or that has interests that may be substantially affected by performance or nonperformance of official duty. The Order provides, however, that "[A]gency heads are authorized to issue regulations . . . to provide for such exceptions therein as may be necessary and appropriate in view of the nature of their agency's

work and the duties and responsibilities of their employees." The order specifies that agency heads may, for example, permit acceptance of food and other refreshments in the ordinary course of luncheon meetings or on inspection tours. The Commission has long included this exception in its ethics rules. 19 CFR § 200.735–105(b)(2).

The Commission now proposes to alter this exception to allow employees to accept ground transportation of nominal value during the course of investigative field trips. From time to time Commissioners and investigative staff members have need to visit production or manufacturing facilities, distribution centers, or offices of participants in Commission investigations. Field trips are an invaluable, cost-effective adjunct to hearings, questionnaires, and other data gathering methods in helping the Commission gauge the economic impact of imports on domestic industries. Occasionally in the course of field trips, scheduling is tight, the investigator is pressed for time, and the office or facility to be visited is not convenient to public transportation. Allowing employees to accept, for example, a ride in a company car or van from a suburban plant to the airport at the conclusion of an inspection tour may allow more time to see the facility and question officials—perhaps even continuing en route—and avoid the awkward problem of reimbursing the company for the value of the transportation. The Commission feels this is a necessary and appropriate exception to the general prohibition and that no possible appearance of conflict of interest can arise from it. It will apply equally to field trips to facilities of any participant in an investigation; the employee receives nothing of personal value because any transportation expense incurred would be reimbursed by the government; and conversations en route, subject to all *ex parte* rules and investigative record-keeping requirements, are no different in character from any conducted in plants and offices or during luncheon meetings.

The U.S. International Trade Commission proposes to amend 19 CFR § 200.735–105 to read as follows:

(a) Except as provided in paragraph (b) of this section, no employee may solicit or accept . . . any gift . . . or any other thing of monetary value from any person who:

* * * * * * *

(2) Conducts operations or activities that are being investigated by the Commission . . . .

(b) The prohibitions set forth under paragraph (a) of this section shall not apply to:

* * * * * * *

(2) The acceptance of food and refreshments of nominal value on infrequent occasions in the ordinary course of a luncheon or dinner

meeting or other meeting or on a field trip, *and of ground transportation of nominal value in the course of a field trip*, where an employee may properly be in attendance . . . .

Issued: May 27, 1981

KENNETH R. MASON,
Secretary.

Notice of Investigation and Hearing

(TA–203–9)

CERTAIN MUSHROOMS

AGENCY: United States International Trade Commission.

ACTION: Following receipt of a request from the U.S. Trade Representative on May 19, 1981, the Commission on May 28, 1981, instituted investigation No. TA–203–9 under section 203(i)(2) of the Trade Act of 1974 (19 U.S.C. 2253(i)(2) for the purpose of gathering information in order that it might advise the President of its judgment as to the probable economic effect on the domestic industry concerned of the termination of certain of the import relief presently in effect (as specified in the attached letter) with respect to mushrooms, prepared or preserved, provided for in item 144.20 of the Tariff Schedules of the United States (TSUS). Such import relief is provided for in Presidential Proclamation 4801 of October 29, 1980 (45 F.R. 72617).

EFFECTIVE DATE: May 28, 1981.

FOR FURTHER INFORMATION CONTACT: Tim McCarty (202–724–1753).

SUPPLEMENTARY INFORMATION:

Public hearing ordered. A public hearing in connection with this investigation will be held in Washington, D.C., at 10 a.m., e.d.t., on Thursday, July 30, 1981, in the Hearing Room, U.S. International Trade Commission Building, 701 E Street, NW. Requests for appearances at the hearing should be received in writing by the Secretary to the Commission at his office in Washington, no later than the close of business Monday, July 13, 1981.

Prehearing procedures. To facilitate the hearing process, it is requested that persons wishing to appear at the hearing submit prehearing briefs enumerating and discussing the issues which they wish to raise at the hearing. Nineteen copies of such prehearing briefs should be submitted to the Secretary to the Commission no later than the close of business Monday, July 20, 1981. Copies of any prehearing briefs submitted will be made available for public inspection in the Office of the Secretary. While submission of prehearing briefs does not prohibit submission of prepared statements in accordance with

section 201.12(d) of the Commission's *Rules of Practice and Procedure* (19 CFR 201.12(d)), it would be unnecessary to submit such a statement if a prehearing brief is submitted instead. Oral presentations should, to the extent possible, be limited to issues raised in the prehearing briefs.

A prehearing conference will be held on Wednesday, July 15, 1981, at 10:00 a.m., e.d.t., in Room 117 of the U.S. International Trade Commission Building.

Persons not represented by counsel or public officials who have relevant matters to present may give testimony without regard to the suggested prehearing procedures outlined above.

By order of the Commission.

Issued: May 28, 1981.

KENNETH R. MASON,
Secretary.

U.S. TRADE REPRESENTATIVE,
Washington, D.C., May 14, 1981.

Hon. BILL ALBERGER,
International Trade Commission,
Washington, D.C.

DEAR MR. CHAIRMAN: On October 29, 1980, President Carter proclaimed import relief for the domestic mushroom industry and increased the duty for 3 years on imports of prepared or preserved mushrooms classified under item 144.20 of the Tariff Schedules of the United States.

Subsequent to this action, the Governments of Canada, West Germany, and Switzerland and the Commission of the European Communities (on behalf of France) requested exemptions from the increased duty for certain of their mushroom products. These governments argue that their products have special characteristics which remove them from competition with mushrooms produced in the United States. The products for which exemptions have been requested include three types:

1. Frozen battered or breaded mushrooms which are currently imported from Canada. They are processed by washing whole, fresh (usually button) mushrooms, dusting them with flour, and dipping them in batter or bread crumbs. The mushrooms are then deep-fried just long enough to set the batter (approximately 25–30 seconds), frozen, and packed in 4-pound containers. The product is used in restaurants and other institutions, where it is served as a side dish.

2. Mushrooms valued at over $1.60 per pound (drained weight) of the following genera: champignon de Paris (*Psalliota*), chanterelle (*Cantharellus*), cepe (*Boletus*), morel (*Morchella*), and mixed mush-

rooms (*Boletus Luteus, Lactarius Deliciosus, Rozites Caperata, Suillus Grevillei*, and *Suillus Granulatus*). Champignon de Paris are cultivated commercially. Chanterelle, cepe, morel, and mixed mushrooms are harvested from their natural environment in forest areas, principally in Europe.

3. Mushrooms valued over $8.50 per pound (drained weight) of the genus chanterelle (*Cantharellus*) which are harvested solely from their natural environment in forest areas.

In addition, on April 8, I received a letter from the Association of Food Distributors requesting that oriental mushrooms also be exempted from the increased duty on canned mushrooms. This request included straw mushrooms (*Volvariella Volvacea*), golden mushrooms (*Flammulina Velutipes*), oyster mushrooms (*Pleurotus Ostreatus*), and summer oyster mushrooms (*Pleurotus Abalon*).

To assist us in making a decision on how to respond in this matter, I am requesting under Section 203(j)(2) of the Trade Act of 1974, as amended, that the Commission advise the President of its judgment concerning the probable economic effect on the domestic mushroom industry of modifying the import relief to exclude the products cited above. The Commission's advice also should include assessments of:

(1) the extent to which these products compete with domestically-produced mushrooms and mushroom products currently benefiting from the relief action;

(2) an estimate of imports of these products which could be expected over the 3-year period of import relief if they are exempted from the increased duties;

(3) the technical and administrative feasibility of identifying such mushrooms for separate Customs treatment; and

(4) the extent to which mushroom exporting countries may use the tariff exemption on each of these products to circumvent the import relief program.

It would be helpful if the Commission's advice could be submitted as soon as possible, but not later than July 31, 1981.

Very truly yours,

WILLIAM E. BROCK.

Investigation No. TA-203-8

HIGH-CARBON FERROCHROMIUM

Notice of Investigation and Hearing

AGENCY: United States International Trade Commission.

ACTION: Upon its own motion and on the basis of a petition filed on May 15, 1981, on behalf of the Committee of Producers of High-Carbon Ferrochromium (CPHCF), the Commission on May 27, 1981, instituted investigation No. TA–203–8 under sections 203(i)(2) and 203(i)(3) of the Trade Act of 1974 (19 U.S.C. 2253(i)(2) and (i)(3)) for the purpose of gathering information in order that it might advise the President of its judgment as to the probable economic effect on the industry concerned of the extension, reduction, or termination of import relief presently in effect with respect to ferrochromium, containing over 3 percent by weight of carbon, valued less than 38 cents per pound, provided for in item 606.24 (formerly item 607.31) of the Tariff Schedules of the United States (TSUS). Relief in the form of a temporary duty increase described in item 923.18 of the Appendix to the TSUS is provided against imports in Presidential Proclamation 4608 (issued November 15, 1978, 43 F.R. 53701). Import relief presently in effect with respect to such merchandise is scheduled to terminate at the close of business on November 15, 1981, unless extended by the President.

EFFECTIVE DATE: May 27, 1981.

FOR FURTHER INFORMATION CONTACT: Woodley Timberlake, Investigator, telephone (202–523–4618), U.S. International Trade Commission, Room 349, 701 E Street, NW., Washington, D.C. 20436.

SUPPLEMENTARY INFORMATION:

Public hearing ordered. A public hearing in connection with this investigation will be held in Washington, D.C., at 10 a.m., e.d.t., on Wednesday, July 22, 1981, in the Hearing Room, U.S. International Trade Commission Building, 701 E Street, NW. Requests for appearances at the hearing should be received in writing by the Secretary to the Commission at his office in Washington no later than the close of business on Wednesday, July 1, 1981.

Prehearing procedures. To facilitate the hearing process, it is requested that persons wishing to appear at the hearing submit prehearing briefs enumerating and discussing the issues which they wish to raise at the hearing. Nineteen copies of such prehearing briefs should be submitted to the Secretary to the Commission no later the close of business on Friday, July 10, 1981. Copies of prehearing briefs submitted will be made available for public inspection in the Office of the Secretary. While submission of prehearing briefs does not prohibit submission of prepared statements in accordance with section 201.12(d) of the Commission's *Rules of Practice and Procedure* (19 CFR 201.12(d)), it would be unnecessary to submit such a statement if a prehearing brief is submitted instead. Oral presen-

tations should, to the extent possible, be limited to issues raised in the prehearing briefs.

A prehearing conference will be held on Thursday, July 2, 1981, at 10:00 a.m., e.d.t., in Room 117 of the U.S. International Trade Commission Building.

Persons not represented by counsel or public officials who have relevant matters to present may give testimony without regard to the suggested prehearing procedures outlined above.

Inspection of petition. The petition filed in this case is available for public inspection at the Office of the Secretay, U.S. International Trade Commission.

By order of the Commission.

Issued: May 28, 1981.

KENNETH R. MASON,
Secretary.

In the Matter of
CERTAIN HOT AIR CORN POPPERS AND COMPONENTS THEREOF } Investigation No. 337–TA–101

Order No. 1

Pursuant to my authority as Chief Administrative Law Judge of this Commission, I hereby designate Administrative Law Judge Donald K. Duvall as Presiding Officer in this investigation.

The Secretary shall serve a copy of this order upon all parties of record and shall publish it in the Federal Register.

Issued: May 29, 1981.

DONALD K. DUVALL,
Chief Administrative Law Judge.

Index

U.S. Customs Service

Treasury Decisions: T.D. No.

Approved Public Gauger: Commodity Control Services Corporation 81-161
Carrier Bonds 81-163
Consolidated Aircraft Bonds 81-159
Country of Origin Marking—Imported Anchors 81-162
Section 101.3, Customs Regulations, Amended Consolidating Houston and Galveston Ports of Entry; Transferring Jurisdiction Over Morris County, N.J., Clarifies Boundaries of Port Arthur, Texas 81-160

Customs Service Decisions: C.S.D. No.

Aircraft: Report of Arrival Requirements for U.S., Military Aircraft Arriving Foreign With Retired Military Personnel Traveling in Space Available Status 81-152
Bonded Warehouse: Liability of the Importer of Record for Merchandise Stored in a Class 2 Customs Bonded Warehouse 81-151
Classification:
Wood Molding and Turnings Used in Construction of Baby Beds 81-156
Ovaltine Classifiable as an Edible Preparation and Not Malted Milk or an Article of Milk for Tariff Purposes 81-157
Fluorescent Pigments 81-158
Conditions Constituting Violation of 46 U.S.C. 251(a) (The Nicholson Act) When Foreign-Flag Vessels Engage in the Transshipment of Fish Products 81-159
Drawback: Chemical Milling of Titanium Offcuts Constitutes Manufacturing Under 19 U.S.C. 1313(a) 81-153
Entry:
Failure To Produce Missing Documents for Conditionally Free Merchandise 81-155
Basis for Accepting Duty at a Lower Rate in Effect at the Time of the Filing of the Immediate Delivery Papers 81-160
Vessels: Denial of Remission of Duties Assessed Under 19 U.S.C. 1466 on Foreign Repairs Resultant of a Single Act of Negligence 81-154

U.S. GOVERNMENT PRINTING OFFICE : 1981 O - 347-182

DEPARTMENT OF THE TREASURY
U.S. CUSTOMS SERVICE
WASHINGTON, D.C. 20229

OFFICIAL BUSINESS
PENALTY FOR PRIVATE USE, $300

POSTAGE AND FEES PAID
DEPARTMENT OF THE TREASURY (CUSTOMS)
(TREAS. 552)

15/25

Customs Bulletin

Regulations, Rulings, Decisions, and Notices concerning Customs and related matters

and Decisions

of the United States Court of Customs and Patent Appeals and the United States Court of International Trade

Vol. 15 JUNE 24, 1981 No. 25

NEWARK PUBLIC LIBRARY

JUL 3 1981

U. S. GOVT. PUBS.
DEPOSITORY 376

This issue contains

T.D. 81-164 through 81-166
General Notice
Slip. Op. 81-48 and 81-49
Protest Abstracts P81/70 through P81/73
Reap. Abstracts R81/211 through R81/218
International Trade Commission Notice

THE DEPARTMENT OF THE TREASURY
U.S. Customs Service

T 1. 11/3:

NOTICE

The abstracts, rulings, and notices which are issued weekly by the U.S. Customs Service are subject to correction for typographical or other printing errors. Users may notify the U.S. Customs Service, Logistics Management Division, Washington, D.C. 20229, of any such errors in order that corrections may be made before the bound volumes are published.

For sale by the Superintendent of Documents, U.S. Government Printing Office, Washington, D.C. 20402. Price: $2.25 (single copy domestic); $2.85 (single copy foreign). Subscription price: $85.00 a year domestic; $106.25 a year foreign.

U.S. Customs Service

Treasury Decisions

(T.D. 81-164)

Bonds

Approval of a carrier's bond, Customs Form 3587

A bond of a carrier for the transportation of bonded merchandise has been approved as shown below. The approval of the bond is temporary until permanent authority is granted or denied.

Dated: June 9, 1981

Name of principal and surety	Date of bond	Date of approval	Filed with district director/area director/amount
Denton Cartage Co., Inc., P.O. Box 40, Palos Park, Ill.; Motor Carrier; Insurance Co. of North America.	Nov. 12, 1980	Nov. 17, 1980	Chicago, Ill. $35,000

BON-3-03

MARILYN G. MORRISON,
Director,
Carriers, Drawback and Bonds Division.

(T.D. 81-165)

Foreign Currencies—Variances From Quarterly Rate

The following rates of exchange are based upon rates certified to the Secretary of the Treasury by the Federal Reserve Bank of New York, pursuant to Section 522(C), Tariff Act of 1930, as amended (31 U.S.C. 372(c)), and reflect variances of 5 per centum or more from the quarterly rate published in Treasury Decision 81-82 for the following countries. Therefore, as to entries covering merchandise exported on the dates listed, whenever it is necessary for Customs purposes to convert such currency into currency of the United States, conversion shall be at the following rates.

Austria schilling:	
May 25, 1981	Holiday
May 26, 1981	$0.060496
May 27, 1981	.060250
May 28, 1981	.060423
May 29, 1981	.060938
Belgium franc:	
May 25, 1981	Holiday
May 26, 1981	$0.026281
May 27, 1981	.026116
May 28, 1981	.026434
May 29, 1981	.026267
Brazil cruzeiro:	
May 25, 1981	Holiday
May 26–29, 1981	$0.011597
People's Republic of China yuan:	
May 25, 1981	Holiday
May 26, 1981	$0.574977
May 27–29, 1981	.572082
Denmark krone:	
May 25, 1981	Holiday
May 26, 1981	$0.136314
May 27, 1981	.135355
May 28, 1981	.136799
May 29, 1981	.136575
Finland markka:	
May 25, 1981	Holiday
May 26, 1981	$0.229305
May 27, 1981	.229358
May 28, 1981	.229305
May 29, 1981	.229148
France franc:	
May 25, 1981	Holiday
May 26, 1981	$0.180375
May 27, 1981	.180180
May 28, 1981	.181324
May 29, 1981	.179775
Germany deutsche mark:	
May 25, 1981	Holiday
May 26, 1981	$0.428467
May 27, 1981	.426257
May 28, 1981	.430200
May 29, 1981	.429185

Ireland pound:	
May 25, 1981	Holiday
May 26, 1981	$1.5675
May 27, 1981	1.5570
May 28, 1981	1.5730
May 29, 1981	1.5770
Italy lira:	
May 25, 1981	Holiday
May 26, 1981	$0.000864
May 27, 1981	.000859
May 28, 1981	.000861
May 29, 1981	.000863
Japan yen:	
May 25, 1981	Holiday
May 26, 1981	$0.004457
May 27, 1981	.004445
May 28, 1981	.004464
May 29, 1981	.004466
Netherlands guilder:	
May 25, 1981	Holiday
May 26, 1981	$0.385431
May 27, 1981	.383142
May 28, 1981	.386698
May 29, 1981	.385802
Norway krone:	
May 25, 1981	Holiday
May 26, 1981	$0.174764
May 27, 1981	.173913
May 28, 1981	.175439
May 29, 1981	.174095
Portugal escudo:	
May 25, 1981	Holiday
May 26, 1981	$0.016247
May 27, 1981	.016155
May 28, 1981	.016234
May 29, 1981	.016273
Republic of South Africa rand:	
May 25, 1981	Holiday
May 26, 1981	$1.1787
May 27, 1981	1.1745
May 28, 1981	1.1780
May 29, 1981	1.1802

Spain peseta:	
May 25, 1981	Holiday
May 26, 1981	$0.010828
May 27, 1981	.010767
May 28, 1981	.010811
May 29, 1981	.010858
Sweden krone:	
May 25, 1981	Holiday
May 26, 1981	$0.202041
May 27, 1981	.201066
May 29, 1981	.203791
May 29, 1981	.202020
Switzerland franc:	
May 25, 1981	Holiday
May 26, 1981	$0.481696
May 27, 1981	.479386
May 28, 1981	.482439
May 29, 1981	.481742
United Kingdom pound:	
May 25, 1981	Holiday
May 26, 1981	$2.0660
May 27, 1981	2.0600
May 28, 1981	2.0680
May 29, 1981	2.0700

(LIQ-03-01 O:C:E)

Dated: May 29, 1981.

KENNETH A. RICH,
Chief,
Customs Information Exchange.

(T.D. 81-166)

Foreign Currencies—Variances From Quarterly Rate

The following rates of exchange are based upon rates certified to the Secretary of the Treasury by the Federal Reserve Bank of New York, pursuant to Section 522(C), Tariff Act of 1930, as amended (31 USC 372(c), and reflect variances of 5 per centum or more from the quarterly rate published in Treasury Decision 81-82 for the following countries. Therefore, as to entries covering merchandise exported on the dates listed, whenever it is necessary for Customs purposes to convert such currency into currency of the United States, conversion shall be at the following rates.

Austria schilling:	
May 18, 1981	$0.061576
May 19, 1981	.061538
May 20, 1981	.061690
May 21, 1981	.060864
May 22, 1981	.061013
Belgium franc:	
May 18, 1981	$0.026674
May 19, 1981	.026667
May 20, 1981	.026717
May 21, 1981	.026448
May 22, 1981	.026504
Brazil cruzeiro:	
May 18–19, 1981	$0.011809
May 20, 1981	.012095
May 21–22, 1981	.011809
People's Republic of China yuan:	
May 18–20, 1981	$0.576070
May 21, 1981	.578972
May 22, 1981	.573822
Denmark krone:	
May 18–19, 1981	$0.137931
May 20, 1981	.138581
May 21, 1981	.137325
May 22, 1981	.137599
Finland markka:	
May 18, 1981	$0.231107
May 19, 1981	.231616
May 20, 1981	.232099
May 21, 1981	.229885
May 22, 1981	.230150
France franc:	
May 18, 1981	$0.180261
May 19, 1981	.179856
May 20, 1981	.180083
May 21, 1981	.178221
May 22, 1981	.179211
Germany deutsche mark:	
May 18, 1981	$0.433934
May 19, 1981	.433088
May 20, 1981	.435161
May 21, 1981	.430478
May 22, 1981	.431872

Ireland pound:	
May 18, 1981	$1.5880
May 19, 1981	1.5855
May 20, 1981	1.5955
May 21, 1981	1.5717
May 22, 1981	1.5720
Italy lira:	
May 18, 1981	$0.000873
May 19, 1981	.000871
May 20, 1981	.000876
May 21, 1981	.000870
May 22, 1981	.000868
Netherlands guilder:	
May 18, 1981	$0.390472
May 19, 1981	.389560
May 20, 1981	.391389
May 21, 1981	.386997
May 22, 1981	.388954
Norway krone:	
May 18, 1981	$0.175840
May 19, 1981	.175778
May 20, 1981	.176211
May 21, 1981	.175070
May 21, 1981	.175254
Portugal escudo:	
May 18, 1981	$0.016420
May 19–20, 1981	.016461
May 21, 1981	.016064
May 22, 1981	.016340
Republic of So. Africa rand:	
May 20, 1981	$1.1865
May 21, 1981	1.1845
May 22, 1981	1.1818
Spain peseta:	
May 18, 1981	$0.010959
May 19, 1981	.010945
May 20, 1981	.010954
May 21, 1981	.010840
May 22, 1981	.010823

Sweden krone:	
May 18, 1981	$0.204394
May 19, 1981	.203915
May 20, 1981	.204374
May 21, 1981	.203169
May 22, 1981	.203087
Switzerland franc:	
May 18, 1981	$0.487021
May 19, 1981	.485909
May 20, 1981	.488281
May 21, 1981	.481696
May 22, 1981	.482393
United Kingdom pound:	
May 18, 1981	$2.0882
May 19, 1981	2.0765
May 20, 1981	2.0810
May 21, 1981	2.0680
May 22, 1981	2.0725

(LIQ-03-01 O:C:E)

Dated: May 22, 1981.

KENNETH A. RICH,
Chief,
Customs Information Exchange.

U.S. Customs Service

General Notice

Availability of Reprinted Looseleaf Edition of Customs Regulations

AGENCY: U.S. Customs Service, Department of the Treasury.

ACTION: Notice of availability.

SUMMARY: This document informs the public that an updated reprinted looseleaf edition of the Customs Regulations (19 CFR Chapter I) is available from the Government Printing Office. In addition to the Customs Regulations, with a complete up-to-date index, including all changes made through March 31, 1981, the reprint includes Treasury Department and Customs Service Delegation Orders, and an appendix containing the text of, or references to sections of law and the text of regulations administered by other Government departments or agencies and enforced wholly or in part by Customs.

SUPPLEMENTARY INFORMATION:

BACKGROUND

The regulations of the Customs Service, codified in Title 19, Chapter I, Code of Federal Regulations (19 CFR Chapter I), have been issued by the Commissioner of Customs, with the approval of the Secretary of the Treasury, for the purpose of carrying out Customs and navigation laws and other laws administered by Customs.

Title 19, Code of Federal Regulations, is published annually, revised as of April 1 of each year, by the Office of the Federal Register. In the interest of having the regulations as up to date as possible, Customs has the Government Printing Office print a looseleaf edition which is updated by the issuance of sets of revised pages three or four times each year. In addition to the regulations, with a complete up-to-date index, the looseleaf edition also includes orders of the Secretary of the Treasury relating to the rights, privileges, powers, and duties of the Commissioner of Customs and other Customs personnel, and Customs Delegation Orders. An appendix to the looseleaf edition contains the text of, or references to, sections of law and the text of regulations administered by other Government departments or agencies and enforced wholly or in part by Customs.

Two sets of revised pages to the regulations have been issued since the last general reprint was prepared in 1979. As part of an on-going cost-effective program to improve the utility of the regulations, Customs has prepared a new reprint, including all changes through March 31, 1981.

FOR FURTHER INFORMATION OR TO OBTAIN COPIES CONTACT: Superintendent of Documents, U.S. Government Printing Office, Washington, D.C. 20402 (783–3238). Subscribers may order the reprint by requesting the "Customs Regulations of the United States, 1981 Reprint." The renewal rates are $10.00 for current domestic subscribers and $12.50 for current foreign subscribers. The rates for new subscribers are $29.00 for domestic purchasers and $36.25 for foreign purchasers. Orders for the new reprint are being accepted *only* by the Government Printing Office. Copies are not available from the U.S. Customs Service.

While every effort has been made to ensure correctness, users may notify the U.S. Customs Service, Regulations and Information Division, Washington, D.C. 20229, of any typographical or printing errors in order that corrections may be made. Suggestions for improvement also are requested.

DRAFTING INFORMATION

The principal author of this document was Robert J. Pisani, Regulations and Information Division, U.S. Customs Service.

Dated: June 9, 1981.

[Published in the Federal Register June 15, 1981 (46 FR 31398)]

WILLIAM T. ARCHEY,
Acting Commissioner of Customs.

United States Court of International Trade

One Federal Plaza
New York, N.Y. 10007

Chief Judge

Edward D. Re

Judges

Paul P. Rao
Morgan Ford
Scovel Richardson
Frederick Landis
James L. Watson
Herbert N. Maletz
Bernard Newman
Nils A. Boe

Senior Judge

Samuel M. Rosenstein

Clerk

Joseph E Lombardi

Decisions of the United States Court of International Trade

(Slip Op. 81–48)

ALBERTA GAS CHEMICALS, INC., PLAINTIFF *v.* UNITED STATES, DEFENDANT

Court No. 79–8–01295

On Defendant's Motion for Summary Judgment and Plaintiff's Cross-Motion for Summary Judgment

[Plaintiff's cross-motion granted; defendant's motion denied.]

(Dated May 28, 1981)

Freeman, Meade, Wasserman & Schneider, Esqs., for the plaintiff.

Thomas S. Martin, Acting Assistant Attorney General; *David M. Cohen*, Director, Commercial Litigation Branch; and *Shelia N. Ziff*, trial attorney, for the defendant.

NEWMAN, *Judge*. Plaintiff, an importer of methyl alcohol (also known as methanol) from Canada, contests the exclusion of its merchandise from entry by the Regional Commissioner of Customs at the port of New York. Presently before the Court are defendant's motion for summary judgment and plaintiff's cross-motion for summary judgment.

I

The material facts, undisputed, are:

1. On May 2, 1978 the United States Treasury Department ("Treasury") received information in proper form pursuant to the applicable Customs regulations (19 CFR §§ 153.26 and 153.27) from E. I. du Pont de Nemours and Company alleging that methyl alcohol from Canada was being, or is likely to be, sold at less than fair value ("LTFV"); and that such sales were causing, or are likely to cause, injury to an industry in the United States within the meaning of section 201(a) of the Antidumping Act of 1921, as amended (19 U.S.C. § 160(a)).

2. On June 8, 1978 Treasury initiated an antidumping investigation, and on June 14, 1978 the required Antidumping Proceeding Notice appeared in the Federal Register (43 FR 25758).

3. A "Withholding of Appraisement Notice" was published in the Federal Register of December 19, 1978 (43 FR 59196).

4. On March 23, 1979 Treasury determined that methyl alcohol from Canada was being sold in the United States at LTFV within the meaning of the Antidumping Act of 1921, as amended, and that the dumping margins ranged from 9.9 percent to 108.6 percent, with a weighted average margin of 59.2 percent. That determination was published in the Federal Register on March 30, 1979 (44 FR 19090).

5. On June 29, 1979 the United States International Trade Commission ("Commission") by a three to two vote determined in Investigation AA 1921–202 that the domestic methyl alcohol producing industry was likely to be injured by reason of the importation of methyl alcohol from Canada which Treasury had determined was being, or was likely to be, sold at LTFV. The Commission's determination was published in the Federal Register on July 12, 1979 (44 FR 40734).

6. On July 23, 1979 Treasury issued a Finding of Dumping respecting methyl alcohol from Canada (TD 79–210), which finding was published in the Federal Register on July 27, 1979 (44 FR 44154).

7. The subject merchandise was exported from Canada on August 13, 1979 and imported into the United States on the same day. Entry documents (Consumption Entry No. 79–638078–8) and a check for estimated duties were presented by plaintiff to the appropriate Customs officer at the port of New York on August 15, 1979. How-

347-183 0 - 81 - 2

ever, plaintiff was not permitted by Customs to enter its merchandise without posting an antidumping bond (in accordance with 19 U.S.C. § 167 and 19 CFR § 153.50), which plaintiff refused to proffer.

8. On August 15, 1979 the imported merchandise was assigned General Order No. 110–79 and stored in a warehouse.[1]

II

Following the denial of its administrative protest on August 17, 1979, plaintiff commenced the present action alleging that the Regional Commissioner excluded its merchandise from entry and refused to deliver the subject merchandise without the filing of an antidumping bond.

The complaint contests the exclusion of plaintiff's merchandise from entry and delivery "and the legality of all orders and findings of the United States International Trade Commission and of the Secretary of the Treasury entering into the Regional Commissioner's decision". In this connection, plaintiff alleges that the sole ground for the exclusion of the subject merchandise from entry was that plaintiff did not file an Antidumping Bond; and that the sole ground for the Regional Commissioner's demand for a bond was the Secretary's Finding of Dumping. Continuing, the complaint alleges that the Regional Commissioner erred in demanding, under section 208 of the Antidumping Act of 1921, as amended (19 U.S.C. § 167), the posting of an Antidumping Bond (Customs Form 7591), and in excluding the merchandise from entry and delivery to plaintiff in the absence of such bond; that the Secretary's Finding of Dumping is illegal, *ultra vires*, null and void; and that plaintiff is entitled to the entry and delivery of its merchandise without the submission of an Antidumping Bond because no legal and valid Finding of Dumping covers the merchandise. The complaint then sets forth three causes of action, each of which controverts some phase of the antidumping proceedings leading to the Secretary's Finding of Dumping, including the Secretary's LTFV investigation and determination, and the subsequent affirmative determination by the Commission of likelihood of injury. The relief sought by plaintiff in its complaint is an adjudication that the Secretary's Finding of Dumping is illegal, null and void; that the Antidumping Act of 1921 is therefore inapplicable to exportations of methyl alcohol from Canada; and an order that the Regional Commissioner accept plain-

[1] On August 13, 1980 plaintiff brought on an order to show cause why sale of General Order merchandise should not be enjoined, *pendente lite*; and pursuant to the "All Writs Act" (28 U.S.C. § 1651(a)) this Court entered an order on September 22, 1980 enjoining the sale or disposition of the merchandise *pendente lite*. *Alberta Gas Chemicals, Inc.* v. *United States*, 85 Cust. Ct. —, C.R.D. 80-13, 496 F. Supp. 133 (1980).

tiff's entry and deliver the merchandise to plaintiff without filing an antidumping bond. The complaint does not challenge the assessment of any duty nor seek a refund.

Defendant's prior motion to dismiss the action or alternatively for summary judgment was denied by this Court on January 17, 1980. *Alberta Gas Chemicals, Inc.* v. *United States;* 84 Cust. Ct. 217, C.R.D. 80–1, 483 F. Supp. 303 (1980). There, it was determined that pursuant to 28 U.S.C. § 1582(a)(4) this Court has jurisdiction to determine the legality of the exclusion of plaintiff's merchandise from entry for refusal to file an antidumping bond, and the Secretary's underlying finding of dumping. Defendant's alternative motion for summary judgment was held to be premature under Rule 8.2(a) inasmuch as defendant had not then filed an answer. Defendant has since filed its answer to the complaint, and has renewed its motion for summary judgment, which is presently before the Court.

I have concluded that defendant's motion for summary judgment should be denied and plaintiff's cross-motion for summary judgment should be granted.

III

Under section 201(c)(1) of the Antidumping Act of 1921, as added by section 321(a) of the Trade Act of 1974, Pub. L. 93–618, 88 Stat. 1048, effective January 3, 1975 and in effect prior to January 1, 1980, Treasury was required to determine whether to initiate an investigation into the question of whether imported merchandise is being, or is likely to be, sold in the United States or elsewhere at LTFV within thirty days after receipt of specified information.[2] There is no dispute that Treasury received the appropriate information concerning the alleged dumping of methyl alcohol from Canada on May 2, 1978, and did not determine to initiate an investigation until June 8, 1978 (complaint and answer, paragraphs 30 and 35).

Plaintiff, relying heavily upon the legislative history of the 1974 amendment to the Antidumping Act which established the thirty day time limitation in section 201(c)(1),[3] and the subsequent legislative

[2] Section 201(c)(1) (19 U.S.C. § 160(c)(1) (1975)), so far as pertinent reads: "(c)(1) The Secretary shall, within thirty days of the receipt of information alleging that a particular class or kind of merchandise is being or is likely to be sold in the United States or elsewhere at less than its fair value and that an industry in the United States is being or is likely to be injured, or is prevented from being established, by reason of the importation of such merchandise into the United States, determine whether to initiate an investigation into the question of whether such merchandise in fact is being or is likely to be sold in the United States of elsewhere at less than its fair value. If his determination is affirmative he shall publish notice of the initiation of such an investigation in the Federal Register. If it is negative, the inquiry shall be closed."

It should be observed that the Customs Regulations (19 CFR § 153.29) similarly impose a time limitation on publication with respect to initiation of an antidumping investigation.

[3] H.R. Rep. No. 571, 93rd Cong., 1st Sess. 68 (1973); S. Rep. No. 1298, 93rd Cong., 2d Sess. 170 (1974).

history of the Trade Agreements Act of 1979 (which repealed the Antidumping Act of 1921 and replaced it with an entirely new antidumping statute),[4] maintains that the time limitation is mandatory. Accordingly, plaintiff argues, Treasury lacked authority to act on the dumping complaint after the expiration of the thirty day period, and all antidumping proceedings directed against methyl alcohol from Canada were *ultra vires* and void.

Citing certain decisions of the federal Courts of Appeals construing similar statutory time limitations, defendant insist that the time limitation in section 201(c)(1) is not mandatory, but merely directory.

After careful consideration of the legislative history cited by plaintiff and the judicial precedents relied upon by defendant, I conclude that defendant's position is well taken. It is settled that "[a] statutory time period is not mandatory unless it both expressly requires an agency or public official to act within a particular time period *and specifies a consequence for failure to comply with the provision*" (emphasis added). *Usery* v. *Whitin Machine Works, Inc.*, 554 F. 2d 498, 501 (1st Cir. 1977); *Fort Worth National Corporation* v. *Federal Savings and Loan Insurance Corporation*, 469 F. 2d 47, 58 (5th Cir. 1972). *Accord*: *Diamond Match Co.* v. *United States*, 44 Cust. Ct. 67, 74–75, C.D. 2154, 181 F. Supp. 952, 958–59 (1960), *aff'd*, 49 CCPA 52, C.A.D. 796 (1962).

In *Usery*, at page 501, the Court of Appeals commented:

> The first question before us is whether the Act [5] was properly construed as ousting the Secretary [of Labor] of jurisdiction to make an eligibility determination [for worker adjustment assistance] after 60 days had passed following the filing of the petition. We observe that the statute does not specifically address this question. Although Congress clearly desired the expeditious treatment of such petitions, there is nothing in the statute which in any way suggests that the time limitation was designed to be jurisdictional. The Act neither purports to restrain the Secretary from acting after 60 days have passed nor specifies that any adverse consequences follow from the Secretary's failure to comply. In the absence of any such clear indications of Congressional intent that the limitations are to be strictly enforced, courts have uniformly held that the time requirements in statutes such as the one in the case at bar are not jurisdictional.

Similarly, in the present case the statute (section 201(c)(1)) does not specifically address the question of Treasury's jurisdiction to make a determination after the expiration of the thirty day time period.

---

[4] S. Rep. No. 249, 96th Cong., 1st Sess. 61, 63 (1979). Section 732(c) of the Tariff Act of 1930, as amended by the Trade Agreements Act of 1979 (19 U.S.C. § 1673a(c) (1980)) reduced the time limit for making a determination from 30 to 20 days.

[5] The statute involved, 19 U.S.C. § 2273(a), provides that the Secretary of Labor shall determine eligibility for adjustment assistance "[a]s soon as possible after the date on which a petition is filed under section 2271 of this title, *but in any event not later than 60 days after that date*." [Emphasis added.]

Although the legislative history cited by plaintiff shows clearly that Congress desired the expeditious handling of dumping complaints and the timely determination of whether an antidumping investigation should be initiated, to borrow from the Court's language in *Usery* "there is nothing in the statute which in any way suggests that the time limitation was designed to be jurisdictional". Further, "[t]he Act neither purports to restrain the Secretary [of the Treaury] from acting after [30] days have passed nor specifies that any adverse consequences follow from the Secretary's failure to comply". *Ibid.* Here, as in *Usery*, "such clear indications of Congressional intent that the limitations are to be strictly enforced" are absent.

Plaintiff, however, contends that section 201(c)(1) meets the criteria of a mandatory statute for the reason that Congress specified that the inquiry was to be "closed" at the end of the thirty day period if no investigation had been initiated. Such a construction of the statute is plainly a distortion. Indeed, Section 201(c)(1) reads in pertinent part:

> If his [the Secretary's] determination is affirmative he shall publish notice of the initiation of such an investigation in the Federal Register. *If it is negative, the inquiry shall be closed.* [Emphasis added.]

As may be seen, the statute provides that the inquiry shall be closed, not as a consequence of the Secretary's failure to make a determination within a specified time, *but only if the Secretary's determination is negative*. It logically follows, therefore, that until such negative determination is made, the inquiry remains open. There is nothing in the provision which remotely suggests that the inquiry is automatically closed at the end of the thirty day period if no determination has been made to initiate an investigation, as urged by plaintiff. The closing of the inquiry upon a negative determination was intended neither as a penalty nor as an adverse consequence, but merely to give finality to the investigation so that the complaining or other domestic producer would then, upon notification of termination, have an opportunity to challenge the Secretary's negative determination.

While admittedly the purpose of the amending provisions of the Trade Act of 1974 respecting the thirty day time limitation was to expedite antidumping proceedings, it is difficult to believe that Congress could have intended to penalize the complaining domestic producer and deny it the protection afforded by the Antidumping

Act solely because of "administrative footdragging".[6] *Cf. Usery*, 554 F. 2d at 502. Surely, such result would completely thwart the very purpose of the 1974 amendment.

Although Treasury's failure in this case to comply with the statutory time limit is not condoned, I am constrained to hold that Treasury was not ousted of jurisdiction by reason of its failure to make a determination to initiate an investigation within the thirty day time period specified in section 201(c)(1). Accordingly, I conclude that Treasury's determination to initiate an investigation eight days after the expiration of the thirty day time period and its subsequent action in the antidumping proceedings was not *ultra vires*, as urged by plaintiff.

IV

We turn to plaintiff's claim that Treasury's LTFV determination (44 FR 19090) is arbitrary, unreasonable and contrary to law. Specifically, plaintiff asserts that in computing dumping margins Treasury improperly compared the prices of Alberta Gas Chemicals, Limited (AGCL) to United States co-producers with AGCL's prices to Canadian formaldehyde producers, without adjustment for the difference in the commercial level of trade and in disregard of the contemporaneous and more comparable sales by AGCL to a third country co-producer, thus producing an unreasonable weighted average margin of dumping.[7]

Defendant contends that 19 CFR § 153.15 precludes the use of third country sales as a basis for making level of trade comparisons for fair value purposes. In making price comparisons, sales to United States co-producers were compared with sales in the home market to producers of formaldehyde because there were no sales of methyl alcohol by AGCL to co-producers in Canada. Thus, the Notice of Determination states, in pertinent part (44 FR 19091):

> Respondent maintained that sales to a third-country co-producer should be used as the basis for comparing prices to U.S. co-producers or, in the absence of that, the price differential on AGCL's sales in the U.S. to co-producers and sales to pro-

[6] Congressional dissatisfaction with Treasury's administration of the Antidumping Act is a matter of public record. H.R. Rep. No. 96-317, 96th Cong., 1st Sess. 69; S. Rep. No. 96-249, 96th Cong., 1st Sess. 76-77. On January 1, 1980, the new antidumping law (contained in the Trade Agreements Act of 1979, Public Law 96-39) became effective; and on January 2, 1980, Treasury's responsibility for the administration of that law was transferred to the Commerce Department by the President's Reorganization Plan No. 3 of 1979 (44 FR 69275 and 45 FR 9931).

[7] "The investigation by the Department of the Treasury of the pricing of methyl alcohol imported from Canada covered the 6-month period from January 1, 1978, through June 30, 1978. The investigation was limited to sales by Alberta Gas Chemicals Limited (AGCL), which accounted for virtually all imports of methyl alcohol from Canada. Fair value comparisons were made on approximately 72 percent of the sales of the subject merchandise, and dumping margins ranging from 9.9 percent to 108.6 percent were found on all the sales compared. The weighted average margin of dumping as determined by the Department of the Treasury was 59.2 percent." 44 FR 40735 (1979). See section I, paragraph 4 of this opinion.

ducers of formaldehyde be used for establishing the adjustment to the home market price. Georgia-Pacific Corp., a U.S. co-producer, also maintained that third-country experience should be used, or that, in the alternative, adjustments be made for volume discounts pursuant to § 153.9 of the Customs Regulations (19 CFR 153.9) or for circumstances of sale, pursuant to § 153.10 (19 CFR 153.10).

Treasury's consistent interpretation of § 153.15 of the Customs Regulations (19 CFR 153.15) has precluded the use of third-country sales as a basis for making level of trade comparisons for fair value purposes. Moreover, the Department has not considered sales at different levels of trade in the U.S. as an appropriate basis for adjustments in calculating fair value. Nevertheless, the Treasury has in the past considered claims for quantity discounts or differences in circumstances of sale to the extent the requirements for such adjustments can be satisfied, which have reached results comparable to a "level of trade" adjustment. Where price differences result from differences in the levels of trade being served, and the cost of those differences can be quantified by reference to verified added costs incurred due to different marketing practices in the foreign market under examination, an adjustment will be considered. However, in this case no actual quantification of such differences was presented. Accordingly, the Department has used sales at the nearest comparable level of trade, in this case sales to producers of formaldehyde, for the purposes of comparison with sales to co-producers in the United States.

Continuing, the Notice of Determination states:

In prior cases, the Department has noted that adjustments for differences in level of trade cannot always be accounted for satisfactorily by adjustments for differences in circumstances of sale and quantity discounts. Since the issue here is a fundamental one, affecting many cases, it is deemed inadvisable to depart from consistent prior practice until a thorough review of the issue has been completed and any changes to that practice implemented through a formal rule-making process.

Respondent made a claim for adjustment for differences in quantities relative to sales to one large U.S. producer of formaldehyde. Since adequate documentation was not provided pursuant to § 154.9 of the Customs Regulations to justify such an adjustment, that claim was disallowed.

The Antidumping Act of 1921 did not define the term "fair value" as used in 19 U.S.C. § 160(a)—the basis for determining dumping margins—nor did the statute indicate a method for calculating such margins. Treasury, however, issued regulations implementing the statute by prescribing the methods for determining "fair value" and calculating dumping margins (19 CFR §§ 153.1–153.18). Sections 153.3(a) and 153.15 of the Customs Regulations (19 CFR §§ 153.3(a) and 153.15), pertinent to the present issue, read:

§ 153.3 Fair value based on sales for exportation to countries other than the United States.

(a) *General.* If it is demonstrated, in a situation other than that provided for in § 153.4, that during a representative period the quantity of such or similar merchandise sold for consumption in the country of exportation is nonexistent or so small, in relation to the quantity sold for exportation to countries other than the United States, as to be an inadequate basis for comparison, then merchandise imported into the United States ordinarily will be deemed to have been sold, or to be likely to be sold, at less than fair value if the purchase price or the exporter's sales price (as defined in sections 203 and 204, respectively, of the Act (19 U.S.C. 162, 163)), as the case may be, is, or is likely to be, less than the price (as defined in section 205, after adjustment as provided for in section 202 of the Act (19 U.S.C. 164, 161)), at which such or similar merchandise (as defined in section 212(3) of the Act (19 U.S.C. 170a(3))), is sold for exportation to countries other than the United States on or about the date of purchase or of agreement to purchase the merchandise imported into the United States if purchase price applies, or on or about the date of exportation thereof if exporter's sales price applies.

§ 153.15 Fair value; level of Trade.

The comparison of the purchase price or exporter's sales price (as defined in sections 203 and 204, respectively, of the Act (19 U.S.C. 162, 163)), as the case may be, with the applicable price in the home market of the country of exportation (or, as the case may be, the price to or in third country markets) generally will be made at the same commercial level of trade. However, if the Secretary finds that the sales of the merchandise to the United States or in the applicable foreign market at the same commercial level of trade are insufficient in number to permit an adequate comparison, the comparison will be made at the nearest comparable commercial level of trade and appropriate adjustments will be made for differences affecting price comparability.

Under the foregoing regulations, plainly sales to third countries are intended to be utilized in computing dumping margins only as a secondary or residual basis of comparison when the quantity of merchandise sold in the country of exportation is non-existent or so small as to be an inadequate basis of comparison.

Conceding "that the Treasury Department followed its regulations", plaintiff nonetheless asserts that had Treasury compared AGCL's prices to United States co-producers with the prices to a third country co-producer, the weighted average margin of dumping would have been substantially lower.[8] While it is arguable that Treasury should have adopted a regulation permitting the use of third country sales as a basis for making level of trade comparisons for fair value purposes, and plaintiff's argument has a certain super-

[8] The actual differences in the margins were submitted by plaintiff in a Confidential Memorandum.

ficial appeal, I find (and as noted above, plaintiff concedes) that Treasury followed its existing regulations. Normally, Treasury Regulations must be sustained unless they are unreasonable and plainly inconsistent with statute. *Commissioner* v. *South Texas Lumber Co.*, 333 U.S. 496, 501 (1948). I see no basis in this case, however, for holding that the regulations challenged by plaintiff are either unreasonable or contrary to the Antidumping Act.

The following decisions of the Supreme Court relied upon by plaintiff have been noted, but found inapposite: *United States* v. *Cartwright*, 411 U.S. 546 (1973) involved the validity of a Treasury regulation concerning the valuation for purposes of the Federal Estate Tax of mutual fund shares on the basis of asked prices in the public market. *De Sylva* v. *Ballentine*, 351 U.S. 570 (1956) involved a certain practice of the Copyright Office.

As respects plaintiff's assertion that Treasury allowed no adjustments, Treasury's Notice of Determination indicates that while Customs would consider adjustments, AGCL did not present adequate claims. Customs, therefore, proceeded to compare sales to United States co-producers with unadjusted sales to Canadian formaldehyde producers.

In brief, plaintiff has failed to establish any invalidity in the price comparisons utilized in the subject LTFV investigation, and the dumping margins determined by Treasury are valid and were arrived at in accordance with the regulations.

Finally, we reach plaintiff's claim that the Commission's injury determination is erroneous as a matter of law, and without a rational basis in fact. As noted *supra*, three of the Commissioners determined that the United States methanol-producing industry is likely to be injured by reason of the LTFV sales, while two Commissioners dissented.[9]

It is now settled under the statutes applicable in this case that judicial review is upon the record made before the Commission; and "the sole standard of review of factual determinations of injury or likelihood of injury in antidumping cases [is] whether the Commission's determination is supported by substantial evidence." *See Armstrong Bros. Tool Co. et al.* v. *United States* (*Daido Corporation, Steelcraft Tools Division, Party-in-Interest*), 67 CCPA —, C.A.D. 1252, 626 F. 2d 168 (1980), and cases cited therein.

[9] In its reply memorandum (p. 1), defendant states that the dissenting Commissioners did not find, nor even comment, concerning present injury. That statement is incorrect since a substantial portion of the dissenting statement is focused on that very determination (viz., "No Injury by Reasons of LTFV Sales"). Moreover, the majority statement of reasons shows that the Commission investigated "whether an industry in the United States *is being* or is likely to be injured, or is prevented from being established, by reason of the importation of such merchandise into the United States" (44 FR 40734) (emphasis added). Hence, it would appear obvious that had the majority concluded that there was present injury, it would not have considered whether there was likelihood of future injury.

347-183 0 - 81 - 3

I find, after careful consideration of the record before the Commission, that the majority's determination of likelihood of injury is not supported by substantial evidence, and I agree with the well reasoned Statement of dissenting Commissioners Alberger and Stern.

The majority of the Commission found that significant dumping margins (as detemined by Treasury) on the LTFV imports from Canada had suppressed U.S. producer prices and that there was a sharply deteriorating trend in the profitability of the domestic industry since 1976. Moreover, the majority found that the declining trend in profitability was the result of rapidly increasing production costs (primarily those for natural gas) without corresponding increases in selling prices, and that the domestic industry was increasingly vulnerable to injury from the LTFV imports. The majority concluded that "continued sales at less than fair value of *expanding supplies* from Canada will suppress or depress U.S. producers' prices and will be almost certain to cause injury to the U.S. industry". (Emphasis added.)

The majority's finding concerning *expanding* supplies was based upon the possibility that AGCL might, at some future time, construct new production facilities. Thus, the Commission's majority stated (44 FR 40735):

> In July 1976, AGCL obtained approval from the Energy Resources Conservation Board of Alberta to use natural gas as a raw material in the production of methyl alcohol which would be produced in two additional facilities to be constructed at the Medicine Hat, Alberta site. * * * Although AGCL has not made a final determination on whether to proceed with this construction, the outcome of this investigation conceivably may be a factor in the final decision. If AGCL is permitted to continue to sell at LTFV in this market and the additional capacity under consideration is brought into being, about 700 million pounds of methyl alcohol will be available for export to the United States. The additional supply is the equivalent of more than 10 percent of current U.S. consumption. The U.S. market is a logical market for any increased Canadian production.[10]

Although the dissenting Commissioners recognized that the domestic industry was experiencing "some economic difficulty" (particularly in terms of profitability), they did not relate the domestic industry's (then) current economic problems to the LTFV imports from Canada.

---

[10] In connection with its discussion of AGCL's expansion plans, the Commission majority noted that "[n]atural gas is the principal raw material used in the production of methyl alcohol and since AGCL has access to natural gas at a price much lower than that at which it is available in the U.S., AGCL is assured of a low cost supply of the primary raw material necessary for its expanded production" (44 FR 40735). With reference to this cost advantage enjoyed by AGCL, the Commission's dissenters aptly observed that "this situation [cost advantage] is a comparative as opposed to an unfair trade advantage and therefore, is not an appropriate factor in terms of assessing whether or not a likelihood of injury exists in this case." (44 FR 40738). In its reply to plaintiff's cross-motion (p. 11), defendant conceded that the majority's reference to the prices at which AGCL obtained natural gas is irrelevant to its injury determination.

With regard to their determination that the domestic methyl alcohol producing industry was not likely to be injured by the LTFV imports, the dissenting Commissioners were "unable to ascertain any factors which would lead [them] to find that the likelihood of such injury is 'real and imminent'." (44 FR 40736). On this score, the dissenters sharply disagreed with the majority's apprehensions concerning expanding supplies of methyl alcohol from Canada, pointing out (44 FR 40738):

> It is clear that in this case additional exports to the United States by AGCL are unlikely in the imminent future. First, AGCL is producing at virtually 100 percent of capacity and nearly all production is committed under contractual agreements to existing customers. Second, information supplied to the Commission indicates that AGCL's markets outside the United States are expanding and that selling prices in those markets are higher than corresponding U.S. prices. Finally, combined inventories of methyl alcohol held by AGCL and AGCI on March 31, 1979, are relatively small and would not significantly increase U.S. import penetration even if the entire inventory was suddenly diverted to this country.
>
> AGCL has an expansion plan under consideration that could add two additional plants to existing facilities. However, even if AGCL decides to expand its production facilities, information presented to the Commission clearly indicates that the impact of any such expansion would not be felt in the U.S. market for at least three years. If construction on the new facilities began immediately, AGCL reports that production would not commence until 1982. Furthermore, AGCL's expansion plans are uncertain at present. Financing for the expansion has yet to be obtained. In addition, AGCL has indicated that it would have to evaluate future Canadian energy policies, the results of multilateral trade negotiations and potential new markets for methyl alcohol. We feel that, in view of all these factors, the length of time before any additional methyl alcohol could be exported to the United States is clearly not within the standard of "real and imminent."

The Congressional standard for determining likelihood of injury was articulated by the Senate Committee on Finance,[11] which explained that future injury must be:

> based upon evidence showing that the *likelihood is real and imminent* and not on mere supposition, speculation, or conjecture. [Emphasis added.]

In 1979, Congress again made its intent clear concerning determination of future injury. Congress, in repealing the Antidumping Act of 1921, replaced the language in the statute concerning the likelihood of injury with language directing the Commission to determine whether there exists a "threat of material injury". 19 U.S.C. § 1673

[11] S. Rep. No. 1298, 93rd Cong., 2d Sess. 180 (1974).

(1980). In that connection, Congress stressed a practical test: there must be "information showing that the threat is real and injury is imminent, not a mere supposition or conjecture". S. Rep. No. 249, 96th Cong., 1st Sess. 88, 89 (1979); H.R. Rep. No. 317, 96th Cong., 1st Sess. 47 (1979).

We have seen that central to the majority's determination of likelihood of injury is AGCL's expansion plans. Nevertheless, the majority conceded that AGCL had not made a final decision on whether to proceed with the construction of the new plants, and speculated that "the outcome of this investigation *conceivably* may be a factor in the final decision" (44 FR 40735) (Emphasis added). The Commission majority further *speculated* that "[i]f AGCL has increased capacity and additional product availability and is able to continue to sell at LTFV to the U.S. market, the likelihood of increased penetration and injury to the domestic industry is apparent" (44 FR 40735).

Patently, the majority's analysis is flawed with supposition and conjecture. As stressed in the dissenting statement, AGCL's expansion plans were uncertain and depended upon several contingencies, and indeed, financing had not even been arranged. More to the point is the undisputed fact that even if AGCL had immediately decided to expand its production facilities, production in such facilities could not commence until 1982 at the earliest, assuming there were no unforeseen delays.

The dissenting Commissioners noted, among other significant factors making additional exports to the United States by AGCL unlikely in the imminent future, is that AGCL (the sole Canadian exporter) was operating at nearly 100 percent of its capacity, and virtually all of the methyl alcohol production was committed to its customers under existing contractual agreements. Consequently, AGCL had no immediate (or "present") ability to increase its production of methyl alcohol or to divert its available capacity to the United States. Hence, it is clear that any injury which might result at some undetermined future time could occur only if new facilities were completed; and under all the facts and circumstances the likelihood of future injury perceived by the Commission majority did not constitute "real and imminent" injury as intended by Congress.

Furthermore, the Commission majority found that "if" AGCL's planned facilities were constructed, that all of the new capacity, estimated to be about 700 million pounds of methyl alcohol, will be "available" for export to the United States. The majority then stated that such estimated additional future supply was the equivalent of more than 10 percent of *current* U.S. consumption, and

that "[t]he U.S. market is a logical market for any increased Canadian production" (44 FR 40735). Thus, the Commission majority not only assumed the future increased capacity available for export to the United States, but also implicitly postulated, contrary to the evidence in the record, that there would be no future expansion in the United States consumption of methyl alcohol. The dissenting statement points out that "[o]ver the next several years the market for methyl alcohol is forecasted to expand as methyl alcohol is used in a widening range of applications. Of particular significance are the potential uses of methyl alcohol as fuel for the generation of electricity in powerplants and as a gasoline extender and base for synthetic gasoline" (44 FR 40736).

In summary, the record before the Commission shows simply a mere *possibility* that injury might occur at some remote future time. Such showing, viewed in the context of the "real and imminent" standard enunciated by Congress, compels the conclusion that the record lacks substantial evidence of likelihood of injury to the United States methyl alcohol producing industry. It follows that Treasury's Finding of Dumping of methyl alcohol from Canada—an essential predicate for Customs' demand that plaintiff file an antidumping bond—was erroneous.[12] Accordingly, it is hereby ORDERED, ADJUDGED AND DECREED THAT:

1. Defendant's motion for summary judgment is denied;

2. Plaintiff's cross-motion for summary judgment is granted; and

3. The Regional Commissioner of Customs at the port of New York shall accept Entry No. 79–638078–8 of August 15, 1979,

---

[12] Defendant, in a letter dated May 14, 1981, called to the Court's attention a recent decision of the United States Court of Appeals for the Second Circuit (Feinberg, C.J.) dated May 12, 1981, *Alberta Gas Chemicals, Ltd.* v. *Celanese Corporation and Celanese Chemical Company, Inc.*, Docket No. 80-9021. In that action, Alberta (the Canadian exporter) charges the defendants with fraud and unfair competition, by representing false testimony before the Commission concerning their plans to expand methanol production capacity and their estimate of demand in the United States for methanol. The complaint prayed for an injunction requiring Celanese to disclose the true facts to the Commission, and also sought damages. Judge Sofaer of the United States District Court for the Southern District of New York, in a memorandum opinion and order dated October 8, 1980, dismissed the action on the grounds that the complaint failed to state a cause of action, and that even if the complaint stated a cause of action, the matter fell within the jurisdiction of the United States Court of International Trade. The District Court also noted that under the doctrine of primary jurisdiction the issues relating to Celanese's conduct during the hearing before the Commission should be resolved, in the first instance, by the Commission. The Circuit Court reversed, noting that Alberta did not call the alleged perjury to the attention of the Commission and that the instant action was still pending. The Court of Appeals ruled that the Commission has the power to protect the integrity of its own proceedings and should have an opportunity to resolve the perjury issue. Consequently, the case was remanded to the District Court with instructions to stay all proceedings before it pending further proceedings before the Commission.

In response to defendant's letter of May 14, 1981, plaintiff submitted a letter to the Court, dated May 18, 1981, agreeing with defendant's observation that neither the United States nor the International Trade Commission is a party in the *Celanese* matter, and suggesting that the *Celanese* decision should not affect the timing or content of this Court's decision. I agree with the comments of counsel for both parties concerning the *Celanese* case.

and deliver the merchandise in issue to plaintiff, without requiring the posting of an Antidumping Bond or the production of information pursuant to section 208 of the Antidumping Act of 1921, as amended (19 U.S.C. §167).

(Slip Op. 81–49)

ZENITH RADIO CORPORATION, PLAINTIFF *v.* UNITED STATES, DEFENDANT

Court No. 80–5–00861

Order on Claims of Privilege

(Dated May 29, 1981)

MALETZ, *Judge*.

I(a) In an affidavit executed on March 15, 1981, Alexander M. Haig, Jr., Secretary of State, has claimed state secrets privilege for the following documents or specified portions thereof:

Document No.	Date	Title or description
46	Apr. 4, 1978	Cable: 78 Tokyo 5629, Japanese Reaction to Color TV Antidumping Duty Assessments (Paragraph 10)
47	Mar. 31, 1978	Cable: 78 Tokyo 5369, Japanese Protest Color TV Antidumping Duty Assessments (Paragraph 5)
48	Mar. 30, 1978	Cable: 78 Tokyo 5241, Japanese Protest Color TV Antidumping Duty Assessments (Paragraph 1)
58	Mar. 27, 1978	Diplomatic Note from the Embassy of Japan

(b) Pursuant to the court's order of May 13, 1981, these documents were delivered to the court under seal on May 28, 1981, for examination by the court *in camera*.

(c) The court has carefully examined each of these documents *in camera* and on the basis of such examination orders:

(1) That the claim of state secrets privilege be sustained as to the specified portions of documents 46, 47, and 48, and that such portions shall not be disclosed to plaintiff.

(2) That the claim of state secrets privilege as to document 58 be denied as moot since it has already been publicly disclosed by the Government on two prior occasions. Thus the document was attached as an exhibit to an affidavit of Robert H. Mundheim, General Counsel of the Department of the Treasury, that was filed in the United States District Court

for the District of Columbia in connection with the *Compact* litigation. A copy of this affidavit including the document in question was also filed in this court in connection with the Government's cross-cross-motion for summary judgment in this case.

II(a) In an affidavit executed on March 16, 1981, William E. Brock, United States Trade Representative, has claimed executive privilege for six documents stating that each is an intragovernmental or intergovernmental communication which contains the advice, recommendations, or statements of opinion of U.S. Government employees or which indicates negotiating positions of the U.S. and Japanese Governments. The six documents for which such privilege is claimed are as follows:

1. A memorandum dated April 13, 1977 from Alan Wm. Wolff to members of the Trade Policy Review Group concerning the continuing discussions with the Japanese regarding color TV's.

2. A memorandum of April 1977 from Tom Graham, Deputy General Counsel, to Ambassador Robert Strauss concerning the Zenith countervailing duty case. Attached is a proposed press statement and a briefing paper.

3. A draft Memorandum of Understanding concerning TV's dated April 19, 1977 with the following attachments:

(1) Draft Notes to be exchanged containing provisions concerning trade in color television receivers

(2) Draft agreed minutes

(3) Draft side letters

4. Draft Side Letter of U.S. Administration of Agreement dated May 5, 1977.

5. A memorandum of May 1977 from Robert S. Strauss to members of the Economic Policy Group concerning color TV's. Attached is a draft memorandum to the President concerning the color television receiver agreement with Japan.

6. Drafts, dated May 20, 1977, of letters of notification to the Speaker of the House and the President of the Senate concerning import relief for the color television industry.

(b) Pursuant to the court's order of May 13, 1981, these documents were delivered to the court under seal on May 28, 1981 for examination by the court *in camera*.

(c) The court has carefully examined each of these documents *in camera*.

(d) The court has carefully weighed the government's need in the public interest in maintaining the confidentiality of each of the

foregoing documents as against the need of the plaintiff in prosecuting this action.

(e) The court has concluded that the government's need in the public interest in maintaining the confidentiality of each of these six documents far outweighs any need of the plaintiff in prosecuting this action and therefore orders that the claim of executive privilege for each of such documents be sustained and that such documents shall not be disclosed to plaintiff.

III(a) In an affidavit executed on March 13, 1981, Admiral Bobby Ray Inman, Acting Director of Central Intelligence, makes reference to two classified *in camera* affidavits in which state secrets privilege is claimed.

(b) Pursuant to the court's order of May 13, 1981, the two *in camera* affidavits were on May 27, 1981 hand delivered to the court personally.

(c) The court has carefully examined *in camera* the two affidavits.

(d) On the basis of this examination, the court orders that Admiral Inman's claim of state secrets privilege contained in his *in camera* affidavit, together with the claim of state secrets privilege made by an official referred to in that affidavit be sustained.

Decisions of the United States Court of International Trade

Abstracts

Abstracted Protest Decisions

DEPARTMENT OF THE TREASURY, *June 1, 1981.*

The following abstracts of decisions of the United States Court of International Trade at New York are published for the information and guidance of officers of the customs and others concerned. Although the decisions are not of sufficient general interest to print in full, the summary herein given will be of assistance to customs officials in easily locating cases and tracing important facts.

WILLIAM T. ARCHEY,
Acting Commissioner of Customs.

DECISION NUMBER	JUDGE & DATE OF DECISION	PLAINTIFF	COURT NO.	ASSESSED	HELD	BASIS	PORT OF ENTRY AND MERCHANDISE
				Par. or Item No. and Rate	Par. or Item No. and Rate		
P81/70	Re, C.J. May 28, 1981	Chip-N-Saw, Inc.	78-10-01826	Item 674.53 10%	Item 662.18 6%	Judgment on the pleadings	Blaine (Seattle) Chains or chain assemblies
P81/71	Rao, J. May 28, 1981	A. B. Dick Company	77-12-04054, etc.	Item 409.00 3.5¢ per lb. + 22.5%	Item 432.00 5%, but not less than highest rate applicable to any compo-	Agreed statement of facts	Chicago Dry Magnetic Toner not containing any benzenoid components

					nent material [item 445.30 at 1.3¢ per lb. +10%]		
P81/72	Richardson, J. May 28, 1981	Alltransport, Inc.	78-12-02107	Item 708.80 22.5%	Item 708.80 15%	Wild Heerbrugg Instruments, Inc. v. U.S. (C.D. 4767)	New York Phototubes
P81/73	Newman, J. May 28, 1981	Uniroyal, Inc.	79-6-91025, etc.	Item 657.25 9.5%	Item 772.65 4%	Uniroyal, Inc., c/o A. N. Deringer, Inc. v. U.S. (Abs. P80/59)	Champlain-Rouses Point (Ogdensburg) Hose, pipe or tubing in various lengths with attached fittings

Decisions of the United States Court of International Trade

Abstracts

Abstracted Reappraisement Decisions

DECISION NUMBER	JUDGE & DATE OF DECISION	PLAINTIFF	COURT NO.	BASIS OF VALUATION	HELD VALUE	BASIS	PORT OF ENTRY AND MERCHANDISE
R81/211	Watson, J. May 27, 1981	Geigy Chemical Corporation	R65/18012	United States value	U.S. selling prices, less 1% cash discount as determined by customs officer at time of appraisement; less 32.6% representing profit and general expenses usually made in U.S. on sales of dyestuffs of same class or kind; less costs of transportation and in-	U.S. v. Geigy Chemical Corporation et al. (C.A.D. 1155)	New York Benzenoid dyestuffs

								surance from place of shipment to place of delivery in amounts determined by customs officer at time of appraisement; divided by 1.40 or such other factor applied by customs officer, to allow for customs duties payable on imported dyestuffs
							U.S. v. Geigy Chemical Corporation et al. (C.A.D. 1155)	
								New York Benzenoid dyestuffs
R81/212	Watson, J. May 27, 1981	Geigy Chemical Corporation	R65/20988	United States value	U.S. selling prices, less 1% cash discount as determined by customs officer at time of appraisement; less 25.3% representing profit and general expenses usually made in U.S. on sales of dyestuffs of same class or kind; less costs of transportation and insurance from place of shipment to place of delivery in amounts determined by customs officer at time of appraisement; divided by 1.40 or such other factor applied by customs officer, to allow for customs duties payable o imported dyestuffs			

DECISION NUMBER	JUDGE & DATE OF DECISION	PLAINTIFF	COURT NO.	BASIS OF VALUATION	HELD VALUE	BASIS	PORT OF ENTRY AND MERCHANDISE
R81/213	Watson, J. May 27, 1981	Geigy Chemical Corporation	R65/22900	United States value	U.S. selling prices, less 1% cash discount as determined by customs officer at time of appraisement; less 25.5% representing profit and general expenses usually made in U.S. on sales of dyestuffs of same class or kind; less costs of transportation and insurance from place of shipment to place of delivery in amounts determined by customs officer at time of appraisement; divided by 1.40 or such other factor applied by customs officer, to allow for customs duties payable on imported dyestuffs	U.S. v. Geigy Chemical Corporation et al. (C.A.D. 1155)	New York Benzenoid dyestuffs

R81/214	Watson, J. May 27, 1981	Intracolor Corporation	74-3-00606	United States value	U.S. selling prices, less 1% cash discount as determined by customs officer at time of appraisement; less 29.2% representing profit and general expenses usually made in U.S. on sales of dyestuffs of same class or kind, less costs of transportation and insurance from place of shipment to place of delivery in amounts determined by customs officer at time of appraisement; divided by 1.40 or such other factor applied by customs officer, to allow for customs duties payable on imported dyestuffs	U.S. v. Geigy Chemical Corporation et al. (C.A.D. 1155)	New York Benzenoid dyestuffs
R81/215	Re, C.J. May 28, 1981	Asea Inc.	76-12-02653	Export value	Equal to invoiced unit prices, net packed, as set forth in entries and invoices	C.B.S. Imports Corp. v. U.S. (C.D. 4739)	Portland, Oreg. Electrical equipment and apparatus

DECISION NUMBER	JUDGE & DATE OF DECISION	PLAINTIFF	COURT NO.	BASIS OF VALUATION	HELD VALUE	BASIS	PORT OF ENTRY AND MERCHANDISE
R81/216	Re, C.J. May 28, 1981	Asea Inc.	77-8-02331	Export value	Equal to invoiced unit prices, net packed, as set forth in entries and invoices	C.B.S. Imports Corp. v. U.S. (C.D. 4739)	Milwaukee Electrical equipment and apparatus
R81/217	Re, C.J. May 28, 1981	Balfour, Guthrie & Co., Ltd.	74-6-01470, etc.	Export value	Appraised values specified on entry papers by liquidating officer, less any additions included which reflect currency revaluation	C.B.S. Imports Corp. v. U.S. (C.D. 4739)	Los Angeles Miscellaneous articles
R81/218	Re, C.J. May 28, 1981	Carlson Furniture, Inc.	74-10-02703	Export value	Appraised values specified on entry papers by liquidating officer, less any additions included which reflect currency revaluation	C.B.S. Imports Corp. v. U.S. (C.D. 4739)	Los Angeles Miscellaneous articles

International Trade Commission Notices

Investigations by the United States International Trade Commission

DEPARTMENT OF THE TREASURY, JUNE 11, 1981

The appended notices relating to investigations by the United States International Trade Commission are published for the information of Customs Officers and others concerned.

R. E. CHASEN,
Commissioner of Customs.

Investigation No. 751–TA–4

SYNTHETIC L-METHIONINE FROM JAPAN

Notice of Institution of Section 751(b) Review Investigation

AGENCY: United States International Trade Commission.

ACTION: Institution of Section 751(b) review investigation concerning affirmative determination in Investigation No. AA1921–115, Synthetic Methionine from Japan.

SUMMARY: Notice is hereby given that the U.S. International Trade Commission has initiated an investigation pursuant to section 751(b) of the Tariff Act of 1930, 19 U.S.C. § 1675(b) (Supp. III 1979), to review its determination in investigation No. AA1921–115. The purpose of the investigation is to determine whether an industry in the United States would be materially injured, would be threatened with material injury, or the establishment of an industry in the United States would be materially retarded, if the antidumping order regarding synthetic methionine from Japan were to be modified or revoked with respect to synthetic l-methionine provided for in item 425.04 of the Tariff Schedules of the United States.

SUPPLEMENTARY INFORMATION: On May 14, 1973, the Commission determined that an industry in the United States was injured within the meaning of the Antidumping Act, 1921, by reason of imports of synthetic methionine from Japan determined by the Secretary of Treasury to be sold or likely to be sold at less than fair value (hereinafter "LTFV").

On July 3, 1973, the Department of the Treasury issued a finding of dumping, 7 Cust. B. 630 (1973); T.D. 73–188, and published notice thereof in the Federal Register, 38 FR 18382.

On December 15, 1980, the Commission received a request to review its affirmative determination in investigation No. AA1921–115. The request was filed under section 751(b) of the Tariff Act of 1930 by Kyowa Hakko USA, Inc., an importer of synthetic l-methionine from Japan.

The Commission requested comments from the public regarding the proposed institution of a review investigation in a notice published in the Federal Register on April 15, 1981 (46 FR 22087). No comments adverse to institution were received. Accordingly, on the basis of the Kyowa Hakko petition and information obtained by the Commission staff, the Commission on May 22, 1981, voted to institute investigation No. 751–TA–4. The Commission determined that the following alleged changed circumstances are sufficient to warrant review: (1) the likelihood that there is no industry in the United States which produces synthetic l-methionine, and (2) the likelihood that synthetic l-methionine from Japan is not like any form of synthetic methionine produced in the United States.

The investigation will be conducted in accordance with section 207.45(b) of the Commission's Rules of Practice and Procedure (46 FR 18023) (March 23, 1981). The purpose of this investigation is to determine whether an industry in the United States would be materially injured, would be threatened with material injury, or the establishment of an industry in the United States would be materially retarded if the present antidumping order were to be modified or revoked to exclude synthetic l-methionine. Modification or revocation of the dumping finding as to synthetic l-methionine would not affect the Commission's affirmative determination as to other forms of synthetic methionine from Japan.

Dates: Pursuant to section 207.45(b) of the Commission's Rules of Practice and Procedure (46 F.R. 18023 (March 23, 1981)), the 120 day period for completion of this investigation began on May 22, 1981, the date of institution.

Public Hearing. Any person with an interest in this investigation may request in writing that the Commission hold a public hearing in connection with this investigation. Any such request must be received by the Commission within 14 days of the date of publication of this notice of investigation in the Federal Register.

Written Submissions: Any person may submit to the Commission on or before June 19, 1981, written statements of information pertinent to the subject matter of the investigation. A signed original and nineteen true copies of such statements must be submitted in accordance with

section 201.8 of the Commission's Rules of Practice and Procedure, 19 CFR § 201.8 (1980).

Any business information which a submitter desires the Commission to treat as confidential shall be submitted separately and each sheet must be clearly marked at the top "Confidential business data." Confidential submissions must conform with the requirements of section 201.6 of the Rules of Practice and Procedure, 19 CFR 201.6. All written submissions, except confidential business data, will be available for public inspection.

FOR FURTHER INFORMATION CONTACT: John MacHatton, supervisory investigator, Office of Investigations, U.S. International Trade Commission, (202) 523–0439; Warren H. Maruyama, Office of the General Counsel, U.S. International Trade Commission, (202) 523–0143.

By Order of the Commission.

Issued: May 29, 1981.

KENNETH R. MASON,
Secretary.

In the Matter of CERTAIN STABILIZED HULL UNITS AND COMPONENTS THEREOF AND SONAR UNITS UTILIZING SAID STABILIZED HULL UNITS	Investigation No. 337–TA–103

Notice of Investigation

AGENCY: U.S. International Trade Commission.

ACTION: Institution of investigation pursuant to 19 U.S.C. 1337.

SUMMARY: Notice is hereby given that a complaint was filed with the U.S. International Trade Commission on April 29, 1981, and amended May 20, 1981, under section 337 of the Tariff Act of 1930 (19 U.S.C. 1337), on behalf of Western Marine Electronics, Inc., 905 Dexter Avenue North, Seattle, Washington 98109. The amended complaint (hereinafter the complaint) alleges unfair methods of competition and unfair acts in the importation of certain stabilized hull units and components thereof and sonar units utilizing said stabilized hull units into the United States, or in their sale, by reason of the alleged infringement by said stabilized hull units of claims 1, 11, 12, and 14 of U.S. Letters Patent 3,553,638 and the contribution to the infringement of said claims by said components. The complaint further alleges that the effect or tendency of the unfair methods of competition and unfair acts is to destroy or substan-

tially injure an industry, efficiently and economically operated, in the United States.

The complainant requests that, after a full investigation, the Commission issue, for the life of said patent, both an order excluding said articles from entry into the United States and an order directing respondents to cease and desist from engaging in said unfair acts.

AUTHORITY: The authority for institution of this investigation is contained in section 337 of the Tariff Act of 1930 and in section 210.12 of the Commission's Rules of Practice and Procedure.

SCOPE OF THE INVESTIGATION: Having considered the complaint, the U.S. International Trade Commission, on May 27, 1981, ordered that—

(1) Pursuant to subsection (b) of section 337 of the Tariff Act of 1930, an investigation be instituted to determine whether there is a violation of subsection (a) of section 337 in the unlawful importation of certain stabilized hull units and components thereof and sonar units utilizing said stabilized hull units into the United States, or in their sale, by reason of the alleged infringement by said stabilized hull units of claims 1, 11, 12, or 14 of U.S. Letters Patent 3,553,638 and the contribution to the infringement of said claims by said components, the effect or tendency of which is to destroy or substantially injure an industry, efficiently and economically operated, in the United States;

(2) For the purpose of the investigation so instituted, the following are hereby named as parties upon which this notice of investigation shall be served:

(a) The complainant is—

Western Marine Electronics, Inc.
905 Dexter Avenue North
Seattle, Wash. 98109

(b) The respondents are the following companies, alleged to be in violation of section 337, and are the parties upon which the complaint is to be served:

Furuno Electric Co., Ltd.
9–52, Ashihara-cho
Nishinomiya, Japan

Furuno U.S.A., Inc.
271 Harbor Way
South San Francisco, Calif. 94080

(c) Robert S. Budoff, Unfair Import Investigations Division, U.S. International Trade Commission, 701 E Street NW.,

Washington, D.C. 20436, shall be the Commission investigative attorney, a party to this investigation; and

(3) For the investigation so instituted, Donald K. Duvall, Chief Administrative Law Judge, U.S. International Trade Commission, 701 E Street NW., Washington, D.C. 20436, shall designate the presiding officer.

Responses must be submitted by the named respondents in accordance with section 210.21 of the Commission's Rules of Practice and Procedure (19 CFR 210.21). Pursuant to sections 201.16(d) and 210.21(b) of the rules, such responses will be considered by the Commission if received not later than 20 days after the date of service of the complaint. Extensions of time for submitting a response will not be granted unless good and sufficient cause therefor is shown.

Failure of a respondent to file a timely response to each allegation in the complaint and in this notice may be deemed to constitute a waiver of the right to appear and contest the allegations of the complaint and this notice, and to authorize the presiding officer and the Commission, without further notice to the respondent, to find the facts to be as alleged in the complaint and this notice and to enter both a recommended determination and a final determination containing such findings.

The complaint, except for any confidential information contained therein, is available for inspection during official working hours (8:45 a.m. to 5:15 p.m.) in the Office of the Secretary, U.S. International Trade Commission, 701 E Street NW., Washington, D.C. 20436, telephone 202–523–0161.

FOR FURTHER INFORMATION CONTACT: Robert S. Budoff, Unfair Import Investigation Division, U.S. International Trade Commission, telephone 202–523–0113.

By order of the Commission.

Issued: June 1, 1981.

KENNETH R. MASON,
Secretary.

In the Matter of CERTAIN WHEEL LOCKS AND COMPONENTS THEREOF	Investigation No. 337–TA–102

Order

Pursuant to my authority as Chief Administrative Law Judge of this Commission, I hereby designate Administrative Law Judge Janet D. Saxon as Presiding Officer in this investigation.

The Secretary shall serve a copy of this order upon all parties of record and shall publish it in the Federal Register.

Issued: June 1, 1981.

DONALD K. DUVALL,
Chief Administrative Law Judge.

Notice of Investigation

[332–126]

EMERGING TEXTILE EXPORTING COUNTRIES

AGENCY: United States International Trade Commission.

ACTION: In accordance with the provisions of section 332(b) of the Tariff Act of 1930 (19 U.S.C. 1332(b)), the Commission has instituted investigation No. 332–126 for the purpose of gathering and presenting information on emerging textile exporting countries. Data will be provided to show changes which have occurred in world trade patterns in textiles and clothing with emphasis on changes in the past 5 to 8 years. Particular attention will be given to those countries which have had recent, significant growth in their exports of textile products or which seem to have the potential for significant export expansion. Certain of these individual countries will be selected for detailed study of their textile and apparel industries, trade, domestic markets, international competitive positions, and export potential. The report is expected to aid in an understanding of recent trends in international trade in textiles and apparel and the impact which the newly emerging exporters may have on world trade patterns and U.S. imports and exports.

EFFECTIVE DATE: June 1, 1981.

FOR FURTHER INFORMATION CONTACT: Mr. Reuben Schwartz or Mr. Joseph Williams, Textiles, Leather Products, and Apparel Division, U.S. International Trade Commission, Washington, D.C. 20436 (Phone 202–523–0114 or 202–523–5702).

WRITTEN SUBMISSIONS: There will be no public hearing scheduled for this study; however, written submissions from interested parties are invited concerning any phase of the study. Commercial or financial information which a party desires the Commission to treat as confidential must be submitted on separate sheets of paper, each clearly marked "Confidential Business Information" at the top. All submissions requesting confidential treatment must conform with the requirements of section 201.6 of the Commission's *Rules of Practice and Procedure* (19 CFR 201.6). All written submissions, except for

confidential business information, will be made available for inspection by interested persons. To be assured of consideration by the Commission in this study, written statements should be submitted at the earliest practicable date, but no later than December 1, 1981. All submissions should be addressed to the Secretary at the Commission's office in Washington, D.C.

By order of the Commission.

Issued: June 2, 1981.

KENNETH R. MASON,
Secretary.

In the Matter of CERTAIN WINDOW SHADES AND COMPONENTS THEREOF	Investigation No. 337–TA–83

Notice of Issuance of Exclusion Order

AGENCY: U.S. International Trade Commission.

ACTION: Issuance of exclusion order

SUMMARY: On May 29, 1981, the Commission issued an Action and Order and Opinion in the above-captioned investigation. The Commission ordered that window shades and components thereof which infringe claims 1, 2, 7, 8, or 9 of U.S. Letters Patent 4,006,770 be excluded from entry into the United States for the remaining term of said patent, except under license.

SUPPLEMENTARY INFORMATION: The Commission instituted this investigation and published notice thereof in the Federal Register of May 29, 1980 (45 FR 36229) to determine whether there is a violation of section 337 of the Tariff Act of 1930 (19 U.S.C. §1337) in connection with the importation into the United States and the sale therein of certain window shades and components thereof.

On May 19, 1981, the Commission unanimously determined that there is a violation of section 337 in the unauthorized importation and sale of certain peel-to-width window shades, and components thereof, which infringe claims 1, 2, 7, 8, or 9 of U.S. Letters Patent 4,006,770. The Commission determined that the appropriate remedy is an order directing that the infringing articles be excluded from entry into the United States for the remaining term of the patent, except under license granted by the patent owner, and that the public interest considerations do not preclude the granting of relief in this case.

Copies of the Commission's Action and Order, the Commission Opinion, and any other public documents on the record in this

investigation are available for inspection by the public during official working hours (8:45 a.m. to 5:15 p.m.) in the Office of the Secretary, U.S. International Trade Commission, 701 E Street NW., Room 161, Washington, D.C. 20436, telephone 202–523–0161.

FOR FURTHER INFORMATION CONTACT: Jack Simmons, Esq., Office of the General Counsel, U.S. International Trade Commission, telephone 202–523–0350.

By order of the Commission.

Issued: May 29, 1981.

KENNETH R. MASON,
Secretary.

In the Matter of CERTAIN STEEL ROD TREATING APPARATUS AND COMPONENTS THEREOF	Investigation No. 337–TA–97

Notice of Addition of Parties Respondent

AGENCY: U.S. International Trade Commission.

ACTION: Addition of Mr. Willy Korf and Mr. Johann Heinrich Rohde as parties respondent in the above-captioned investigation.

SUMMARY: Notice is hereby given that on the basis of a motion filed by complainant Morgan Construction Co. (Motion Nos. 97–9, 97–10), the Commission has amended the complaint and notice of investigation by adding the following persons as parties respondent in investigation No. 337–TA–97, *Certain Steel Rod Treating Apparatus and Components Thereof:*

(1) Mr. Willy Korf
c/o Korf Industrie & Handel GmbH Co. K.G.
Moltkestrasse 15, D7570
Baden-Baden, West Germany
(2) Mr. Johann Heinrich Rohde
3 Bleicherhof
Ratingen, West Germany

The Commission denied the motions to add parties respondent with respect to:

(1) Coinvest, B.V.
Amsterdam, Holland
(2) Korf Stahl, A.G.
Moltkestrasse 15, D7570
Baden-Baden, West Germany

AUTHORITY: The authority for the Commission's action is contained in section 337 of the Tariff Act of 1930 (19 U.S.C. § 1337) and in sections 210.20(d) and 210.22(a) (19 CFR §§ 210.20(d), 210.22(a)) of the Commission's *Rules of Practice and Procedure.*

SUPPLEMENTARY INFORMATION: Upon receipt of a compiaint filed by Morgan Construction Co., the Commission instituted investigation No. 337–TA–97 on January 23, 1981, to determine whether there is a violation of section 337 of the Tariff Act of 1930 by reason of the importation into and sale in the United States of certain steel rod treating apparatus and components thereof. Complainant Morgan alleges that the accused steel treating apparatus infringes claims 1–7 of U.S. Letters Patent 3,390,871. Notice of the Commission's investigation was published in the Federal Register on January 28, 1981 (46 FR 9263).

On April 14, 1981, complainant moved to add four new parties respondent to the investigation (Motion 97–10). Respondents opposed the motion in a submission filed on April 22, 1981.

On May 11, 1981, the presiding officer's recommended determination (Order No. 14) was certified to the Commission. The presiding officer recommended that the motion be granted with respect to Mr. Korf and Mr. Rohde and denied with respect to Coinvest, B.V., Amsterdam, Holland, and Korf Stahl, A.G., Baden-Baden, West Germany.

FOR FURTHER INFORMATION CONTACT: Warren H. Maruyama, Esq., Office of the General Counsel, U.S. International Trade Commission, telephone 202–523–0143.

By order of the Commission.

Issued: June 2, 1981.

KENNETH R. MASON,
Secretary.

Investigation No. 751–TA–4

SYNTHETIC L-METHIONINE FROM JAPAN

Notice of Institution of Section 751(b) Review Investigation

AGENCY: United States International Trade Commission.

ACTION: Institution of Section 751(b) review investigation concerning affirmative determination in Investigation No. AA1921–115, Synthetic Methionine from Japan.

SUMMARY: Notice is hereby given that the U.S. International Trade Commission has initiated an investigation pursuant to section

751(b) of the Tariff Act of 1930, 19 U.S.C. § 1675(b) (Supp. III 1979), to review its determination in investigation No. AA1921–115. The purpose of the investigation is to determine whether an industry in the United States would be materially injured, would be threatened with material injury, or the establishment of an industry in the United States would be materially retarded, if the antidumping order regarding synthetic methionine from Japan were to be modified or revoked with respect to synthetic l-methionine provided for in item 425.04 of the Tariff Schedules of the United States.

SUPPLEMENTARY INFORMATION: On May 14, 1973, the Commission determined that an industry in the United States was injured within the meaning of the Antidumping Act, 1921, by reason of imports of synthetic methionine from Japan determined by the Secretary of Treasury to be sold or likely to be sold at less than fair value (hereinafter "LTFV").

On July 3, 1973, the Department of the Treasury issued a finding of dumping, 7 Cust. B. 630 (1973); T.D. 73–188, and published notice thereof in the Federal Register, 38 FR 18382.

On December 15, 1980, the Commission received a request to review its affirmative determination in investigation No. AA1921–115. The request was filed under section 751(b) of the Tariff Act of 1930 by Kyowa Hakko USA, Inc., an importer of synthetic l-methionine from Japan.

The Commission requested comments from the public regarding the proposed institution of a review investigation in a notice published in the Federal Register on April 15, 1981 (46 FR 22087). No comments adverse to institution were received. Accordingly, on the basis of the Kyowa Hakko petition and information obtained by the Commission staff, the Commission on May 28, 1981, voted to institute investigation No. 751–TA–4. The Commission determined that the petition showed that following changed circumstances sufficient to warrant review: (1) the likelihood that there is no industry in the United States which produces synthetic l-methionine, and (2) the likelihood that synthetic l-methionine from Japan is not like any form of synthetic methionine produced in the United States.

The investigation will be conducted in accordance with section 207.45(b) of the Commission's Rules of Practice and Procedure (46 F.R. 18023) (March 23, 1981). The purpose of this investigation is to determine whether an industry in the United States would be materially injured, would be threatened with material injury, or the establishment of an industry in the United States would be materially retarded if the present antidumping order were to be modified or revoked to exclude synthetic l-methionine. Modification or revocation of the dumping finding as to synthetic l-methionine would not

affect the Commission's affirmative determination as to other forms of synthetic methionine from Japan.

Dates: Pursuant to section 207.45(b) of the Commission's Rules of Practice and Procedure (46 F.R. 18023 (March 23, 1981), the 120-day period for completion of this investigation began on May 28, 1981, the date of institution.

Public Hearing: Any person with an interest in this investigation may request in writing that the Commission hold a public hearing in connection with this investigation. Any such request must be received by the Commission within 14 days of the date of publication of this notice of investigation in the Federal Register.

Written Submissions: Any person may submit to the Commission on or before June 19, 1981, written statements of information pertinent to the subject matter of the investigation. A signed original and nineteen true copies of such statements must be submitted in accordance with section 201.8 of the Commission's Rules of Practice and Procedure, 19 CFR 201.8 (1980).

Any business information which a submitter desires the Commission to treat as confidential shall be submitted separately and each sheet must be clearly marked at the top "Confidential business data." Confidential submissions must conform with the requirements of section 201.6 of the Rules of Practice and Procedure, 19 CFR 201.6. All written submissions, except confidential business data, will be available for public inspection.

FOR FURTHER INFORMATION CONTACT: John MacHatton, supervisory investigator, Office of Investigations, U.S. International Trade Commission, (202) 523–0439; Warren H. Maruyama, Office of the General Counsel, U.S. International Trade Commission, (202) 523–0143.

By Order of the Commission.

Issued: June 3, 1981.

KENNETH R. MASON,
Secretary.

Index

U.S. Customs Service

Treasury decisions:
- Carrier bond 81-164
- Foreign currencies:
  - Variance from quarterly rate; May 25-29, 1981 81-165
  - Variance from quarterly rate; May 18-22, 1981 81-166

DEPARTMENT OF THE TREASURY
U.S. CUSTOMS SERVICE
WASHINGTON, D.C. 20229

OFFICIAL BUSINESS
PENALTY FOR PRIVATE USE, $300

POSTAGE AND FEES PAID
DEPARTMENT OF THE TREASURY (CUSTOMS)
(TREAS. 552)

U.S. GOVERNMENT PRINTING OFFICE : 1981

15/26

Customs Bulletin

Regulations, Rulings, Decisions, and Notices concerning Customs and related matters

and Decisions

of the United States Court of Customs and Patent Appeals and the United States Court of International Trade

Vol. 15 JULY 1, 1981 No. 26

This issue contains

T.D. 81-167 Through 81-170
C.A.D. 1263
Protest Abstracts P81/74 Through P81/87
Reap. Abstracts R81/219 Through R81/224
International Trade Commission Notice

NEWARK PUBLIC LIBRARY

AUG 17 1981

U. S. GOVT. PUBS.
DEPOSITORY 376

THE DEPARTMENT OF THE TREASURY
U.S. Customs Service

T1.11/3:

NOTICE

The abstracts, rulings, and notices which are issued weekly by the U.S. Customs Service are subject to correction for typographical or other printing errors. Users may notify the U.S. Customs Service, Logistics Management Division, Washington, D.C. 20229, of any such errors in order that corrections may be made before the bound volumes are published.

NEBRASKA PUBLIC LIBRARY

AUG 17 1981

U. S. GOVT. PUBS.
DEPOSITORY 376

For sale by the Superintendent of Documents, U.S. Government Printing Office, Washington, D.C. 20402. Price: $2.25 (single copy domestic); $2.85 (single copy foreign). Subscription price: $85.00 a year domestic; $106.25 a year foreign.

U.S. Customs Service

Treasury Decisions

(T.D. 81-167)

BONDS

Approval and discontinuance of bonds on Customs Form 7587 for the control of instruments of international traffic of a kind specified in section 10.41a of the Customs Regulations

Bonds on Customs Form 7587 for the control of instruments of international traffic of a kind specified in section 10.41a of the Customs Regulations have been approved or discontinued as shown below. The symbol "D" indicates that the bond previously outstanding has been discontinued on the month, day, and year represented by the figures which follow. "PB" refers to a previous bond, dated as represented by the figures in parentheses immediately following which has been discontinued. If the previous bond was in the name of a different company or if the surety was different, the information is shown in a footnote at the end of the list.

Dated: June 11, 1981

Name of principal and surety	Date of bond	Date of approval	Filed with district director/area director/amount
American Oceanic Shipping Corp., 50 Broad St., New York, NY; Old Republic Ins. Co. D 3/25/81	Mar. 20, 1980	Mar. 21, 1980	New York, Seaport $10,000
American Trading & Shipping, 1200 N.W. 78th Ave., Suite 103, Miami, Fla.; St. Paul Fire & Marine Ins. Co.	Feb. 20, 1981	Feb. 25, 1981	New Orleans, LA $10,000
Morflot American Shipping Inc., as agent for Balt-Gulf Lines, 67 Walnut Ave., Clark, NJ; Sentry Ins., A Mutual Co. D 3/2/81	Oct. 13, 1976	Nov. 1, 1976	San Francisco, CA $10,000
Morflot America Shipping Inc., as agent for Blasco Lines, 67 Walnut Ave., Clark, NJ; Sentry Ins. A Mutual Co. D 3/2/81	Oct. 13, 1976	Nov. 1, 1976	San Francisco, CA $10,000

Name of principal and surety	Date of bond	Date of approval	Filed with district director/area director/amount
Combined Maritime Agencies, Inc., 30 Broadway, New York, NY; American Motorists Ins. Co.	Feb. 23, 1981	Feb. 25, 1981	New York, NY $10,000
Eckert Overseas Agency, Inc., 19 Rector St., New York, NY; Federal Ins. Co. D 3/22/81	Mar. 21, 1972	Mar. 21, 1972	New York Seaport $10,000
Eldorado Nuclear Ltd., 215 John St., Port Hope, Ontario, Canada; Old Republic Ins. Co. (PB 7/26/71) D 7/26/81[1]	July 26, 1981	July 26, 1981	Detroit, MI $10,000
Hong Kong Islands Shipping Co. (U.S.A.) Ltd., 1521 Buena Vista Ave., P.O.B. 2453, Alameda, CA; Old Republic Ins. Co.	Mar. 2, 1981	Mar. 2, 1981	San Francisco, CA $10,000
Intercontinental Transportation Services Ltd, P.O. Box 797, Hamilton 5, Bermuda; Safeco Ins. Co. of America	Jan. 15, 1981	Feb. 10, 1981	Galveston, TX $50,000
Interocean Steamship, 465 California St., Rm 1001, San Francisco, CA; Old Republic Ins. Co.	Jan. 1, 1981	Feb. 2, 1981	San Francisco, CA $10,000
Jetero Freight Forwarders, Inc., P.O.B. 60612 AMF, Houston, TX; Washington International Ins. Co.	Feb. 10, 1981	Feb. 25, 1981	Houston, TX $10,000
J. D. MacDonald & Co., Inc, 230 Prescott St., Boston, MA; Washington International Ins. Co.	Feb. 11, 1981	Mar. 23, 1981	Portland, ME $10,000
Morflot American Shipping Inc. (See Balt-Gulf Lines)			
Morflot America Shipping, Inc. (See Blasco Lines)			
Ocean World Lines, Inc., 1 WTC, New York, NY; Washington International Insurance Co.	Apr. 8, 1981	Apr. 8, 1981	New York Seaport $10,000
Oceans Technology Company, 559 Holmes Blvd., Gretna, LA; Old Republic Ins. Co.	Apr. 6, 1981	Apr. 7, 1981	New Orleans, LA $10,000
Odd Berg/Bergship S/A, 4105 Plaza Towers Bldg., New Orleans, LA; Old Republic Ins. Co.	Mar. 26, 1981	Mar. 31, 1981	New Orleans, LA $10,000
Offshore Gases & Chemicals, Inc., 2002 Engineers Rd., Belle Chasse, LA; Old Republic Ins. Co.	Mar. 26, 1981	Feb. 27, 1981	New Orleans, LA $10,000
Philippines, Micronesia & Orient Navigation Co., d/b/a: P M & O Lines, 181 Fremont St., San Francisco, CA; Old Republic Ins. Co.	Feb. 18, 1981	Mar. 2, 1981	San Francisco, CA $10,000
Quigley & Manard, Inc., Peace Bridge, Buffalo, NY; Seaboard Surety Co. D 4/3/81	June 20, 1961	June 21, 1962	Buffalo, NY $10,000
Refricentro, Inc., 380 Barbosa Ave., Hato Rey, PR; Continental Casualty Co.	Jan. 29, 1981	Jan. 30, 1981	San Juan, PR $20,000
Frank Sinatra & Milton A. Rudin, dba: Somerset Wine Distributing Co., 3000 Pacific Ave., Long Beach, CA; St. Paul Fire & Marine Ins. Co. D 2/6/81	Jan. 28, 1977	Feb. 11, 1977	Los Angeles, CA $50,000

See footnote at end of table.

Name of principal and surety	Date of bond	Date of approval	Filed with district director/area director/amount
Uniroyal Inc., Middlebury, CT; American Home Assurance Co. D 4/15/81	Mar. 10, 1980	Mar. 31, 1980	New York Seaport $10,000

[1] Surety is St. Paul Fire & Marine Ins. Co.

BON-3-10

MARILYN G. MORRISON,
Director,
Carriers, Drawback and Bonds Division.

(T.D. 81-168)

(19 CFR Parts 103, 152, 175)

Customs Regulations Relating To Availability of Information

AGENCY: U.S. Customs Service, Department of the Treasury.

ACTION: Final rule.

SUMMARY: This document revises the Customs Regulations relating to the public disclosure of information. There have been substantial changes to the relevant law since publication of the prior regulations. The revision brings the regulations into conformity with the current law.

This action has been taken after publication of a notice of proposed rulemaking and careful analysis of public comment received.

These amendments do not constitute a major regulation within the meaning of Executive Order 12291, relating to Federal Regulation.

EFFECTIVE DATE: 7-24-81.

FOR FURTHER INFORMATION CONTACT: Steven I. Pinter, Freedom of Information and Privacy Branch, U.S. Customs Service, 1301 Constitution Avenue NW., Washington D.C. 20229 (202-566-8681).

SUPPLEMENTARY INFORMATION:

BACKGROUND

A proposed revision of Part 103, Customs Regulations (19 CFR Part 103), relating to the public disclosure of information was published in the Federal Register on August 20, 1979 (44 FR 48709). This revision was deemed necessary due to the amendments to the Freedom of Information Act by Public Law 93-502, 80 Stat. 1561,

and the conforming amendments to the Department of the Treasury regulations concerning public access to records (31 CFR Part 1) published in the Federal Register on February 20, 1975 (40 FR 7439).

Part 103 sets forth procedures whereby the public may obtain access to records created and maintained by the United States Customs Service. The procedures involve the publication of certain information in the Federal Register, the public inspection or copying of information, and the submission of specific requests for records to Headquarters, United States Customs Service, or to offices of the regional commissioners of Customs. Also included are procedures for appeal of an initial administrative determination to deny such a request and a uniform schedule of fees for the search and duplication of Customs records. Officers of the Customs Service who are responsible for making the initial and appellate determinations as to whether a request for records shall be granted are designated.

Exemptions from disclosure, conforming to the Freedom of Information Act amended by Public Law 93-502 are set forth.

DISCUSSION OF MAJOR COMMENTS

Comments received in response to publication of the proposed revision of Part 103 in the Federal Register (44 FR 48709) have been carefully analyzed and are summarized below.

The majority of comments were concerned primarily with the protection of confidential business information. These comments were critical of section 103.14 which permits limited access to information on vessel manifests to both accredited members of the press, and to the public and allows the publication of certain of this information. Generally, privileged or confidential information contained in vessel manifests is exempt from disclosure under section 103.12. In this regard, commenters believed that competitors could glean from vessel manifests and summary statistical reports shipping methods, ports of entry, sources of supply, volume cost and selling price of goods, and determine market expectations and plans for new markets. Concerns were expressed that this private data, developed at a cost to a firm, would become publicly available. According to these commenters, competitors would thereby gain a substantial market advantage. The commenters conceive that if one information service published identifying data for a shipment plus its quantity, and a second service published the data for the same shipment plus its price, a subscriber to both services would obtain the combination of information which Customs would not release to either the press or public.

Criticism is also raised that section 103.14 permits selective disclosure inasmuch as accredited members of the press are allowed to examine vessel manifests which the general public may not.

It is the position of the Customs Service that the proposed regulation adequately balances the interests of the parties involved by generally exempting from disclosure privileged or confidential information contained in vessel manifests, while still insuring relative ease of publication of legally available information. As an added precaution, section 103.14(d) permits, upon written application, a shipper, consignee, or importer to request, that its name be withheld from public disclosure. In addition, under section 103.14(b), a press representative must submit to Customs for review any copy or notation made from a vessel manifest. Therefore, although the press may examine information not available to the public, the ability to copy such information or take notes of such information is severely limited by section 103.14.

It is pertinent to note that, on the other hand, certain comments received oppose the suspension of disclosure provision as currently written inasmuch as it does not require some factual determination of specific harm to be made.

Parenthetically, it also must be noted that that portion of Treasury Decision 81-19, published in the Federal Register on January 29, 1981 (46 FR 9567), relating to vessel manifest disclosure requirements, has been incorporated into this document as section 103.14.

One commenter recommended that section 103.15, which provides for sanctions against Customs officers and employees for improper disclosure to exporters and importers, be broadened to encompass all unauthorized disclosures. In response to this comment, the language of section 103.15 has been changed to invoke sanctions for unauthorized disclosures to any person not authorized by law or regulation to receive the disclosed information.

In reference to judicial review of an administrative action on an information request, one commenter noted that the authority formerly possessed by the Civil Service Commission to investigate certain withholdings has been transferred to the Special Counsel, Merit Systems Protection Board. (Section 906(a)(10) of the Civil Service Reform Act of 1978). In response, appropriate changes in section 103.9 have been made.

PROCEDURAL CHANGES

In accordance with a change in the internal procedures in Customs Headquarters, the proposed section on the maintenance of files and records, which invested the Director, Entry Procedures and Penalties Division, at Headquarters with the responsibility for

maintaining files on information requests, has been deleted. Henceforth, information requests should be made at the Freedom of Information and Privacy Branch, Headquarters (section 103.5(d)), and the appropriate division director at Headquarters shall make the initial determination to grant or deny a request for a record maintained in that particular division (section 103.6(a)(2)). Appeal of an initial determination shall no longer be made to the Assistant Commissioner of Customs, but rather to the Director, Office of Regulations and Rulings (section 103.7).

Pursuant to Executive Order 12188 (45 FR 69273), which transferred responsibility for the administration of antidumping and countervailing duty laws to the Secretary of Commerce, references to records on antidumping and countervailing duty in section 103.11 have been deleted.

INAPPLICABILITY OF REGULATORY FLEXIBILITY ACT

This document is not subject to the provisions of the Regulatory Flexibility Act (5 U.S.C. 601-612) because the notice of proposed rulemaking on which the final rule is based was issued prior to January 1, 1981, the effective date of the Act.

DRAFTING INFORMATION

The principal authors of this document were Harold I. Loring and Todd J. Schneider, Office of Regulations and Rulings, U.S. Customs Service. However, personnel from other Customs offices participated in its development.

AMENDMENTS TO THE REGULATIONS

Parts 103, 152, and 175, Customs Regulations, (19 CFR Parts 103, 152, 175) are amended as set forth below.

WILLIAM T. ARCHEY,
Acting Commissioner of Customs.

Approved: May 7, 1981.
JOHN P. SIMPSON,
Acting Assistant Secretary of the Treasury.

(d) *Denial of request.* The Customs officer who denies a request for records (whether in whole or in part) shall mail written notice of the denial to the requester. The letter of notification shall contain (1) the physical location of the requested records, (2) the applicable exemption(s) and reason for not granting the request, (3) the name and title or position of the Customs officer who denied the request, (4) ad-

vice on the right to administrative appeal in accordance with § 103.7, and (5) the title and address of the Customs officer who is to decide any appeal.

(e) *Inability to locate records within time limits.* If a requested record cannot be located and evaluated within the initial 10-day period or the extension period allowed under § 103.8(a), the Customs officer who is responsible for the initial determination shall continue to search for the records. However, that officer shall also notify the requester of the facts and inform the requester that he or she may consider the notification to be a denial of access within the meaning of paragraph (d) of this section, and provide the requester with the address for the submission of an administrative appeal. The requester may also be invited, in the alternative, to agree to a voluntary extension of time in which to locate and evaluate the records. A voluntary extension of time does not waive a requester's right to appeal any ultimate denial of access or to appeal a failure to locate the records within the voluntary extension period.

§ 103.7 Administrative appeal of initial determination

(a) *To whom appeals should be submitted.* A requester may submit an administrative appeal to the Director, Office of Regulations and Rulings, within 35 days after the date of notification described in § 103.6 or the date of the letter transmitting the last records released, whichever is later. A requester shall mail or personally deliver an appeal to the United States Customs Service, 1301 Constitution Avenue, NW., Washington, D.C. 20229.

(b) *Form of appeal.* The Administrative appeal shall—

(1) Be in writing and signed by the requester;

(2) Have conspicuously printed on the face of the envelope the words "Freedom of Information Act Appeal";

(3) Reasonably describe, in accordance with § 103.5(e), the records to which the appeal relates;

(4) Set forth the address where the requester desires to be notified of the determination on appeal;

(5) Specify the date of the initial request and the date and control number of the letter denying the initial request; and

(6) Petition the Director, Office of Regulations and Rulings, to grant the request for records and state any arguments in support thereof.

(c) *Disposition of appeal.* The Customs officer or employee who receives an appeal shall stamp the date of receipt on the appeal and the stamped date is the date of receipt for purposes of the appeal. The Director, Office of Regulations and Rulings, shall acknowledge and advise the appellant of the date of receipt and of the date that a re-

sponse is due under this paragraph. The Director shall affirm the initial denial (in whole or in part) or grant the request for records and notify the appellant of that determination by letter mailed within 20 days (exclusive of Saturdays, Sunday, and legal public holidays) after the date of receipt of the appeal, unless extended pursuant to § 103.8(a). The purpose of the letter of denial is to inform the appellant of the reason for the denial and the right to judicial review of that denial under 5 U.S.C. 552(a)(4)(B). If the Director is unable to act on an appeal within the 20-day period (or any extension thereof pursuant to § 103.8(a)), the Director shall send written notice of that fact to the appellant. In those circumstances, an appellant is entitled to commence an action in a district court as provided in § 103.9 despite any continuation in the processing of an appeal. However, the appellant may also be invited, in the alternative, to agree to a voluntary extension of time in which to decide the appeal. A voluntary extension does not waive the right of the appellant to ultimately commence an action in a United States district court on the appellant's request.

§ 103.8 TIME EXTENSIONS.

(a) *Ten-day extension.* In unusual circumstances, the Customs Officer who is responsible for deciding an initial request or an appeal may extend the time limitations set in §§ 103.6 and 103.7 after written notice to the requester or appellant. This notice must state the reason for the extension and the date on which the determination is expected to be dispatched. Any extension or extensions of time are limited to a cumulative total of not more than 10 additional working days. (For example, if an extension pursuant to this paragraph is invoked in connection with an initial determination, any unused days of the extension period may be invoked in connection with the determination on administrative appeal by written notice from the Director, Office of Regulations and Rulings, who is to make the appellate determination. If no extension is sought for the initial determination, and extension of 10 days may be added to the ordinary 20-day period for appellant review.) Generally, extensions will be invoked only to the extent reasonably necessary to properly respond to a request. As used in this paragraph, "unusal circumstances" means at least one of the following:

(1) The need to search for and collect the requested records from field facilities or other establishments in buildings other than the building in which the office of the Customs officer to whom the request is made is located.

(2) The need to search for, collect, and appropriately examine a voluminous amount of separate and distinct records which are demanded in a single request.

best copy available

(3) The need for consultation, which shall be conducted with all practicable speed, with another Department or agency having a substanital interest in the determination of the request, among two or more constituent units within Department of the Treasury, or within the United States Customs Service (other than the legal staff or Public Affairs Division) having substantial subject-matter interest therein. Consultations with personnel of the Department of Justice concerned with requests for records under the Freedom of Information Act, as amended (5 U.S.C. 552), do not constitute a basis for an extension under this subparagraph.

(b) *Extension by judicial review.* If the United States Customs Service fails to comply with the time limitations specified in §§ 103.6 and 103.7 and the requester commences an action under § 103.9, the court in which the suit was initiated may retain jurisdiction and allow the United States Customs Service additional time to review its records, if the Customs Service shows the existence of exceptional circumstances and the exercise of due diligence in responding to the request.

§103.9 JUDICIAL REVIEW.

(a) *Failure to comply with time limitations.* If the United States Customs Service fails to comply with the time limitations specified in §§103.6, 103.7 or 103.8, a requester is considered to have exhausted the administrative remedies with respect to the request.

(b) *Procedure of initiating judicial review.* If a request for records is denied upon appeal pursuant to §103.7, or if no determination is made within the 10-day or 20-day periods specified in §§103.6 and 103.7, respectively, together with an extension pursuant to §103.8(a) or by agreement of the requester, the requester may commence an action under 5 U.S.C. 552(a)(4)(B) in a United States district court in the district (1) in which the requester resides, (2) in which the requester's principal place of business is located, (3) in which the records are situated, or (4) in the District of Columbia. Service of process in that action is governed by the Federal Rules of Civil Procedure (28 U.S.C. App.) applicable to actions against an agency of the United States. The Chief Counsel, United States Customs Service, 1301 Constitution Avenue, NW., Washington, D.C. 20229 is the officer designated to receive any service of process.

(c) *Proceeding against officer or employee.* Under 5 U.S.C. 552(a)(4)(F), the Special Counsel, Merit Systems Protection Board, has authority, upon the issuance of a written finding by a court that the Customs officer or employee who was primarily responsible for withholding a record may have acted arbitrarily or capriciously, to initiate a proceeding to determine whether disciplinary action is

warranted against that officer or employee. The Special Counsel, after investigation and consideration of the evidence submitted, submits its findings and recommendations to the Commissioner of Customs and the Secretary of the Treasury. The Special Counsel also sends copies of the findings and recommendations to the officer or employee or the representative of that officer or employee.

§103.10 FEES FOR SERVICES.

(a) *In general.* (1) The fees prescribed in this section are for search and duplication and under no circumstances is there a fee for determining whether an exemption can or should be asserted, for deleting exempt matter being withheld from records to be furnished, or for monitoring a requester's inspection of records made available in this manner.

(2) Customs publications which are available for sale through the Government Printing Office are on the shelves of the reading rooms and similar public inspection facilities, but those publications are not available for sale at those facilities. Those publications may be purchased from the Superintendent of Documents, U.S. Government Printing Office, Washington, D.C. 20402. However, pages from those publications may be copied at the public inspection facilities in accordance with the schedule of fees set forth in paragraph (g) of this section.

(b) *When charged.* Unless charges are inapplicable, or are waived or reduced in accordance with paragraph (c) or (d) of this section, fees are charged in accordance with the scheduled contained in paragraph (g) of this section for services rendered in responding to requests for records.

(c) *Services performed without charge*—(1) *Certain classes of records.* The Commissioner of Customs or an of the Commissioner's designees may determine, under the rulemaking procedures of 5 U.S.C. 553, which classes or records under their control may be provided to the public without charge, or at a reduced charge.

—(2) *Records provided to government units.* Normaily, in accordance with paragraph (d)(2)(ii) of this section, no charge is made for providing records to Federal, State, or foreign governments, international governmental organizations, or local governmental agencies or offices.

(d) *Waiver or reduction of fees*—(1) *Records unavailable or exempt.* Fees may be waived or reduced at the discretion of the Customs officer who determines the availability of records, if the record is not found or is exempted from disclosure.

(2) *Request for waiver or reduction of fees.* Fees may be waived or reduced on a case by case basis in accordance with this paragraph

by the Customs officer who determines whether to release the record. A request for a waiver or reduction of fees must be in writing. The appropriate Customs officer shall waive or reduce a fee if the officer determines either that—

(i) The records are being requested by, or on behalf of, an individual who in writing, under penalty or perjury, demonstrates indigency to the satisfaction of the officer and that compliance with the request does not constitute an unreasonable burden on the United States Customs Service; or

(ii) A waiver or reduction of the fees is in the public interest because furnishing the information primarily benefits the general public.

(3) *Appeal from denial of request.* An appeal from a denial of a request for waiver or reduction of fees is decided under the criteria set forth in subparagraph (2) of this paragraph by the Director, Office of Regulations and Rulings. An appeal shall be in writing and mailed to the Director within 35 days of the denial of the initial request for waiver or reduction. An appeal under this paragraph is entitled to a prompt decision.

(e) *Avoidance of unexpected fees.* In order to protect a requester from unexpected fees, a requester is required to state in the request an agreement to pay the fees determined in accordance with paragraph (g) of this section or to state an acceptable upper limit on the cost of processing the request. If the fee for processing the request is estimated to exceed that limit, or if the requester has failed to state a limit and the cost is estimated to exceed $50 and there is no decision to waive or reduce the fees, the appropriate Customs officer shall—

(1) Inform the requester of the estimated costs;

(2) Extend an offer to the requester to confer with Customs personnel in an attempt to reformulate the request in a manner which will reduce the fee and still meet the needs of the requester; and

(3) Inform the requester that the running of the time period within which a determination on the request must be made is suspended until the request is reformulated in manner to reduce the cost or until the requester pays or agrees to pay the estimated cost.

(f) *Form of payment.* (1) A requester shall pay by a check or money order that is payable to the order of the United States Customs Service.

(2) If the estimated cost exceeds $50, the requester may be required to enter into a contract for the payment of actual costs, as determined in accordance with paragraph (g) of this section, which contract may provide for prepayment of the estimated costs in whole or in part.

(g) *Amount to be charged for specified services.* A fee for a service performed is imposed and collected as set forth in this paragraph. The

Commissioner of Customs or the Commissioner's designee may set an appropriate fee for any service not described below. These extraordinary fees are imposed and collected pursuant to 31 U.S.C. 483a, subject to the constraints imposed by 5 U.S.C. 552(a)(4)(A).

(1) *Duplication.* (i) The charge for photocopies per page up to 8½″ × 14″ is at the rate of $0.10 each, except that no charge is imposed for copying 10 pages or less when less than one hour is spent in locating the records requested.

(ii) The charge for photographs, films and other materials is their actual cost. The United States Customs Service may furnish the records to be released to a private contractor for copying and charge the person requesting the records the actual cost of duplication charged by the private contractor. No fee is charged where the requester furnishes the supplies and equipment and makes the copies at the Government location.

(2) *Unpriced printed materials.* The charge for unpriced printed material, which is available at the location where requested and which does not require duplication for copies to be furnished, is at the rate of $0.25 for each twenty-five pages or fraction thereof.

(3) *Search services.* The charge for services of personnel involved in locating records is $5 for each hour or fraction thereof, except that no charge is imposed for a search of less than one hour. Where a computer search is required because of the nature of the records sought and the manner in which such records are stored, the fee is $5 for each hour or fraction thereof of personnel time associated with the search plus the actual cost of extracting the stored information in the format in which it is normally produced. This actual cost of extracting information is based on computer time and supplies necessary to comply with the request.

(4) *Searches requiring travel or transportation.* The charge for transporting a record from one location to another, or for transporting a Customs officer or employee to the site of requested records when it is necessary to locate rather than examine the records, is the actual cost of the transportation.

§103.11 Specific Customs Service records subject to disclosure.

(a) *Administrative staff manuals and instructions.* Except as exempted by §103.12, all administrative staff manuals and instructions to staff that affect any member of the public, and indexes thereto, are available for public inspection and copying in the United States Customs Service public reference facilities (see §103.1), including the following:

Catalogue of Customs Forms.
Computer printout of precedent cases decided by the Office of Regulations and Rulings, Headquarters, United States Customs Service.

Customs Information Exchange Rulings and Rulings issued by the Office of Regulations and Rulings organized chronologically by year, with identifying data deleted pursuant to §§103.12 and 103.14.
Customs Simplification Act (C.S.A.) Series Letters and Index (identifying information deleted pursuant to § § 103.12 and 103.14).
Customs Statistical Manual.
Import Requirements on Articles Assembled Abroad from U.S. Components (Item 807.00, TSUS).
KWIC Index of United States Customs Service circulars letters, and supplementary monthly checklists.
Synopsis of Decisions of the Duty Assessment Process.

(b) *Other Customs Records.* In general, all other documents issued by the Secretary of the Treasury, the Commissioner of Customs, or other officers of the Department of the Treasury or of the United States Customs Service in matters administered by the United States Customs Service, if reasonably described, and unless exempted from disclosure under §103.12, are available. The classes of records of the United States Customs Service which may be made available under this paragraph upon written request submitted in accordance with the § 103.5 include, but are not limited to following:

(1) Records relating to—(i) Comments submitted by private parties (which are not considered to include foreign governments) in response to a published notice of proposed rulemaking and of proposed changes in tariff classification, unless the submitter states that the information is privileged or confidential, giving reasons therefor, and the Commissioner of Customs agrees that the information contained therein is exempt from disclosure under § 103.12;

(ii) Advisory committees on Customs matters;

(iii) Rosters of licensed customhouse brokers;

(iv) Names of individual licensed customhouse brokers;

(v) Names and titles of all Customs personnel;

(vi) Performance awards;

(vii) Suggestion awards;

(viii) The administration of and decisions concerning import quotas; and

(ix) Customs laboratory methods.

(2) Decisions concerning—(i) Matters arising under the Tariff Schedules of the United States (19 U.S.C. 1202);

(ii) Whether or not specific items, articles, or merchandise qualify for entry under the Trade Fair Act of 1959 (19 U.S.C. 1751 *et seq.*), and the disposition of articles previously entered under the Trade Fair Act; Customs participation and assistance at Trade Fairs;

(iii) The dutiable status of gifts pursuant to section 321, Tariff Act of 1930, as amended (19 U.S.C. 1321);

(iv) The eligibility of vehicles used in international traffic pursuant

to section 332(a), Tariff Act of 1930 (19 U.S.C. 1322(a)), and other instruments of international traffic generally for duty-free entry;

(v) Prohibition from entry of merchandise produced by convict, forced, or indentured labor (19 U.S.C. 1307);

(vi) The entry or valuation of merchandise;

(vii) Liens in cases arising under section 564, Tariff Act of 1930, as amended (19 U.S.C. 1564);

(viii) Bills of lading, carriers' certificates, or rights in respect of merchandise, cases arising under section 483 or 484(c), (h), or (i), Tariff Act of 1930, as amended (19 U.S.C. 1483, 1484(c),(h), (i));

(ix) Trademarks, trade names, copyrights, patents, and related matters;

(x) Country of origin marking requirements of section 304, Tariff Act of 1930, as amended (19 U.S.C. 1304);

(xi) Psittacine or other birds, bird feathers, bird skins, monkeys, dogs, cats, and other animals and pets prohibited entry or subject to restrictions and controls on entry;

(xii) Entry of articles admitted temporarily free of duty under bond as provided in schedule 8, part 5C, Tariff Schedules of the United States (19 U.S.C. 1202), and entry of articles admitted temporarily free of duty under A.T.A. Carnets, as provided in § 114.22(a) and (b) of this chapter;

(xiii) Tonnage taxes (regular, special, and discriminatory) and light money;

(xiv) The entry, clearance, and use of vessels and permits for them to proceed coastwise;

(xv) The regulation of vessels in the foreign, coastal, fishing, and other trades of the United States;

(xvi) The limitation of the use of foreign vessels in waters under the jurisdiction of the United States;

(xvii) Salvage operations by vessels within the territorial waters of the United States (46 U.S.C. 316);

(xviii) The assessment and collection of duties on equipment or repairs of vessels or aircraft under section 466, Tariff Act of 1930, as amemded (19 U.S.C. 1466), and the remission or refund of such duties;

(xix) Requirements for entry, clearance, and use of aircraft;

(xx) The arrival or departure and the use of motor vehicles, railway trains, or other vehicles;

(xxi) Adequacy of premises at Customs bonded warehouses and control of the merchandise stored therein;

(xxii) Use of protective Customs seals and labels; and

(xxiii) The itineraries of foreign vessels which had been submitted for an advisory ruling to determine whether the primary object

of a contemplated voyage would be considered to unlawful coastwise trade (see § 4.80a(d) of this chapter).

§ 103.12 EXEMPTIONS.

Pursuant to 5 U.S.C. 552(b), the disclosure requirements of 5 U.S.C. 552(a) are not applicable to U.S. Customs Service records which relate to the following:

(a) *Matters kept secret pursuant to Executive Order.* Matters specifically authorized under criteria established by an Executive Order to be kept secret in the interest of national defense or foreign policy and which are, in fact, properly classified pursuant to such Executive Order (see 31 CFR Part 2).

(b) *Certain internal rules and procedures.* Information relating solely to the internal personnel rules and practices of an agency.

(c) *Matters exempt from disclosure by statute.* Information specifically exempted from disclosure by statute (other than 5 U.S.C. 552b), if the statute (1) requires that the matters be withheld from the public in such a manner as to leave no discretion on the issue, or (2) establishes particular criteria for withholding or refers to particular types of matters to be withheld.

(d) *Privileged or confidential information.* Trade secrets and commercial or financial information obtained from any person which is privileged or confidential.

(e) *Certain inter-agency or intra-agency correspondence.* Inter-agency or intra-agency memoranda or letters which would not be available by law to a private party in litigation with the agency.

(f) *Material involving personal privacy.* Personnel and medical files and similar files the disclosure of which would constitute a clearly unwarranted invasion of personal privacy.

(g) *Certain investigatory records.* Investigatory records compiled for law enforcement purposes, but only to the extent that the production of such records would—

(1) Interfere with enforcement proceedings;

(2) Deprive a person of a right to a fair trial or an impartial adjudication;

(3) Constitute an unwarranted invasion of personal privacy;

(4) Disclose the identity of a confidential source and, in the case of a record compiled by a criminal law enforcement authority in the course of a criminal investigation, or by an agency conducting a lawful national security intelligence investigation, confidential information furnished only by the confidential source;

(5) Disclose investigative techniques and procedures; or

(6) Endanger the life or physical security of law enforcement personnel.

349-001 O - 81 - 3

§ 103.13 SEGREGABILITY OF RECORDS.

(a) *Reasonably segregable portions.* Where the record requested contains information which is exempt from disclosure under 5 U.S.C. 552(b) and section 103.12, the reasonably segregable portions of the record shall be made available to the requester. For purposes of this section, the term "reasonably segregable portions" means those portions of the record: (1) which are not exempt from disclosure by 5 U.S.C. 552(b) and section 103.12; (2) which, after deletion of the exempt material, still convey meaningful and nonmisleading information; and (3) from which it can reasonably be assumed that a skillful and knowledgeable person could not reconstruct the exempt portions.

(b) *Petitions by American manufacturers, producers, or wholesalers.* Identifying data is not to be deleted from petitions filed by American manufacturers, producers, and wholesalers pursuant to section 516, Tariff Act of 1930, as amended (19 U.S.C. 1516). See Part 175 of this chapter.

§ 103.14 INFORMATION ON VESSEL MANIFESTS AND SUMMARY STATISTICAL REPORTS.

(a) *Disclosure to members of the press.* Although the following classes of information are exempt from the requirement of disclosure under the provisions of § 103.12, accredited representatives of the press, including newspapers, commercial magazines, trade journals, and similar publications may be permitted to examine vessel maifests and summary statistical reports of imports and exports and to copy therefrom for publication information and data not of a confidential nature, subject to the following rules:

(1) Of the information and data appearing on outward manifests, only the name and address of the shipper, general character of the cargo, number of packages and gross weight, name of vessel or carrier, port of exit, port of destination, and country of destination may be copied and published. However, if the Secretary of the Treasury makes an affirmative finding on a shipment-by-shipment basis that disclosure of the above information is likely to pose a threat of personal injury or property damage, that information shall not be disclosed to the public.

(2) Commercial or financial information, such as the names of the consignees, and marks and numbers shall not be copied from outward manifests or any other papers.

(3) Of the information shown on inward manifests, only the name of the consignee, the general character of the commodity, the quantity (or value), name of vessel, and the country of dispatch shall be copied and published. When an inward manifest shows both quantity and

value of the commodity, either may be copied and published, but not both in any instance.

(b) *Review of data.* All copies and notations from inward or out ward manifests shall be submitted for examination by a Customs officer designated for that purpose.

(c) *Disclosure to the public.* Members of the public shall be permitted to obtain information from, but not examine, vessel manifests, subject to the rules set forth in paragraphs (a) and (b) of this section. However, importers and exporters or their duly authorized brokers, attorneys, or agents may be permitted to examine manifests with respect to any consignment of goods in which they have a proper and legal interest as principal or agent, but shall not be permitted to make any general examination of manifests or make any copies or notations from them except with reference to the particular importation or exportation in which they have a proper and legal interest.

(d) *Suspension of disclosure.* (1) Inward manifest. Except as provided in §103.17, upon written application of a consignee or importer, access to the name of such consignee or importer, on an inward manifest will thereafter be refused.

(2) Outward manifest. If a shipper wishes to request confidential treatment by Customs of the shipper's name and address contained in an outward manifest, the following procedure shall be followed:

(i) A shipper, or authorized employee or official of the shipper, must submit a certification claiming confidential treatment of the shipper's name and address. The certification shall include the shipper's Internal Revenue Service Employer Number, if available.

(ii) There is no prescribed format for a certification.

(iii) The certification must be submitted to the Regional Commissioner for the Region in which the port of exportation is located.

(iv) Each certification will be valid for a period of two (2) years from the date of its submission to Customs.

(3) If any individual shall abuse the privilege granted him of examining inward and outward manifests or shall make any improper use of any information or data obtained from such manifests or other papers filed in the customhouse, both he and the party or publication which he represents shall thereafter be denied access to such papers.

§ 103.15 Sanctions for improper actions by Customs officers or employees.

(a) The improper disclosure of the confidential information contained in Customs documents, or the disclosure of information relative to the business of one importer or exporter that is acquired by

a Customs officer or employee in an official capacity to any person not authorized by law or regulations to receive this information is a ground for dismissal from the United States Customs Service, suspension, or other disciplinary action, and if done for a valuable consideration subjects that person to criminal prosecution.

(b) Sanctions for improper denials of information by Customs officers or employees are set forth in § 103.9(c).

§ 103.16 INFORMATION CONCERNING FINES, PENALTIES, AND FORFEITURES CASES.

Except as otherwise provided in these regulations or in other directives (including those published as Treasury Decisions), district directors of Customs and other Customs officers shall refrain from disclosing facts concerning seizures, investigations, and other pending cases until Customs action is completed. After the penalty proceeding is closed by payment of the claim amount, payment of a mitigated amount, or judicial action, the identity of the violator, the section of the law violated, the amount of penalty assessed, loss of revenue, mitigated amount (if applicable), and the amount of money paid may be disclosed to the public by the appropriate district director of Customs. Public disclosure of any other item of information concerning such cases, whether open or closed, shall only be made in conformance with the procedures provided in § 103.5.

§ 103.17 TESTIMONY OR THE PRODUCTION OF DOCUMENTS IN COURT.

(a) *General.* In answer to a legal process or demand from a court issued on behalf of the United States or an officer thereof, Customs officers or employees shall produce in court, and may testify with respect to, any official Customs papers or documents demanded which are in Customs custody. When the process or demand is issued on behalf of a party other than the United States, Customs officers or employees shall produce in court, and may testify with respect to, those papers and documents, but only to the extent that the party on whose behalf the papers or documents are demanded is permitted under these regulations to inspect or copy those papers or documents. An exception to the above two rules may be made only on the written order of the Commissioner of Customs or the Commissioner's designee. When requested, copies may be authenticated pursuant to the provisions of section 1733, title 28, United States Code.

(b) *Request of Customs Court.* Except as stated in § 103.12, nothing in this part precludes Customs officers or employees from producing in the United States Customs Court, any Customs papers or documents, in Customs custody, or from testifying or otherwise rendering all proper assistance to the court in proceedings before it when request therefor is made by the court; nor from furnishing to counsel for the

United States information in, and permitting inspection of, Customs papers and documents requested by such counsel, nor from testifying on behalf of the United States or otherwise assisting such counsel in the performance of official duties.

(c) *Subpoena or subpoena duces tecum.* Upon being served with a subpoena or subpoena duces tecum from a court or court officer calling for testimony or the production of papers or documents in cases not covered by paragraph (a) or (b) of this section, or in cases where the testimony or documents desired would disclose matters the disclosure of which would be contrary to these regulations, the Customs officer involved shall refer the matter to Headquarters for instructions, with a report that specifically describes the testimony or documents desired. The Customs officer involved shall include in that report his or her opinion on whether the giving of the testimony or the furnishing of the documents would disclose information not permitted to be disclosed under these regulations. That officer also shall state in what particulars, if any, the disclosure of the information and work incidental to that disclosure would interfere with the orderly conduct of Customs business. If instructions are not received prior to the date set for appearance or production of documents, or if the Commissioner of Customs or the Commissioner's designee declines to permit their production or the disclosure of the information contained therein or otherwise within the knowledge of the Customs officer or employee whose testimony is requested, the Customs officer or employee shall appear in court or before the officer concerned in answer to the subpoena and respectfully decline to produce the documents called for or to testify, except to the extent specifically authorized elsewhere in this section, citiong this regulation as authority for the refusal. If the matter has not already been referred to Headquarters for instructions, the Customs officer or employee shall advise the court or officer that it will be so referred.

(d) *In camera inspection of records.* Nothing in this section authorizes Customs officers or employees to withhold records from a court, pursuant to its order, for *in camera* inspection to determine the propriety of claimed exemptions to disclosure.

(R.S. 251, as amended, sec. 624, 46 Stat. 759 (5 U.S.C. 301; 19 U.S.C. 66, 1624))

PART 152—CLASSIFICATION AND APPRAISEMENT OF MERCHANDISE

§ 152.42 [AMENDED]

Section 152.42(b) of the Customs Regulations (19 CFR 152.42(b)) is amended by substituting "103.12(d)" for "103.7(d) in the last sentence.

(R.S. 251, as amended, sec. 624, 46 Stat. 759 (19 U.S.C. 66, 1624))

PART 175—PETITIONS BY AMERICAN MANUFACTURERS, PRODUCERS, AND WHOLESALERS

§ 175.21 [AMENDED]

Section 175.21(b) of the Customs Regulations (19 CFR 175.21(b)) is amended by substituting "103.11(b)" for "103.8(b)" and by substitution "103.12(d)" for "103.10".

(R.S. 251, as amended, sec. 624, 46 Stat. 759 (19 U.S.C. 66, 1624))

PARALLEL REFERENCE TABLE

(This table shows the relation of sections in new Part 103 to 19 CFR Part 103)

Proposed section	*19 CFR section*
103.0	103.0.
103.1	103.1.
103.2(a)	New.
103.2(b)	New.
103.3(a)	New.
103.3(b)	New.
103.4(a)	New.
103.4(b)	New.
103.4(c)	New.
103.4(d)	103.4(b); new.
103.4(e)	New.
103.5(a)	103.2 (b), (c), and (d); new.
103.5(b)	103.2(e); new.
103.5(c)	103.2 (b) and (c); new.
103.5(d)	103.2 (a); new.
103.5(e)	103.2 (d); new.
103.5(f)	New.
103.5(g)	New.
103.5(h)	103.6(c).
103.6(a)	103.2(f), 103.3(a).
103.6(b)	New.
103.6(c)	New.
103.6(d)	New.
103.6(e)	103.4(d); new.
103.7(a)	103.5(a); new.
103.7(b)	New.
103.7(c)	103.5 (b) and (c); new.
103.8(a)	New.
103.8(b)	New.
103.9(a)	New.
103.9(b)	103.4(c)(2); new.
103.9(c)	New.

PARALLEL REFERENCE TABLE—Continued

Proposed section	*19 CFR section*
103.10(a)	New.
103.10(b)	103.9(b); new.
103.10(c)	103.9(c); new.
103.10(d)	New.
103.10(e)	New.
103.10(f)	New.
103.10(g)	103.9(b); new.
103.11(a)	103.7.
103.11(b)	103.8 (a) and (b).
103.12(a)	103.10(a); new.
103.12(b)	103.10(b); new.
103.12(c)	New.
103.12(d)	103.10(d).
103.12(e)	103.10(e).
103.12(f)	103.10(f).
103.12(g)	103.10(g); new.
103.13(a)	New.
103.13(b)	New.
103.14(a)	103.11(a).
103.14(b)	103.11(b).
103.14(c)	103.11(c).
103.14(d)	103.11(d).
103.15(a)	103.12.
103.15(b)	New.
103.16	103.13.
103.17(a)	103.14(a).
103.17(b)	103.14(b).
103.17(c)	103.14(c).
103.17(d)	New.

PARALLEL REFERENCE TABLE

(This table shows the relations of the old sections to the new sections in Part 103)

Old	*New*
103.0	103.0.
103.1	103.1.
103.2(a)	103.5(d); 103.6(a).
103.2(b)-(d)	103.5 (a), (c), (e).
103.2(e)	103.5(b).
103.2(f)	103.6(a).
103.4(b)	103.4(d).
103.4(c)(2)	103.9(b).

PARALLEL REFERENCE TABLE—Continued

103.4(d)	103.6(e).
103.5(a)	103.7(a).
103.5 (b), (c)	103.7(c).
103.6 (a), (b)	Deleted.
103.6(c)	103.5(h).
103.7	103.11(a).
103.8 (a), (b)	103.11(b).
103.9(b)	103.10(b); 103.10(g).
103.9(c)	103.10(c).
103.10(a)	103.12(a).
103.10(b)	103.12(b).
103.10(d)	103.12(d).
103.10(e)	103.12(e).
103.10(f)	103.12(f).
103.10(g)	103,12(g).
103.11(a)	103.14(a).
103.11(b)	103.14(b).
103.11(c)	103.14(c).
103.11(d)	103.14(d).
103.12	103.15(a).
103.13	103.16.
103.14(a)-(c)	103.17(a)-(c).

[Published in the Federal Register, June 24, 1981 (46 FR 32564)]

(T.D. 81-169)

Bonds

Approval of carrier's bond, Customs Form 3587; amendment of T.D. 80-278

T.D. 80-278 relating to the temporary approval of the Carrier's Bond of the following principal is hereby amended as necessary to show that such bond has been permanently approved as noted below.

Dated: June 12, 1981.

Principal:	*Effective date of permanent authority*
B & W Express	Apr. 30, 1981

GEORGE C. STEUART
(For Marilyn G. Morrison, Director,
Carriers, Drawback and Bonds Division).

(T.D. 81-170) 19 CFR Part 101

Amendments to the Customs Regulations Relating to the Field Organization of the Customs Service

AGENCY: U.S. Customs Service, Department of the Treasury.

ACTION: Final rule.

SUMMARY: This notice changes the field organization of the Customs Service by establishing a new port of entry at Austin, Texas, in the Dallas/Fort Worth, Texas, Customs district (Region VI). To accommodate the new Austin port, this notice also revises the Dallas/Fort Worth district limits. The changes will enable Customs to keep pace with the significant increase in Customs-related activities which has occurred in central Texas during the past decade.

EFFECTIVE DATE: 7-23-81.

FOR FURTHER INFORMATION CONTACT: Richard C. Coleman, Office of Inspection, U.S. Customs Service, 1301 Constitution Avenue NW., Washington, D.C. 20229 (202-566-8157).

SUPPLEMENTARY INFORMATION:

BACKGROUND

Austin, the State Capital of Texas, rapidly is becoming the center of international trade in central Texas. During the last decade, the area attracted many new manufacturing companies, including major electronics firms, high technology businesses, and other leading corporations producing a variety of products for distribution in markets in Europe, the Middle East, and Central and South America. In the last 5 years, the volume of merchandise imported into Austin quadrupled; the volume of merchandise exported more than tripled.

Presently, approximately 42 percent of imported merchandise destined for Austin is entered through the Customs port of entry at Houston, Texas, 162 miles away. Another 20 percent is entered through the Customs port of entry at San Antonio, Texas, 77 miles away. Transporting merchandise from these locations to Austin substantially increases distribution and transportation costs and delays delivery of the merchandise to its ultimate destination.

Following a review of Customs activity in the area, Customs determined that establishing a Customs port of entry at Austin would: (1) reduce distribution and transportation costs and reduce the travel time for imported goods destined for Austin; (2) provide the basis for initiating scheduled international flights between Austin and foreign cities; and (3) enable Customs to obtain more efficient

use of its personnel, facilities, and resources in providing service to importers in the Austin area.

Accordingly, to keep pace with the expanding needs of Customs-related activities in central Texas and to provide better service to carriers, importers, and the public, Customs published a notice in the Federal Register on March 18, 1981 (46 FR 17228), proposing to establish a new port of entry at Austin, Texas, in the Dallas/Fort Worth, Texas, Customs district (Region VI).

To accommodate the new Austin port of entry in the Dallas/Fort Worth district, the notice also proposed to revise the Dallas/Fort Worth district limits to include the State of Oklahoma, and those parts of the State of Texas lying north of lat. 32° N., and within the area north of lat. 30° N., west of 97° W. long. and east of 99° W. long.

Only one comment was received in response to the notice. The commenter opposes the change because he believes that Customs should not be establishing new ports of entry anywhere at this time because it would increase operational costs to the Customs Service at a time when governmental spending restraints are required. He also suggests that Customs set forth minimum criteria for the establishment and maintenance of ports of entry.

One aspect of Customs mission is to provide service to the public when and where it is required. The establishment of new ports of entry in various locations throughout the country is a necessary response to the public demand for increased Customs service. Further, Customs does have minimum workload and facility standards for the establishment of new ports of entry which are applied to prevent the unjustified proliferation of new ports. Prior to establishing ports of entry, Customs carefully reviews the data submitted in support of each application to verify that it meets the criteria. The Austin application was scrutinized and an independent Customs analysis of the potential Customs workload at Austin verified that it met Customs standards for the establishment of a new port of entry.

Accordingly, Customs has determined to adopt the changes as proposed.

CHANGES IN THE CUSTOMS FIELD ORGANIZATION

Under the authority vested in the President by section 1 of the Act of August 1, 1914, 38 Stat. 623, as amended (19 U.S.C. 2), and delegated to the Secretary of the Treasury by Executive Order No. 10289, September 17, 1951 (3 CFR 1949–1953 Comp., Ch. II), and pursuant to authority provided by Treasury Department Order No. 101–5 (46 FR 9336), a new Customs port of entry is established at Austin, Texas, in the Dallas/Fort Worth, Texas, Customs district. The geographical boundaries of the Austin port of entry encompass

all of the territory within the corporate boundaries of the city of Austin, Texas. In addition, the limits of the Dallas/Fort Worth district are revised to include the State of Oklahoma, and those parts of the State of Texas lying north of lat. 32° N., and within the area north of lat. 30° N., west of 97° W. long. and east of 99° W. long.

AMENDMENTS TO THE REGULATIONS

To reflect these changes, section 101.3(b), Customs Regulations (19 CFR 101.3(b)), is amended by: (1) adding "Austin, Texas (T.D. 81–170)" following "Amarillo, Texas (T.D. 75–129)" in the list of ports of entry in the Dallas/Fort Worth district, and (2) changing the description of the Dallas/Fort Worth district limits to read "The State of Oklahoma, and those parts of the State of Texas lying north of lat. 32° N., and within the area north of lat. 30° N., west of 97° W. long. and east of 99° W. long."

EXECUTIVE ORDER 12291

Because this will not result in a "major rule" as defined in section 1(b) of Executive Order 12291, the regulatory impact analysis and review prescribed by section 3 of the Executive Order is not required.

REGULATORY FLEXIBILITY ACT

Pursuant to the provisions of section 605(b) of the Regulatory Flexibility Act (P.L. 96–354, 5 U.S.C. 601 et. seq.), the Secretary of the Treasury has determined that the regulations set forth in this document will not have a significant economic impact on a substantial number of small entities. Accordingly, these regulations are not subject to the regulatory analysis or other requirements of 5 U.S.C. 603 and 604.

Customs routinely establishes, expands, and consolidates Customs ports of entry throughout the United States to accommodate the volume of Customs-related activity in various parts of the country. Although this amendment may have a limited effect upon some small entities in central Texas, it is not expected to be significant because the establishment of Customs ports of entry in other locations has not had a significant economic impact upon substantial number of small entities to the extent contemplated by the Regulatory Flexibility Act.

DRAFTING INFORMATION

The principal author of this document was Lawrence P. Dunham, Regulations and Information Division, Office of Regulations and Rulings, U.S. Customs Service. However, personnel from other Customs offices participated in its development.

Dated: June 9, 1981.

JOHN P. SIMPSON,
Acting Assistant Secretary of the Treasury.

Recent Unpublished Customs Service Decisions

The following listing of recent administrative decisions issued by the Office of Regulations and Rulings, U.S. Customs Service, and not otherwise published, is published for the information of Customs officers and the importing community. Although the decisions are not of sufficient general interest to warrant publication as Treasury Decisions, the listing describes the issues involved and is intended to aid Customs officers and concerned members of the public in identifying matters of interest which recently have been considered by the Office of Regulations and Rulings.

A copy of any decision included in this listing, identified by its date and file number, may be obtained in a form appropriate for public distribution upon written request to the Office of Regulations and Rulings, Attention: Legal Retrieval and Dissemination Branch, Room 2404, U.S. Customs Service, 1301 Constitution Avenue, N.W., Washington, D.C. 20229. These copies will be made available at a cost to the requester of $0.10 per page. However, the Customs Service will waive this charge if the total number of pages copied is ten or less.

Decisions listed in earlier issues of the Customs Bulletin, through February 2, 1981 are available in microfiche format at a cost of $30.99** ($0.15 per sheet of fiche). It is anticipated that additions to the microfiche will be made quarterly and subscriptions are available. Requests for the microfiche now available and for subscriptions should be directed to the Legal Retrieval and Dissemination Branch. Subscribers will automatically receive updates as they are issued and will be billed accordingly.

Dated: June 17, 1981.

B. JAMES FRITZ,
Director,
Regulations Control and Disclosure Law Division.

Date of decision	File No.	Issue
05–14–81	105080	Vessels: A foreign built, U.S.-flag vessel may take fish beyond the 200 mile fishery conservation zone but is prohibited from landing the fish in the U.S.

Date of decision	File No.	Issue
05-22-81	105085	Vessels: denial of clearance of foreign vessels due to lack register or certificate of nationality
05-20-81	105099	Instruments of International Traffic: environmental data buoys with components and spare parts
05-15-81	105160	Vessels: cargo unladen at point in U.S. other than point of lading constitutes a violation of 46 U.S.C. 883
05-27-81	105166	Vessels: passengers transported by a foreign-flag vessel, on cruise, between ports or places in the U.S., is not coastwise transportation in violation of 46 U.S.C. 289
05-22-81	105169	Vessels: material of no value transported by a foreign built vessel for disposal is not a violation of the coastwise laws: 46 U.S.C. 883
05-28-81	055115	Classification: synthetic woven textiles
03-04-81	061716	Classification: refractories (531.27, 531.39)
03-10-81	061968	Classification: ceramic lamps (534.87, 534.94, 688.40, 772.15)
05-12-81	065716	Classification: ladies shoes (700.60)
03-27-81	067139	Classification: batik wall hangings (366.79, 765.25)
03-27-81	067146	Classification: plastic trays and lipstick material comprising cosmetic kits (800.00, 807.00)
03-27-81	067147	Classification: hanging cloth scenery (586.04, 851.15)
03-26-81	067165	Classification: seat back and cushion assemblies (727.06)
05-11-81	068016	Classification: word puzzle books (735.20)
05-08-81	542351	Classification: dutiability of royalty payments
05-08-81	542422	Value: whether a discount based on the number of units initially ordered is part of the freely offered price for purposes of determining statutory export value
03-26-81	800119	Classification: pharmaceutical intermediate (413.51)
04-14-81	800161	Classification: fiberglass items (770.10)
04-14-81	800197	Classification: grain aeration system components (389.62, 661.06, 657.25, 666.00, 680.95, 774.55, 870.40)
05-05-81	800237	Classification: DECA concentrate (407.16)
04-14-81	800262	Classification: toy figure (737.95)
04-28-81	800293	Classification: rubber soled boat shoes (700.60, 700.63, 700.71)
05-08-81	800314	Classification: grain dryer kit (666.00, 685.90, 870.40)
04-15-81	800345	Classification: jolly chimp toy figure (737.35)
04-20-81	800352	Classification: forging billets for stabilizers (606.69, 664.08)
04-21-81	800373	Classification: plastic air etcher (772.15)
04-14-81	800377	Classification: oxygen absorbers used in food and textile preservation (657.25)
04-14-81	800379	Classification: zipper tape (347.70)
04-28-81	800391	Classification: prepared culture plates (799.00)
04-14-81	800393	Classification: ladies shirt (382.33)
04-29-81	800397	Classification: microcomputer organ (737.60)
04-14-81	800407	Classification: wallet components of man-made fibers (386.09, 774.55)

349-001 O - 81 - 4

Date of decision	File No.	Issue
04-15-81	800412	Classification: felt tip marking pens and color changer (760.15)
04-15-81	800431	Classification: imitation and synthetic gemstones (520.71, 741.35)
04-20-81	800432	Classification: child's canvas shoe with cupped sole (700.64, 700.67)
04-15-81	800434	Classification: woman's shirt (382.81)
04-15-81	800437	Classification: welded steel chain (652.18)
04-15-81	800440	Classification: water distillers (870.40)
04-15-81	800445	Classification: women's cotton woven blouse (382.33)
05-08-81	800446	Classification: swivel-type mining shovel (664.07, 692.35)
04-15-81	800450	Classification: musical toys (737.80)
04-29-81	800456	Classification: knock-down furniture (727.35, 727,40)
04-17-81	800458	Classification: windsurfers (696.05)
05-11-81	800465	Classification: toy plastic robot (682.95, 737.95)
04-21-81	800466	Classification: woven cotton denim jeans (380.00 382.00)
05-11-81	800467	Classification: four-wheel-drive tractor shovels (664.08, 870.40)
04-17-81	800469	Classification: remote controlled model vehicles and radio transmitters (685.60, 737.15)
04-17-81	800470	Classification: remote control model racing car (685.60, 737.15)
04-20-81	800473	Classification: wooden flowers (748.21)
04-27-81	800478	Classification: flour mix (183.01)
05-11-81	800479	Classification: camping tents (355.25)
04-29-81	800483	Classification: embossed aluminum sheets (618.25)
04-29-81	800485	Classification: water scooter (696.05)
04-29-81	800488	Classification: polypropylene ribbon (774.55)
04-21-81	800490	Classification: cold heading steel wire (606.88, 609.41)
04-21-81	800491	Classification: asbestos gloves (705.90)
05-11-81	800492	Classification: plastic sandals (700.51, 700.52, 700.53, 700.60)
04-29-81	800493	Classification: laminated plastic sheets (770.05)
04-29-81	800499	Classification: steel outlet (666.00)
05-11-81	800501	Classification: fireplace chimney damper (642.14, 657.09, 657.25)
05-08-81	800507	Classification: block mate toy (737.40)
04-29-81	800508	Classification: woven cotton denim pocket swatches (380.39)
05-11-81	800510	Classification: ladies knit pullover sweater (382.02, 382.54, 382.58)
05-11-81	800511	Classification: ladies knit man-made fiber sweater (382.04, 382.78)
05-08-81	800518	Classification: wood home packages (207.00)
05-11-81	800519	Classification: cap and visor caps (703.05, 382.78, 382.04)
05-05-81	800531	Classification: canvas uppered shoes (700.59, 700.67)

Date of decision	File No.	Issue
04-27-81	800538	Classification: cotton demin jeans (380.39)
05-05-81	800541	Classification: styrene oxide (403.68)
05-11-81	800546	Classification: sun visor with goggles (708.43, 708.45, 772.30, 774.55)
05-11-81	800547	Classification: phenoxy resin (408.88)
05-11-81	800556	Classification: peat moss preparation machines (662.20, 664.08, 664.00, 692.60, 678.20)
05-08-81	800558	Classification: quick release hook (678.50)
04-27-81	800561	Classification: sunflower seed paste or butter (183.05)
05-05-81	800564	Classification: molded industrial boot (700.51, 700.53)
04-29-81	800569	Classification: curbless dome roof skylight (770.10)
05-11-81	800575	Classification: tampon case (774.55)
05-12-81	800577	Classification: hot dog warmer (653.45, 684.20)
05-12-81	800578	Classification: trailer articulated trucks (692.02, 945.69)
05-12-81	800579	Classification: hand-operated stapling fastener and galvanized steel staples (646.20, 651.47)
05-12-81	800580	Classification: macadamia nuts (145.58)
05-08-81	800581	Classification: rotary cleaning machines (662.50, 678.50, 660.97)
05-08-81	800583	Classification: sun tanning apparatus (688.45)
05-08-81	800584	Classification: gas mask (709.45)
05-12-81	800585	Classification: cotton fabric (326.23)
05-08-81	800589	Classification: modular cleaning units and degreaser tanks (678.50)
05-12-81	800596	Classification: scale model die cast trucks (737.07)

Decisions of the United States Court of Customs and Patent Appeals

(C.A.D. 1263)

No. 80-36. United States *v.* Philipp Overseas, Inc.

1. Classification 609.82—Hot Rolled Alloy Steel Angles.

Judgment of United States Court of International Trade, 84 Cust. Ct. 200, C.D. 4859, 496 F. Supp. 273 (1980), holding that hot-rolled stainless steel angles which were annealed and pickled during manufacturing were properly classified under TSUS item 609.82 as hot-rolled alloy steel angles, "Not drilled, not punched, and not otherwise advanced," as claimed, and not under TSUS item 609.89 as "otherwise advanced," as classified by the Government, affirmed.

2. Id—Advancement of Article.

While no step in the creation of an article can at the same time be an advancement of that article, threshold question must always be what the "article" is.

3. Id.

This case is not one where it must be determined whether processes used by manufacturer are merely to make "commercially acceptable" article for TSUS Schedule 6, part 2, headnote 1, is neither incomplete nor ambiguous with regard to those processes.

4. Doctrine of "ejusdem generis."

Application of the doctrine of *ejusdem generis* precludes classification of imported stainless steel angles as "Drilled, puched, or otherwise advanced," for chemical processes of annealing and pickling are not *ejusdem generis* with mechanical processes of drilling and punching.

THE UNITED STATES, APPELLANT *v.* PHILIPP OVERSEAS, INC., APPELLEE

No. 80-36

United States Court of Customs and Patent Appeals, June 11, 1981

Appeal From United States Customs Court, C.A.D. No. 1263.

[Affirmed]

Thomas S. Martin, Acting Asst. Atty. General, *David M. Cohen*, Director, *Joseph I. Liebman*, Atty. in charge, *John J. Mahon*, counsel for appellant.
E. Thomas Honey, John J. Galvin, attorneys for appellee.

[Oral argument on May 4, 1981 by *John J. Mahon* for appellant and *E. Thomas Honey* for appellee.]

Before MARKEY, *Chief Judge*, RICH, BALDWIN, MILLER, and NIES, *Associate Judges*.

RICH, Judge.

[1] This appeal is from the judgment of the United States Customs Court (now the United States Court of International Trade) in *Philipp Overseas, Inc.* v. *United States*, 84 Cust. Ct. 200, C.D. 4859, 496 F. Supp. 273 (1980), sustaining appellee's complaint and holding that hot rolled stainless steel angles, which were annealed and pickled during the manufacturing process, are properly classified under Item 609.82 of the Tariff Schedules of the United States (TSUS), as modified by T.D. 68-9, as hot rolled alloy steel angles, not drilled, not punched, and not otherwise advanced. The government had classified the imported angles under Item 609.86, TSUS, as modified by T.D. 68-9, contending that although the angles were not drilled or punched, they were "otherwise advanced" because they were annealed and pickled in the course of their production. We affirm.

BACKGROUND

The imported goods are stainless steel angles. They are formed by "hot rolling" a steel billet, cooling it, annealing it (reheat to 1,000° C and cool by quenching in water), straightening (to remove waves created by the rolling process), and "pickling" (dipping the angles into acid solution). The purpose of annealing is to create a uniform and predictable range of physical characteristics in the metal, including corrosion resistance, by uniformly redistributing its chromium content (which had previously been localized after hot rolling in the form of chromium carbide). The pickling step removes the crust or scale which is formed in annealing, insuring that the chromium now located over the entire surface of the metal can combine with oxygen, giving the metal a uniform layer of chromium oxide, which in turn makes it corrosion resistant.

The angles were assessed a duty at 8.5% ad valorum pursuant to classification under 609.86, TSUS, plus additional duties on their

chromium and molybdenum content under Items 607.01 and 607.02, respectively, pursuant to Schedule 6, Part 2, Subpart B, headnote 4. Appellee claimed the proper duty to be 0.1 cent/lb. plus 2% ad valorum under 609.82, TSUS. The additional duties on the chromium and molybdenum content were not contested.

STATUTORY PROVISIONS

TARIFF SCHEDULES OF THE UNITED STATES

SCHEDULE 6—METALS AND METAL PRODUCTS

* * * * * * *

PART 2.—METALS, THEIR ALLOYS, AND THEIR BASIC SHAPES AND FORMS

Part 2 headnotes:

1. This part covers precious metals and base metals (including such metals when they are chemically pure), their alloys, and their so-called basic shapes and forms, and, in addition, covers metal waste and scrap. *Unless the context requires otherwise*, the provisions of this part apply to the products described by whatever process made (i.e., whether rolled, forged, drawn, extruded, cast or sintered) and whether or not such products have been subjected to treatments to improve the properties or appearance of the metals or to protect them against rusting, corrosion or other deterioration. These treatments include *annealing*, tempering, case-hardening and similar heat-treatment or nitriding; descaling, *pickling*, scraping, scalping and other processes to remove oxidation scale and crust; * * *. [Emphasis ours.]

* * * * * * *

SUBPART B.—IRON OR STEEL

* * * * * * *

Subpart B headnotes:

* * * * * * *

3. *Forms and Conditions of Iron or Steel*

* * * * * * *

(j) *Angles, shapes, and sections*: Products which do not conform completely to the respective specifications set forth herein for blooms, billets, slabs, sheet bars, bars, wire rods, plates, sheets, strip, wire, rails, joint bars, or tie plates, and do not include any tubular products.

* * * * * * *

Angles, shapes, and sections, all the foregoing, of iron or steel, hot rolled, forged, extruded, or drawn, or cold formed or cold finished, whether or not

	drilled, punched, or otherwise advanced; sheet piling of iron or steel;	
	Angles, shapes, and sections;	
	Hot rolled; or, cold formed and weighing over 0.29 pound per linear foot:	
	Not drilled, not punched, and not otherwise advanced:	
	* * * * * * *	
[Claimed] 609.82	Alloy iron or steel.	0.1 cents per lb.+ 2% ad val. + additional duties (see headnote 4)
	Drilled, punched or otherwise advanced:	
	* * * * * * *	
[Classified] 609.86	Alloy iron or steel.	8.5% ad val. + additional duties (see headnote 4)

ISSUE

The issue is whether the annealing and pickling processes, which are expressly allowed by headnote 1, "unless the context requires otherwise," exclude the imported angles from classification under Item 609.82 by reason of the language "not otherwise advanced" in the superior heading.

OPINION BELOW

The Customs Court stated it to be

> * * * well settled that no step in the creation of an article is at the same time an "advancement" of the article. *United States* v. *Baron Tube Co. et al.*, 47 CCPA 69, 71, C.A.D. 730 (1960); *Commercial Shearing & Stamping Company* v. *United States, (Guadalupe Industrial Supply Company, Inc., Party-in-Interest)*, 65 Cust. Ct. 91, 105, C.D. 4060, 317 F. Supp. 750 (1970), *aff'd*, 59 CCPA 203, C.A.D. 1067, 464 F. 2d 1048 (1972). Moreover, "manipulations after rolling, incident to making the rolled shape merchantable and fit for shipment, do not constitute

'advance' within the congressional intent". *American Mannex Corp.* v. *United States*, 56 Cust. Ct. 31, 36, C.D. 2608 (1966).

Since the angles were intended to be corrosion resistant, and *commercially acceptable* angles could not be produced without annealing and pickling, the court agreed with appellee that the imported angles were not "otherwise advanced" within the meaning of the heading superior to Item 609.86. It further noted that the government's own witness indicated that "he had never encountered a single order for nonannealed and nonpickled stainless steel angles."

The court also applied the doctrine of *ejusdem generis*, "where particular words of description are followed by general terms, the latter refer only to things of a like class with those particularly described," to reach the same result. "Otherwise advanced" in the statute is preceded by the words "drilled" and punched." Stating that annealing and pickling are not *ejusdem generis* with drilling and punching, the court held that the presumption of correctness of classification had been overcome and that the proper classification was under Item 609.82 as alleged by appellee.

ARGUMENTS ON APPEAL

The government argues that Items 609.86 and 609.82 provide for angles of alloy iron or steel. They do not require the angles to be stainless steel, the interpretation it alleges was given by the court below. In support of this argument, the government notes that other headnotes demonstrate that "stainless steel" is only one of many grades of steel that fall under the broader term, "alloy iron or steel."* Thus, even if all stainless steels required annealing or pickling or both to be commercially acceptable, that would have no bearing on whether those processes are necessary for these imports to be "angles * * * of alloy iron or steel" under either Item 609.86 or 609.82.

The government further argues that, in any event, several witnesses have testified that many angles of "alloy iron or steel" are sold hot rolled as rolled without either annealing or pickling. Thus, it is stated, it is clear that annealing or pickling or both are not necessary to produce or sell angles of alloy iron or steel, and that "advanced" must be construed in terms of further processing beyond the minimum required to create the article, i.e., hot rolling, and not in terms of whether the process renders the article commercially acceptable. Appellant states that the court itself noted that annealing and pickling are "not incidental to the rolling" operation and

*Schedule 6, Part 2, Subpart B, headnotes 2(h)(ii) and 2(h)(iv).

that, despite this, it erroneously referred to non-annealed and non-pickled angles as "semifinished."

Finally, the government argues that application of the doctrine of *ejusdem generis* is unwarranted, its use being reserved for those cases where the legislative intent is in doubt or ambiguous. In proposing that the meaning of the language in the heading superior to 609.86 is clear, the government repeats much of its earlier argument.

Appellee agrees with the reasoning of the lower court. Among other things, it states that the government's argument that the angles should be considered "otherwise advanced" since annealing and pickling are unnecessary to produce certain types of steel angles ignores the fact that the specific types of alloy steel of which the angles were composed, stainless steel types 304 and 316, require annealing and pickling to create a commercially acceptable product. The processes in issue, it is argued, cannot be both steps in creation and advancement.

OPINION

[2] The lower court stated, as previously noted, that no step in the creation of an *article* can at the same time be an advancement of that *article*. The question to be resolved, therefore, is whether that "article" is an [angle] * * * of alloy iron or steel" hot rolled as rolled, as the government argues, or a stainless steel angle which conforms to the pickling and annealing requirements of stainless steel types 304 and 316, as appellee asserts.

Other than for the proposition of law for which it was cited by the lower court, the case of *United States* v. *Baron Tube Co.*, supra, is not particularly instructive. Baron Tube had imported steel tubes manufactured by (1) hot rolling steel strips to cylindrical shapes with their longitudinal edges abutting in an open seam, (2) closing that open seam with a weld, and (3) removing the rib resulting from the weld. The imports were classified under a section which laid a duty upon "lap-welded, butt-welded, seamed, or jointed iron or steel tubes, pipes, flues, and stays * * *." Baron Tube claimed, and the Customs Court agreed, that the proper duty was found in a section relating to certain structural shapes (not specifically referencing tubes) and "all other structural shapes of iron or steel" which are not advanced beyond "hammering, rolling, or casting." In reversing the decision of the Customs Court, this court stated that "the tubes here are not structural shapes until processing beyond 'rolling, hammering, or casting' has been completed." Thus, although the court noted that "No step required for the creation of a structural shape * * * can, at the same time be an advancement of a structural shape," it held that the tubes when rolled did not possess the physical properties required to qualify them

as structural shapes. This, however, does not help us determine what comprises an angle of "alloy iron or steel."

The lower court also stated, regarding "commercial acceptability," that, "manipulations after rolling, incident to making the rolled shape merchantable and fit for shipment, do not constitute 'advance' within the congressional intent'," citing *American Mannex Corp.* v. *United States*, supra, and *E. Dillingham, Inc.* v. *United States*, 61 Cust. Ct. 33, C.D. 3522 (1968). Those cases dealt with the removal of useless or dangerous excrescences from rolled steel oil well casings, *American Mannex*, and from axe head forgings, *E. Dillingham*. The reasoning behind those decisions was that the cutting or grinding of the excrescences were steps required in the creation of the articles involved—to make them merchantable and fit for shipment—and were thus a part of the rolling and forging process. *Commercial Shearing & Stamping Co.* v. *United States*, supra at 105, 317 F. Supp. at 760.

The next question we must address in deciding what "article" we are dealing with, therefore, is whether the steps of annealing and pickling are required to make the imported "angles * * * of alloy iron or steel" merchantable, it being clear that the steps are not required to make the angles "fit for shipment." **[3]** This case, however, does not present the type of situation found in *American Mannex* and *E. Dillingham*,—whether the excision of useless or dangerous excrescences constitutes "advancement"—for the headnote discussion of "basic shapes and forms" of metals and their alloys is neither incomplete nor ambiguous with regard to annealing and pickling, and, therefore, needs no modification through discussion of what is a "commercially acceptable" angle. Accordingly, we agree with the government that an angle of "alloy iron or steel" should be interpreted to mean just that, an angle of *any* alloy iron or steel, since headnote 1, supra, refers to alloy iron or steel products "whether *or not*" they have been otherwise improved by annealing, pickling and the like.

[4] We do, however, on the basis of *ejusdem generis*, conclude that it would be stretching the matter to hold that even though headnote 1 expressly allows annealing and pickling, "Drilled, punched, or otherwise advanced" in the heading superior to Item 609.86 modifies that allowance pursuant to the phrase in headnote 1, "Unless the context requires otherwise." Drilling and punching are not *ejusdem generis* with annealing and pickling, and we therefore hold that the context of the heading superior to Item 609.86 is not one which "requires otherwise." The decision of the lower court is *affirmed*.

AFFIRMED.

United States Court of International Trade

One Federal Plaza
New York, N.Y. 10007

Chief Judge

Edward D. Re

Judges

Paul P. Rao
Morgan Ford
Scovel Richardson
Frederick Landis
James L. Watson
Herbert N. Maletz
Bernard Newman
Nils A. Boe

Senior Judge

Samuel M. Rosenstein

Clerk

Joseph E. Lombardi

Decisions of the United States Court of International Trade

(Slip Op. 81-50)

NIPPON KOGAKU (USA), INC., PLAINTIFF *v.* THE UNITED STATES, DEFENDANT

Court No. 76-2-00521

OPHTHALMIC INSTRUMENTS

An instrument consisting of an observation system providing a magnified image of the object viewed and a slit-lamp illumination source, used by ophthalmologists and optometrists to assist in the examination as well as the diagnosis and treatment of abnormalities

or diseases of the eye, is properly classified as an ophthalmic instrument under item 709.05, TSUS, and not as a compound optical microscope under item 708.73, TSUS.

[Defendant's motion for summary judgment granted, plaintiff's cross-motion for summary judgment denied.]

(Decided June 4, 1981)

Serko & Simon (*Joel K. Simon* on the brief) for the plaintiff.

Thomas S. Martin, Acting Assistant Attorney General; *Joseph I. Liebman*, Attorney in Charge, International Trade Field Office, Commercial Litigation Branch (*Jerry P. Wiskin* on the brief), for the defendant.

BOE, *Judge:* The subject merchandise in the above-captioned action, described in the special customs invoice as a "ZOOM PHOTO SLIT-LAMP MICROSCOPE, BASIC UNIT," was imported from Japan and entered at New York in July 1972 and January 1975. Upon liquidation the subject merchandise was classified under item 709.05, TSUS, providing:

SCHEDULE 7, PART 2, SUBPART B

	Medical, dental, surgical and veterinary instruments and apparatus (including electro-medical apparatus and ophtahlmic instruments), and parts thereof:	
	Optical instruments and appliances, and parts thereof:	
	Mirrors and reflectors	
	Binocular loupes for eye examinations	
709.05	Other	25% ad val.

The plaintiff contests the liquidated classification, claiming that the imported merchandise is properly classifiable under item 708.73, providing:

SCHEDULE 7, PART 2, SUBPART A

	Compound optical microscopes; electron, proton, and similar microscopes and diffraction apparatus; all the foregoing whether or not provided with means for photographing or projecting the image; frames and mountings for the foregoing articles, and parts of such frames and mountings:	
	Compound optical microscopes:	
	Not provided with means for photographing or projecting the image:	
*	* * * * * *	
708.73	Valued over $50 each	22.5% ad val.

The subject merchandise is an optical instrument used by ophthalmologists and optometrists to assist in the examination and the diagnosis of abnormalities or diseases of the eye.

The principal components of the imported merchandise are (1) the "main unit," (2) a cross-slide table which contains the power supply and to which the main unit is attached by a swivel arm and (3) a chin rest assembly permitting the patient's head to be placed in the proper position for an eye examination. The "main unit" consists of two interconnected systems: (a) an observation system employing twin objective lenses which provide a magnified image of the object viewed and twin eyepieces which further magnify the image, and (b) a slit-lamp system which directs a beam of light into the eye thereby sectioning the eye and permitting a view of various portions thereof, such as—the cornea, vitreous humor and aqueous humor.

The thrust of plaintiff's argument is that in construction and operation, the subject merchandise is a compound optical microscope, properly classifiable under item 708.73, TSUS, and, consequently, specifically excluded from classification as an ophthalmic instrument under item 709.05, TSUS by virtue of headnote 1(ii) of Schedule 7, part 2, subpart B, providing:

Subpart B headnote:

1. This subpart does not cover—

* * * * * * *

(ii) spectacles, lorgnettes, goggles and similar articles; *microscopes* and diffraction apparatus (*see subpart A of this part*); [Emphasis supplied.]

For the reasons hereinafter stated, this court concludes that the subject merchandise is not a compound optical microscope within the meaning of the tariff schedules, and, therefore, not properly classifiable under item 708.73, TSUS, as claimed by plaintiff.

Tariff provisions are presumed to have been framed so as to classify articles according to the general usage and denomination of the trade of which they are a part. *Nylos Trading Co.* v. *United States*, 37 CCPA 71, C.A.D. 422 (1940). In determining the common and/or commercial meaning of tariff terms, the court may be aided by the evidence submitted as well as by independent examination of standard dictionaries and scientific authorities. Webster's Third New International Dictionary 1429 (1966) provides this definition of "microscopes":

> microscope . . . 1: an optical instrument consisting of a lens or combination of lenses for making enlarged images of minute objects;

A "compound microscope" is defined as follows:

> compound microscope: a microscope consisting of an objective and an eyepiece mounted in a drawtube and focused by means of screw arrangements [At 467.]

Supplementing these very general descriptions of the terms "microscope" and "compound microscope," competent evidence has been submitted that in commerical and trade usage, the term "compound optical microscope" does not include the subject merchandise.

The evidence submitted by affidavit and deposition establishes that the subject merchandise and instruments manufactured by other companies, similar in purpose, function and description, are marketed in the United States as ophthalmic instruments, whereas "compound microscopes" are marketed as "microscopes." It likewise appears without contradiction that the industry, as well as ophthalmologists and optometrists, principal users of the article, know and refer to it as a slit-lamp microscope or a slit-lamp, not as a "compound microscope." Vilardi Deposition of May 15, 1980 at 8–9; Bannon's Affidavit at ¶¶ 8–10, 12–14; Tackaberry's Affidavit at ¶¶ 11–12, 14–17.

In light of the commercial and trade designation of the subject merchandise as contrasted with the generalized dictionary definition of the term "compound microscope," the use of legislative history and extrinsic aids is deemed proper and warranted to ascertain the legislative intent embodied in the tariff schedule providing for "compound optical microscopes." *See United States* v. *Durst Mfg. Co.*, 46 CCPA 74, C.A.D. 700 (1959).

The predecessor statutory provisions to item 709.05, TSUS, and item 708.73, TSUS, were paragraphs 228(a) and 228(b) of the Tariff Act of 1930, respectively providing:[1]

> PAR. 228. (a). Spectrographs, spectrometers, spectroscopes, refractometers, saccharimeters, colorimeters, prism-binoculars, cathetometers, interferometers, haemacytometers, polarimeters, polariscopes, photometers, ophthalmoscopes, *slit lamps*, *corneal microscopes*, optical measuring or optical testing instruments, testing or recording instruments for ophthalmological purposes, . . .
>
> (b) Azimuth mirrors, parabolic or mangin mirrors for searchlight reflectors, mirrors for optical, dental, or surgical purposes, photographic or projection lenses, sextants, octants, opera or field glasses (not prism binoculars), telescopes, *microscopes*, all optical instruments, . . . not specially provided for, . . . [Emphasis supplied.]

From the brief reference contained in the affidavit of Mr. Bannon, accompanying defendant's motion for summary judgment, it ap-

[1] Tariff Classification Study (Volume 9), Explanatory and Background Materials: Schedule 7 at 100, 102.

pears that the slit-lamp microscope manufactured by Nikon, the subject merchandise in this action, is an improved version of the corneal microscope used in the early 1920's, in that it now has the slit light source permanently made a part of the instrument. Bannon's Affidavit at ¶11. The meager record as to the meaning of the terms "slit-lamps" and "corneal microscopes" as well as the lack of any explanatory definition contained in the Tariff Act of 1930 and its legislative history, has caused the court to initiate further investigation with respect thereto.

The multivolume work, Systems of Ophthalmology, is illuminating in providing a history of the slit-lamp and corneal microscope and their relationship to modern ophthalmic instruments:

> THE SLIT-LAMP
>
> The slit-lamp together with the corneal microscope forms a system of focal illumination of extreme accuracy and mobility which has done more to elucidate the finer changes occurring in ocular disease than any other method. With its evolution the name of Gullstrand will always be associated.
>
> * * * * * * *
>
> THE CORNEAL MICROSCOPE. A binocular loupe which is held by the observer, if it is to provide sufficient magnification, presents the insuperable disadvantage of unsteadiness: for this reason it was discarded by Gullstrand as soon as he had evolved a system of illumination sufficiently powerful and susceptible of control to make high magnifications practicable. A microscope had been introduced by Abbé in 1881 and was adapted by Siedentopf, wherein the light from a single objective was distributed between two oculars by prisms to obtain a stereoscopic effect (the bi-tubus microscope); . . . A better instrument was the corneal microscope originally devised by Czapski (1897–99) and developed by Zeiss . . . Originally it was used with the inadequate illumination provided by a diffusely radiating electric lamp fixed above it, but when combined with the slit-lamp of Gullstrand it formed an exceedingly useful observation system.
>
> The Czapski-Zeiss corneal microscope was binocular, and an erect image with a full stereoscopic effect was obtained by a system of Porro prisms with four reflections, which also allowed the eyepieces to be adapted to suit the interpupillary distance of the observer. The instrument was extremely mobile, allowing linear movements in the sagittal, frontal, and vertical directions, and rotations around the fronto-horizontal and vertical axes. On these principles all subsequent corneal microscopes have been based.
>
> THE SLIT-LAMP. In 1911 Allvar Gullstrand first demonstrated a model of the slit-lamp. It was composed essentially of a Nernst lamp, the luminous filament of which was focused upon a slit by a collecting system of lenses.
>
> * * * * * * *

> As time has gone on, many models of the slit-lamp have been evolved, but the principle of all of them is based on the original model of Gullstrand . . . A considerable advance was introduced in the Bausch and Lomb slit-lamp by Koeppe in 1923 which provided co-axial rotation of the illumination system and the microscope, an idea improved by Fincham (1924) who linked the two so that each remained in focus with the other . . . A second innovation was due to Comberg (1933) whereby (in the Zeiss instrument) the illumination was set vertically and the beam deflected horizontally into the eye by a prism in such a way that it could be made nearly co-axial with the microscope, both moving about a single common axis . . . Finally, in 1937, Goldmann (in a Haag-Streit model of the Gullstrand type of instrument with its horizontal optical system) added a joy-stick control for fine simultaneous adjustment of the lamp and the microscope. [Duke-Elder, Systems of Ophthalmology, Volume VII at 248–49, 252 (1962).]

From the foregoing it is clear that the corneal microscope and the slit-lamp illumination source were utilized together in making eye examinations from an early date and that the two devices were physically linked to each other by the year 1924. Though many innovations and improvements have been made since the slit-lamp illumination source and corneal microscope were first used together, the Nikon slit-lamp microscope in issue herein is apparently based on that original model.[2]

Insight into the legislative intent with respect to the effect to consolidate related medical instruments and appliances used for diagnostic and treatment purposes is provided in the Explanatory Notes contained in the Tariff Classification Study (Volume 9), Schedule 7, Part 2 at 144–45:

> SUBPART B.—MEDICAL AND SURGICAL INSTRUMENTS AND APPARATUS
>
> This subpart covers a wide variety of instruments and appliances used generally in professional practice for diagnosis, prevention, and treatment of diseases, the correction of deformities and defects, the repair of injuries, etc. These articles are presently dutiable at a number of different rates in a number of widely separated paragraphs in seven of the present tariff schedules. In assimilating the various provisions for these closely related instruments and appliances into this subpart, articles imported in significant quantities have been provided for wherever

---

[2] It is noteworthy that the use of both of the terms "slit lamp" and "corneal microscope" has survived until today. A recent volume of an optical instruments trade publication defined "ophthalmic instruments" as "[a] family of specialized instruments used by ophthalmologists and optometrists to study a patient's eyes and prescribe spectacles. It includes . . . the Slit lamp and Corneal Microscope to observe small regions of the cornea that may be opaque or may scatter light." The Optical Industry & Systems Purchasing Directory, Book 2 at D-86 (26th ed. 1980). The 1972 Standard Industrial Classification Manual lists both "Corneal microscopes" and "Slit lamps (ophthalmic goods)" under Industry No. 3841, "Surgical and Medical Instruments and Apparatus."

Interestingly, Topcon, a distributor of instruments similar to the subject merchandise, markets its slit lamp microscope as a "Slit Lamp Corneal Microscope."

possible at the existing rates of duty. However, in some instances the rates reflect, estimated weighted averages of the presently effective duties.

Items 709.01 through 709.05 cover optical instruments and appliances. Item 709.01 covers principally medical and surgical mirrors and reflectors, now dutiable under paragraph 228(b), whether or not such mirrors and reflectors are used for reflecting images or for reflecting light on objects. The current rate of duty is proposed. The binocular loupes provided for in item 709.03 are currently dutiable under paragraph 228(b) as microscopes. The proposed rate for such loupes is the current rate of duty applicable to most imports of these articles. Item 709.05 covers all other optical instruments and appliances. Included among such instruments would be ophthalmoscopes, orthoptic and sight testing apparatus, cases of trial lessen and spectacles, similar articles all of which are currently dutiable under paragraph 228(a). The existing rate of duty for such articles is reflected in item 709.05.

By specifically excluding "compound microscopes" pursuant to headnote 1(ii), *supra*, which under paragraph 228(b) of the Tariff Act of 1930 were classified as "microscopes," Congress has further evidenced its intent to provide that the provision for microscopes corresponds with the trade and commercial meaning therefor. As further noted in the Tariff Classification Study, *supra*, at 143, the following explanation is contained:

> With the elimination of the simple magnifiers and the like, the provision for microscopes corresponds closely with trade designations.

In the Summaries of Tariff Information, Volume 2, Part 2 at 112 (1948), the following comment is made with respect to the scope of the microscope provision in paragraph 228(b), Tariff Act of 1930:

> The microscopes considered herein are both the general-purpose instruments and the highly specialized research types used in industrial, scientific and educational laboratories.

The comment relating to paragraph 228(a) at page 117, states:

> This summary considers (1) instruments and apparatus for the examination, diagnosis, and measurement of the human eye;

The Summaries of Trade and Tariff Information, Schedule 7, Volume 2 at 39 (1970), provides this description of the types of microscopes classified under items 708.71–.76, .78, TSUS:

> The optical, electron and proton microscopes are of two types: general purpose (primarily optical), used by amateurs, teachers, etc.; and specialized research types, used by industrial, scientific, and educational laboratories for the study of minute particles of matter in such fields as botany, chemistry, medicine, metallurgy, and food production.

The 1970 Tariff Summaries provides this description of the articles classified under items 709.01–.27, TSUS, at page 59:

> The articles considered in this summary include a wide variety of instruments and appliances used in the professional practice of medicine and dentistry for the prevention, diagnosis, and treatment of diseases and injuries and the correction of physical deformities and defects of the human body.

A comparison of the 1948 Tariff Summaries, relating to the Tariff Act of 1930, and the 1970 Tariff Summaries, relating to the Tariff Schedules of the United States, reveals that the administrative practice has consistently been to classify only general-purpose instruments and highly specialized research-type instruments for industrial, scientific and educational laboratories as "microscopes," and to exclude from the scope of that term, those specialized diagnostic instruments such as the subject merchandise, which are utilized by medical practitioners to make physical examinations to detect diseases and defects of the body.[3]

The Tariff Classification Study, Submitting Report at 8 acknowledges:

> The *'Brussels Nomenclature'* and the *'Standard Industrial Classification Manual'* exerted the greatest influence on the arrangement of the proposed revised schedules. [Emphasis supplied.]

Thus, the Brussels Nomenclature is a useful and helpful source of legislative history when a nexus can be found between it and the tariff schedules by the use of identical or similar phraseology. *See United States* v. *Norman G. Jensen, Inc.*, 64 CCPA 51, 550 F. 2d 662 (1977). In the instant action, the relevent provisions in the tariff schedules and the Brussels Nomenclature (1955) are very similar with respect to the scheme of classification as well as phraseology. The following Brussels headings at page 178 have a close nexus to the superior heading to items 703.71–.82, TSUS:

> 90.11 Miscroscopes and diffraction apparatus, electron and proton.
>
> 90.12 Compound optical microscopes, whether or not provided with means for photographing or projecting the image.

The following Brussels heading at page 179 is almost identical to the superior heading to items 709.01–.27, TSUS:

> 90.17 Medical, dental, surgical and veterinary instruments and appliances (including electro-medical apparatus and ophthalmic instruments).

---

[3] Although the long standing administrative practice so established by the Tariff Summaries is not evidence of Congressional intent, it is entitled to be given weight by the court. *Hawaiian Motor Co.* v. *United States*, 67 CCPA —, C.A.D. 1241, 617 F. 2d 286 (1980); *The Englishtown Corp.* v. *United States*, 64 CCPA 84, 553 F. 2d 1258 (1977).

The Explanatory Notes to Brussels heading 90.12 at page 1035 delineate the scope of the "Compound optical microscopes" provision:

> The present heading covers microscopes as used by amateurs, teachers, etc., and those for industrial use or for research laboratories;

The Explanatory Notes to heading 90.17 at page 1049 provide:

> This heading covers a very wide range of instruments and appliances which, in the vast majority of cases, are used only in professional practice (e.g., by doctors, surgeons, dentists, veterinary surgeons, midwives, etc.), either to make a diagnosis, or to prevent or treat an illness, . . .
>
> The heading does not cover;
>
> * * * * * * *
>
> (ij) Microscopes, etc., of heading 90.11 or 90.12.

The Explanatory Notes continue at page 1051 stating that heading 90.17 does cover ophthalmic instruments used for diagnostic purposes. The Brussels Nomenclature, and the Explanatory Notes thereto which closely parallel the language used in the 1948 Summaries and 1970 Summaries thus well serve to evidence Congressional intent to limit the scope of the term "compound optical microscope," as used in the tariff schedules, to general-purpose microscopes and those designed for industrial use or research laboratories and to exclude from the term "compound optical microscope," those specialized instruments used by medical practitioners to examine parts of the body for the purpose of diagnosing diseases or abnormalities.

Further cogent evidence that Congress did not intend to classify the subject merchandise as a "compound optical microscope" under item 708.73, TSUS, but rather as an ophthalmic instrument properly classifiable under item 709.05, TSUS, is provided in the Standard Industrial Classification Manual (SICM) (1957). The SICM, indeed, is closely similar in classification order and phraseology to the relevant tariff schedule provisions and is therefore useful as a source of legislative history. The SICM provisions state in relevant part:

Group No.	Industry No.	
383	----------	Optical instruments and lenses
-------	3831	Optical instruments and lenses
----------		Establishments primarily engaged in the production of optical lenses and prisms, and in manufacturing optical instruments such as microscopes, telescopes, field and opera glasses; . . .

* * * * * * *

Group No.	Industry No.	
384	----------	Surgical, medical, and dental instruments and supplies
-------	3841	Surgical and medical instruments and apparatus
----------		Establishments primarily engaged in manufacturing medical, surgical, *ophthalmic*, and veterinary *instruments and apparatus*. [Emphasis supplied.]

The index to the SICM states at page 368 that "Microscopes, corneal" are classified under Industry No. 3841 and that "Microscopes, except corneal" are classified under Industry No. 3831. The index further provides at page 401 that "Slit lamps (ophthalmic goods)" are likewise classified under Industry No. 3841. Clearly, the subject merchandise in this action would have been classified under SICM Industry No. 3841, "Surgical and medical instruments and apparatus" and not as a "microscope" under Industry No. 3831.

From the evidence adduced, and the application of the relevent principles of law, the court must conclude that Congress did not intend that the subject merchandise be classified as a "compound optical microscope" under item 708.73, TSUS, but rather as an ophthalmic instrument under item 709.05, TSUS.

The classification of the subject merchandise as made upon liquidation, therefore, must be affirmed.

Let judgment be entered accordingly.

Decisions of the United States Court of International Trade

Abstracts

Abstracted Protest Decisions

DEPARTMENT OF THE TREASURY, *June 8, 1981.*

The following abstracts of decisions of the United States Court of International Trade at New York are published for the information and guidance of officers of the customs and others concerned. Although the decisions are not of sufficient general interest to print in full, the summary herein given will be of assistance to customs officials in easily locating cases and tracing important facts.

WILLIAM T. ARCHEY,
Acting Commissioner of Customs.

DECISION NUMBER	JUDGE & DATE OF DECISION	PLAINTIFF	COURT NO.	ASSESSED	HELD	BASIS	PORT OF ENTRY AND MERCHANDISE
				Par. or Item No. and Rate	Par. or Item No. and Rate		
P81/74	Rao, J. June 1, 1981	Rhone Poulenc Inc.	80-4-00693	Item 423.96 5%	Item 519.37 0.4¢ per lb.	Agreed statement of facts.	New York Artificial abrasives.

DECISION NUMBER	JUDGE & DATE OF DECISION	PLAINTIFF	COURT NO.	ASSESSED	HELD	BASIS	PORT OF ENTRY AND MERCHANDISE
				Par. or Item No. and Rate	Par. or Item No. and Rate		
P81/75	Rao, J. June 1, 1981	Verona Div. Baychem Corp.	79-2-00355	Item 409.00 7¢ per lb. plus 45%	Item 405.25 2.8¢ per lb. plus 18%; or 1.4¢ per lb. plus 9%	Agreed statement of facts.	New York White and black urethane pastes; plastics materials
P81/76	Newman, J. June 1, 1981	A. N. Deringer, Inc., a/c Uniroyal, Inc.	78-1-00180	Item 657.20 9.5%	Item 772.65 4%	Uniroyal, Inc., c/o A. N. Deringer, Inc. v. U.S. (Abs. P80/59)	Champlain-Rouses Point (Ogdensburg) Rubber hose, pipe or tubing in various lengths with attached fittings
P81/77	Newman, J. June 1, 1981	A. N. Deringer, Inc., a/c Uniroyal, Inc.	78-8-01538	Item 657. 20 9.5%	Item 772.65 4%	Uniroyal, Inc., c/o A. N. Deringer, Inc. v. U.S. (Abs. P80/59)	Champlain-Rouses Point (Ogdensburg) Hose, pipe or tubing in various lengths with attached fittings
P81/78	Newman, J. June 1, 1981	A. N. Deringer, Inc., a/c Uniroyal, Inc.	79-2-00222	Item 657.25 9.5% Item 657.40 9.5%	Item 772.65 4%	Uniroyal, Inc., c/o A. N. Deringer, Inc. v. U.S. (Abs. P80/59)	Champlain-Rouses Point (Ogdensburg) Rubber hose, pipe or tubing in various lengths with attached fittings
P81/79	Newman, J. June 1, 1981	Uniroyal, Inc.	79-8-01290	Item 657.25 9.5%	Item 772.65 4%	Uniroyal, Inc., c/o A. N. Deringer, Inc. v. U.S. (Abs. P80/59)	Champlain-Rouses Point (Ogdensburg) Rubber hose, pipe or tubing in various lengths with attached fittings
P81/80	Rao, J. June 2, 1981	K Mart Corporation	80-9-01494	Item 654.20 8.5%	Item A654.20 Free of duty pursuant to	Agreed statement of facts	Savannah Musical jewelry boxes produced within Taiwan

					General Headnote 3(c) of TSUS, authorized by Title V of Trade Act of 1974, and Ex. Order No. 11888 of 11/26/75		
P81/81	Rao, J. June 2, 1981	S. S. Kresge Co.	79-4-00664	Item 734.97 9%	Item A734.97 Free of duty pursuant to General Headnote 3(c) of TSUS, authorized by Title V of Trade Act of 1974, and Ex. Order No. 11888 of 11/26/75	Agreed statement of facts	New York Ski gloves produced within Taiwan
P81/82	Re, C.J. June 2, 1981	Importers Associates, Inc.	78-12-02302	Item 705.86 35%	Item A734.97 Free of duty under Generalized System of Preferences as provided for in Trade Act of 1974, as evidenced by GSP certificates of origin	Stonewall Trading Co. v. U.S. (C.D. 4023)	New York Vinyl ski mittens

DECISION NUMBER	JUDGE & DATE OF DECISION	PLAINTIFF	COURT NO.	ASSESSED	HELD	BASIS	PORT OF ENTRY AND MERCHANDISE
				Par. or Item No. and Rate	Par. or Item No. and Rate		
P81/83	Rao, J. June 2, 1981	Gambles Import Corporation	78-5-00881	Item 653.95 8.5%	Item A653.95 Free of duty under Generalized System of Preferences	Agreed statement of facts	Los Angeles Stainless steel cookware; product of beneficiary developing country
P81/84	Rao. J. June 2, 1981	Bob Wolf Associates, Inc.	77-4-00688	Item 700.35 8.5% Item 700.60 20%	Item 700.35 8.5% Dutiable on basis of export value; said value is f.o.b. Keelung, Taiwan invoice unit values, net, as set forth in agreed statement of facts	Agreed statement of facts	Los Angeles Men's and boy's leather footwear
P81/85	Rao, J. June 2, 1981	Zayre Corp.	80-5-00716	Item 727.55 10%	Item 727.55 Free of duty under GSP by virtue of Ex. Order No. 11888 of 11/24/75	Agreed statement of facts	Savannah Furniture; product of eligible beneficiary country

P81/86	Watson, J. June 2, 1981	Albuquerque Brokerage, Inc., a/c. Sunbell Corp.	79-12-01817, ect.	Item 740.38 27.5%	Item 520.39 2.5%	Evvan Importers, Inc. v. U.S. (C.D. 4660)	Albuquerque Turquoise cabs
P81/87	Watson, J. June 2, 1981	Mobay Chemical Corp., Chemagro Agricultural Division	77-4-00691	Item 409.00 22.5% + 3.5¢ per lb.	Item 432.00 .5%	F. W. Myers & Co., Inc. v. U.S. (C.D. 4676)	Kansas City (St. Louis) "Sencor 50%," "Sencor 50% Wettable Powder" etc.

Decisions of the United States Court of International Trade

Abstracts

Abstracted Reappraisement Decisions

DECISION NUMBER	JUDGE & DATE OF DECISION	PLAINTIFF	COURT NO.	BASIS OF VALUATION	HELD VALUE	BASIS	PORT OF ENTRY AND MERCHANDISE
R81/219	Re, C.J. June 1, 1981	Asea Inc.	76-2-00503	Export value	Invoiced unit prices, net packed, as set forth in entries and invoices	C.B.S. Imports Corp. v. U.S. (C.D. 4739)	New Orleans Electrical equipment and apparatus
R81/220	Re, C.J. June 1, 1981	Asea Inc.	76-6-01439	Export value	Equal to invoiced unit prices, net packed, as set forth in entries and invoices	C.B.S. Imports Corp. v. U.S. (C.D. 4739)	New Orleans Electrical equipment and apparatus
R81/221	Re, C.J. June 1, 1981	Asea Inc.	76-6-01439-S	Export value	Equal to invoiced unit prices, net packed, as set forth in entries and invoices	C.B.S. Imports Corp. v. U.S. (C.D. 4739)	Chicago Electrical equipment and apparatus
R81/222	Re, C.J. June 1, 1981	Asea Inc.	76-8-01858	Export value	Equal to invoiced unit prices, net packed, as set forth in entries and invoices	C.B.S. Imports Corp. v. U.S. (C.D. 4739)	New York Electrical equipment and apparatus

R81/223	Watson, J. June 1, 1981	Geigy Chemical Corporation	R65/18626	United States value	U.S. selling prices, less 1% cash discount as determined by customs officer at time of appraisement; less 24.2% representing profit and general expenses usually made in U.S. on sales of dyestuffs of same class or kind; less costs of transportation and insurance from place of shipment to place of delivery in amounts determined by customs officer at time of appraisement; divided by 1.40 or such other factor applied by customs officer, to allow for customs duties payable on imported dyestuffs	U.S. v. Geigy Chemical Corporation et al. (C.A.D. 1155)	New York Benzenoid dyestuffs

NUMBER	DATE OF DECISION	PLAINTIFF	NO.	VALUATION	HELD VALUE	BASIS	ENTRY AND MERCHANDISE
R81/224	Watson, J. June 1, 1981	Geigy Chemical Corporation	R65/18876	United States value	U.S. selling prices, less 1% cash discount as determined by customs officer at time of appraisement; less 24.2% representing profit and general expenses usually made in U.S. on sales of dyestuffs of same class or kind; less costs of transportation and insurance from place of shipment to place of delivery in amounts determined by customs officer at time of appraisement; divided by 1.40 or such other factor applied by customs officer, to allow for customs duties payable on imported dyestuffs	U.S. v. Geigy Chemical Corporation et al. (C.A.D. 1155)	New York Benzenoid dyestuffs

International Trade Commission Notices

Investigations by the United States International Trade Commission

DEPARTMENT OF THE TREASURY, JUNE 18, 1981

The appended notices relating to investigations by the United States International Trade Commission are published for the information of Customs Officers and others concerned.

WILLIAM T. ARCHEY,
Commissioner of Customs.

In the Matter of CERTAIN FOOD SLICERS AND COMPONENTS THEREOF	Investigation No. 337-TA-76

Notice of Termination of Taiwan Timing Trading Co. as Party Respondent

AGENCY: U.S. International Trade Commission.

ACTION: Termination of Taiwan Timing Trading Co. as a party respondent in the above-captioned investigation.

SUMMARY: Having determined that this matter is properly before the Commission and having reviewed the record in this investigation, the Commission on June 8, 1981, terminated Taiwan Timing Trading Co. as a party respondent in Investigation No. 337-TA-76.

SUPPLEMENTARY INFORMATION: This investigation, under section 337 of the Tariff Act of 1930 (19 U.S.C. §1337) concerns alleged infringement of U.S. Letters Patent 3,766,817 by respondents E. Mishan & Sons, Albert E. Price, Inc., Crest Industries Corp., and Taiwan Timing Trading Co. The Commission instituted the investigation on December 4, 1979, and published notice thereof in the Federal Register of December 21, 1979 (44 F.R. 75733).

On December 22, 1980, the Commission denied a joint motion (Motion No. 76-12) for summary determination, on the grounds that genuine issues of material fact remained with respect to both Taiwan Timing and Mishan. Price and Crest were subsequently terminated as parties respondent to the investigation on the basis

of a settlement agreement and a licensing agreement, respectively (46 F.R. 16159, 46 F.R. 18632).

On February 23, 1981, complainant Prodyne moved to dismiss Taiwan Timing as a party respondent (Motion No. 76-15). On March 26, 1981, the presiding officer recommended that the Commission grant the motion (Second Recommended Determination).

The Commission published notice in the Federal Register seeking comments from the public regarding the recommended determination (46 F.R. 25375) and in addition requested comments from certain Government agencies pursuant to 19 CFR § 210.14(a)(2). No comments adverse to termination were received.

Any party wishing to petition for reconsideration of the Commission's action must do so within fourteen (14) days of service of the Commission Action and Order. Such petitions must be in accord with Commission Rule 210.56 (19 CFR § 210.56).

Copies of the Commission Action and Order in this matter and any other public documents in this investigation are available to the public during official working hours (8:45 a.m. to 5:15 p.m.) in the Office of the Secretary, U.S. International Trade Commission, 701 E Street NW., Washington, D.C. 20436, telephone 202-523-0161.

FOR FURTHER INFORMATION CONTACT: Warren H. Maruyama, Esq., Office of the General Counsel, U.S. International Trade Commission, 701 E Street NW., Washington, D.C. 20436, telephone 202-523-0143.

By order of the Commission.

Issued: June 10, 1981.

KENNETH R. MASON,
Secretary.

Investigation No. 104-TAA-3

CERTAIN SPIRITS FROM IRELAND

AGENCY: United States International Trade Commission.

ACTION: Institution of a countervailing duty investigation.

SUMMARY: On May 25, 1914 in T.D. 34466 the Department of the Treasury (Treasury) imposed countervailing duties, under section 4 of the Tariff Act of 1913, on certain classes of spirits imported from the United Kingdom of Great Britain and Ireland. On June 20, 1935, in T.D. 47753, Treasury stated that countervailing duties continued to be applicable to spirits from Ireland, because the export bounties set forth in T.D. 34466 had been paid

continuously since the date of the notice notwithstanding the establishment of the Irish Free State. Accordingly imports of spirits from Ireland, currently provided for under items 168.96, 168.98, 169.19, 169.20, 169.46 and 169.47 of the Tariff Schedules of the United States have been subject to countervailing duties.

On January 1, 1980, the provisions of the Trade Agreements Act of 1979 became effective, and on January 2, 1980, the authority for administering the countervailing duty statute was transferred from Treasury to the Department of Commerce (Commerce). On May 13, 1980, Commerce published a notice in the Federal Register (44 F.R. 31455) of intent to conduct an annual administrative review of all outstanding countervailing duty orders.

The U.S. International Trade Commission received a request for this investigation of March 28, 1980, from the Delegation of the Commission of European Communities.

As required by section 751(a)(1) of the Tariff Act of 1930, Commerce has conducted its first annual administrative review of the countervailing duty order on spirits from Ireland. As a result, Commerce, in the Federal Register of April 20, 1981 (46 F.R. 22632), preliminarily determined that the net subsidy conferred is 0.004 Irish pounds per liter of alcohol in plain spirits and 0.008 Irish pounds per liter of alcohol in compounded spirits. On the basis of that determination, the United States International Trade Commission, pursuant to section 104(b)(2) of the Trade Agreements Act, is instituting an investigation with respect to certain spirits from Ireland. Commerce reported that it would issue a final determination in this case after analysis of issues received in written comments or at a hearing. However, no hearing was requested and no written comments had been received by the deadline for their submission to Commerce, May 20, 1981. Commerce's final determination as to the most current level of subsidies will be made as soon as possible.

EFFECTIVE DATE: June 4, 1981.

FOR FURTHER INFORMATION CONTACT: John MacHatton, Supervisory Investigator, U.S. International Trade Commission, Washington, D.C. 20436 (202-523-0439).

SUPPLEMENTAL INFORMATION: The United States International Trade Commission is instituting this countervailing duty investigation to determine whether an industry in the United State would be materially injured, would be threatened with material injury, or the establishment of an industry in the United States would be materially retarded, by reason of imports of spirits from Ireland provided for under items 168.96, 168.98, 169.19, 169.20,

169.46 and 169.47 of the Tariff Schedules of the United States covered by the countervailing duty if the order were to be revoked.

Public Hearing.—Any person with an interest in this investigation may request in writing that the Commission hold a public hearing in connection with this investigation. Any such request must be received by the Commission within 14 days of the date of publication of this notice of investigation in the Federal Register. Such requests should be filed with the Office of the Secretary, U.S. International Trade Commission Building, 701 E Street, NW., Washington, D.C. 20436.

Questionnaires.—No questionnaires soliciting information from U.S. producers importers, or purchasers of the articles under investigation will be prepared or mailed unless a person with an interest in this investigation requests that the Commission prepare and mail such questionnaires. Any such request must be received by the Commission within 14 days of the date of publication of the notice in the Federal Register. Such requests should be filed with the Office of the Secretary, U.S. International Trade Commission Building, 701 E Street NW., Washington, D.C. 20436.

Written submission.—Any person may submit to the Commission on or before June 26, 1981, written statements of information pertinent to the subject matter of the investigation. A signed original and nineteen true copies of such statements must be submitted in accordance with section 201.8 of the Commission's Rules of Practice and Procedure, 19 CFR section 201.8 (1980).

Any business information which a submitter desires the Commission to treat as confidential shall be submitted separately and each sheet must be clearly marked at the top "Confidential business data." Confidential submissions must conform with the requirements of section 201.6 of the Rules of Practice and Procedure, 19 CFR 201.6. All written submissions, except confidential business data, will be available for public inspection.

For further information concerning the conduct of the investigation, hearing procedures, and rules of general application, consult the Commission's Rules of Practice and Procedure, part 207, subparts A and C (19 CFR 207), and part 201, subparts A through E (19 CFR 201).

This notice is published pursuant to section 207.20 of the Commission's Rules of Practice and Procedure (19 CFR 207.20, 44 F.R. 76458).

By order of the Commission.

Issued: June 5, 1981.

KENNETH R. MASON,
Secretary.

In the Matter of CERTAIN STEEL ROD TREATING APPARATUS AND COMPONENTS THEREOF	Investigation No. 337–TA–97

Notice of Grant of Leave To Review Order No. 13 and of Affirmance of Order No. 13.

AGENCY: U.S. International Trade Commission.

ACTION: Grant of Application for review of Order No. 13 and affirmance of Order No. 13.

SUMMARY: Notice is hereby given that on the basis of an Application for review of Order No. 13 filed by parties respondent Korf Industrie und Handel GmbH & Co., KG, and Korf Engineering GmbH, (Motion No. 97–40), the Commission has granted the Application for review and affirmed the presiding officer's denial of Motions No. 97–28 and 97–30 (Order No. 13).

AUTHORITY: The authority for the Commission's action is contained in section 337 of the Tariff Act of 1930 (19 U.S.C. §1337) and in section 210.60(b) (19 CFR § 210.60(b)) of the Commission's *Rules of Practice and Procedure.*

SUPPLEMENTARY INFORMATION: Upon receipt of a complaint filed by Morgan Construction Co., the Commission instituted investigation No. 337–TA–97 on January 23, 1981, to determine whether there is a violation of section 337 of the Tariff Act of 1930 by reason of the importation into and sale in the United States of certain steel rod treating apparatus and components thereof. Complainant Morgan alleges that the accused steel treating apparatus infringes claims 1–7 of U.S. Letters Patent 3,390,871. Notice of the Commission's investigation was published in the Federal Register on January 28, 1981 (46 F.R. 9263).

Respondents Korf Industrie und Handel GmbH & Co., KG and Korf Engineering GmbH, moved on April 30, 1981 to be dismissed as parties respondent to this investigation for improper service of process and lack of *in personam* jurisdiction (Motions Nos. 97–28, 97–30). The presiding officer denied the motions (Order No. 13), but granted respondents leave to file an interlocutory appeal with the Commission.

FOR FURTHER INFORMATION CONTACT: Warren H. Maruyama, Esq., Office of the General Counsel, U.S. International Trade Commission; telephone 202–523–0143.

By order of the Commission.

Issued: June 8, 1981.

KENNETH R. MASON,
Secretary.

In the Matter of CERTAIN CARD DATA IMPRINTERS AND COMPONENTS THEREOF	Investigation No. 337-TA-104

Notice of Investigation

AGENCY: U.S. International Trade Commission.

ACTION: Institution of investigation pursuant to 19 U.S.C. 1337.

SUMMARY: Notice is hereby given that a complaint was filed with the U.S. International Trade Commission on May 7, 1981, under section 337 of the Tariff Act of 1930 (19 U.S.C. 1337), on behalf of AM International, Inc., 1900 Avenue of the Stars, Los Angeles, Calif. 90067 and Bartizan Corp, 24 Ashburton Avenue, Yonkers, N.Y. 10701. The complaint alleges unfair methods of competition and unfair acts in the importation of certain card data imprinters into the United States, or in their sale, by reason of alleged direct or induced infringement of (1) claim 7 of U.S. Letters Patent 3,272,120 and (2) claim 12 of U.S. Letters Patent 3,340,800. The complaint further alleges that the effect or tendency of the unfair methods of competition and unfair acts is to destroy or substantially injure an industry, efficiently and economically operated, in the United States.

The complainant requests the Commission to institute an investigation; during the investigation, to issue a temporary exclusion order prohibiting importation of the articles in question into the United States, except under bond; and, after a full investigation, to issue an order excluding said articles from entry into the United States for the life of each patent in issue.

AUTHORITY: The authority for institution of this investigation is contained in section 337 of the Tariff Act of 1930 and in section 210.12 of the Commission's Rules of Practice and Procedure.

SCOPE OF INVESTIGATION: Having considered the complaint, the U.S. International Trade Commission, on June 4, 1981, ordered that—

(1) Pursuant to subsection (b) of section 337 of the Tariff Act of 1930, an investigation be instituted to determine whether there is reason to believe that there is a violation or whether there is a violation of subsection (a) of section 337 in the unlawful importation of certain card data imprinters and components thereof into the United States, or in their sale, by reason of alleged direct or induced infringement of (1) claim 7 of U.S. Letters Patent 3,272,120 and (2) claim 12 of U.S. Letters Patent 3,340,800, the effect or tendency of which is to destroy or sub-

stantially injure an industry, efficiently and economically operated, in the United States;

(2) For the purpose of this investigation so instituted, the following are hereby named as parties upon which this notice of investigation shall be served:

(a) The complainants are—

AM International, Inc.,
1900 Avenue of the Stars,
Los Angeles, Calif. 90067

Bartizan Corporation,
24 Ashburton Avenue,
Yonkers, N.Y. 10701

(b) The respondents are the following companies, alleged to be in violation of section 337, and are the parties upon which the complaint is to be served:

National Business Systems, Inc.,
3206 Orlando Drive,
Mississauga, Ontario L4V 1R5,
Canada

National Business Systems, Inc.,
525 Executive Boulevard,
Elmsford, N.Y. 10523

(c) Ralph Elsas-Patrick, Unfair Import Investigations Division, U.S. International Trade Commission, 701 E Street NW., Washington, D.C. 20436, shall be the Commission Investigative Attorney, a party to this investigation; and

(3) For the investigation so instituted, Donald K. Duvall, Chief Administrative Law Judge, U.S. International Trade Commission, 701 E Street NW., Washington, D.C. 20436, shall designate the presiding officer.

The phrase "and components thereof" has been added to paragraph (1) above on the basis of informal investigatory activities by the Commission which revealed that said card data imprinters can be imported in component parts as well as entirely assembled units.

Responses must be submitted by the named respondents in accordance with section 210.21 of the Commission's Rules of Practice and Procedure (19 CFR 210.21). Pursuant to sections 201.16(d) and 210.21(b) of the rules, such responses will be considered by the Commission if received not later than 20 days after the date of service of the complaint. Extensions of time for submitting a response will not be granted unless good and sufficient cause therefor is shown.

Failure of a respondent to file a timely response to each allegation in the complaint and in this notice may be deemed to constitute a waiver of the right to appear and contest the allegations of the complaint and this notice, and to authorize the presiding officer and the Commission, without further notice to the respondent, to find the facts to be as alleged in the complaint and this notice and to enter both a recommended determination and a final determination containing such findings.

The complaint, except for any confidential information contained therein is available for inspection during official working hours (8.45 a.m. to 5:15 p.m.) in the Office of the Secretary, U.S. International Trade Commission, 701 E Street NW., Washington, D.C. 20436, telephone 202-523-0161.

FOR FURTHER INFORMATION CONTACT: Ralph Elsas-Patrick, Unfair Import Investigations Division, U.S. International Trade Commission, telephone 202-523-0440.

By order of the Commission.

Issued: June 8, 1981.

KENNETH R. MASON,
Secretary.

731-TA-43 (Preliminary)

FRESH CUT ROSES FROM COLOMBIA

Notice of Institution of a Preliminary Antidumping Investigation and Scheduling of Conference

AGENCY: United States International Trade Commission.

ACTION: Institution of a preliminary antidumping investigation.

SUMMARY: The U.S. International Trade Commission hereby gives notice of the institution of a preliminary antidumping investigation to determine whether there is a reasonable indication that an industry in the United States is materially injured, or is threatened with material injury, or the establishment of an industry is materially retarded by reason of imports of fresh cut roses from Colombia, provided for in item 192.18 of the Tariff Schedules of the United States, allegedly sold at less than fair value.

EFFECTIVE DATE: June 4, 1981.

FOR FURTHER INFORMATION CONTACT: John MacHatton, Supervisory Investigator, telephone (202-523-0439), U.S. International Trade Commission, Room 342, 701 E Street N.W., Washington, D.C. 20436.

SUPPLEMENTARY INFORMATION:

Background. On June 4, 1981, the Commission received a petition on behalf of Roses Incorporated, a trade association. Accordingly, on June 8, 1981, the Commission, pursuant to section 733(a) of the Tariff Act of 1930, 19 U.S.C. 1673b(a) (Supp. III 1979), instituted preliminary antidumping investigation No. 731-TA-43 (Preliminary).

Authority. Section 733(a) of the Tariff Act of 1930 requires the Commission to make a determination of whether there is a reasonable indication that an industry in the United States is materially injured, or is threatened with material injury, or the establishment of an industry in the United States is materially retarded, by reason of imports allegedly sold in the United States at less than fair value. Such a determination must be made within 45 days after the date a petition is received. This investigation will be subject to the provisions of the Commission's Rules of Practice and Procedure and, particularly, to part 19 CFR 207.

Written submissions. Any person may submit to the Commission on or before July 6, 1981, a written statement of information pertinent to the subject matter of this investigation. A signed original and nineteen copies of such statements must be submitted.

Any business information which a submitter desires the Commission to treat as confidential shall be submitted separately, and each sheet must be clearly marked at the top "Confidential Business Data." Confidential submissions must conform with requirements of section 201.6 of the Commission's Rules and Practice of Procedures, 19 CFR 201.6. All written submissions, except for confidential business data, will be available for public inspection.

Conference. The Director of Operations of the Commission has scheduled a conference in connection with this investigation for 10 a.m., e.d.t., on June 30, 1981, at the U.S. International Trade Commission Building, 701 E Street NW., Washington, D.C. Persons wishing to participate in the conference should contact the supervisory investigator for the investigation, Mr. John MacHatton (202-523-0439) by the close of business (5:15 p.m., e.d.t.) June 26, 1981. It is anticipated that persons in support of the miposition of antidumping duties and persons opposed to such duties will each be collectively allocated 1 hour within which to make an oral presentation at the conference. Further details concerning the conduct of the conference will be provided by the supervisory investigator.

Inspection of petition. The petition filed in this case is available for public inspection at the Office of the Secretary, U.S. International Trade Commission.

Issued: June 9, 1981.

KENNETH R. MASON,
Secretary.

Index

U.S. Customs Service

Treasury decisions:	T.D. No.
Carrier Bond	81-169
Customs Regulations amended, Part 103, Availability of Information	81-168
Customs Regulation amended, section 101.3, Port of Entry, Austin, Texas	81-170
Instruments of International Traffic Bonds	81-167
Decisions of the United States Court of Customs and Patent Appeals:	C.A.D. No.
United States v. *Philipp Overseas, Inc.*	1263

DEPARTMENT OF THE TREASURY
U.S. CUSTOMS SERVICE
WASHINGTON, D.C. 20229

OFFICIAL BUSINESS
PENALTY FOR PRIVATE USE, $300

POSTAGE AND FEES PAID
DEPARTMENT OF THE TREASURY (CUSTOMS)
(TREAS. 552)

U.S. GOVERNMENT PRINTING OFFICE : 1981 O - 349-001

15/27

Customs Bulletin

Regulations, Rulings, Decisions, and Notices concerning Customs and related matters

and Decisions

of the United States Court of Customs and Patent Appeals and the United States Court of International Trade

Vol. 15 JULY 8, 1981 No. 27

NEWARK PUBLIC LIBRARY

AUG - 4 1981

U. S. GOVT. PUBS.
DEPOSITORY 376

This issue contains

T.D. 81-171 through 81-177
C.A.D. 1264 and 1265
Slip. Op. 81-51 and 81-52
Protest Abstracts P81/88 and P81/89
Reap. Abstracts R81/225 through R81/233
International Trade Commission Notice

THE DEPARTMENT OF THE TREASURY
U.S. Customs Service

T 1.11/3:

NOTICE

The abstracts, rulings, and notices which are issued weekly by the U.S. Customs Service are subject to correction for typographical or other printing errors. Users may notify the U.S. Customs Service, Logistics Management Division, Washington, D.C. 20229, of any such errors in order that corrections may be made before the bound volumes are published.

For sale by the Superintendent of Documents, U.S. Government Printing Office, Washington, D.C. 20402. Price: $2.25 (single copy domestic); $2.85 (single copy foreign). Subscription price: $85.00 a year domestic; $106.25 a year foreign.

U.S. Customs Service

Treasury Decisions

(T.D. 81-171)

Bonds

Approval and discontinuance of consolidated aircraft bonds (air carrier blanket bonds), Customs Form 7605

The following consolidated aircraft bonds have been approved or discontinued as shown below. The symbol "D" indicates that the bond previously outstanding has been discontinued on the month, day, and year represented by the figures which follow. "PB" refers to a previous bond, dated as represented by the figures in parentheses immediately following, which has been discontinued. If the previous bond was in the name of a different company or if the surety was different, the information is shown in a footnote at the end of the list.

Dated: June 18, 1981

Name of principal and surety	Date term commences	Date of approval	Filed with district director/area director/amount
Aeronaves de Mexico, S.A., 500 Fifth Ave., New York, NY; Boston Old Colony Ins. Co. D 6/30/79	May 7, 1974	June 26, 1974	Jamaica, NY $100,000
Aeronaves de Mexico, S.A., 8390 N.W. 53rd St., Miami, Fla.; National Union Fire Ins. Co.	Sept. 29, 1980	Jan. 8, 1981	Miami, FL $100,000

The foregoing principal has not been designated as a carrier of bonded merchandise.

BON-3-01

MARILYN G. MORRISON,
Director,
Carriers, Drawback and Bonds Division.

(T.D. 81-172)

Foreign Currencies—Variances From Quarterly Rate

The following rates of exchange are based upon rates certified to the Secretary of the Treasury by the Federal Reserve Bank of New York,

pursuant to Section 522(C), Tariff Act of 1930, as amended (31 USC 372(c)), and reflect variances of 5 per centum or more from the quarterly rate published in Treasury Decision 81–82 for the following countries. Therefore, as to entries covering merchandise exported on the dates listed, whenever it is necessary for Customs purposes to convert such currency into currency of the United States, conversion shall be at the following rates.

Austria schilling:	
June 1, 1981	$0.060901
June 2, 1981	.059701
June 3, 1981	.059916
June 4, 1981	.059102
June 5, 1981	.058411
Belgium franc:	
June 1, 1981	$0.026295
June 2, 1981	.025900
June 3, 1981	.025940
June 4, 1981	.025426
June 5, 1981	.025387
Brazil cruzeiro:	
June 1–5, 1981	$0.011597
People's Republic of China yuan:	
June 1, 1981	$0.572082
June 2–3, 1981	.569249
June 4, 1981	.565867
June 5, 1981	.561388
Denmark krone:	
June 1, 1981	$0.136295
June 2, 1981	.134771
June 3, 1981	.134120
June 4, 1981	.131579
June 5, 1981	.131320
Finland markka:	
June 1, 1981	$0.229226
June 2, 1981	.226603
June 3, 1981	.226655
June 4, 1981	.223964
June 5, 1981	.222321
France franc:	
June 1, 1981	$0.180034
June 2, 1981	.178174
June 3, 1981	.179211
June 4, 1981	.176149
June 5, 1981	.175131

Germany deutsche mark:	
June 1, 1981	$0.428266
June 2, 1981	.421763
June 3, 1981	.423639
June 4, 1981	.414250
June 5, 1981	.414766
Ireland pound:	
June 1, 1981	$1.5700
June 2, 1981	1.5510
June 3. 1981	1.5525
June 4, 1981	1.5245
June 5, 1981	1.5100
Italy lira:	
June 1, 1981	$0.000862
June 2, 1981	.000853
June 3, 1981	.000852
June 4, 1981	.000830
June 5, 1981	.000825
Japan yen:	
June 1, 1981	Quarterly
June 2, 1981	$0.004467
June 3, 1981	Quarterly
June 4, 1981	.004417
June 5, 1981	.004390
Netherlands guilder:	
June 1, 1981	$0.385356
June 2, 1981	.379867
June 3, 1981	.381025
June 4, 1981	.371195
June 5, 1981	.372439
New Zealand dollar:	
June 3, 1981	$0.8655
June 4, 1981	.8532
June 5, 1981	.8495
Norway krone:	
June 1, 1981	$0.174155
June 2, 1981	.172340
June 3, 1981	.171674
June 4, 1981	.169062
June 5, 1981	.167084

Portugal escudo:	
June 1, 1981	$0.016260
June 2, 1981	.016000
June 3, 1981	.016051
June 4, 1981	.015588
June 5, 1981	.015674
Republic of South Africa rand:	
June 1, 1981	$1.1795
June 2, 1981	1.1725
June 3, 1981	1.1655
June 4, 1981	1.1567
June 5, 1981	1.1440
Spain peseta:	
June 1, 1981	$0.010858
June 2, 1981	.010672
June 3, 1981	.010693
June 4, 1981	.010532
June 5, 1981	.010417
Sweden krone:	
June 1, 1981	$0.201898
June 2, 1981	.200300
June 3, 1981	.199362
June 4, 1981	.196502
June 5, 1981	.195580
Switzerland franc:	
June 1, 1981	$0.481696
June 2, 1981	.475737
June 3, 1981	.478469
June 4, 1981	.466418
June 5, 1981	.468384
United Kingdom pound:	
June 1, 1981	$2.0575
June 2, 1981	2.0360
June 3, 1981	2.0160
June 4, 1981	1.9400
June 5, 1981	1.9300

(LIQ-03-01 O:C:E)

Date:_____

KENNETH A. RICH,
Chief,
Customs Information Exchange.

(T.D. 81-173)

Tuna Fish—Tariff-Rate Quota

The tariff-rate quota for the calendar year 1981, on tuna classifiable under item 112.30, Tariff Schedules of the United States (TSUS).

AGENCY: U.S. Customs Service, Department of the Treasury.

ACTION: Announcement of the quota quantity for tuna for calendar year 1981.

SUMMARY: Each year the tariff-rate quota for tuna fish described in item 112.30 (TSUS), is based on the U.S. pack of canned tuna during the preceding calendar year.

EFFECTIVE DATES: The 1981 tariff-rate quota is applicable to tuna fish entered, or withdrawn from warehouse, for consumption during the period January 1 through December 31, 1981.

FOR FURTHER INFORMATION CONTACT: William D. Slyne, Chief, Special Operations Branch, Duty Assessment Division, Office of Commercial Operations, U.S. Customs Service, Washington, D.C. 20229 (202-566-8592).

It has now been determined that 104,355,000 pounds of tuna may be entered for consumption or withdrawn from warehouse for consumption during the calendar year 1981 at the rate of 6 per centum ad valorem under item 112.30, TSUS. Any such tuna which is entered, or withdrawn from warehouse, for consumption during the current calendar year in excess of this quota will be dutiable at the rate of 12.5 per centum ad valorem under item 112.34 of the tariff schedules.

(QUO-2-O:D:S:Q GH)

Dated: June 23, 1981.

WILLIAM T. ARCHEY,
Acting Commissioner of Customs.

(T.D. 81-174)

Foreign Currencies—Variances From Quarterly Rate

The following rates of exchange are based upon rates certified to the Secretary of the Treasury by the Federal Reserve Bank of New York, pursuant to Section 522(C), Tariff Act of 1930, as amended (31 USC 372(c)), and reflect variances of 5 per centum or more from the quarterly rate published in Treasury Decision 81-82 for the following countries. Therefore, as to entries covering merchandise exported on the dates listed, whenever it is necessary for Customs purposes to

convert such currency into currency of the United States, conversion shall be at the following rates.

Austria schilling:	
June 8, 1981	$0. 058445
June 9, 1981	. 059137
June 10, 1981	. 059382
June 11, 1981	. 058754
June 12, 1981	. 058893
Belgium franc:	
June 8, 1981	$0. 025523
June 9, 1981	. 025491
June 10, 1981	. 025800
June 11, 1981	. 025471
June 12, 1981	. 025556
Brazil cruzeiro:	
June 8–12, 1981	$0. 011346
People's Republic of China yuan:	
June 8–9, 1981	$0. 561388
June 10–11, 1981	. 563634
June 12, 1981	. 561388
Denmark krone:	
June 8, 1981	$0. 131666
June 9, 1981	. 132363
June 10, 1981	. 134138
June 11, 1981	. 132380
June 12, 1981	. 132670
Finland markka:	
June 8, 1981	$0. 221631
June 9, 1981	. 223164
June 10, 1981	. 224744
June 11, 1981	. 223264
June 12, 1981	. 222841
France franc:	
June 8, 1981	$0. 176367
June 9, 1981	. 175039
June 10, 1981	. 177715
June 11, 1981	. 175331
June 12, 1981	. 174825
Germany deutsche mark:	
June 8, 1981	$0. 415800
June 9, 1981	. 416146
June 10, 1981	. 421585
June 11, 1981	. 415887
June 12, 1981	. 417537

Ireland pound:	
June 8, 1981	$1.5170
June 9, 1981	1.5160
June 10, 1981	1.5385
June 11, 1981	1.5190
June 12, 1981	1.5230
Italy lira:	
June 8, 1981	$0.000830
June 9, 1981	.000835
June 10, 1981	.000845
June 11, 1981	.000835
June 12, 1981	.000837
Japan yen:	
June 8, 1981	$0.004388
June 9, 1981	.004384
June 10, 1981	.004436
June 11, 9181	.004423
June 12, 1981	.004461
Netherlands guilder:	
June 8, 1981	$0.372162
June 9, 1981	.374111
June 10, 1981	.378931
June 11, 1981	.373972
June 12, 1981	.375235
New Zealand dollar:	
June 8, 1981	$0.8516
June 9, 1981	.8526
June 10,1981	.8555
June 11, 1981	.8530
June 12, 1981	.8531
Norway Krone:	
June 8, 1981	$0.167504
June 9, 1981	.167997
June 10, 1981	.169722
June 11, 1981	.167856
June 12, 1981	.168138
Portugal escudo:	
June 8, 1981	$0.015723
June 9, 1981	.015848
June 10, 1981	.015835
June 11, 1981	.015798
June 12, 1981	.015785

Republic of South Africa rand:	
June 8, 1981	$1.1460
June 9, 1981	1.1478
June 10, 1981	1.1527
June 11, 1981	1.1493
June 12, 1981	1.1470
Spain peseta:	
June 8, 1981	$0.010444
June 9, 1981	.010479
June 10, 1981	.010530
June 11, 1981	.010454
June 12, 1981	.010471
Sweden krone:	
June 8, 1981	$0.196657
June 9, 1981	.196464
June 10, 1981	.198216
June 11, 1981	.195886
June 12, 1981	.196348
Switzerland franc:	
June 8, 1981	$0.472813
June 9, 1981	.473485
June 10, 1981	.478927
June 11, 1981	.472813
June 12, 1981	.477099
United Kingdom pound:	
June 8, 1981	$1.9400
June 9, 1981	1.9405
June 10, 1981	1.9705
June 11, 1981	1.9490
June 12, 1981	1.9570

(LIQ-03-01 O:C:E)

Dated: June 12, 1981.

KENNETH A. RICH,
Chief,
Customs Information Exchange.

(T.D. 81-175)

Cotton Textile Products—Restriction on Entry

Restriction on entry of cotton textile products manufactured or produced in Macau

There is published below a directive of May 1, 1981, received by the Commissioner of Customs from the Acting Chairman, Committee

for the Implementation of Textile Agreements, concerning restriction on entry of cotton textile products in categories 333/334/335 manufactured or produced in Macau. This directive amends, but does not cancel, that Committee's directive of December 8, 1980 (T.D. 81–128).

This directive was published in the Federal Register on May 8, 1981 (46 FR 25678), by the Committee.

(QUO–2–1)

Dated: June 23, 1981.

WILLIAM D. SLYNE
(For Richard R. Rosettie, Acting Director,
Duty Assessment Division).

U.S. DEPARTMENT OF COMMERCE,
INTERNATIONAL TRADE ADMINISTRATION,
Washington, D.C., *May 1, 1981.*

Committee for the Implementation of Textile Agreements

COMMISSIONER OF CUSTOMS,
Department of the Treasury, Washington, D.C.

DEAR MR. COMMISSIONER: On December 8, 1980, the Chairman, Committee for the Implementation of Textile Agreements, directed you to prohibit entry during the twelve-month period beginning on January 1, 1981 and extending through December 31, 1981 of cotton, wool and man-made fiber textile products, produced or manufactured in Macau, in excess of designated levels of restraint. The Chairman further advised you that the levels of restraint are subject to adjustment.[1]

Under the terms of the Arrangement Regarding International Trade in Textiles done at Geneva on December 20, 1973, as extended on December 15, 1977; pursuant to the Bilateral Cotton, Wool and Man-Made Fiber Textile Agreement of November 29 and December 18, 1979, as amended, between the Governments of the United States and Portugal; and in accordance with the provisions of Executive Order 11651 of March 3, 1972, as amended by Executive Order 11951 of January 6, 1977, you are directed to prohibit, effective on May 1, 1981 and for the twelve-month period beginning on January 1, 1981 and extending through December 31, 1981, entry into the

[1] The term "adjustment" refers to those provisions of the Bilateral Cotton, Wool and Man-Made Fiber Textile Agreement of November 29 and December 18, 1979, as amended, between the Governments of the United States and Portugal, which provide, in part, that: (1) within the aggregate and group limits; specific levels of restraint may be exceeded by designated percentages; (2) these levels may also be increased for carryover and carryforward up to 11 percent of the applicable category limits; and (3) administrative arrangements or adjustments may be made to resolve minor problems arising in the implementation of the agreement.

United States for consumption and withdrawal from warehouse for consumption of cotton textile products in Category 333/334/335, produced or manufactured in Macau, in excess of the following adjusted level of restaint:

Category	*Amended 12-mo level of restraint* [1]
333/334/335	99,767 dozen of which not more than 47,813 dozen shall be in Cat. 333/335

[1] The levels of restraint have not been adjusted to reflect any imports after December 31, 1980.

The actions taken with respect to the Government of Portugal and with respect to imports of cotton textile products from Macau have been determined by the Committee for the Implementation of Textile Agreements to involve foreign affairs functions of the United States. Therefore, these directions to the Commissioner of Customs, which are necessary for the implementation of such actions, fall within the foreign affairs exception to the rule-making provisions of 5 U.S.C. 553. This letter will be published in the Federal Register.

Sincerely,

EDWARD GOTTFRIED,
Acting Chairman, Committee for the Implementation of Textile Agreements.

(T.D. 81-176)

Cotton, Wool and Manmade Fiber Textile Products—Restriction on Entry

Restriction on entry of cotton, wool and manmade fiber textile products manufactured or produced in Macau

There is published below a directive of April 2, 1981, received by the Commissioner of Customs from the Chairman, Committee for the Implementation of Textile Agreements, concerning visa requirements on entry of cotton, wool and manmade fiber textile products in certain categories manufactured or produced in Macau. This directive amends, but does not cancel, that Committee's directive of August 6, 1973 (T.D. 73-241).

This directive was published in the Federal Register on April 7, 1981 (46 FR 20720), by the Committee.

(QUO-2-1)

Dated: June 23, 1981

WILLIAM D. SLYNE,
(For Richard R. Rosettie, Acting Director,
Duty Assessment Division).

U.S. DEPARTMENT OF COMMERCE,
INTERNATIONAL TRADE ADMINISTRATION,
Washington, D.C., April 2, 1981.

Committee for the Implementation of Textile Agreements

COMMISSIONER OF CUSTOMS,
Department of the Treasury,
Washington, D.C.

DEAR MR. COMMISSIONER: This directive further amends, but does not cancel, the directive of August 6, 1973 from the Chairman, Committee for the Implementation of Textile Agreements, that directed you to prohibit, under specified conditions, entry into the United States for consumption and withdrawal from warehouse for consumption of certain cotton, wool and man-made fiber textile products, produced or manufactured in Macau for which Macau had not issued an appropriate visa. One of the requirements is that each visa include the signature of a Macau official authorized to issue visas.

Effective on April 7, 1981, the directive of August 6, 1973, is further amended to authorize the officials of the Government of Macau named on the enclosed list to issue export visas for cotton, wool and man-made fiber textile products, produced or manufactured in Macau. The list includes all Macau officials currently authorized to issue export visas.

The actions taken with respect to the Government of Portugal and with respect to imports of cotton, wool and man-made fiber textile products from Macau have been determined by the Committee for the Implementation of Textile Agreements to involve foreign affairs functions of the United States. Therefore, these directions to the Commissioner of Customs, which are necessary for the implementation of such actions, fall within the foreign affairs exception to the rulemaking provisions of 5 U.S.C. 553. This letter will be published in the Federal Register.

Sincerely,

PAUL T. O'DAY,
Chairman, Committee for the
Implementation of Textile Agreements.

Enclosure.

Macau Officials Authorized To Issue Visas for Cotton, Wool, and Man-Made Fiber Textile Products Exported to the United States

Florinda de Rosa Silva Chan

Angelo Bemdito Galdino Dias

Jose Bernardino Marques Ferreira

349-002 O - 81 - 2

Francisco Xavier Jose de Mesquita

Jose Carlos Mesquita

Rui Manuel Barata Paiva

Joana Maria de Sousa Santos

Maria Manuela Aguiar Viana

(T.D. 81-177)

Cotton and Manmade Fiber Textile Products—Restriction on Entry

Restriction on entry of cotton and manmade fiber textile products manufactured or produced in India

There are published below directives of March 25, and April 28, 1981, received by the Commissioner of Customs from the Chairman, Committee for the Implementation of Textile Agreements, concerning restriction on entry of cotton and manmade fiber textile products in certain categories manufactured or produced in India. These directives amend, but do not cancel, that Committee's directive of December 16, 1980 (T.D. 81-132).

These directives were published in the Federal Register on March 31, 1981 (46 FR 19513), and May 1, 1981 (46 FR 24617), respectively, by the Committee.

QUO-2-1

Dated: June 23, 1981.

WILLIAM D. SLYNE
(For Richard R. Rosettie, Acting Director,
Duty Assessment Division).

U.S. DEPARTMENT OF COMMERCE,
INTERNATIONAL TRADE ADMINISTRATION,
Washington, D.C., March 25, 1981.

Committee for the Implementation of Textile Agreements

COMMISSIONER OF CUSTOMS,
Department of the Treasury,
Washington, D.C.

DEAR MR. COMMISSIONER: This directive amends, but does not cancel, the directive issued to you on December 16, 1980 by the Chairman of the Committee for the Implementation of Textile Agreements concerning imports into the United States of certain cotton, wool and man-made fiber textile products, produced or manufactured in India.

Effective on March 30, 1981, paragraph 1 of the directive of December 16, 1980 is amended to increase the level of restraint for cotton textile products in Category 342 to 84,270 dozen.[1]

The action taken with respect to the Government of India and with respect to imports of cotton textile products from India has been determined by the Committee for the Implementation of Textile Agreements to involve foreign affairs functions of the United States. Therefore, these directions to the Commissioner of Customs, which are necessary for the implementation of such actions, fall within the foreign affairs exception to the rule-making provisions of 5 U.S.C. 553. This letter will be published in the Federal Register.

Sincerely,

PAUL T. O'DAY,
Chairman, Committee for the
Implementation of Textile Agreements.

U.S. DEPARTMENT OF COMMERCE,
INTERNATIONAL TRADE ADMINISTRATION,
Washington, D.C., April 28, 1981.

Commitee for the Implementation of Textile Agreements

COMMISSIONER OF CUSTOMS,
Department of the Treasury,
Washington, D.C.

Dear Mr. COMMISSIONER: This directive amends, but does not cancel, the directive issued to you on December 16, 1980 by the Chairman of the Committee for the Implementation of Textile Agreements concerning imports into the United States of certain cotton, wool and man-made fiber textile products, produced or manufactured in India.

Effective on April 28, 1981, paragraph 1 of the directive of December 16, 1980 is further amended to increase the levels of restraint for cotton and man-made fiber textile products in Categories 335, 351, 359 and 641 to the following:

Category	*Adjusted 12-mo level of restraint* [1]
335	29,056 dozen
351	19,231 dozen
359	326,087 pounds
641	103,448 dozen

[1] The levels of restraint have not been adjusted to reflect any imports after December 31, 1980.

The actions taken with respect to the Government of India and with respect to imports of cotton and man-made fiber textile products

---

[1] The level of restraint has not been adjusted to reflect any imports after December 31, 1980.

from India have been determined by the Committee for the Implementation of Textile Agreements to involve foreign affairs functions of the United States. Therefore, these directions to the Commissioner of Customs, which are necessary for the implementation of such actions, fall within the foreign affairs exception to the rule-making provisions of 5 U.S.C. 553. This letter will be published in the Federal Register.

Sincerely,

PAUL T. O'DAY,
Chairman, Committee for the Implementation of Textile Agreements.

ERRATUM

In Customs Bulletin, Volume 15, No. 22, in T.D. 81-146, on page 2, Edwards Trucking Inc., change date of discontinuance to February 21, 1981.

Decisions of the United States Court of Customs and Patent Appeals

(C.A.D. No. 1264)

CARLINGSWITCH *v.* UNITED STATES, No. 80–41

1. GRANT OF SUMMARY JUDGMENT—LACK OF JURISDICTION.

Judgment of United States Court of International Trade, 85 Cust. Ct. —, C.D. 4873, 500 F. Supp. 223 (1980), granting the United States' motion for summary judgment on the ground that the court lacked jurisdiction and denying Carlingswitch's cross-motion for summary judgment, affirmed.

2. ID.—REFUSAL TO REFUND IS NOT "CHARGE OR EXACTION".

After appellant paid $91,992.35 to Customs as "additional tariff" and "withheld duties" and was subsequently charged $7,926,778 forfeiture value for undervaluation of imported merchandise, false freight figures, and failure to report true constructed value figures, the claim was remitted in its entirety because statute of limitations had run; summary judgment based upon want of jurisdiction upheld on ground that refusal to refund $91,992.35 under 19 U.S.C. 1520(a)(3) is not a "charge or exaction" as those words are used in 19 U.S.C. 1514(a)(3) which would give the court jurisdiction under 28 U.S.C. 1582(a)(3).

3. ID.

It is refusal to refund which appellant alleges to be "charge or exaction," not actual payments made to Customs (otherwise it would have been argued that money should have been refunded pursuant to 19 U.S.C. 1520(a)(2), which relates to "Fees, charges, and exactions"), and judgment of lower court is affirmed based upon its holding that a refusal to refund money is not a § 1514 "charge or exaction."

4. ID.

CCPA disagrees that money should have been refunded pursuant to 19 U.S.C. 1520(a)(3), which refers to monies paid "on account of a fine, penalty, or forfeiture," none of which had been charged against appellant at the time of the payments in question.

5. ID.—VOLUNTARY DISCLOSURE PRACTICE OF CUSTOMS SERVICE.

Because appellant argues that its payments were not "voluntary and without demand," as lower court stated, and thus were not

made pursuant to "voluntary disclosure" practice of Customs, its attempt to assert that lower court decision may "chill" participation in that program and defeat public policy behind it has no weight; while appellant may not now contest with Customs, as a defendant, the correctness of the imposition of $7,926,778 fine or the underlying undervaluation determination, decision is limited to holding that, based upon appellant's arguments, lower court does not have jurisdiction over the dispute.

CARLINGSWITCH, INC., APPELLANT *v.* UNITED STATES, APPELLEE

(No. 80–41)

United States Court of Customs and Patent Appeals, June 18, 1981, Appeal from United States Customs Court, C.A.D. No. 1264

[Affirmed]

Charles P. Deem, attorney for appellant.

Thomas S. Martin, Acting Assistant Attorney General, *David M. Cohen*, Director, *Joseph I. Liebman*, Attorney in charge, *Jerry P. Wiskin*, attorneys for appellee.

[Oral argument on April 6, 1981 by *Charles P. Deem* for appellant and *Jerry P. Wiskin* for appellee.]

Before MARKEY, *Chief Judge*, RICH, BALDWIN, MILLER, and NIES, *Associate Judges*.

RICH, *Judge*.

[1] This appeal is from the judgment of the United States Customs Court (now the United States Court of International Trade) in *Carlingswitch, Inc.* v. *United States*, 85 Cust. Ct. —, C.D. 4873, 500 F. Supp. 223 (1980), granting the United States' motion for summary judgment and denying Carlingswitch's cross-motion for summary judgment. We affirm.

This apparently being a case of first impression, we devote substantial discussion to its background and to elucidation of the arguments of both parties.

BACKGROUND

[2] Appellant was under investigation in 1974 for allegedly understating the actual costs of certain electrical articles assembled in Mexico from United States products and subsequently imported into the United States. On May 28, 1974, Carlingswitch, through its accountants, voluntarily and without demand paid $41,992.35 to the United States Customs Office in Brownsville, Texas, stating that the funds represented "additional tariff." On April 23, 1976, Carlingswitch, through its attorneys, paid the Customs Service an additional $50,000, designated as "withheld duties," stating;

> This tender is not to be interpreted as an admission that any particular additional duties are due, that fact not having yet been determined by us. Rather, the tender is made in the spirit

of demonstrating our client's intentions to cooperate fully with your office with respect to the fulfillment of its recognized obligation under the law to pay appropriate duty on its importations.

The trial court stated it to be "undisputed" that the payments were made pursuant to the Customs Service "voluntary disclosure" practice. That practice, now embodied in 19 CFR 171.1(a), is briefly, that a voluntary disclosure of violations of the customs laws, accompanied by a deposit of an amount equal to the total loss of revenue to the government will, in specified circumstances, result in mitigation of the penalty to an amount not exceeding the government's total loss of revenue.

Customs subsequently completed its investigation of appellant and on January 6, 1977, demanded $7,926,778 as forfeiture value on the basis of (1) the undervaluation of the merchandise; (2) false freight figures; and (3) the failure to report the true constructed, value figures. Customs notified appellant on June 15, 1979, however that the statute of limitations had run out and that the claim was remitted in its entirety. Appellant requested a refund on June 29, 1979, of the $91,992.35 it had paid. That request was denied by Customs which which stated that although the statute of limitations had run on the claimed money, the actual revenue loss to the government was $174,573.21, and it assumed that appellant's voluntary payments were made to cover part of that loss. Appellant filed a protest on October 22, 1979, against this refusal to refund the money, which protest was denied on December 11, 1979. This suit followed.

THE TRIAL COURT OPINION

Carlingswitch contended below that by virtue of 19 USC 1520(a)(3),[1] which relates to refunds, Customs' refusal to refund the monies paid amounted to a "charge or exaction" within the meaning of 19 USC 1514(a)(3).[2] It further argued that the trial court therefore

---

[1] 19 U.S.C. 1520(a)(3) provides in part:

(a) The Secretary of the Treasury is authorized to refund duties or other receipts in the following cases:

* * * * * * *

(3) Fines, penalties, and forfeitures—Whenever money has been deposited in the Treasury on account of a fine, penalty, or forfeiture which did not accrue, or which is finally determined to have accrued in an amount less than that so deposited, or which is mitigated to an amount less than that so deposited or is remitted.

[2] 19 U.S.C. 1514 reads in part:

(a) Except as provided in subsection (b) of this section, section 1501 of this title (relating to voluntary reliquidations), section 1516 of this title (relating to petitions by domestic interested parties as defined in section 1677(9) (C), (D), and (E) of this title), section 1520 of this title (relating to refunds and errors), and section 1521 of this title (relating to reliquidations on account of fraud), decisions of the appropriate customs officer, including the legality of all orders and findings entering into the same, as to—

(1) the appraised value of merchandise;

(2) the classification and rate and amount of duties chargeable;

(3) all charges or exactions of whatever character within the jurisdiction of the Secretary of the Treasury;

* * * * * * *

shall be final and conclusive upon all persons (including the United States and any officer thereof) unless a protest is filed in accordance with this section, or unless a civil action contesting the denial of a protest, in whole or in part, is commenced in the United States Court of International Trade in accordance with chapter 169 of Title 28 within the time prescribed by section 2636 of that title.

had jurisdiction over the dispute pursuant to 28 USC 1582,[3] and that its cross-motion for summary judgment should be granted. The government, of course, argued otherwise, and had previously moved for summary judgment in its favor.

The motion by the government was granted. In support of its decision that it lacked jurisdiction over the case, the trial court cited a number of dictionary definitions of the word "exaction," concluding that some element of demand or compulsion is necessary for a payment to have been "exacted." The court further noted that past cases have utilized the term only with regard "to actual assessments of specific sums of money." *Alberta Gas Chemicals, Inc.* v. *Blumenthal*, 82 Cust. Ct. 77, 81–2, C.D. 4792, 467 F. Supp. 1245, 1249–50 (1979). Accordingly, the court declined to extend the meaning of the word "exaction" to include a refusal to refund money voluntarily paid. The trial court noted, finally, that an appropriate district court, rather than it, had jurisdiction in this type of case (a "penalty case") pursuant to 19 USC 1592, citing *Sheldon & Co.* v. *United States*, 8 Cust. Ct. Appls. 215, 218, T.D. 37455 (1917); *M. M. Scher & Sons, Inc.* v. *United States*, 24 Cust. Ct. 243, C.D. 1241 (1950); and the Senate Finance Committee Report on H.R. 8149, the Customs Procedural Reform and Simplification Act of 1978 (S. Rep. No. 95–778, 95th Cong., 2d Sess. 17–21).

APPELLANT'S ARGUMENTS

Appellants states that the only issue before us "is whether protests will lie against an administrative decision under 19 U.S.C. 1520(a)(3)." In support of its case, appellant asserts that the Court of International Trade, rather than "an appropriate district court," has jurisdiction over the case because it is not a "penalty case" as that term is typically employed. The usual penalty case is one brought by the government in a district court pursuant to 19 USC 1604 and 28 USC 1355 to enforce a claim under 19 USC 1592 or some related statute, or a case arising under 19 USC 1608. In this case, the penalty has been mooted and there is no issue relating to the merits of the penalty claim.

Appellant contends that the cases cited by the trial court in support of its decision are inapposite. *M. M. Scher & Sons, Inc.* v. *United States*, supra, it argues, spoke of a "sum arrived at by the Secretary of the Treasury in mitigation of the penalty fixed by law under the

---

[3] 28 U.S.C. 1582, which delineates the jurisdiction of the Customs Court (now the Court of International Trade) provides in part:

(a) The Customs Court shall have exclusive jurisdiction of civil actions instituted by any person whose protest pursuant to the Tariff Act of 1930, as amended, has been denied, in whole or in part, by the appropriate customs officer, where the administrative decision, including the legality of all orders and findings entering into the same, involves: (1) the appraised value of merchandise; (2) the classification and rate and amount of duties chargeable; (3) all *charges or exactions* of whatever character within the jurisdiction of the Secretary of the Treasury; * * * [Emphasis ours.]

provisions of section 592 of the Tariff Act of 1930," clearly not the case here, and jurisdiction was proscribed in *Sheldon & Co.* v. *United States*, supra, because:

> If the moneys received by the collector were paid to him as a representative of the United States attorney, or in compromise of a threatened suit in forefeiture and not in satisfaction of duties or of a customs fee, charge, or exaction, then no relief can be granted the importers in this proceeding * * *.

Thus, the latter opinion also has no relevance, appellant says, because in this case monies were paid in "satisfaction of duties." The Senate Report relied on by the trial court relates, it is said, only to government suits to enforce penalty claims, "i.e., suits relating to the merits of such claims."

Appellant also asserts that "every other decision under 19 USC 1520 is protestable, and it would seem unlikely that the legislature would have intended that only 1520(a)(3) by singled out for denial of review by the [trial court]." Appellant says that § 1514 should be interpreted broadly to cover such a decision "in one or more of its categories. The courts have not hesitated to so interpret section 1514 when justice has required that review be available." *See e.g.*, *United States* v. *C. J. Tower & Sons of Buffalo, Inc.*, 61 CCPA 90, C.A.D. 1129, 499 F. 2d 1277 (1974).

Additionally, appellant argues that, although the trial court felt it was "undisputed," the payment of money was not made pursuant to the "voluntary disclosure" practice. The initial deposit was made only after a Customs audit "disclosed" alleged duty *t*eficiences and payment was demanded. The second deposit was made after a formal investigation was commenced, thus negating "voluntary disclosure" under the Customs Regulations referenced by the trial court. As further support for this conclusion, appellant notes that there "is nothing in the letters accompanying the deposits reflecting any disclosure of of violation of 19 U.S.C. 1592."

In any event, even if the deposits were made pursuant to "voluntary disclosure," appellant contends they were obviously deposited "on account of a [potential] penalty" as contemplated by 19 U.S.C. 1520(a)(3). Further, since mitigation of a penalty is dependent upon payment of monies, these must be characterized as "exactions." The word "deposited" in § 1520(a)(3) is not qualified and it must be assumed that it refers to *duties* or *other receipts* deposited on account of penalty. Whether that money is voluntarily tendered or exacted is not made a condition therein.

It is also argued by appellant that the deposits in this case may be charged as duties as that term is used in 19 U.S.C. 1514(a)(2).

349-002 O - 81 - 3

Lastly, appellant questions what would happen in a case where money was tendered pursuant to a voluntary disclosure and Customs subsequently found no violation. Does not Customs have the authority to refund the voluntary deposit under 19 U.S.C. 1520(a)(3)?

APPELLEE'S ARGUMENTS

The government argues that we should adopt the decision of the trial court that a refusal to refund monies voluntarily deposited does not constitute a "charge or exaction" under 19 U.S.C. 1514(a)(3). In addition to repeating the court's reasoning, appellee states that it has been held that customs duties are outside the scope of § 1514 (a)(3) and that a demand for payment of duties found due is not an exaction under which a 1514 protest may be filed. If this is so, then neither can a tender labeled as "withheld duties" be a protestable "exaction."

Further, 19 U.S.C. 1520(a)(2) specifically provides for refunds of "fees, charges, or exactions, *other than duties and taxes* * * *." Congress thus clearly did not intend that customs duties be considered a charge or exaction. This distinction in § 1520 between duties and charges or exactions should apply with equal force to § 1514.

The government says the inference by appellant that the monies were deposited on the basis of an underlying demand by the Customs Service, i.e., that they were deposited on account of a fine, penalty or forfeiture, is erroneous. In an affidavit, William F. Burns, Director of Classification and Value for the Customs District of Laredo, Texas, stated, "At the time the above monies were tendered, there was no fine, penalty, or forfeiture asserted against Carlingswitch, Inc., although the question of the proper duties owed by that firm was a matter under investigation over a period of time, resulting in the subsequent assessment of a penalty * * * on January 6, 1977, in the amount of $7,926,778.00." Accordingly, appellee concludes that both payments by appellant were completely voluntary and without demand. The remission of the subsequent penalty did not alter the fact that the payments in issue were tendered as "withheld duties" to ensure that the government was not deprived of its rightful duties, and in no way inferred that Customs believed an underpayment had not occurred.

Additionally, appellee asserts that appellant's characterization of the payments as "duties" constitutes an admission that the payments were not "exactions," "charges" or "money deposited on account of fine, penalty, or forfeiture," although appellant seems to want it both ways. Appellee concludes that:

> In any event, the holding of the trial court that this was a "penalty case" is not crucial to the outcome of this appeal. The

holding of the court was essentially the predicate upon which the denial of appellant's motion to amend its complaint was based. It is uncontroverted that appellant's payments were completely voluntary and were made without compulsion. Accordingly, the record supports the finding of the trial court that there was no "exaction" within the meaning of Section 514(a)(3), *supra*. It is thus unnecessary to reach the question as to whether this action was a "penalty case" and whether the Court of International Trade had jurisdiction to hear the action on that ground.

OPINION

As related above, appellant argues that although this is not "a penalty case," the deposit given the Customs Service was "on account of a potential penalty" and, thus, falls within the type of "money" referred to in 19 U.S.C. 1520(a)(3). Furthermore, appellant argues that the *refusal* to refund the deposit, paid "in satisfaction of duties," should be characterized as a "charge or exaction" as those words are used in 19 U.S.C. 1514(a)(3).

We agree with the government that the trial court did not have jurisdiction over this dispute under 28 U.S.C. 1582(a)(3) (1977). There would be no purpose in restating the rationale, supra, which leads us, as it did the court below, to conclude that a refusal to refund payments (which allegedly should be refunded pursuant to 19 U.S.C. 1520(a)(3)) does not constitute a "charge or exaction" as that term is used in 19 U.S.C. 1514(a)(3). *Alberta Gas Chemicals, Inc.* v. *Blumenthal*, supra.

[3] Appellant alleges it is in dispute whether these payments were made "voluntarily and without demand," a fact the trial court apparently utilized to hold that there was no "charge or exaction." Edward F. Rosenthal, an attorney for appellant, states in an affidavit that the payments were made only after appellant discovered that it was under investigation and entered into "negotiations with [Customs]." It is the *refusal to refund* which appellant alleges to be a "charge or exaction," however, not the two *payments* made to the Customs Service (otherwise appellant would have argued that the money should be refunded pursuant to 19 U.S.C. 1520(a)(2), which relates to "Fees, charges, and exactions"). That a refusal to refund money is not a § 1514 "charge or exaction" is the basis upon which we affirm the decision granting appellee's motion for summary judgment.

[4] Additionally, we disagree with the theory that the payments made by appellant should have been refunded pursuant to 19 U.S.C. 1520(a)(3). That section refers to monies paid "on account of a fine, penalty, or forfeiture," none of which had been charged against

appellant at the time of the payments in question. The monies were deposited as "additional tariff" and as "withheld duties" to *alleviate* any *potential* penalty. The two concepts are not equivalent.

In support of its conclusion that it did not have the authority to hear this dispute, the trial court stated this to be a "penalty case" over which the federal district courts have exclusive jurisdiction, citing 19 U.S.C. 1592. That section, however, is not a jurisdictional statute and we assume the court was referring to 28 U.S.C. 1355, which states:

> 1355. *Fine, penalty or forfeiture*
>
> The district courts shall have original jurisdiction, exclusive of the courts of the States, of any action or proceeding for the recovery or enforcement of any fine, penalty, or forfeiture, pecuniary or otherwise, incurred under any Act of Congress.

Noting our previous characterization of appellant's payments, we cannot regard these monies as for a "fine, penalty, or forfeiture* * *." Additionally, the Customs Service procedure known as "voluntary disclosure," if that is what appellant's payments may be said to have been paid under, is not one which may properly be labeled as an "Act of Congress." [4]

[5] As a policy matter, appellant posits, "What happens when, for example, the subsequent investigation contemplated by the Regulations results in a determination that no violation has occurred, and no additional duty is due?" In other words, how does one get money back if Customs refuses to refund it?

Notwithstanding that appellant has argued that its payments were *not* pursuant to "voluntary disclosure," it is apparently trying to impress upon us that the decision on appeal may "chill" participation in "voluntary disclosure," thus defeating the public policy behind this procedure, which is to encourage those who have violated the law to disclose such violation and make appropriate restitution to the government. It is true that because the statutory period for collection of the penalty has passed, appellant may not now contest with Customs, *as a defendant*, the correctness of the imposition of that penalty or the underlying undervaluation determination. Our decision, however, is limited to holding that, since appellant's only arguments are that "on account of penalty" in § 1520(a)(3) should be construed to mean "to alleviate any potential penalty," and that the *refusal to refund* monies paid should be characterized as a "charge

---

[4] There is some doubt that these monies were submitted pursuant to the "voluntary disclosure" practice of Customs, for appellant did not accompany its payments with a "voluntary disclosure of violations of Customs laws," and both parties acknowledge that appellant was under investigation at the time of the payments. 19 CFR 1711(a).

or exaction" as those terms are used in § 1514(a)(3), with which arguments we disagree, summary judgment was properly entered against appellant by the court below and its judgment is *affirmed*.

(C.A.D. 1265)

WAY DISTRIBUTORS, INC. *v.* UNITED STATES

1. CLASSIFICATION—EXPANDED RUBBER FOR SHOE SOLES

Court of International Trade decision sustaining classification of sheets of rubber used for making shoe soles as expanded rubber under item 770.80, TSUS, affirmed.

2. ID.

Presence of expansion, in and of itself, regardless of the method or manner by which it is detected, makes product classifiable as expanded rubber.

3. ID.

Absence of an industry standard of magnification to detect expansion does not demonstrate 30 diameters magnification test adopted by Customs Service results in incorrect classification.

4. PROTECTION OF U.S. INDUSTRY—RIGHT TO REMEDY FOR INJURY, 19 U.S.C. 1516

19 U.S.C. 1516 adds to the protection of U.S. industry by providing domestic manufacturers with the legal right to a remedy for injury resulting from incorrect appraisement or classification of imported merchandise.

5. ID.

Congress did not intend to sever the informal links of communication that traditionally have existed between U.S. industry and Government by enactment of 19 U.S.C. 1516.

WAY DISTRIBUTORS, INC., APPELLANT, *v.* UNITED STATES, APPELLEE

No. 81-2

United States Court of Customs and Patent Appeals, June 18, 1981,
Appeal from United States Customs Court, C.A.D. No. 1265

[Affirmed]

Walter E. Doherty, Jr. and *Williams E. Melahn*, attorneys for appellant.

Thomas S. Martin, Acting Assistant Attorney General, *David M. Cohen*, Director, *Joseph I. Liebman*, Attorney in charge, *Jerry P. Wiskin*, for appellee.

David R. Ostheimer and *Sidney H. Kuflik*, Amicus Curiae.

[Oral argument on May 4, 1981 by *William E. Melahn*, for appellant and *Jerry P. Wiskin* for appellee.]

Before MARKEY, *Chief Judge*, RICH, BALDWIN, MILLER, and NIES, *Associate Judges*.

NIES, *Judge*.

[1] This appeal is from the judgment of the United States Customs Court (now the United States Court of International Trade), — Cust. Ct. — C.D. 4870 (1980), sustaining the classification of appellant's goods as expanded rubber. We affirm.

BACKGROUND

Appellant imported sheets of rubber, which are used in making shoe soles, from West Germany in 1972 and 1974.

The importations were classified as "expanded rubber" under item 770.80 of the Tariff Schedules of the United States (TSUS).[1] Appellant contends the products are "semi-expanded" not "expanded" and, therefore, should properly be classified as rubber sheets under item 771.42, TSUS,[2] or, alternatively, as rubber articles not specially provided for under item 774.60, TSUS.[3]

Appellant also asserted that Ruling 202–71 of the Office of Regulations and Rulings (ORR), issued May 12, 1971, upon which the disputed classification was based, was put into effect in violation of the rule-making provisions of the Administrative Procedure Act, 5 U.S.C. 553, and without affording appellant the safeguards of section 516 of the Tariff Act of 1930, 19 U.S.C. 1516.

The Court of International Trade found appellant's goods, which the evidence showed were expanded by means of a blowing agent, albeit to a lesser degree than some forms of expanded rubber, were properly classified.[4] The court rejected appellant's contention that where expansion could be detected only with magnification, and particularly 30 power magnification, such products are commercially different from the expanded rubber products (e.g., sponge rubber) classifiable under item 770.80, TSUS.

---

[1] Schedule 7, Part 12, Subpart A:

	Expanded, foamed, or sponge rubber or plastics, and articles not specially provided for wholly or almost wholly of such rubber or plastics:	
	* * * * * * *	
	Flexible:	
	* * * * * * *	
770.80	Other	12.5% ad val.

[2] Schedule 7, Part 12, Subpart C:

	Films, strips, sheets, plates, slabs, blocks, filaments, rods, seamless tubing, and other profile shapes, all the foregoing wholly or almost wholly of rubber or plastics:	
	* * * * * * *	
	Not of cellulosic plastics materials:	
	Film strips, and sheets, all of the foregoing which are flexible:	
	* * * * * * *	
771.42	Other	6% ad val.

[3] Schedule 7, Part 12, Subpart D:

	Articles not specially provided for, of rubber or plastics:	
	* * * * * * *	
774.60	Other	8.5% ad val.

[4] Expansion of rubber is accomplished by the use of a blowing agent, such as azodicarbonamide, during production which increases the volume and results in the formation of closed cell structure.

Addressing the procedural issues raised by appellant, the court below held that ORR Ruling 202–71, which established a standard of microscopic enlargement of 30 diameters for the detection of expansion in rubber, is an "interpretative rule" which defines the agency's understanding of item 770.80, TSUS. Such rulings are specifically exempted from the notice and participation requirements of 5 U.S.C. 553. The court also held that section 516 of the Tariff Act of 1930, which allows American manufacturers to complain and seek to change the classification of imported merchandise, does not establish the sole manner in which an interested party may communicate its views to Customs. Thus, there was no impropriety in issuing ORR Ruling 202–71 as a result of a letter from counsel for the Rubber Manufacturers Association, Inc. (RMA) concerning the classification of appellant's merchandise.

OPINION

Turning first to the classification issue, we agree with the court below that the imported products, which appellant characterizes as "semi-expanded," are "expanded" within the meaning of item 770.80, TSUS, and that appellant failed to prove error in the Customs Service's use of a 30 diameters magnification standard in order to detect expansion.[5] The plain language of the tariff provision makes it encompass all expanded rubber without regard to various degrees of expansion. A product either is or is not expanded. Thus, appellant's product, which contains an effective blowing agent, *is* expanded for tariff purposes. Moreover, the tariff schedule is not directed toward the manner in which such expansion is or can be detected. [2] Presence of expansion, in and of itself, regardless of the method or manner by which it is detected, makes it classifiable as expanded rubber. [3] The absence of an industry standard of magnification to detect expansion does not demonstrate that the test adopted by the Customs Service results in incorrect classification.[6]

Turning to the procedural issues, appellant has expressly abandoned

---

[5] Appellant's assertion that at 30 diameters magnification an observer cannot discriminate between a cross-section of steel and a cross-section of rubber is irrelevant and unsupported. The photograph referenced by appellant depicts not a cross-section of steel, but rather the surface of a sheet of 32 gauge cold rolled steel after it was sand blasted. That pitting inflicted on a surface can be observed with 30 diameters magnification does not indicate that cellular structure of steel can be observed under such magnification, or that such magnification is improper for detecting cellular structure in rubber. Appellant proffers no basis for rejecting a 30 diameters magnification standard other than there being "no magnification test recognized by the Rubber Industry for determining expansion of rubber."

[6] Appellant contends that the Customs Service should determine whether an article is expanded by performing a series of tests consisting of not only visual, naked eye inspection of the cellular structure of the rubber, but also determination of its hardness by a Shore A hardness test, and its specific gravity.

Testimony below clearly indicates that the specific gravity of the imported article is not determinative of whether the article is expanded, and that the Shore A hardness test has no bearing on such determination. Accordingly, such additional tests are inappropriate.

its assertion that ORR Ruling 202–7 was issued in violation of the Administrative Procedure Act, and relies solely on purported violations of section 516 of the Tariff Act of 1930.[7] Accordingly, we need only address the § 516 issue, which appellant argues was not adequately considered below.

Appellant contends that a June 3, 1970 letter from RMA's attorneys to the Customs Service must be construed as a defective complaint under § 516; that RMA had no standing to file such a complaint because it is a trade association; that ORR Ruling 202–71 issued as a result of that letter;[8] that ORR Ruling 202–71 was issued in violation of § 516 because the ruling was based on a complaint filed by a party having no standing to file such a complaint; that the publication and 30-day grace period requirements of § 516 were ignored; and that, consequently, classification in item 770.80, TSUS, is "null and void and of no effect."[9]

Appellant contends that the court below failed to discuss these issues. Moreover, appellant contends that "any attempt to secure a classification ruling by domestic interests, which circumvents

---

[7] In pertinent part, 19 U.S.C. 1516 in effect on June 3, 1970, read as follows:

§ 1516. Appeal or protest by American procedures * * *.

(b) Classification. The Secretary of the Treasury shall, upon written request by an American manufacturer, producer, or wholesaler, furnish the classification of, and the rate of duty, if any, imposed upon, designated imported merchandise of a class or kind manufactured, produced, or sold at wholesale by him. If such manufacturer, producer, or wholesaler believes that the proper rate of duty is not being assessed, he may file a complaint with the Secretary, setting forth a description of the merchandise, the classification, and the rate or rates of duty he believes proper, and the reasons for his belief. If the Secretary decides that the classification of, or rate of duty assessed upon, the merchandise is not correct, he shall notify the collectors as to the proper classification and rate of duty and shall so inform the complainant, and such rate of duty shall be assessed upon all such merchandise entered for consumption or withdrawn from warehouse for consumption after thirty days after the date such notice to the collectors is published in the weekly Treasury Decisions. If the Secretary decides that the classification and rate of duty are correct, he shall so inform the complainant. If dissatisfied with the decision of the Secretary, the complainant may file with the Secretary, not later than thirty days after the date of such decision, notice that he desires to protest the classification of, or rate of duty assessed upon, the merchandise. Upon receipt of such notice from the complainant, the Secretary shall cause publication to be made of his decision as to proper classification and rate of duty and of the complainant's desire to protest, and shall thereafter furnish the complainant with such information as to the entries and consignees of such merchandise, entered after the publication of the decision of the Secretary at the port of entry designated by the complainant in his notice of desire to protest, as will enable the complainant to protest the classification of, or rate of duty imposed upon, such merchandise in the liquidation of such an entry at such port. * * *

Section 516 was amended by Pub. L. 91-271 enacted June 2, 1970, effective October 1, 1970, but to be retroactively applied in some instances. The parties do not argue that this amendment affects the issues raised here.

[8] The Customs Service responded to RMA by letter dated March 25, 1971, advising that a Customs' laboratory report indicated the samples furnished by RMA were synthetic rubber which had been foamed or expanded to a slight degree; that in Treasury Decision (T.D.) 56484(36) [sic, (86)] certain other rubber soling material, also from West Germany, was found to be expanded and classifiable under item 770.80, TSUS, and that the samples are properly classifiable under the same item; and that the presence of a blowing agent is not sufficient in and of itself to result in an article being classifiable under the provisions for expanded rubber, but rather the article must have a cellular expanded constitution, which is detected by microscopic examination of a cross-section of the article using an enlargement of 30 diameters.

This letter was distributed to all Customs officers on May 12, 1971, under the identifying number ORR 202-71, in order that such merchandise would be uniformly classified at all ports. Appellant's earliest entries effected by the ruling were made the following year.

[9] RMA, as amicus curiae before this court, asserts that its June 3, 1970 letter was not intended to be, and could not have been, a § 516 complaint; that prior to a complaint being filed, § 516 requires the submission of a written classification request; that § 516 does not require publication of either the written classification request or Customs' response thereto; and that the June 3, 1970 letter can, at most, be construed as the written classification request which precedes the filing of a complaint.

Section 516 * * *, must be stricken down as wholly improper, illegal, and void." While acknowledging the Customs Service may on its own initiative make interpretative rulings, appellant would deprive Customs of this authority where a ruling results from information brought to its attention informally by interested parties.

The court below rejected appellant's contentions under § 516, stating:

> In making [interpretative ruling ORR Ruling 202-71, the Customs Service] was not required to consult plaintiff nor was it required to avoid communication with those advocating an Interpretation adverse to plaintiff. Interested parties may communicate their views to the agency at any time and in any manner not inconsistent with statute or law. The existence of Section 516 of the Tariff Act of 1930, which allows an American Manufacturer to complain and seek to change the classification of imported merchandise does not mean that Section 516 is the only permissible way for American Manufacturers to attempt to bring about a change in import classification. Such a restrictive view finds no support in law or legislative history.

We agree. **[4]** Section 516 adds to the protection of U.S. industry by providing domestic manufacturers with the legal right to a remedy for injury resulting from incorrect appraisement or classification of imported merchandise. **[5]** Appellant refers repeatedly to the legislative history of the section but fails to provide even a suggestion from such references that through enactment of § 516 Congress intended to sever the informal links of communication that traditionally have existed between our industry and Government.[10] When a U.S. manufacturer does resort to § 516 proceedings, the safeguards provided thereunder to an importer become operative. However, those provisions do not deprive the Customs Service of authority to issue an interpretative ruling following informal consultation with representatives of U.S. industry.

Thus, representatives of U.S. rubber manufacturers could properly communicate with Customs Service officers without the ruling resulting from such communication being, as characterized by appellant, "wholly improper, illegal, and void." Accordingly, the Court of International Trade did not need to address the subsidiary issues of appellant's § 516 argument.

CONCLUSION

In view of the foregoing, the judgment of the Court of International Trade upholding classification of appellant's imported sheets of rubber as expanded rubber under item 770.80, TSUS, is *affirmed*.

---

[10] For a discussion contrary to appellant's view, see S. Rep. No. 37, 71st Cong., 1st Sess., *reprinted in* 71 Cong. Rec. 3378 (1929) in connection with a proposed amendment of § 516 to give labor the same standing that industry had under § 516.

United States Court of International Trade

Our Federal Plaza
New York, N.Y. 10007

Chief Judge

Edward D. Re

Judges

Paul P. Rao
Morgan Ford
Scovel Richardson
Frederick Landis
James L. Watson
Herbert N. Maletz
Bernard Newman
Nils A. Boe

Senior Judge

Samuel M. Rosenstein

Clerk

Josept E. Lombardi

Decisions of the United States Court of International Trade

(Slip Op. 81–51)

TOYOTA MOTOR SALES (U.S.A.), INC., PLAINTIFF *v.* UNITED STATES, DEFENDANT

Court No. 81–1–00048

Memorandum Opinion

(Dated June 12, 1981)

Cladouhos & Brashares (*Harry W. Cladouhos, William C. Brashares* and *Ellen J. Gleberman* on the brief) for the plaintiff.

Stuart E. Schiffer, Acting Assistant Attorney General; *Joseph I. Liebman*, Attorney in Charge, International Trade Field Office, Commercial Litigation Branch (*Saul Davis* on the brief) for the defendant.

LANDIS, *Judge:* Defendant moves for an order pursuant to rules 16 and 26(f) of this Court granting a pre-trial conference and/or a discovery conference.

At this juncture issue has been joined and the parties have answered the first set of interrogatories propounded by each other. The motion papers indicate that a motion by plaintiff to compel discovery under rule 37(a) is imminent.

The motion for a pre-trial conference pursuant to rule 16 is premature in this case. The purpose of a pre-trial conference is to facilitate the actual trial of the case. Normally when a case is ready for trial the *parties will have completed discovery, preliminary motions will have been ruled upon* and counsel will be thoroughly familiar with the case which increases the chances of settlement.[1] Some cases may present an exception to the general rule. Under certain circumstances it may be beneficial to hold such a conference where multiple parties are involved and there may be a separation or consolidation of trials or where the conference is directed toward a clearly delineated issue central to the litigation.

In the present case there is insufficient information available to the court for the court to prepare any meaningful guidelines or questions to be posed at such a conference in order to attain the long-range effect of facilitating the actual trial of the matter.

The discovery conference motion pursuant to rule 26(f) is intended to prevent abuse of the discovery procedures. The rule is new not only to this Court but to other federal courts as well having become effective on August 1, 1980. The rule is specific in what must be submitted when a request is made by an attorney for a party. Here, the request is woefully lacking. No proposed plan and schedule of discovery is submitted (26(f)(2)). There is no statement of the issues involved that serve as the basis and purpose of this conference (26(f)(1)). There is no proposed limitation to be placed on the discovery nor any proposed orders with respect to discovery (26(f) (3) and (4)).

Instead, defendant appears to be attacking Count II of plaintiff's complaint. Taken to its logical conclusion, this attack is tantamount to saying that Count II fails to state a claim upon which relief can be granted or that the court lacks subject matter jurisdiction or some other type of dispositive argument properly raised on motion for judgment on the pleadings or summary judgment.

If the defendant feels that on plaintiff's motion to compel major issues may not be determined it can raise said issues by a proper rule 12 motion. The court is willing to assist in formulating a discovery plan provided the parties comply with the statutory frame-

[1] See, *Handbook for Effective Pretrial Procedure*, adopted by the Judicial Conference of the United States (1964), 37 F.R.D. 255, 263.

work. The court will also hear any request for an accelerated briefing period for motions made to compel and any cross-motions thereto. However, the court will not deprive a party of discovery on a dispositive issue merely upon a discovery conference hearing.

Accordingly, defendant's motion pursuant to rules 16 and 26(f) is denied without prejudice to renewal upon compliance with the relevant rules.

(Slip Op. 81–52)

INTER-PACIFIC CORP., PLAINTIFF *v.* UNITED STATES, DEFENDANT

Court No. 77-1-00944

Footwear

[Plaintiff's motion for summary judgment denied; defendant's cross-motion for summary judgment denied.]

(Dated June 12, 1981)

Leonard M. Fertman, Professional Corporation (*James W. McDonald* on the brief), for the plaintiff.

Stuart E. Schiffer, Acting Assistant Attorney General; *Joseph I. Liebman*, Attorney in Charge, International Trade Field Office, Commercial Litigation Branch (*Jerry P. Wiskin* on the brief), for the defendant.

LANDIS, *Judge:* Pursuant to rule 8.2 plaintiff moves for summary judgment sustaining its claim that certain footwear manufactured in Taiwan and imported into the United States between September and December 1975 should be classified under TSUS item 700.55. Defendant cross-moves for summary judgment sustaining the classification by the customs official under TSUS item 700.60 and, further, for summary judgment overruling plaintiff's claim and dismissing the action.

A review of plaintiff's statement of material facts and defendant's response thereto, as well as the amended pleadings, indicates that there are material issues of fact to be determined upon a trial on the merits which precludes the granting of summary judgment to either party. *The American Greiner Electronic, Inc.* v, *United States*, 77 Cust. Ct. 164, C.R.D. 76–9 (1976); *S.S. Kresge Co.* v. *United States*, 77 Cust. Ct. 154, C.R.D. 76–6 (1976).

The central issue in this case is the composition of the exterior surface area of the upper. Plaintiff claims it to be 100 percent vinyl (Statement of Material Facts, No. 3) while defendant claims otherwise. Before the court can determine the main issue it must first resolve the crucial peripheral issue of what actually constitutes the shoe upper. Once again the parties disagree.

Plaintiff claims that the cotton embroidery sewn on the shoe is not part of the upper because it performs no utilitarian function and

its addition does not make the footwear any more useful than if it were manufactured without the embroidery (Material Fact No. 6). Defendant denies this.

Plaintift further claims that the stitching is ornamental in character and that ornamental decorations that provide no utilitarian function are disregarded in determining what constitutes the uppers of footwear (Amended Complaint, paragraph 7 and Material Fact No. 7). Defendant also denies this claim.

In support of its motion plaintiff submits affidavits of Frank G. Arnstein and Lewis Jackson. Both affiants agree that the embroidered stitching in issue is purely ornamental serving no utilitarian function and the removal of which would not render the merchandise unserviceable as footwear nor impair the structural soundness thereof. Neither affidavit states whether removal of the stitching would damage the footwear or render it unsalable as footwear.

Defendant submits an affidavit of Irma Rueckert, a chemist for the United States Customs Service, which indicates that the exterior surface area of the upper consists of 77.5 percent plastic and 22.5 percent fibers.

Additionally, the parties have submitted a number of sample shoes with their summary judgment motions.

Examination of the samples submitted raises a strong issue as to whether the sewing is functional or utilitarian to some degree.[1] In examining the samples it appears to the Court that the stitching not only pierces the plastic upper but also pierces the material that acts as a backing to the plastic. In this capacity the sewing may be functional in that it acts as a fastening of the plastic to the backing in addition to the glue used as a fastening agent. It is not beyond peradventure that evidence could be adduced at a trial showing the stitching to be both ornamental and functional. It is further noted that the stitching has created hundreds of tiny perforations and that removal of the stitching might damage or make the shoe unsalable.

It is anticipated that on the trial testimony subjected to the safeguards of cross-examination will be elicited as to what constitutes the upper and the exterior surface area of the upper of the footwear in issue.

Further, the issues of functionality and ornamentation are not satisfactorily settled by the proof submitted on this motion. They constitute a question of fact to be determined with reference to the particular article before the Court. *Overseas Mailman, Inc.* v. *United States*, 83 Cust. Ct. 165, C.R.D. 79–15 (1979).

Accordingly, the motion and cross-motion for summary judgment are denied.

[1] It is well settled that a sample is a potent witness. *United States* v. *The Halle Bros. Co.*, 20 CCPA 219, T.D. 45995 (1932).

Decisions of the United States Court of International Trade

Abstracts

Abstracted Protest Decisions

DEPARTMENT OF THE TREASURY, *June 15, 1981.*

The following abstracts of decisions of the United States Court of International Trade at New York are published for the information and guidance of officers of the Customs and others concerned. Although the decisions are not of sufficient general interest to print in full, the summary herein given will be of assistance to Customs officials in easily locating cases and tracing important facts.

WILLIAM T. ARCHEY,
Acting Commissioner of Customs.

DECISION NUMBER	JUDGE & DATE OF DECISION	PLAINTIFF	COURT NO.	ASSESSED	HELD	BASIS	PORT OF ENTRY AND MERCHANDISE
				Par. or Item No. and Rate	Par. or Item No. and Rate		
P81/88	Rao, J. June 11, 1981	Cal Custom Hawk	79-1-00006	Item 648.97 11% Item 646.42 9.5%	Item 660 52 4%	Agreed statement of facts	Los Angeles Wing nuts and valve cover wings
P81/89	Landis, J. June 11, 1981	Cal Custom Hawk et al.	75-2-00506, etc.	Item 648.97 11% Item 657.20 9.5%	Item 660.52 4%	Agreed statement of facts	Los Angeles Wing nuts

Decisions of the United States Court of International Trade

Abstracts

Abstracted Reappraisement Decisions

DECISION NUMBER	JUDGE & DATE OF DECISION	PLAINTIFF	COURT NO.	BASIS OF VALUATION	HELD VALUE	BASIS	PORT OF ENTRY AND MERCHANDISE
R81/225	Rao, J. June 10, 1981	The Easterling Company	77-6-00992, etc.	Export value	Invoice unit values, net packed	Agreed statement of facts	Chicago Porcelain dinnerware and ashtrays
R81/226	Rao, J. June 10, 1981	Kent International	78-11-01966, etc.	Export value	F.o.b. prices set forth in invoices of Willing Co., Ltd., which accompany the involved entries	Agreed statement of facts	New York Bicycles
R81/227	Rao, J. June 10, 1981	Kent International	78-11-02062, etc.	Export value	F.o.b. prices set forth in invoices of Willing Industry Co., Ltd., which accompany the involved entries	Agreed statement of facts	New York; San Francisco; San Juan; Boston; Philadelphia Bicycles

R81/228	Re, C.J. June 11, 1981	Marubeni Iida (America) Inc.	75-7-01825	Export value	Unit values found by appraising customs official, less ocean freight and marine insurance, and without additions to said values for currency fluctuation	C.B.S. Imports Corp. v. U.S. (C.D. 4739)	New York Steel bars
R81/229	Re, C.J. June 11, 1981	Nichimen Co., Inc.	76-1-00258, etc	Export value	Appraised values shown on entry papers less additions included to reflect currency revaluation	C.B.S. Imports Corp. v. U.S. (C.D. 4739)	New York Miscellaneous articles
R81/230	Rao, J. June 11, 1981	Micro-Mo Electronics, Inc.	80-11-00083	Export value	Unit invoice value from commercial invoices related to involved entries	Agreed statement of facts	Cleveland Miscellaneous articles
R81/231	Landis, J. June 11, 1981	Micro-Mo Electronics, Inc.	78-12-02110	Export value	Unit invoice value from commercial invoices related to involved entries	Agreed statement of facts	Cleveland Miscellaneous articles
R81/232	Landis, J. June 11, 1981	Micro-Mo Electronics, Inc.	79-7-01093	Export value	Unit invoice value from commercial invoices related to involved entries	Agreed statement of facts	Cleveland Miscellaneous articles
R81/233	Landis, J. June 11, 1981	Micro-Mo Electronics, Inc.	79-12-01804	Export value	Unit invoice value from commercial invoices related to involved entries	Agreed statement of facts	Cleveland Miscellaneous articles

Appeal to U.S. Court of Customs and Patent Appeals

APPEAL 81-17—The United States *v.* Miracle Exclusives, Inc.—GERMINATION TRAYS—AGRICULTURAL OR HORTICULTURAL IMPLEMENTS—SPROUTING TRAYS—BIOSNACK OR BIOSTA SPROUTERS—TSUS. Appeal From Slip Op. 81-16.

The merchandise in this case consists of plastic germination trays—horticultural implements—known as "Biosnack" or "Biosta" sprouters which were manufactured in Switzerland and Canada. The imported merchandise is used with water to sprout seeds, which are subsequently eaten, and consists of three trays, syphon caps, a catch basin, and a lid, composed of plastic. Upon entry into the United States, the merchandise was classified under Item 772.15, TSUS, as "Articles chiefly used for preparing, serving, or storing food or beverages, or food or beverage ingredients; and household articles not specially provided for; all the foregoing of rubber or plastics—Other," and assessed with duty at 11.5 per centum ad valorem or 8.5 per centum ad valorem, depending upon the date of entry.

Plaintiff-appellee claims that the merchandise is entitled to entry free of duty under Item 666.00, TSUS, as agricultural or horticultural implements not specially provided for. The United States Court of International Trade decided that the sprouting trays involved are horticultural implements entitled to entry free of duty under Item 666.00, TSUS, as claimed.

Defendant-appellant, being dissatisfied with the decision and judgment of the United States Court of International Trade, appeals to the United States Court of Customs and Patent Appeals, and respectfully prays pursuant to Section 1541(a) and 2601 (a) and (b), Title 28, United States Code, to review the questions involved therein and to grant such relief in the premises as to the Court shall seem just.

APPEAL 81-18—The United States *v.* Mast Industries, Inc.—WOMEN'S PANTS—OTHER WOMEN'S WEARING APPAREL NOT ORNAMENTED—BUTTONHOLING AND POCKET-SLITTING OPERATIONS—TSUS. Appeal From Slip Op. 81-21.

The merchandise in this case consists of precut fabric components of women's pants which were exported from the United States to El Salvador to be assembled into finished garments. In addition to sewing the components together, when the merchandise was being assembled in El Salvador, the components were subjected to buttonholing and/or pocket-slitting by the foreign assembler. Upon entry into the United States at the Port of Miami, Florida, the merchandise was classified on liquidation as "other women's, girls', or infants' wearing apparel, not ornamented: of cotton: not knit: other," and assessed with duty at the rate of 16.5 percent ad valorem under TSUS Item 382.33. The duty was assessed, pursuant to TSUS Item 807, on the full value of the merchandise less the cost or value of some of the components, which were products of the United States, and which were used in assembling the imported merchandise.

Plaintiff-appellee contested the decision of the Customs Service; specifically, for its failure to deduct from the full value of the imported pants, pursuant to TSUS Item 807, the cost or value of the United States components which were subjected to buttonholing and/or pocket slitting by the foreign assembler of the imported merchandise. In addition, plaintiff-appellee contended that the components in issue did not lose their physical identity in the imported articles by change in form, shape, or otherwise; nor did the components advance in value or improve in condition abroad except by operations which constitute assembly or which were incidental to the assembly process.

Based upon the evidence presented at the trial of the case, the United States Court of International Trade decided in favor of plaintiff-appellee, and judgment was entered accordingly.

Defendant-appellant, being dissatisfied with the decision and judgment of the United States Court of International Trade, appeals to the United States Court of Customs and Patent Appeals, and prays, pursuant to Sections 1541(a) and 2601 (a) and (b), Title 28, United States Code, to review the questions involved therein and to grant such relief in the premises as to the Court shall seem just.

International Trade Commission Notices

Investigations by the U.S. International Trade Commission

DEPARTMENT OF THE TREASURY, JUNE 25, 1981

The appended notices relating to investigations by the U.S. International Trade Commission are published for the information of Customs officers and others concerned.

WILLIAM T. ARCHEY,
Acting Commissioner of Customs.

In the Matter of CERTAIN STABILIZED HULL UNITS AND COMPONENTS THEREOF AND SONAR UNITS UTILIZING SAID STABILIZED HULL UNITS	Investigation No.3 37-TA-103

Order

Pursuant to my authority as Chief Administrative Law Judge of this Commission, I hereby designate Administrative Law Judge Janet D. Saxon as Presiding Officer in this investigation.

The Secretary shall serve a copy of this order upon all parties of record and shall publish it in the Federal Register.

Issued: June 10, 1981.

DONALD K. DUVALL,
Chief Administrative Law Judge.

Capers Imported in Bulk: Competitive Status Under Section 504(d) of the Trade Act of 1974

AGENCY: United States International Trade Commission.

ACTION: In accordance with the provisions of section 332(g) of the Tariff Act of 1930 (19 U.S.C. 1332(g)), the Commission has

best copy available

instituted investigation No. 332–124 for the purpose of providing advice to the U.S. Trade Representative (USTR) on whether any article like or directly competitive with capers imported in bulk was produced in the United States on the date of enactment of the Trade Act of 1974 (hereinafter referred to as "the Act"). This advice is sought in connection with section 504(d) of the Act (19 U.S.C. 2464(d)).

EFFECTIVE DATE: June 9, 1981.

FOR FURTHER INFORMATION CONTACT: Mr. John Reeder, Agriculture, Fisheries, and Forest Products Division, U.S. International Trade Commission, Washington, D.C. 20436 (Telephone 202–724–1754).

SUPPLEMENTAL INFORMATION: On May 22, 1981, pursuant to the authority of the President delegated to the USTR by Executive Order 11846, as amended by Executive Order 11947, the USTR requested certain advice on capers imported in bulk.

All capers, whether crude or processed and whether in bulk or packaged for retail sale, are covered by item 161.07 of the Tariff Schedules of the United States (TSUS). In advice provided to the President in investigation Nos. TA–131(b)–5, TA–503(a)–7, and 332–113 in February 1981, the Commission indicated that articles covered by TSUS item 161.07 are like or directly competitive with articles produced in the United States on the date of enactment of the Act (January 3, 1975). Therefore if the entire TSUS item 161.07 were designated as an eligible article under the U.S. Generalized System of Preferences, imports from any GSP-eligible country supplying 50 percent or more of the value of total caper imports would generally not receive duty-free treatment because of the "competitive-need" provisions of section 504(c)(1)(B) of the Act.

Section 504(d) of the Act exempts from section 504(c)(1)(B) articles for which no like or directly competitive article was being produced on January 3, 1975. The USTR has requested that the Commission determine whether any article like or directly competitive with capers imported in bulk, considered separately from all other forms of capers, was produced in the United States on January 3, 1975. If the Commission were to find that there were no such like or directly competitive products, then the competitive need limits of section 504(c)(1)(B) would generally not apply to any GSP-eligible country supplying 50 percent or more of the value of capers imported in bulk and such country would receive duty-free treatment.

WRITTEN SUBMISSIONS: While there is no public hearing scheduled for this study, written submissions from interested parties

are invited. Commercial or financial information which a party desires the Commission to treat as confidential must be submitted on separate sheets of paper, each clearly marked "Confidential Business Information" at the top. All submissions requesting confidential treatment must conform with the requirements of section 201.6 of the Commission's *Rules of Practice and Procedure* (19 CFR 201.6). All written submissions, except for confidential business information, will be made available for inspection by interested persons. To be ensured of consideration by the Commission in this study, written statements should be submitted at the earliest practicable date, but no later than July 10, 1981. All submissions should be addressed to the Secretary, United States International Trade Commission, 701 E Street NW., Washington, D.C. 20436.

By order of the Commission.

Issued: June 10, 1981.

KENNETH R. MASON,
Secretary.

In the Matter of
CERTAIN CARD DATA IMPRINTERS AND COMPONENTS THEREOF } Investigation No. 337–TA–104

Order

Pursuant to my authority as Chief Administrative Law Judge of this Commission, I hereby designate Administrative Law Judge Janet D. Saxon as Presiding Officer in this investigation.

The Secretary shall serve a copy of this order upon all parties of record and shall publish it in the Federal Register.

Issued: June 10, 1981.

DONALD K. DUVALL,
Chief Administrative Law Judge.

In the Matter of
CERTAIN AIRLESS PAINT SPRAY PUMPS AND COMPONENTS THEREOF } Investigation No. 337–TA–90

Commission Order

On November 17, 1980, the Commission instituted the above-referenced investigation to determine whether there is a violation of section 337(a) of the Tariff Act of 1930 (19 U.S.C. § 1337(a)) in

the importation into the United States of certain airless paint spray pumps and components thereof, or in their sale, by reason of the alleged infringement of U.S. Letters Patents 3,254,845 and 3,367,270 and U.S. Reissue Patent 29,055, the effect or tendency of which is to destroy or substantially injure an industry, efficiently and economically operated, in the United States. Notice of the Commission's investigation was published in the Federal Register of November 21, 1980. (45 F.R. 77190.)

During a hearing before the Administrative Law Judge (held on March 31, 1981, through April 2, 1981). Complainant Wagner Spray Tech Corp., presented testimony indicating that one Italian and four Japanese companies may be about to import allegedly infringing pumps into the United States in the near future. These and similarly situated companies may be vitally concerned with the outcome of this investigation and may wish to submit comments to the Commission on the issues of public interest and remedy. One or more of the parties to this investigation may be in a good position to identify interested nonparties so that the Commission may invite their comments at the appropriate time.

Accordingly, it is hereby ORDERED THAT—

1. The parties shall submit to the Commission by June 19, 1981, a list containing the names and addresses of companies and/or persons not a party to this investigation who may have relevant information to present to the Commission concerning the issues of violation, public interest and remedy, particularly those nonparties which may be on the verge of involvement in the importation of pumps alleged to infringe the patents in issue in this investigation; and

2. The Secretary shall serve a copy of this Order upon each party of record in this investigation.

By order of the Commission.

Issued: June 12, 1981.

KENNETH R. MASON,
Secretary.

In the Matter of
CERTAIN WET MOTOR CIRCULATING PUMPS AND COMPONENTS THEREOF

Investigation No. 337–TA–94

Notice of Cancellation of Prehearing Conference and Hearing

Notice is hereby given that the prehearing conference and hearing scheduled for June 29, 1981 (46 Fed. Reg. 28770, May 28, 1981) are cancelled.

The Secretary shall publish this Notice in the Federal Register.

Issued: June 16, 1981.

JANET D. SAXON,
Administrative Law Judge.

In the Matter of
CERTAIN MODULAR PUSHBUTTON SWITCHES AND COMPONENTS THEREOF } Investigation No. 337-TA-96

Notice of Prehearing Conference and Hearing

Notice is hereby given that a prehearing conference will be held in this case at 9:00 a.m. on July 27, 1981, in the Dodge Center, Room 201, 1010 Wisconsin Avenue, N.W., Washington, D.C., and the hearing will commence immediately thereafter.

The purpose of the prehearing conference is to review the trial memoranda submitted by the parties, to stipulate exhibits into the record, and to discuss any questions raised by the parties relating to the hearing.

The Secretary shall publish this notice in the Federal Register.

Issued: June 17, 1981.

JANET D. SAXON,
Administrative Law Judge.

In the Matter of
CERTAIN SURFACE GRINDING MACHINES AND LITERATURE FOR THE PROMOTION THEREOF } Investigation No. 337-TA-95

Notice of Commission Request for Comments Regarding Settlement Agreement

AGENCY: U.S. International Trade Commission.

ACTION: Request for public comment on proposed settlement agreements.

SUMMARY: The settlement agreements would result in the termination of the investigation as to respondents Bob's Machinery Sales and Cassiere Machinery Company. This notice requests comments from the public on the proposed settlement agreements within thirty (30) days of publication of this notice in the Federal Register.

DATES: Comments will be considered if received within 30 days of publication of this notice. Comments should conform with section 201.8 of the Commission's Rules of Practice and Procedure (19 CFR § 201.8), and should be addressed to Kenneth R. Mason, Secretary, U.S. International Trade Commission, 701 E Street NW., Washington, D.C. 20436.

SUPPLEMENTARY INFORMATION: Complainant Brown and Sharpe Manufacturing Company and respondents Bob's Machinery Sales and Cassiere Machinery Company have moved jointly for termination of this investigation as to those respondents on the basis of settlement agreements. On May 21, 1981, the presiding officer recommended that the joint motions be granted.

Notice of the institution of the investigation was published in the Federal Register of January 22, 1981 (46 F.R. 7107).

SETTLEMENT AGREEMENTS: The two settlement agreements, which are identical except for the name of the respondent, provide in pertinent part as follows:

> Pending a determination by the U.S. International Trade Commission of the complaint filed in the investigation, RESPONDENT shall refrain from importing, buying, selling, leasing, or otherwise transferring Surface Grinding Machines into the United States directly or indirectly from Taiwan or other countries, of the type and style which
>
> (a) are reproductions, copies, colorable imitations or simulations of B&S High Precision Surface Grinding Machines that have been sold under the designations 510, 612, 618, 824, 1024, 1030, 1244, and 1236, or
>
> (b) are of the type offered for sale heretofore by Lian Feng Machine Co. of Taiwan, China, identified as Exhibit 14 attached to the B&S complaint in the investigation.
>
> RESPONDENT shall refrain from copying, reprinting, using, selling or distributing any unauthorized copies of manuals, catalogs, brochures, or other printed material prepared or owned by B&S and bearing a B&S copyright notice.
>
> RESPONDENT shall refrain from using any B&S manual, catalog, or other printed material, whether or not protected by copyright, in connection with the maintenance, repair or sale of surface grinding machines or components thereof, other than B&S surface grinding machines or components thereof.
>
> RESPONDENT shall refrain from importing, buying, selling or otherwise transferring Surface Grinding Machines made in foreign countries which simulate the trade dress of B&S High Precision Surface Grinding Machine sa sexemplified by Exhibits 14, 15, and 16B of the Complaint filed in the investigation.
>
> RESPONDENT agrees to give to B&S two copies of all catalogs, manuals, advertisements and promotional pieces promoting or making reference to surface grinding machines made by Lian

Feng Machine Co. that have been used, sold or distributed by RESPONDENT.

RESPONDENT shall deliver to B&S prior to March 27, 1981 in affidavit form a statement relating to RESPONDENT's purchase and sale of surface grinding machines made or sold by Lian Feng Machinery Co., including (a) the total number purchased; (b) the dates of purchase; (c) the price paid; (d) the total number in inventory; (e) the total number sold; (f) the price of each sale; (g) the date of each sale.

RESPONDENT shall deliver to B&S prior to March 27, 1981 all copies of catalogs, manuals and advertisements in its possession that were prepared by or for Lian Feng Machinery Co. that contain reference to surface grinding machines that are reproductions, copies, colorable imitations or simulations of B&S High Precision Surface Grinding Machines that have been sold under the designations 510, 612, 618, 824, 1024, 1030, 1244, and/or 1236.

B&S and the RESPONDENT agree to file a joint motion before the U.S. International Trade Commission to terminate the Investigation with respect to RESPONDENT without prejudice.

B&S agrees to refrain from instituting any civil action for any matter which have been raised in the complaint filed before the U.S. International Trade Commission.

B&S hereby releases the RESPONDENT from claims of copyright and trademark infringement and unfair competition arising from those issues raised in the B&S complaint filed in the Investigation.

WRITTEN COMMENTS REQUESTED: In order to discharge its statutory obligation to consider the public interest, the Commission seeks written comments from interested persons regarding the effects of terminating this investigation as to respondent Bob's Machinery Sales and Cassiere Machinery Company on the basis of the settlement arguments on (1) the public health and welfare, (2) competitive conditions in the U.S. economy, (3) the production of like or directly competitive articles in the United States, and (4) U.S. consumers. The Commission investigative attorney is specifically requested to make comments. All written comments must be filed with the Secretary to the Commission no later than 30 days after publication of this notice in the Federal Register. In addition, pursuant to 19 C.F.R. § 210.14(a)(2), the Commission has requested comments from the Department of Health and Human Services, the Department of Justice, the Federal Trade Commission, and the U.S. Customs Service.

ADDITIONAL INFORMATION: The original and 19 copies of all written submissions must be filed with the Secretary to the Commission, 701 E Street NW., Washington, D.C. 20436, telephone (202) 523–0161. All comments must be filed no later than 30 days after publication of this notice in the Federal Register. Any person desiring to submit a document (or portion thereof) to the Commission in confidence must request *in camera* treatment. Such requests should

be directed to the Secretary to the Commission and must include a full statement of the reasons the Commission should grant such treatment. The Commission will either accept the submission in confidence or return it. All nonconfidential written submissions will be available for public inspection at the Secretary's office.

FOR FURTHER INFORMATION CONTACT: Clarease E. Mitchell, Esq., Office of the General Counsel, U.S. International Trade Commission, 701 E Street NW., Washington, D.C. 20436; telephone (202) 523–0148.

By order of the Commission.

Issued: June 17, 1981.

KENNETH R. MASON,
Secretary.

Investigation No. 731–TA–44 (Preliminary)

Sorbitol From France

AGENCY: United States International Trade Commission

ACTION: Institution of preliminary antidumping investigation.

SUMMARY: The U.S. International Trade Commission hereby gives notice of the institution of investigation No. 731–TA–44 (Preliminary) to determine whether there is reasonable indication that an industry in the United States is materially injured, or is threatened with material injury, or the establishment of an industry in the United States is materially retarded, by reason of imports from France of sorbitol, provided for in item 493.68 of the Tariff Schedules of the United States, which is allegedly sold or likely to be sold in the United States at less than fair value (LTFV).

EFFECTIVE DATE: June 19, 1981.

FOR FURTHER INFORMATION CONTACT: Ms. Miriam Bishop, Office of Investigations, U.S. International Trade Commission, Room 350, 701 E Street NW., Washington, D.C. 20436; telephone 202–523–0291.

SUPPLEMENTARY INFORMATION: On June 15, 1981, petitions were simultaneously filed with the U.S. Department of Commerce and the U.S. International Trade Commission by Pfizer Inc. alleging that sorbitol from France is being sold in the United States at LTFV and that an industry in the United States is being materially injured or threatened with material injury by reason of such imports. Accordingly, pursuant to section 733(a) of the Tariff Act of 1930 (19 U.S.C. 1673b(a)), the Commission is instituting preliminary antidumping investigation No. 731–TA–44 (Preliminary) to determine whether a

reasonable indication of such injury exists. The Commission must make its determination within 45 days after the date on which the petition was received, or in this case by July 30, 1981. The investigation will be conducted according to the provisions of part 207, subpart B, of the Commission's Rules of Practice and Procedure (19 CFR 207).

WRITTEN SUBMISSIONS: Any person may submit to the Commission a written statement of information pertinent to the subject of the investigation. A signed original and nineteen (19) true copies of each submission must be filed at the Office of the Secretary, U.S. International Trade Commission Building, 701 E Street, NW., Washington, D.C. 20436, on or before July 16, 1981. All written submissions except for confidential business data will be available for public inspection.

Any business information for which confidential treatment is desired shall be submitted separately. The envelope and all pages of such submissions must be clearly labeled "Confidential Business Information." Confidential submissions and requests for confidential treatment must conform with the requirements of section 201.6 of the Commission's Rules of Practice and Procedure (19 CFR 201.6).

For further information concerning the conduct of the investigation and rules of general application, consult the Commission's Rules of Practice and Procedure, part 207, subparts A and B (19 CFR 207), and part 201, subparts A through E (19 CFR 201).

CONFERENCE: The Director of Operations of the Commission has scheduled a conference in connection with this investigation for 10 a.m., e.d.t., on Monday, July 13, 1981, at the U.S. International Trade Commission Building. Parties wishing to participate in the conference should contact the investigator for this investigation, Ms. Miriam Bishop (202–523–0291). It is anticipated that parties in support of the petition for the imposition of antidumping duties and parties opposed to such petition will each be collectively allocated one (1) hour within which to make an oral presentation at the conference. Further details concerning the conduct of the conference will be provided by the investigator.

INSPECTION OF THE PETITION: The petition filed in this case is available for public inspection at the Office of the Secretary, U.S. International Trade Commission.

This notice is published pursuant to section 207.12 of the Commission's Rules of Practice and Procedure (19 CFR 207.12).

By order of the Commission.

Issued: June 19, 1981.

KENNETH R. MASON,
Secretary.

Index

U.S. Customs Service

Treasury Decisions:	T.D. No.
Consolidated Aircraft Bond	81-171
Cotton, Manmade Fiber Textile Products/Restriction on Entry/India	81-177
Cotton Textile Products/Restriction on Entry/Macau	81-175
Cotton, Wool, and Manmade Fiber Textile Products/Restriction on Entry/Macau	81-176
Foreign Currencies:	
Variances From Quarterly Rate: June 1-5, 1981	81-172
Variances From Quarterly Rate: June 8-12, 1981	81-174
Tariff-Rate Quota—Tuna Fish	81-173
Decisions of the United States Court of Customs and Patent Appeals:	C.A.D. No.
Carlingswitch, Inc. v. *The United States*	1264
Way Distributors, Inc. v. *The United States*	1265

U.S. GOVERNMENT PRINTING OFFICE : 1981 O - 349-002

DEPARTMENT OF THE TREASURY
U.S. CUSTOMS SERVICE
WASHINGTON, D.C. 20229

OFFICIAL BUSINESS
PENALTY FOR PRIVATE USE, $300

POSTAGE AND FEES PAID
DEPARTMENT OF THE TREASURY (CUSTOMS)
(TREAS. 552)

15/28

Customs Bulletin

Regulations, Rulings, Decisions, and Notices concerning Customs and related matters

and Decisions

of the United States Court of Customs and Patent Appeals and the United States Court of International Trade

Vol. 15 JULY 15, 1981 No. 28

NEWARK PUBLIC LIBRARY

AUG - 4 1981

U. S. GOVT. PUBS.
DEPOSITORY 376

This issue contains

T.D. 81-178
General Notice
C.A.D. 1266
Slip. Op. 81-53 Through 81-56
International Trade Commission Notice

THE DEPARTMENT OF THE TREASURY
U.S. Customs Service

T 1.11/3:

NOTICE

The abstracts, rulings, and notices which are issued weekly by the U.S. Customs Service are subject to correction for typographical or other printing errors. Users may notify the U.S. Customs Service, Logistics Management Division, Washington, D.C. 20229, of any such errors in order that corrections may be made before the bound volumes are published.

For sale by the Superintendent of Documents, U.S. Government Printing Office, Washington, D.C. 20402. Price: $2.25 (single copy domestic); $2.85 (single copy foreign). Subscription price: $85.00 a year domestic; $106.25 a year foreign.

U.S. Customs Service

Treasury Decisions

(T.D. 81-178)

Foreign Currencies—Variances From Quarterly Rate

The following rates of exchange are based upon rates certified to the Secretary of the Treasury by the Federal Reserve Bank of New York, pursuant to Section 522(C), Tariff Act of 1930, as amended (31 U.S.C. 372(c)), and reflect variances of 5 per centum or more from the quarterly rate published in Treasury Decision 81-82 for the following countries. Therefore, as to entries covering merchandise exported on the dates listed, whenever it is necessary for Customs purposes to convert such currency into currency of the United States, conversion shall be at the following rates.

Austria schilling:	
June 15, 1981	$0.059773
June 16, 1981	.060496
June 17, 1981	.060386
June 18, 1981	.059809
June 19, 1981	.059277
Belgium franc:	
June 15, 1981	$0.025961
June 16, 1981	.026137
June 17, 1981	.026110
June 18, 1981	.025773
June 19, 1981	.025694
Brazil cruziero:	
June 15-16, 1981	$0.011346
June 17-19, 1981	.011151
People's Republic of China yuan:	
June 15, 1981	$0.564207
June 16-18, 1981	.571037
June 19, 1981	.568214

Denmark krone:	
June 15, 1981	$0. 135318
June 16, 1981	. 135980
June 17, 1981	. 135474
June 18, 1981	. 134935
June 19, 1981	. 134093
Finland markka:	
June 15, 1981	$0. 225225
June 16, 1981	. 226860
June 17, 1981	. 226912
June 18, 1981	. 225378
June 19, 1981	. 224090
France franc:	
June 15, 1981	$0. 178476
June 16, 1981	. 179340
June 17, 1981	. 179179
June 18, 1981	. 176678
June 19, 1981	. 177384
Germany deutches mark:	
June 15, 1981	$0. 426257
June 16, 1981	. 425985
June 17, 1981	. 425767
June 18, 1981	. 421550
June 19, 1981	. 420610
Ireland pound:	
June 15, 1981	$1. 5460
June 16, 1981	1. 5500
June 17, 1981	1. 5575
June 18, 1981	1. 5430
June 19, 1981	1. 5310
Italy lira:	
June 15, 1981	$0. 000855
June 16, 1981	. 000853
June 17, 1981	. 000856
June 18, 1981	. 000848
June 19, 1981	. 000843
Netherlands guilder:	
June 15, 1981	$0. 382995
June 16, 1981	. 384615
June 17, 1981	. 383289
June 18, 1981	. 379867
June 19, 1981	. 378358

New Zealand dollar:	
June 15, 1981	$0.8635
June 16, 1981	.8660
June 17, 1981	.8620
June 18, 1981	.8600
June 19, 1981	.8556
Norway krone:	
June 15, 1981	$0.170794
June 16, 1981	.170853
June 17, 1981	.170721
June 18, 1981	.169420
June 19, 1981	.168464
Portugal escudo:	
June 15, 1981	$0.015911
June 16, 1981	.016013
June 17, 1981	.016598
June 18, 1981	.015974
June 19, 1981	.015810
Republic of South Africa rand:	
June 15, 1981	$1.1605
June 16, 1981	1.1617
June 17, 1981	1.1580
June 18, 1981	1.1535
June 19, 1981	1.1510
Spain peseta:	
June 15, 1981	$0.010592
June 16, 1981	.010678
June 17, 1981	.010689
June 18, 1981	.010610
June 19, 1981	.010499
Sweden krone:	
June 15, 1981	$0.200000
June 16, 1981	.198906
June 17, 1981	.199402
June 18, 1981	.198570
June 19, 1981	.198216
Switzerland franc:	
June 15, 1981	$0.489117
June 16, 1981	.487686
June 17, 1981	.488281
June 18, 1981	.482625
June 19, 1981	.483559

United Kingdom pound:

June 15, 1981	$2.0020
June 16, 1981	1.9948
June 17, 1981	1.9970
June 18, 1981	1.9760
June 19, 1981	1.9720

(LIQ-03-01 O:C:E)

Date: June 19, 1981.

KENNETH A. RICH,
Chief,
Customs Information Exchange.

Correction Notice

(19 CFR Parts 103, 152, 175)

Customs Regulations Relating to Availability of Information; Correction

AGENCY: U.S. Customs Service, Department of the Treasury.

ACTION: Final rule; correction.

SUMMARY: This document corrects the text of a final rule on the Customs Regulations relating to the availability of information that was published as T.D. 81-168 in the Federal Register on June 24, 1981 (46 FR 32564).

FOR FURTHER INFORMATION CONTACT: Steven I. Pinter, Disclosure Law Branch (202-566-8681).

The following corrections are made in the final rule document:

1. On page 32566, center column, the address of public reading room in Region V—New Orleans, is corrected to read "Room 302, 423 Canal Street, New Orleans, Louisiana 70130."

2. On page 32567, right-hand column, section 103.5(b)(1), the name "Freedom of Information and Privacy Branch" is corrected to read "Disclosure Law Branch."

3. On page 32570, left-hand column, section 103.8(a)(3) is corrected to read "The need for consultation, * * *, or within offices of the United States Customs Service * * *"

Dated: June 30, 1981.

B. J. FRITZ
Director, Regulations Control
and Disclosure Law Division.

[Published in the Federal Register July 7, 1981 (46 F.R. 35084)]

General Notice

U.S. Customs Service

(19 CFR Part 12)

Proposed Customs Regulations Amendments Relating to the Importation of Certain Fresh, Chilled, or Frozen Beef

AGENCY: U.S. Customs Service, Department of the Treasury.

ACTION: Proposed rule.

SUMMARY: The Trade Agreements Act of 1979 made numerous changes to various provisions of law presently administered in whole or in part by the Customs Service. One of those changes relates to the importation of certain fresh, chilled, or frozen beef. This document proposes to add a new section to the Customs Regulations to require a certification, by an official of the exporting country, stating that certain fresh, chilled, or frozen beef meets U.S. Department of Agriculture specifications for high-quality beef.

DATES: August 8, 1981.

ADDRESS: Written comments should be addressed to the Commissioner of Customs, Attention: Regulations and Information Division, U.S. Customs Service, 1301 Constitution Avenue NW., Room 2426, Washington, D.C. 20229.

FOR FURTHER INFORMATION CONTACT: Harrison C. Feese, Duty Assessment Division, Office of Trade Operations, U.S. Customs Service, 1301 Constitution Avenue NW., Washington, D.C. 20229 (202–566–8651).

SUPPLEMENTARY INFORMATION:

BACKGROUND

The Trade Agreements Act of 1979, Pub. L. 96–39, 93 Stat. 144 (the "Act") made numerous changes to various provisions of law administered in whole or in part by the Customs Service.

Title V of the Act provides for the implementation of certain tariff concessions negotiated in the Multilateral Trade Negotiations ("MTN"). Section 506 of Title V amended Schedule 1, part 2, sub-

part B, Tariff Schedules of the United States ("TSUS"), by deleting item 107.60 and inserting items 107.61, 107.62, and 107.63, relating to certain fresh, chilled, or frozen beef.

Prior to the Act, fresh, chilled, or frozen beef and veal (except for sausages) valued over 30 cents per pound were classified under TSUS item 107.60. The rate of duty was 10 percent ad valorem. Before the Act, portion control cuts from Canada were entered under TSUS item 107.60, which was not covered by the Meat Import Act (Pub. L. 88–482, 19 U.S.C. 1202). Section 506 of the Act created a separate tariff classification for portion control cuts meeting high-quality U.S. specifications. Section 704 of the Act includes this new tariff classification in the coverage of the Meat Import Act.

In bilateral negotiations with Canada, the United States agreed to reduce the duty on high-quality portion control cuts of beef from 10 percent to 4 percent ad valorem on condition that (1) the concession apply only to portion control cuts which meet high-quality specifications (7 CFR 2853.106 (a) and (b)) and (2) meat entering under the concession would be counted against the exporter's allocation under the U.S. Meat Import Program.

Under the provisions of new TSUS item 107.61, a certification is required from an official of the exporting country prior to exportation stating that the fresh, chilled, or frozen beef meets the specifications for high-quality beef contained in regulations issued by the U.S. Department of Agriculture (7 CFR 2853.106 (a) and (b)). The certification is to be in a form required by regulations issued by the Secretary of the Treasury after consultation with the Secretary of Agriculture. This proposal was developed as a result of meetings between personnel of Customs and the Department of Agriculture.

This document proposes to amend Part 12, Customs Regulations (19 CFR Part 12), by adding a new section 12.9a to require a certification, prior to exportation, by an official of the exporting country, stating that the beef meets U.S. Department of Agriculture specifications for high-quality beef (7 CFR 2853.106 (a) and (b)). The requirements of the proposed section would be in addition to those requirements contained in U.S. Department of Agriculture regulations in 9 CFR 327.4 relating to meat inspection certifications.

AUTHORITY

These amendments are proposed under the authority of R.S. 251, as amended (19 U.S.C. 66); section 624, 46 Stat. 759 (19 U.S.C. 1624); Pub. L. 96–39, 93 Stat. 252.

COMMENTS

Before adopting this proposal, consideration will be given to any written comments, preferably in triplicate, that are submitted timely to the Commissioner of Customs. Comments submitted will be avail-

able for public inspection in accordance with section 103.8(b), Customs Regulations (19 CFR 103.8(b)), on regular business days between the hours of 9:00 a.m. to 4:30 p.m. at the Regulations and Information Division, Headquarters, U.S. Customs Service, 1301 Constitution Avenue NW., Room 2426, Washington, D.C. 20229.

DRAFTING INFORMATION

The principal author of this document was John E. Elkins, Regulations and Information Division, Office of Regulations and Rulings, U.S. Customs Service. However, personnel from other Customs offices participated in its development.

EXECUTIVE ORDER 12291

The proposed regulation is not a major regulation as defined in section 1(b) of E.O. 12291. Accordingly, a regulatory impact analysis is not required.

REGULATORY FLEXIBILITY ACT

The provisions of the Regulatory Flexibility Act relating to an initial and final regulatory flexibility analysis (5 U.S.C. 603, 604) are not applicable to this proposal because the rule, if promulgated, will not have a significant economic impact on a substantial number of small entities. Any economic impact flows directly from the Trade Agreements Act of 1979 and not the proposed implementing regulations. The proposal is not expected to: have significant secondary or incidental effects on a substantial number of small entities; impose, or otherwise cause, a significant increase in the reporting, recordkeeping, or other compliance burdens on a substantial number of small entities; or generate significant interest or attention from entities through comments, either formal or informal.

Accordingly, it is hereby certified under the provisions of section 3 of the Regulatory Flexibility Act (5 U.S.C. 605b) that the rule, if promulgated, will not have a significant economic impact on a substantial number of small entities.

PROPOSED AMENDMENTS

It is proposed to amend Part 12, Customs Regulations (19 CFR Part 12), in the following manner:

PART 12—SPECIAL CLASSES OF MERCHANDISE

It is proposed to amend Part 12 by adding a new section 12.9a and heading to read as follows:

CERTAIN FRESH, CHILLED, OR FROZEN BEEF

12.9a CERTIFICATION.

The foreign official's meat-inspection certificate required by U.S. Department of Agriculture regulations (9 CFR 327.4) shall be mod-

ified to include the following certification when fresh, chilled, or frozen beef is to be entered under the provisions of item 107.61, Tariff Schedules of the United States (TSUS). The certification shall be made, prior to exportation of the beef, by an official of the government of the exporting country. The requirements of this section shall be in addition to those requirements contained in 9 CFR 327.4. Appropriate officials of the exporting country should consult with the U.S. Department of Agriculture as to the beef grades or standards within their country that satisfy the certification requirement. Exporters or importers of beef to be entered under the provisions of item 107.61, TSUS, should consult with the U.S. Department of Agriculture prior to exportation in order to insure that the beef will satisfy the certification requirements. This certification is relevant only to U.S. Customs tariff classification and is not applicable to marketing of beef under U.S. Department of Agriculture grading standards, a matter within U.S. Department of Agriculture's jurisdiction.

CERTIFICATION

I hereby certify to the best of my knowledge and belief that the herein described fresh, chilled, or frozen beef, meets the specifications for high-quality beef prescribed in regulations issued by the U.S. Department of Agriculture (7 CFR 2853.106 (a) and (b)).

WILLIAM T. ARCHEY,
Acting Commissioner of Customs.

Approved: June 25, 1981.
JOHN P. SIMPSON,
Acting Assistant Secretary of the Treasury.

[Published in the Federal Register July 2, 1981 (46 F.R. 34598)]

Decisions of the United States Court of Customs and Patent Appeals

(C.A.D. 1266)

THE UNITED STATES *v.* SIEMENS AMERICA, INC., AND SIEMENS CORPORATION

1. CLASSIFICATION—SURGE VOLTAGE PROTECTORS.

Judgment of United States Customs Court (now United States Court of International Trade) that imported surge voltage protectors (SVPs) containing promethium 147 were not classifiable under item 709.66, TSUS, as "apparatus based on the use of radiations from radioactive substances" is affirmed.

2. ID.—ELECTRONIC TUBES.

Judgment of court below that imported SVPs were properly classifiable under item 687.60, TSUS, as "electronic tubes" is reversed and this matter is remanded for further action consistent with this opinion.

3. LEGISLATIVE INTENT.

To determine legislative intent, one must first look to statutory language itself.

4. ID.

Plain meaning of "based on" language of item 709.66 evinces Congressional intent to limit that provision to goods in which use of radiation is a fundamental and essential constituent.

5. FINDINGS OF FACT.

Finding of fact of court below will not be disturbed unless the finding is clearly contrary to weight of evidence.

6. "EO NOMINE" PROVISION.

Imported SVPs come within common meaning of *eo nomine* provision for "electronic tubes" in item 687.60 as set forth by lower court.

7. ID.

Imported SVPs are described under item 685.90 as "apparatus * * * for the protection of electrical circuits."

8. RELATIVE SPECIFICITY.

Concerning issue of relative specificity between two competing TSUS items, the provision that more specifically describes the imported merchandise is the item having requirements which are more difficult to satisfy.

9. ID.

SVPs are described in item 685.90, TSUS, by their specific and only use (circuit protection); whereas, item 687.60 (electronic tubes) is not limited to any specific use requirement. Item 685.90 is more restrictive and difficult to satisfy; accordingly, SVPs are more specifically described in item 685.90.

10. ID. STATUTORY CONSTRUCTION.

In absence of legislative intent to the contrary, a product de-described by both a use provision and an *eo nomine* provision is generally more specifically provided for under the use provision. However, there is no requirement that this aid to statutory construction be automatically applied.

11. ISSUES OF UNIFORM PRACTICE AND RULE OF "STARE DECISIS" MUST BE DECIDED BY COURT OF INTERNATIONAL TRADE.

Two issues raised below but not reached, one concerning an alleged improper change in established and uniform practice regarding duty rate for SVPs and the other concerning *stare decisis*, must be decided by the lower court before they are reviewable here. Thus this matter is remanded.

UNITED STATES, APPELLANT *v.* SIEMENS AMERICA, INC, AND SIEMENS CORPORATION, APPELLEES

Appeal No. 80-33

SIEMENS AMERICA, INC, AND SEIMENS CORPORATION, APPELLANTS *v.* UNITED STATES, APPELLEE

Appeal No. 80-35

United States Court of Customs and Patent Appeals, June 25, 1981

Appeal from United States Customs Court, C.D. 4856

[Modified and Remanded]

Thomas S. Martin, Acting Asst. Atty. General, *David M. Cohen*, Director, *Joseph I. Liebman*, Attorney in charge, *Madeline B. Kuflik* attorneys for United States.

Louis Schneider, Angela Pitsaris, attorneys for Siemens.

[Oral argument on March 2, 1981 by *Madeline B. Kuflik* for United States and *Louis Schneider* for Siemens.]

Before MARKEY, *Chief Judge*, RICH, BALDWIN, MILLER, and NIES, *Associate Judges*.

BALDWIN, *Judge.*

This matter is before us on appeal by The United States (Government) and cross-appeal by Siemens America, Inc. and Siemens Corporation (collectively, Siemens) from the judgment of the United States Customs Court, now the United States Court of International Trade (court), 84 Cust. Ct., C.D. 4856, 496 F. Supp. 266 (1980). [1–2] The court held that all the imported merchandise, known as surge voltage protectors [1] (SVP), was improperly classified as "other electrical apparatus for the protection of electrical circuits" under item 385.90 of the Tariff Schedules of the United States (TSUS) and sustained Siemens' alternative claim for classification as "electronic tubes" under item 687.60, TSUS. The court also held that the SVPs containing Pm147 were not classifiable under item 709.66, TSUS, as "apparatus based on the use of radiations from radioactive substances," the provision Siemens had primarily claimed to be applicable. The rejection of classification under item 709.66 is the subject of Siemen's cross-appeal. We affirm the judgment of the court dismissing Siemens' claim under item 709.66, reverse the judgment of the court holding the SVPs properly dutiable under item 687.60, and remand this matter for further action consistent with this opinion.

Relevant Statutes; Customs Service Classification

SCHEDULE 6.—METALS AND METAL PRODUCTS

Part 5.—Electrical Machinery and Equipment

*	* * * * * * *	
685.90	Electrical switches, relays, fuses, lightning arresters, plugs, receptacles, lamp sockets, terminals, terminal strips, junction boxes and other electrical apparatus for making or breaking electrical circuits; for the protection of electrical circuits, or for making connections to or in electrical circuits, switchboards (except telephone switchboards) and control panels; all the foregoing and parts thereof----------	14, 12, 10, or 8% ad val depending on year of entry

[1] Some of the imported SVPs contained the radioactive substance promethium 147 (Pm147).

349-003 0 - 81 - 3

Siemens' Claim

SCHEDULE 7.—SPECIFIED PRODUCTS; MISCELLANEOUS AND NONENUMERATED PRODUCTS

Part 2.—Optical Goods; Scientific and Professional Instruments; Watches; Clocks, and Timing Devices; Photographic Goods; Motion Pictures; Recordings and Recording Media

* * * * * * *

Subpart B.—Medical and Surgical Instruments and Apparatus; X-Ray Apparatus

* * * * * * *

Apparatus based on the use of X-rays or of the radiations from radioactive substances, whether for medical, industrial, or other uses, and parts thereof:

* * * * * * *

709.66	Apparatus based on the use of radiations from radioactive substances, and parts thereof	9.5, 8, 7, or 6% ad val depending on year of entry

Siemens' Alternative Claim

SCHEDULE 6.—METALS AND METAL PRODUCTS

Part 5.—Electrical Machinery and Equipment

* * * * * * *

Electronic tubes (except x-ray tubes); photocells; transistors and other related electronic crystal components; mounted piezo-electric crystals; all the foregoing and parts thereof:

* * * * * * *

687.60	Other	10, 8.5, 7, or 6% ad val. depending on year of entry

* * * * * * *

Part 5 headnotes:

1. This part does not cover—

* * * * * * *

(iv) electrical instruments and apparatus provided for in schedule 7.

BACKGROUND

The SVPs in issue are gas discharge tubes consisting of a hermetically sealed glass insulator filled with argon in which two electrodes are spacially set apart. Some of the imported SVPs contain a minute quantity of Pm147 within the glass insulator. To protect electrical circuitry from damage and to protect against injury to personnel, SVPs provide a conductive path for unwanted and excessive surges of voltage caused by lightning, powerline shorts and other sources.

At a specific voltage level known as the "breakdown voltage," SVPs will switch from a nonconductive state to a conductive state quite rapidly when subjected to an excessive voltage transient. Conduction occurs when the argon within the tube becomes ionized.

In the imported SVPs containing Pm147, the radioactive material emits radiation in the form of beta particles which preionizes or facilitates ionization of the argon thus stabilizing the breakdown voltage and increasing the speed of ionization. The breakdown voltage itself is a design parameter controlled primarily by the electrode spacing and gas fill pressure of the SVPs.

According to the court below, the record clearly established that the SVPs are used for the protection of electrical circuits and are described in item 685.90 as classified by the Customs Service (Customs). However, in accordance with headnote 1 (vi) of Schedule 6, Part 5, supra, classification under item 685.90 is precluded if the SVPs with Pm147 are described in item 709.66 as claimed by Siemens. The court stated that the "based on" language in item 709.66 evinced a "Congressional intent to embrace merchandise in which radiation from radioactive substances is its *sine qua non*." 496 F. Supp. at 269. From the evidence presented, the court found that the SVP's over-voltage protection function is not based upon the use of radioactive material, that the SVPs' argon ionizes irrespective of the presence of Pm147, that the speed of ionization and a specific breakdown voltage is achievable without the use of radioactive substances, and that the breakdown voltage is controlled by factors other than the presence of radiation. The court concluded that the inclusion of Pm147 in the SVPs was not essential to their basic function, that Pm147 was not a fundamental and essential constituent of the SVPs, and, therefore, that radiation is not the *sine qua non* of the SVPs in issue. Accordingly, item 709.66 did not describe the SVPs containing Pm147.

Siemens argues that since Pm147 serves to stabilize the SVP's breakdown voltage and since the breakdown voltage is an important SVP specification, the radiation from Pm147 in a SVP is an essential and fundamental determinant of SVP characteristics. Continuing, Siemens argues that the plain meaning of the words "based on" indicates that it is unnecessary that the sole characteristic of an apparatus derives from the radiation and that it is only necessary that the radiation be the underlying "basis" on which the apparatus is dependent which, according to Siemens, is clearly the case with its SVPs containing Pm147.

Concerning whether the SVPs are described in item 687.60, the court construed the statutory language of the *eo nomine* provision for "electronic tubes" in accordance with its common meaning. According to certain technical lexicographic authorities relied upon by the court, an "electron tube"[2] is defined in terms of rudimentary but essential features; i.e., an airtight enclosure, evacuated or gas-filled, providing a medium for the flow and conduction of electrons between two electrodes. Since the SVPs satisfied those basic criteria, the tubes are described in item 687.60. Additionally, the court found that the SVPs are "cold cathode tubes" which by definition are electron tubes.

The Government maintains that the common meaning definition of the term "electronic tube" used by the lower court is incomplete and, while describing the basic physical tube components, fails to include the unique functions for which electronic tubes were developed and for which they are known. The Government argues that the function of electronic tubes is based upon the controlled flow of electrons which enables electronic tubes to assist in the performance of various functions such as amplification, conversion of alternating current to direct current, detection, rectification, and the like; therefore, the definition of electronic tubes, according to the Government, must reflect the tube characteristic of ability to control the flow of electrons and various functions performed by various electronic tubes.

Next the court considered the relative specificity of items 685.90 and 687.60 in accordance with General Interpretative Rule 10(c), TSUS,[3] since both items describe the SVPs in issue. According to the court, the provision that more specifically describes the SVPs is the item having requirements which are more difficult to satisfy and that

---

[2] The parties to this appeal do not dispute that the term "electronic tube" is synonomous with the term "electron tube."

[3] Rule 10(c) states in pertinent part that "an imported article which is described in two or more provisions of the schedules is classifiable in the provision which most specifically describes it."

item is the *eo nomine* provision for electronic tubes since electronic tubes are "essentially one kind of device" (even though they perform a variety of functions) and circuit protector apparatus are "comprised of a number of highly diverse devices" which perform different functions in circuit protection and which have no common physical criteria.

The Government contends that the court erred in finding item 687.60 more specific than item 685.90 arguing that the court failed to apply a general rule of customs jurisprudence that goods described by both a use provision and an *eo nomine* provision are more specifically provided for under the use provision unless there is a clearly expressed legislative intent to the contrary. Under the application of that rule, item 685.90 ("other electrical apparatus for the protection of electrical circuits"), a use provision, is more specific than the *eo nomine* provision for "electronic tubes" (item 687.70).

The Government also argues that the court apparently determined relative specificity by merely counting the number of items of merchandise which are encompassed by the competing provisions and that this is an improper test. The proper test, according to the Government, is which provision is more specific with respect to the imported article irrespective of the number of articles comprehended by the competing provisions, and the more specific provision is the one having requirements which are more difficult to satisfy.

Since the court agreed with Siemens that item 687.60 is the applicable classification over item 685.90, it found no need to address two additional issues raised by Siemens, i.e., the SVPs were properly classifiable under item 687.60 since (1) there was an established and uniform practice by Customs of classifying SVPs under that provision which was changed without requisite notice in contravention of 19 U.S.C. 1315(d);[4] and (2) three "abstract" decisions of the court held the SVPs dutiable under item 687.60 rather than item 685.90 and the doctrine of *stare decisis* controls.

OPINION

The Item 709.66 Issue

[3] It is axiomatic that a statute must be construed to carry out legislative intent. To determine that intent, one must first look to the statutory language itself. See, *Intercontinental Fibers, Inc.* v. *United States*, 64 CCPA 31, C.A.D. 1179, 545 F. 2d 744 (1976). **[4]**

---

[4] § 1315(d) provides: "No administrative ruling resulting in the imposition of a higher rate of duty or charge than the Secretary of the Treasury shall find to have been applicable to imported merchandise under an established and uniform practice shall be effective with respect to articles entered for consumption or withdrawn from warehouse for consumption prior to the expiration of thirty days after the date of publication in the weekly Treasury Decisions of notice of such ruling; but this provision shall not apply with respect to the imposition of antidumping duties or the imposition of countervailing duties under section 1303 of this title."

Doing so, we agree with the court below that the plain meaning of the "based on" language of item 709.66 evinces Congressional intent to limit the provision to goods in which the use of radiation is a fundamental and essential constituent. The use of radiation must be an indispensable requisite for the apparatus which, however, does not mean that the apparatus must be based solely on the use of radiation.

Thus, the issue here becomes whether or not the use of radiation from Pm147 in the imported SVPs containing such radioactive material is a fundamental and essential constituent of the SVPs.

The court below found as matters of fact that Pm147 is not a fundamental and essential consituent of the SVPs and that Pm147 radiation is not the *sine qua non* of the SVPs in issue. [5] A finding of fact of the court below will not be disturbed unless the finding is clearly contrary to the weight of the evidence. *Pharmacia Laboratories, Inc.* v. *United States*, 67 CCPA, C.A.D. 1236, 609 F. 2d 491 (1979). A review of the evidence of record clearly supports the findings concerning the role of Pm147 and its radiation in the operation of the SVPs. Siemens has not persuaded us otherwise.

The specific function of the SVPs is to provide a conductive path for excessive voltage transients. This function is determined by physical characteristics of the SVPs other than radiation from radioactive substances. Ionization and thus conduction occur regardless of the presence of radiation. The breakdown voltage is determined primarily by electrode spacing and gas fill pressure. The Pm147 radiations do not determine this breakdown voltage; the radiations merely help to stabilize it and increase the speed of ionization. In fact, some of the SVPs imported by Siemens contain no radioactive material. Thus we cannot agree with Siemens' argument that the Pm147 radiation is the "underlying basis" on which the SVP is dependent. Accordingly, we agree with the lower court that "it would require a substantial magnification of the role played by the promethium 147 to find that the SVP tubes are 'based on the use of radiations from radioactive substances,' within the purview of the statute." Therefore, we affirm the judgment of the court concerning the item 709.66 issue brought here on cross-appeal by Siemens.

The Item 687.60 Issue

[6] We agree with the lower court's determination of the common meaning of the *eo nomine* provision for "electronic tubes" in item 687.60 and that SVPs fall within that definition and, thus, within item 687.60. Finding no error in the court's disposition of the item

687.60 issue, we adopt that portion of the court's opinion, i.e., Section II, as our own.

The additional criteria desired by the Government require the definition of the term "electronic tube" to include not only electron flow control but also a limitation so that only those electronic devices which the ability to assist in various functions such as amplification, rectification, conversion, or the like and meet the basic physical configuration are encompassed by item 687.60 as electronic tubes. Such limitations are too restrictive and uncalled for in light of the technical authorities relied upon by the court below in determining the common meaning of the term "electronic tube."

The Relative Specificity Issue

[7] Since all the imported SVPs are described both under item 685.90 as "apparatus * * * for the protection of electrical circuits" and under item 687.60 as "electronic tubes," the issue of the relative specificity of the two competing provisions, as in the court below, must be reached.

[8] In accordance with General Interpretative Rule 10(c), supra note 3, the issue is which of the two competing provisions "most specifically describes" the SVPs. As this court has stated previously, and as the court below properly stated, the provision that more specifically describes the SVPs is the item having requirements which are "more difficult to satisfy." *Ozen Sound Devices* v. *United States*, 67 CCPA C.A.D. 1246, 620 F. 2d 880, 883 (1980).

Stating that *United States* v. *Ampex Corp.*, 59 CCPA 134, C.A.D. 1054, 460 F. 2d 1086 (1972) was "somewhat analogous"[5] and finding that electronic tubes are "essentially one kind of device" whereas apparatus for the protection of electrical circuits comprises "a number of highly diverse devices," the lower court determined that the "electronic tube" provision was "undoubtedly more restrictive and 'difficult to satisfy.' " *Siemens America*, 496 F. Supp. at 272. We disagree with that determination.

The SVPs are described in item 685.90 by their specific and only use, i.e., circuit protection. Item 687.60 is not limited to any such specific use requirement. Comparing the two competing provisions, both of which are quite broad in their reach, it is clear that the use provision, item 685.90, is "undoubtedly more restrictive and 'difficult to satisfy.' " Therefore, the SVPs are more specifically described in item 685.90.

---

[5] While concerned with the issue of relative specificity, the *Ampex* case is of no assistance here since it did not involve an *eo nomine* provision in competition with a use provision. Additionally, the goods described in the more specific provision of *Ampex* (insulated electrical conductors) performed only one function, i.e., conveyance of electricity from one locus to another; whereas here the goods described in the lower court's more specific provision (electronic tubes) perform a "variety of functions."

Our conclusion concerning the relative specificity of the two competing provisions is supported by the general rule of construction that, in the absence of legislative intent to the contrary, a product described by both a use provision and an *eo nomine* provision is *generally* more specifically provided for under the use provision.[6] *Travenol Laboratories, Inc.* v. *United States*, 67 CCPA, C.A.D. 1247, 622 F. 2d 1027 (1980); cf. *United States* v. *Simon Saw & Steel Co.*, 51 CCPA 33, C.A.D. 834 (1964) (recognizing the general rule but finding the *eo nomine* provision in question to be more specific). In accordance with the construction aid, the SVPs in issue generally will be more specifically provided for under the use provision of item 685.90 as "other electrical apparatus * * * for the protection of electrical circuits" than under the *eo nomine* provision of item 687.60 as "electronic tubes."

Other Issues

Siemens had raised two additional issues in the court below, one concerning an alleged improper change in established and uniform practice regarding the duty rate to be applied to the SVPs and the other concerning *stare decisis*. Since the court agreed with Siemens that item 687.60 embraces the SVPs and is more specific than item 685.90, it found no need to reach these issues. However, we have disagreed with the court below by finding item 685.90 more specific than item 687.60. Therefore, these two additional issues need to be reached below before they are properly reviewable here. Thus, we remand this matter to the lower court for consideration of the two additional issues.

SUMMARY

We hold that the SVPs containing Pm147 are not classifiable under item 709.66 as "apparatus based on the use of radiations from radioactive substances." We also hold that although all the SVPs are "electronic tubes" within the meaning of item 687.60, item 685.90 ("other electrical apparatus * * * for the protection of electrical circuits") describes all the SVPs in issue more specifically than item 687.60. Accordingly, we *affirm* the judgment of the court below dismissing Siemens' claim under item 709.66 (Appeal No. 80–35); and we *reverse* the court's judgment holding the SVPs properly dutiable under item 687.60 (Appeal No. 80–33) and *remand* to the U.S. Court of International Trade for further action consistent with this opinion.

---

[6] There is no requirement that this aid to statutory construction be *automatically* applied when one of the competing provisions is a use provision and the other an *eo nomine* provision. The aid is merely "*a convenient rule of thumb for resolving issues where the competing provisions are otherwise in balance.*" *Simon Saw & Steel Co.*, 51 CCPA 33, 40, C.A.D. 834 (1964) (emphasis in original). Thus the fact that the lower court did not automatically apply the rule is not reversible error *in and of itself* as the Government maintains.

UNITED STATES, APPELLANT *v.* SIEMENS AMERICA, INC. AND SIEMENS CORPORATION, APPELLEES

Appeal No. 80-33
C.A.D. No. 1266

SIEMENS AMERICA, INC. AND SIEMENS CORPORATION, APPELLANTS *v.* UNITED STATES, APPELLEE

Appeal No. 80-35
C.A.D. No. 1266

Before MARKEY, *Chief Judge*, RICH, BALDWIN, MILLER, and NIES, *Associate Judges*.

NIES, *Judge*, with whom MARKEY, *Chief Judge*, joins, dissenting-in-part.

I disagree with the majority only respecting the relative specificity of items 687.60 and 685.90. Admittedly, this case presents a close question, but I see no error in the reasoning of the court below that it is more difficult to satisfy the requirements of a single kind of device (an electron tube) than it is to satisfy the requirements of *any one* of many different kinds of devices (fuses, circuit breakers, lightning arresters, insulators, transformers, carbon block assemblies, carbon arresters, gas tubes, neon bulbs, Zener diodes, varistors, selenium rectifiers, and so forth), especially considering that such highly diverse devices function differently and have no common physical criteria.

Since the *eo nomine* provision in item 687.60 for electronic tubes is more difficult to satisfy than the general catch-all, basket-like provision in item 685.90 covering "other electrical apparatus * * * for the protection of electrical circuits," the construction aid that a use provision is *generally* more specific than an *eo nomine* provision need not be used.

Accordingly, I would affirm the judgment of the Court of International Trade in its entirety.

349-003 0 - 81 - 4

United States Court of International Trade

One Federal Plaza
New York, N.Y. 10007

Chief Judge

Edward D. Re

Judges

Paul P. Rao
Morgan Ford
Scovel Richardson
Frederick Landis
James L. Watson
Herbert N. Maletz
Bernard Newman
Nils A. Boe

Senior Judge

Samuel M. Rosenstein

Clerk

Joseph E. Lombardi

Decisions of the United States Court of International Trade

(Slip Op. 81–53)

PASSPORT IMPORT CORPORATION, PLAINTIFF *v.* UNITED STATES, DEFENDANT

Before BOE, Judge.

Court No. 76–5–01285

FOOTWEAR

[Judgment for defendant.]

(Decided June 15, 1981)

Doherty, Melahn and Middleton (*William E. Melahn* at the trial) for the plaintiff.
Stuart E. Schiffer, Acting Assistant Attorney General; *Joseph I. Liebman*, Attorney in Charge, International Trade Field Office, Commercial Litigation Branch (*Jerry P. Wiskin* at the trial), for the defendant.

BOE, *Judge*: In the above-entitled action the plaintiff contests the appraisement of certain footwear imported from Spain and entered at Boston, Massachusetts on or about February 20, 1975. The plaintiff contends that the prototypes selected by the Customs Service in making the appraisement of said merchandise do not meet the definition of "like or similar" products contemplated by the statutory provisions.

Presumably, due in part to the age which this action has been permitted to acquire, the witnesses presented by the plaintiff, consisting of the national import specialist of the United States Customs Service and the president of the plaintiff company, offer conflicting testimony with respect to the identity of the merchandise in question as entered on or about February 20, 1975. During the course of the trial the evidence principally related to the importation of merchandise described in the commercial invoices as footwear possessing crepe rubber soles. Exhibits 3A, 3B and Exhibit 4 were introduced by the plaintiff as illustrative of the imported merchandise which was appraised upon direction of the customs national import specialist on the basis of American Selling Price. The president of the plaintiff company, however, in his testimony maintained that the specific footwear, the appraisement of which he wished to protest, consisted of a "true espadrille" possessing a rope sole. No exhibits illustrative of footwear of this style or character were offered in evidence nor was any evidence, other than the somewhat dubious and conflicting testimony of plaintiff's president, offered to establish that the crepe rubber sole footwear, described in the commercial invoices, identified by the national import specialist and represented by Exhibits 3A, 3B and Exhibit 4, was not the imported merchandise in question entered on February 20, 1975.

The defendant's evidence in support of its alternative claim is cogent.

From the evidence adduced the court, accordingly, adopts the following:

FINDINGS OF FACT

I. The merchandise in issue consisting of footwear was exported from Spain on or about January 20, 1975, and entered at the port of Boston, Massachusetts on or about February 20, 1975.

II. The merchandise, referred to in plaintiff's complaint and described in the commercial invoices as "Tiller (Topside)" and "Sexton," include an upper of fabric twill and basket weaves and a sole of crepe rubber. Plaintiff's Exhibits 3A, 3B and Exhibit 4 are fair and accurate representations thereof.

III. Upon liquidation the imported merchandise described as the "Sexton" was appraised at $8.00, less two percent packed,

per pair; the merchandise described as the "Tiller (Topside)" was appraised at $6.75, less two percent packed, per pair, said appraisements having been made on the basis of American Selling Price in accordance with 19 U.S.C. § 1402(g).

IV. The imported merchandise is like or similar to the domestic footwear described as "Sandhopper" and "Crosswalk" manufactured by Uniroyal, Inc., Naugatuck, Connecticut, plaintiff's Exhibit 2 representing the said prototypes used in the appraisement of the subject merchandise.

V. All claims with respect to any imported merchandise, other than the "Sexton" and the "Tiller (Topside)," have been abandoned by the plaintiff.

VI. The imported merchandise is also similar to the domestic footwear described as "Daisy-Mae" and "Visa" manufactured by Oomphies, Inc., defendant's Exhibits C and D having been offered by defendant as representing said prototypes of the subject merchandise in support of its alternative claim.

VII. True espadrille footwear possessing rope soles is not the merchandise in question described in the commercial invoices in the instant action.

From the foregoing Findings Of Fact the court makes the following:

CONCLUSIONS OF LAW

I. The plaintiff has failed to rebut the presumption of correctness attached to the appraisement of the subject imported merchandise by the Director of Customs based on American Selling Price, 19 U.S.C. § 1402(g).

II. The District Director of Customs properly appraised and assessed duty upon the merchandise in question on the basis of American Selling Price.

Let judgment be entered accordingly.

(Slip Op. 81–54)

LIEBA, INC., PLAINTIFF *v.* UNITED STATES, DEFENDANT

Consolidated Court No. 76–11–02408

Before FORD, Judge.

ARTICLES OF MANMADE FIBERS—BRISTLES

Polyvinyl chloride bristles approximately 4½ inches in length, *held* properly classifiable under item 389.60 (389.62), TSUS.

The claim for bristles under item 186.30 TSUS does not include

the imported merchandise since the legislative history indicates the intent of Congress to cover only natural bristles.

The imported bristles are flagged at one end which removes them from the category of manmade fibers.

The merchandise does not fall within the criteria in Schedule 7 since it is not tapered, is not within the maximum cross-section and is not composed of nylon.

[Judgment for defendant.]

(Decided June 15, 1981)

Burns, Doane, Swecker & Mathis (*William L. Mathis* on the briefs) for the plaintiff.

Stuart E. Schiffer, Acting Assistant Attorney General; *Joseph I. Liebman*, Attorney in Charge, International Trade Field Office, Commercial Litigation Branch (*Jerry P. Wiskin* on the briefs), for the defendant.

FORD, *Judge*: The parties to this action have cross moved for summary judgment under Rule 56. The imported bristles were classified under items 389.60 and 389.62 [1] of the Tariff Schedules of the United States. Plaintiff maintains the imported bristles are more specifically provided for alternatively under items 186.30, 309.43, 309.90 or 774.60 of the Tariff Schedules of the United States.

With respect to item 186.30, *supra*, it is the position of defendant that classification thereunder is precluded as a matter of law since said item is limited to products from animal or vegetable sources, and that the doctrine of similitude is inapplicable to plaintiff's claim under item 186.30. The flagging, defendant contends, constitutes a manufacturing process and accordingly items 309.43 and 309.90 do not cover the imported merchandise. Item 774.60, being a basket provision, is less specific according to defendant than the classified provision covering the imported merchandise.

The material issues of fact are not in controversy and the parties have agreed to the following:

1. The imported merchandise, assessed with duty at 15% ad valorem and 25¢ per lb. under item 389.60 and 389.62, TSUS, consists of brush bristles.
2. The imported brush bristles are in the form of monofilaments (excluding laminated and plexiform filaments) of polyvinyl chloride (a plastic material) being approximately 4½ inches in length.
3. The brush bristles are greater than 0.004 but not over 0.020 inch in maximum cross-sectional dimension.
4. The imported brush bristles have ends which are flagged and not tapered.

[1] Item 389.60, TSUS, was renumbered 389.62, TSUS, under Executive Order 11974, of February 25, 1977.

5. The imported brush bristles are articles which consist wholly of manmade textile fibers in noncontinuous form and of a material other than nylon, shellac, copal, natural rubber, casein or a vulcanized fiber, and which fibers are not carded, combed or spun.

6. "Flagging" is a further manufacturing step.

The statutory provisions involved provide as follows:

10. *General Interpretative Rules.* For the purposes of these schedules—

* * * * * * *

(c) an imported article which is described in two or more provisions of the schedules is classifiable in the provision which most specifically describes it; but, in applying this rule of interpretation, the following considerations shall govern:

(i) a superior heading cannot be enlarged by inferior headings intended under it but can be limited thereby;

(ii) comparisons are to be made only between provisions of coordinate or equal status, i.e., between the primary or main superior headings of the schedules or between coordinate inferior headings which are subordinate to the same superior heading;

(d) if two or more tariff descriptions are equally applicable to an article, such article shall be subject to duty under the description for which the original statutory rate is highest, and, should the highest original statutory rate be applicable to two or more of such descriptions, the article shall be subject to duty under that one of such descriptions which first appears in the schedules;

* * * * * * *

Schedule 1, Part 15, Subpart D:

* * * * * * *

186.30	Bristles, crude, or processed in any way for use in bristles or other articles	0.75¢ per lb. Rate of duty modified by T.D. 68–9.]

* * * * * * *

Schedule 3 headnotes:

* * * * * * *

2. For the purposes of the tariff schedules—

(a) the term "*textile materials*" means—

(i) the fibers (cotton, other vegetable fibers, wool and hair, silk, and man-made fibers) provided for in part 1 of this schedule,

(ii) the yarn intermediates and the yarns provided for in part 1 and part 4 (elastic yarns) of this schedule,

(iii) the cordage provided for in part 2 and part 4 (elastic cordage) of this schedule,
(iv) the fabrics provided for in part 3 and part 4 of this schedule,
(v) braids, as defined in headnote 2(f), *infra*, and
(vi) except as provided by headnote 5, articles produced from any of the foregoing products;

* * * * * * *

Schedule 3, Part 1, Subpart E:

* * * * * * *

	Fibers (in noncontinuous form), whether known as cut fiber, staple, or by any other name, not carded, not combed, and not otherwise processed:	
	Wholly of filaments (except laminated filaments and plexiform filaments):	
*	* * * * * *	
309.43	Other	7.5% ad val. [Rate of duty modified by T.D. 68–9.]
	Textile fibers, of man-made fibers, carded, combed, or other processed but not spun:	
309.90	Wholly of man-made fibers	2.5¢ per lb.+ 7.5% ad val. [Rate of duty modified by T.D. 68–9.]

Schedule 3, Part 7, Subpart B:

* * * * * * *

Articles not specially provided for, of textile materials:

* * * * * * *

Of man-made fibers:

* * * * * * *

389.60 [389.62.]	Other	25¢ per lb.+ 15% ad val. [Rate of duty modified by T.D. 68–9.]

Schedule 7, Part 12, Subpart B:
Articles not specially provided for, of rubber or plastics:

* * * * * * *

774.60 Other ..... 8.5% ad val.

The classification of merchandise by the Customs Service is presumed to be correct. 28 U.S.C. 2635 (1976).[2] Accordingly, plaintiff has the dual burden of establishing the classification to be incorrect and affirmatively establish the correct classification.

The parties are in agreement that the imported polyvinyl chloride brush bristles are composed of plastic. Such merchandise falls within schedule 3, TSUS, *i.e.*, textile materials, if they fall within headnote 2(a), *supra*. This court in *R. H. Macy & Co., Inc.* v. *United States*, 62 Cust. Ct. 219, C.D. 3733, 297 F. Supp. 171 (1969), *aff'd*, 57 CCPA 115, C.A.D. 988, 428 F. 2d 856 (1970) made the following observation:

> * * * We are inclined to view that the term "plastic" as employed in part 12 of schedule 7 describes a form as well as a substance, and does not cover plastic materials which have been converted into textile materials.
>
> A yarn which was produced from a basic plastic substance has by that process of manufacture taken on the status of a textile material from which a textile product will be produced, and for tariff purposes may no longer be considered a "plastic" but rather a man-made fiber. (Cf. *Tide Water Oil Company* v. *United States*, 171 U.S. 210 and *L. Mendelson Co.* v. *United States*, 9 Cust. Ct. 256, C.D. 704.) Textile fibers (of which man-made fibers are one form) and products made therefrom are provided for in schedule 3 of the Tariff Schedules of the United States * * *. [P. 230.]

There is no dispute that the imported bristles are flagged at one end but not tapered. The flagging removes the merchandise from the category of manmade fibers per se, and brings it within the category of an article of manmade fibers which latter fact is conceded by plaintiff in its Memorandum in Opposition to Defendant's Cross Motion for Summary Judgment. It is apparent from a reading of Schedule 3 that said schedule is intended to include textile fibers and textile products. The court observes in the Tariff Classification Study (1960), Schedule 3, page 245, that item 389.60 was derived from paragraphs 1308 and 1312 of the Tariff Act of 1930, both of which cover articles of manufacture. Headnote 1 of Schedule 3, Part 7, Subpart B, reads as follows: "[t]his subpart covers articles of textile materials, not covered elsewhere in the tariff schedules". The above headnote together with the provisions following indicate the intent to make this subpart the basket provision of schedule 3. This headnote does not inure to the benefit of plaintiff since, as indi-

[2] The presumption is Presently covered by 28 U.S.C. 2639(a)(1) (1980).

cated *infra*, the court is of the opinion that said merchandise is not provided for elsewhere in the tariff schedules. The court is aware of Headnote 1(x) of Schedule 3, Part 1, Subpart E which excludes "brush bristles provided for in part 12C of schedule 7. Defendant contends and plaintiff admits that the provision for brush bristles in schedule 7 does not cover the imported merchandise for the following reasons: (a) they are not tapered or within the maximum cross section as required in the superior heading; (b) they are not of nylon as required by item 773.15; (c) the bristles are not included within item 773.20 for "other" as they do not meet the requirements in the superior heading. Accordingly, plaintiff cannot benefit from the headnote.

Based upon the foregoing exclusions, it is plaintiff's position that since the imported bristles are excluded in 773.15 and 773.20, *supra*, it logically follows they are properly subject to classification under item 186.30 which is the only other provision for bristles. Defendant argues said provision covers only natural bristles and not those of man-made fibers. This position is borne out by the information contained in the Tariff Classification Study (1960), Schedule 1, Part 15, Subpart D, wherein the following is contained:

> Subpart D brings together provisions now included in 8 paragraphs covering certain feathers, downs, bristles, and hair, crude, sorted, or prepared for use in other articles. None of the provisions in subpart D involves duty changes, except item 186.30 which provides for bristles, crude, or processed in any way for use in brushes or other articles.
>
> Bristles, crude, not bunched, prepared, or sorted are currently free of duty under paragraph 1637 of the Tariff Act of 1930, whereas, bristles, bunched, prepared, or sorted are dutiable at 3 cents per pound under paragraph 1507. Virtually all imports have been bunched, prepared, or sorted, and are therefore dutiable. Inasmuch as the 3 cents per pound duty is insignificant (equal to 1.1 percent ad valorem on imports in 1957), the separate free provision for crude bristles has been dropped. Also the Cuban preference of 0.6 cent per pound has been eliminated. Imports from Cuba are very small and the ad valorem equivalent of the preference amounts to far less than one percent. All bristles, therefore, whether crude or prepared, and from whatever source are covered by item 186.30 at the rate of 3 cents per pound. [P. 254.]

All the articles covered by the study are natural, *i.e.*, feathers, hair and fur, not on the skin, as well as bristles. The only change in duty involved bristles which eliminated the provision for crude bristles which, under the Tariff Act of 1930, were entitled to entry free of duty. The court observes, as an historical fact, that bristles were first provided for as a dutiable article under the Tariff Act of 1816. It was not until the Tariff Act of 1894 that Congress provided for both

crude and processed bristles, and accorded free entry for the former and a dutiable status for the latter. Interestingly enough the same language was utilized in the dutiable provisions of the Tariff Act of 1894 and 1930 and the identical language was used in the free provision of said acts. Accordingly, the court is of the opinion that item 186.30 was intended to cover the importation of natural bristles.

Plaintiff's claims under items 309.43 and 309.90 are inapplicable. It is axiomatic in this field of jurisprudence that the Summaries of Trade and Tariff Information (1969), while not indicative of the intent of Congress, may serve as a useful tool in determining the scope of the provisions. *Hawaiian Motor Company* v. *United States*, 82 Cust. Ct. 70, C.D. 4790, 473 F. Supp. 787 (1979), *aff'd*, 67 CCPA —, C.A.D. 1241, 617 F. 2d 286 (1980). Said Summary makes the following comment:

> The products covered by this summary consist of noncontinuous manmade fibers, not corded, not combed, and not otherwise processed. The products are manufactured generally by cutting various forms of continuous manmade fibers (usually monofilaments, strips, or grouped filaments) into short lengths. * * *. [P. 75.]

The Summary continues and states with respect to item 309.90, TSUS:

> The manmade fibers covered herein are those which have been carded, combed, or otherwise processed but not spun into yarn. They are usually intermediate products used for the manufacture of spun yarn. Trade in such processed fibers consists almost entirely of sliver, roving, or top.
>
> * * * * * * *
>
> Sliver, a round strand of fibers loosely compressed together without twist, is condensed from the thin webs formed by carding machines. Roving is sliver usually put through draw frames to make the fibers more nearly parallel. Top is an untwisted strand of combed sliver of manmade fibers; it is also the product of direct-processing machines which use manmade grouped filaments as the raw material.
>
> Sliver is normally further processed within the establishment in which it is produced. The sliver that enters commerce and the sliver manufactured by direct-processing machines are usually shipped in cylindrical containers of various sizes. Roving is also primarily an intermediate operation in a yarn-spinning plant; that entering commerce is generally wound into bobbins with the use of flyers which insert a slight amount of twist. Top almost always enters trade channels; it is usually shipped in coiled form in cylindrical and square containers or in ball form, sometimes with one end flattened. [P. 109.]

It is apparent item 309.43 does not cover fibers which have been further processed, as exemplified by the flagging of the instant mer-

chandise. Likewise item 309.90 appears to encompass such articles as were intended to be used for the spinning of yarn. This is further borne out by the First Supplemental Report, which on page 24 in reference 12, eliminated "for spinning" and refers to reference No. 3 on page 20. Therefore items 309.43 and 309.90 do not encompass the imported merchandise.

Plaintiff further urges if the imported merchandise is not subject to classification under any of the foregoing, it is properly dutiable under item 774.60, which covers other articles, n.s.p.f., of rubber or plastic. While this provision contains a n.s.p.f. clause it is nonetheless more specific than the classified provision since the latter is further encumbered by Headnote 1 of Schedule 3, Part 7, Subpart B. The court finds item 389.62 to be more specific than item 774.60. The term "plastic" as determined by the court in *Macy, supra*, indicates that Schedule 7, while describing form and substance, does not cover plastic material which has been converted to textile materials. Additionally, regarding the question of relative specificity, the court in *Arthur J. Humphreys, Packard-Bell Electronics* v. *United States*, 56 CCPA 67, C.A.D. 956, 407 F. 2d 417 (1969), citing *United States* v. *Simon Saw & Steel Company*, 51 CCPA 33, C.A.D. 834 (1964), held the more specific provision is the one more difficult to satisfy. The definition of textile materials imposed by Headnote 2a of Schedule 3 has more stringent requirements and is therefore more specific.

Plaintiff urges in its brief but did not plead the issue of applicability to the similitude provision as it would apply to item 186.30. The law is well settled that claims not contained within the parameter of the pleading may not be considered. *United States* v. *E. H. Bailey & Co.*, 32 CCPA 89, C.A.D. 291 (1944).

Accordingly all claims of plaintiff are overruled. Judgment will be issued accordingly.

FRANKLIN INDUSTRIES, INC. PLAINTIFF *v.* UNITED STATES, DEFENDANT

Court No. 79-6-00958

Before RICHARDSON, Judge

ON PLAINTIFF'S MOTION AND DEFENDANT'S CROSS-MOTION FOR SUMMARY JUDGMENT

[Plaintiff's motion denied; defendant's cross-motion granted.]

(Decided June 18, 1981)

Paul F. Stack, Mark D. DeBofsky and *Stack & Filpi* for the plaintiff.

Stuart E. Schiffer, Acting Assistant Attorney General; *Joseph I. Liebman*, Attorney in Charge, International Trade Field Office, Commercial Litigation Branch (*Saul Davis* on the briefs), for the defendant.

RICHARDSON, *Judge*: In this action involving the importation from West Germany of a used Schiess MC WBF–19 horizontal boring mill ("Schiess mill") plaintiff has moved and defendant has cross-moved for summary judgment. The essential facts underlying the controversy are not in dispute.

Plaintiff purchased the boring mill in October 1977, in West Germany from Konrad Seidler for shipment to the United States. Owing to its size and weight [14.5′ high x 40′ long and 137,000 pounds] and the difficulty of obtaining booking for shipment the mill was disassembled and containerized except for one 30 foot long column, and the containers and column separated into two groups for separate shipment. Part of the mill, consisting of one 40 foot container and two 20 foot containers, was shipped on one vessel, and is covered by entry 114430, dated December 16, 1977, which is the subject of this action. And the remaining part, consisting of the column, was subsequently shipped on another vessel, and is covered by entry 115518, dated December 22, 1977, which has never been the subject of protest or a civil action. Upon entry at Chicago, Illinois, both entries were classified in liquidation under TSUS item 674.53 as parts of machine tools, other, at the duty rate of 7 *per centum ad valorem*.

On these facts plaintiff contends that the merchandise the subject of entry 114430 should have been classified as entered under TSUS item 674.32 as a boring machine [vertical spindle] at the duty rate of 6 *per centum ad valorem*. Plaintiff argues that the articles covered by this entry constitute an *entirety* owing to the difficulties encountered by plaintiff that necessitated separate shipment of parts of the mill, citing, among other things, *Daisy-Heddon, Div. Victor Comptometer Corp.* v. *United States*, 66 CCPA 97, 600 F. 2d 799, C.A.D. 1228 (1979).

Defendant contends that the holding in *Daisy-Heddon* is inapposite, and does not disturb the long settled rule that entry of parts of an article will not permit classification of the entered parts as an *entirety*, citing *Stella D'oro Biscuit Co., Inc.* v. *United States*, 65 CCPA 52, C.A.D. 1205, 570 F. 2d 945 (1978), aff'g. 79 Cust. Ct. 28, 33–34, C.D. 4709, 436 F. Suppl 398 (1977). Defendant argues that there is no such thing as an *unfinished entirety*.

The court agrees with defendant. Plaintiff concedes that prior to the decision of our appellate court in *Daisy-Heddon*, the doctrine of *entireties* was inapplicable when separate parts of a single article were imported in more than one shipment, calling attention to the holdings in *United States* v. *Baldt Anchor, Chain and Forge Div. of Boston Metals Co.*, 59 CCPA 122, C.A.D. 1051, 459, F. 2d 1403 (1972), and *Trans-World Shipping Service, Inc.* v. *United States*, 58 Cust. Ct. 120, C.D. 2900 (1967).

In *Baldt Anchor* our appellate court held that an importation of five of six machines which, together constituted a complete system of machines for the production of welded chain anchors, did not constitute an *entirety*. The court stated (p. 126):

> To hold that the bulk of the equipment, imported in one shipment, is an entirety of unfinished apparatus and that the remaining element of that equipment, imported in a separate shipment, is a part of that entirety, would greatly compromise the doctrine of entireties. If that were the law, once it was determined that assembled pieces of equipment constitute an entirety, the mere absence of some of those pieces, even though essential ones, from the shipment would not preclude its treatment as an entirety of "unfinished" apparatus and the missing pieces of equipment would be "parts" of that entirety. Clearly that is not the law. [Citation omitted.]

Plaintiff's reliance upon the recent decision of the Court of Customs and Patent Appeals in *Daisy-Heddon* to alter the holding of that court in *Baldt Anchor* is misplaced. Not only was *Baldt Anchor* not discussed in *Daisy-Heddon*, but *Daisy-Heddon* did not even involve the doctrine of *entireties*.

Daisy-Heddon involved the dutiable classification of *unfinished* fishing reels, and turned on the question of whether the imported articles were *substantially complete* in the condition and at the time imported. And the five determining factors [1] applied in *Daisy-Heddon* [not intended to be exhaustive] to which plaintiff calls attention and urges upon the court here, had a bearing in determining whether or not the reels were substantially complete so as to support classification of the unfinished articles as *reels* rather than as *parts* of reels as claimed. In the instant case the *used* mill is the very antithesis of an *unfinished* article such as that involved in *Daisy-Heddon*, because the mill represents a *finished* and *completed* article that was disassembled prior to importation—an entirely different state of facts than that dealt with in *Daisy-Heddon*.

There being no *entirety* present here, the principle of *Baldt Anchor* is controlling and must be followed. The customs service was correct in classifying the subject importation as *parts* of a machine under item 674.53.

Also, 19 U.S.C. 1500(d) mandates that each entry of merchandise be liquidated separately. The customs service cannot merge two distinct entries for purposes of liquidating two separate shipments of merchandise as an entirety.

---

[1] i.e., (1) Comparison of the number of omitted parts with the number of included parts; (2) comparison of the time and effort required to complete the article with the time and effort required to place it in its imported condition; (3) comparison of the cost of the included parts with that of the omitted parts; (4) the significance of the omitted parts to the overall functioning of the completed article; and (5) trade customs, i.e., does the trade recognize the importation as an unfinished article or as merely a part of that article.

Plaintiff could have availed itself of an alternative in this case. As defendant suggests in its reply memorandum plaintiff might have sought to utilize the provisions of the Tariff Act of 1930, as amended, relating to the Foreign Trade Zone and Warehousing in order to achieve unitary classification of the boring mill even if it were obliged to dismantle the mill and ship parts of it at different times. See 19 U.S.C.A., section 81c and 1562.

For the reasons stated, plaintiff's motion is denied, and defendant's cross-motion is granted. Judgment will be entered accordingly.

(Slip Op. 81–56)

CARLISLE TIRE AND RUBBER COMPANY, PLAINTIFF, *v.* UNITED STATES, DEFENDANT

Court No. 79–3–00423

Before MALETZ, Judge

ON PLAINTIFF'S MOTION AND DEFENDANT'S CROSS-MOTION FOR SUMMARY JUDGMENT

[Plaintiff's motion for summary judgment denied; defendant's cross-motion for summary judgment denied; and remand to the Secretary of Commerce ordered.]

(Dated June 19, 1981)

Eugene L. Stewart and *Daniel G. Rooney* for the plaintiff.

Stuart E. Schiffer, Acting Assistant Attorney General; *David M. Cohen*, Director, Commercial Litigation Branch (*Sheila N. Ziff* on the brief), for the defendant.

Lauren R. Howard; Collier, Shannon, Rill & Scott of counsel; for amicus curiae Bicycle Manufacturers Association of America, Inc.

MALETZ, *Judge:* Plaintiff, a domestic manufacturer of bicycle tires and tubes, challenges a negative countervailing duty determination published by the Secretary of the Treasury on January 8, 1979 involving bicycle tires and tubes from Taiwan. 44 F.R. 1815–16. The determination was rendered under section 303 of the Tariff Act of 1930, as amended (19 U.S.C. § 1303) as that provision existed prior to January 1, 1980.[1]

In substance, the Secretary found that the Taiwanese bicycle tire and tube manufacturers received benefits from the Government of Taiwan under programs providing for (1) a preferential income tax ceiling; (2) preferential export financing; and (3) deferred payment of duties on machinery and equipment imported into Taiwan. However, the Secretary further found "that the benefits involve an aggregate amount considered to be *de minimis* in size, and that therefore no

[1] January 1, 1980 was the effective date of the countervailing duty amendments made by the Trade Agreements Act of 1979. 93 Stat. 306–7 (1979).

bounty or grant is being paid or bestowed * * * within the meaning of section 303, Tariff Act of 1930, as amended (19 U.S.C. 1303) upon the manufacture, production or exportation of bicycle tires and tubes from the Republic of China." 44 F.R. at 1816. Specifically, the aggregate benefit found by the Secretary to be *de minimis* was 0.28 percent ad valorem.

Presently before the court are cross-motions for summary judgment. Plaintiff argues (1) that even a *de minimis* benefit must be countervailed; and (2) that the benefits received by the Taiwanese manufacturers were actually several times larger than those found by the Secretary. On the other hand, defendant argues that the *de minimis* rule is applicable to a countervailing duty determination and that the Secretary correctly determined the amount of the benefits.

I

We turn first to plaintiff's claim that even *de minimis* bounties and grants must be countervailed. Because the countervailing duty statute is mandatory in its terms, requiring the imposition of a duty in all cases where a bounty or grant was received by the foreign manufacturers, plaintiff reasons that the *de minimis* doctrine should play no role in the Secretary's decision as to whether duties are to be imposed. However, the *de minimis* doctrine is in fact applicable to even those statutes which, by their terms, apply in all cases. Illustrative is *N.L.R.B.* v. *Fainblatt*, 306 U.S. 601 (1939), where the Supreme Court, while holding that the National Labor Relations Act reached all businesses engaged in interstate commerce and embodied the full scope of Congress' power to regulate such commerce, nevertheless indicated that the *de minimis* doctrine was still applicable (id. at 607):

> The Act on its face thus evidences the intention of Congress to exercise whatever power is constitutionally given to it to regulate commerce by the adoption of measures for the prevention or control of certain specified acts * * *. Examining the Act * * * we can perceive no basis for inferring any intention of Congress to make the operation of the Act depend on any particular volume of commerce affected *more than that to which courts would apply the maxim de minimis.* [Emphasis added.]

Further, the *de minimis* doctrine has been applied by this court to "mandatory" statutes requiring the collection of import duties. Thus, in *R. W. Gresham* v. *United States*, 3 Cust. Ct. 308, C.D. 263 (1939), the court observed that the case before it was one where the *de minimis* rule should be applied. In that circumstance, the court concluded that although certain imported flavoring contained alcohol, the amount "of alcohol * * * [was] not substantial enough to bring

this flavor[ing] within the provision" covering flavorings containing alcohol. *Id.* at 310. See also *Varsity Watch Co.* v. *United States*, 34 CCPA 155, 161–63, C.A.D. 359 (1947); *Genender Wholesale* v. *United States*, 1 CIT —, Slip Op. 81–40 at 4–5 (May 7, 1981).

Additionally, in *ASG Industries, Inc.* v. *United States*, 82 Cust. Ct. 101, 138, C.D. 4794, 467 F. Supp. 1200, 1231 (1979), *appeal dismissed*, June 18, 1980, this court, in the context of applying the countervailing duty statute before us here, stated:

> [T]he economic benefits extended * * * by the Italian Government are concededly "grants" within the dictionary meaning of that term *and are more than de minimis*. This being the case, whether or not their economic effect is to distort international trade or to induce exports is immaterial. For, as explained in detail, such a bounty or grant is within the reach of the countervailing duty law without regard to its trade effects. [Emphasis added.]

Similarly, in *ASG Industries, Inc.* v. *United States*, 67 CCPA —, C.A.D. 1237, 610 F. 2d 770 (1979), which specifically held that the countervailing duty statute was mandatory, the court in discussing the authority of the Secretary to waive imposition of a countervailing duty, indicated the applicability of the *de minimis* rule to the countervailing duty statute (67 CCPA at —, 610 F. 2d at 776):

> To permit the Secretary to avoid using his waiver authority (and to avoid having to find that a more than *de minimis* bounty or grant or its adverse effect has been eliminated or substantially reduced) by simply finding that, for purposes of 19 U.S.C. 1303, there is no bounty or grant * * * would * * * frustrate the congressional intent to tighten administration of the countervailingduty law. [Emphasis omitted.]

In short, there is clear precedent for applying the *de minimis* rule to "mandatory" statutes and the countervailing duty statute in particular. Considering that a *de minimis* benefit is, by definition, of no significance whatever, I see no reason to reject or limit the thrust of these cases. The court therefore holds that the *de minimis* doctrine is applicable to cases arising under the countervailing duty statute.

II

We consider next plaintiff's alternative argument that the Secretary's final determination seriously understated the value of the benefits received by the Taiwanese bicycle tire and tube manufacturers and that these benefits were more than *de minimis*.

By way of background, during the period covered by the countervailing duty investigation, the usual income tax rate paid by Taiwanese manufacturers was 35 percent of taxable income. However,

Article 10 of the Taiwanese Statute for Encouragement of Investment placed a limit on the tax rate to be applied to the income of qualifying firms. Five producers of bicycle tires and tubes in Taiwan benefited under this program and enjoyed a maximum tax rate of only 25 percent. Although the Secretary concluded that the ad valorem benefit of this program was only 0.27 percent, plaintiff contends that the actual benefit was 0.71 percent. At the heart of this difference is the question of whether the Secretary relied upon the correct figures in calculating the benefit of the lower tax rate.

The Secretary had two alternate sets of figures upon which he could have relied. One set, furnished by the Government of Taiwan in response to the Secretary's countervailing duty questionnaire, contained a table setting forth income tax data, the first column of which was headed "Value of Income Tax Ceiling of 25 percent." This table appears, on its face, to set forth the *value* and thus the benefit of the lower income tax rate for each firm.

For reasons unclear on the record, the Secretary chose not to rely upon the Government of Taiwan figures. Instead, the Secretary relied upon a set of figures provided by counsel for the Taiwan Bicycle Tire and Tube Manufacturers Association (the Association), which purport to represent the *actual tax paid* by each Taiwanese firm at the rate of 25 percent. Extrapolating from this second set of figures, the Secretary computed the ad valorem benefit of the lower rate.

Significantly, the second set of figures provided by the Association's counsel and relied upon by the Secretary, cannot be reconciled with the figures furnished by the Government of Taiwan. Thus, a comparison of the figures which the Association's counsel says represents the *actual tax paid* at 25 percent, with the figures the Government of Taiwan submitted as the *value* of being taxed at a lower rate, reveals that both sets of figures are virtually identical.

Put otherwise, the Government of Taiwan presented a figure for each producer; that amount was identified as the *value of the benefit* received by the particular firm. Counsel for the Association presented essentially identical figures but claimed that those figures represented the *actual income tax paid* as opposed to the value of the benefit.

Plaintiff alleges that the Secretary erred in relying upon the figures submitted by the Association's counsel and urges this court to treat the figures supplied by the Government of Taiwan as correct. Defendant counters by stressing, without clear support in the record, that there is a close relationship between counsel for the Association and the Taiwanese Government and that the figures provided by the Association are in effect a semi-official clarification of the figures provided

by the Government of Taiwan. Because of this, the argument proceeds, it was reasonable for the Secretary to rely upon the Association's figures.

The problem with defendant's argument, however, is that nothing in the record clearly indicates that the set of figures furnished by the Association's counsel is in fact a Taiwanese Government clarification of the prior figures. And even if the set of figures furnished by the Association could be traced to the Taiwanese Government, nothing in the record reveals which set of figures is correct. In short, the record reveals no satisfactory basis for the Secretary's choosing between the two sets of figures and his decision to rely upon the set of figures furnished by the Association rather than the figures furnished by the Government of Taiwan was therefore arbitrary. See, e.g., *National Citizens Com. For Broadcasting* v. *F.C.C.*, 555 F. 2d 938, 956 (D.C. Cir. 1977), *aff'd and rev'd in part on other grounds*, 436 U.S. 775 (1978); *Associated Indus. of N.Y.S., Inc.* v. *United States Dept. of Labor*, 487 F. 2d 342, 349–350 (2d Cir. 1973).

What is more, the Secretary's determination of the amount of the net bounty or grant, as well as his decision not to impose countervailing duties, is subject to *de novo* review. *ASG Industries, Inc.* v. *United States*, 67 CCPA at —, 610 F. 2d at 778–780. Thus a mere showing of reasonableness on the part of the defendant does not suffice to establish the correctness of the Secretary's determination. Here the presumption of correctness enjoyed by the Secretary's determination has been overcome by the existence of two sets of figures each of which casts grave doubt upon the other. Therefore, in view of the absence of clear evidence indicating which set of figures should have been relied upon, the court cannot approve the Secretary's findings as to the ad valorem benefit of the 25 percent tax rate. For the same reason, the court cannot accept plaintiff's computations which are based on the Taiwanese Government's figures.

III

Unresolved questions of material fact are also present with regard to the preferential export financing program. Under that program, the Government of Taiwan made available to exporters short-term financing at a specified below-market rate of interest. The data obtained by the Secretary as to this program did not indicate the amount of each loan and the actual duration of time it was outstanding. Nor did such data include the actual amount of interest paid either on a per loan, per manufacturer, or industry-wide basis. In the absence of such information it was not possible for the Secretary to determine

the benefit of this program to the Taiwanese manufacturer.[2] Because defendant as well as plaintiff base their computations on inadequate data, the court is unable to accept either party's conclusions as to the ad valorem benefit of this program.

It is thus apparent that the record does not contain sufficient information to enable the court to determine or reasonably estimate the amount of benefit received by the Taiwanese manufacturers, let alone decide whether or not that benefit is *de minimis*. In sum, neither party has demonstrated "what the truth is," and plaintiff's motion and defendant's cross-motion for summary judgment are therefore denied. *N.L.R.B.* v. *Smith Industries, Inc.*, 403 F. 2d 889, 893 (5th Cir. 1968).

IV

Given the denial of both parties' motions for summary judgment, the court could simply allow this action to proceed to trial. However, the court is also empowered under the Customs Courts Act of 1980 to remand this action for a redetermination of the ad valorem benefit received by the Taiwanese manufacturers. 28 U.S.C. §§ 2643(b) and (c) (1). See also, e.g., *ASG Industries, Inc.* v. *United States*, 1 CIT —, Slip Op. 81–34 (Apr. 24, 1981); *The Budd Company, Railway Division* v. *United States*, 1 CIT —, 507 F. Supp. 997 (1980). See also *SCM Corp.* v. *United States*, 84 Cust. Ct. 227, C.R.D. 80–2, 487 F. Supp. 96 (1980).

But the fact that this court may decide *de novo* the issues presented by this action does not mean that such a remand would be inappropriate. As was explained in *Douglas* v. *Hampton*, 512 F. 2d 976, 988 (D.C. Cir. 1975):

> "[j]udicial and administrative agencies 'are to be deemed collaborative instrumentalities of justice,' " and "[c]ourts have frequently called upon administrative bodies . . . for assistance in connection with issues falling within an area of administrative competence." The District Court stated that it was exercising its discretion in remanding the case in the interest of sound judicial administration, and we cannot say that the decision to do so was erroneous. * * * [Footnote omitted.]

See also *Bethlehem Steel Corporation* v. *Grace Line, Inc.*, 416 F. 2d 1096, 1108–1109 (D.C. Cir. 1969); *Atchison, Topeka and S.F. Ry. Co.* v. *Aircoach Transp. Ass'n*, 253 F. 2d 877, 885–86 (D.C. Cir. 1958), *cert. denied*, 361 U.S. 930 (1960).

---

[2] It is true that the countervailing duty statute permits the Secretary to "determine, *or estimate*, the net amount of each * * * bounty or grant." [Emphasis added.] However, in the court's view, the Secretary should not resort to an estimate unless it is not reasonably possible to obtain the information necessary for a determination.

As the Supreme Court indicated in an analogous context: "Where suit is brought after the first administrative decision and stayed until remaining administrative proceedings have concluded, judicial resources are conserved and both parties fully protected." *United States* v. *Michigan National Corp.*, 419 U.S. 1, 6 (1974). Here, a new investigation may lead to a countervailing duty determination with which plaintiff agrees, thereby obviating the need for a trial. Also, "without an adequate factual record, [this court cannot] perform a meaningful judicial review of countervailing duty determinations." *ASG Industries, Inc.* v. *United States*, 67 CCPA at —, 610 F. 2d at 778. Remanding this action will insure that an adequate factual basis for resolution of this dispute will be presented to the court should this case eventually proceed to trial.

Given these circumstances, this action is stayed and the Secretary's negative countervailing duty determination is vacated. The action is remanded to the Secretary of Commerce [3] for further inquiries as may be needed to determine the ad valorem benefit provided the Taiwanese bicycle tire and tube manufacturers by the Government of Taiwan. The redetermination is to be made in accordance with the countervailing duty law in effect prior to January 1, 1980. See Pub. L. 96-39, Title X, §§ 1002(b) (1)(B) and (2), 93 Stat. 307. The Secretary is directed to report his redetermination to the court within 120 days of this order.

[3] The functions of the Secretary of the Treasury under 19 U.S.C. § 1303 were transferred to the Secretary of Commerce pursuant to Reorg. Plan No. 3 of 1979, § 5(a)(1)(C), 44 F.R. 69275, 93 Stat. 1381, eff. Jan. 2, 1980, as provided by section 1-107(a) of Ex. Ord. No. 12188, January 2, 1980, 45 F.R. 993.

International Trade Commission Notices

Investigations by the U.S. International Trade Commission

DEPARTMENT OF THE TREASURY, *July 1, 1981*

The appended notices relating to investigations by the U.S. International Trade Commission are published for the information of Customs officers and others concerned.

WILLIAM T. ARCHEY,
Acting Commissioner of Customs.

Investigation No. 731-TA-30 (Final)

UNREFINED MONTAN WAX FROM EAST GERMANY

AGENCY: United States International Trade Commission

ACTION: Scheduling of Prehearing Conference and Hearing

SUMMARY: The United States International Trade Commission hereby gives notice that the prehearing conference and hearing to be held in connection with the subject investigation are scheduled to begin at 9:30 a.m., e.d.t., on July 14 and at 10:00 a.m., e.d.t., on July 20, 1981, respectively, in the U.S. International Trade Commission Building, 701 E Street NW., Washington, D.C.

FOR FURTHER INFORMATION CONTACT: Judith Case, Office of Investigations, U.S. International Trade Commission, Room 350, 701 E Street NW, Washington, D.C. 20426; telephone 202-523-0339.

SUPPLEMENTARY INFORMATION: On March 4, 1981, the Commission instituted a final antidumping investigation on unrefined montan wax from East Germany and scheduled a prehearing conference and hearing in connection with the investigation for May 21, and June 8, 1981, respectively (46 F.R. 18633). A staff report containing preliminary findings of fact was made available to all interested parties on May 20, 1981. On April 21, 1981, however, the U.S. Department of Commerce announced an extension of the investigation for up

to 60 days (46 F.R. 22778) and the Commission postponed its scheduled prehearing conference and hearing (46 F.R. 25376). Commerce will now make its final less-than-fair-value determination not later than July 17, 1981, and the Commission must make its final determination within 45 days after the final Commerce action. Accordingly, the Commission is rescheduling its prehearing conference for July 14, 1981, and its hearing for July 20, 1981.

Requests to appear at the hearing should be filed in writing with the Secretary to the Commission not later than the close of business (5:15 p.m., e.d.t.) on July 13, 1981. All persons desiring to appear at the hearing and make oral presentations must file prehearing statements and should attend the prehearing conference at 9:30 a.m., e.d.t., on July 14, 1981, in Room 117 of the U.S. International Trade Commission Building. Prehearing statements should be filed on or before July 15, 1981.

Testimony at the public hearing is governed by section 207.23 of the Commission's Rules of Practice and Procedure (19 CFR 207.23). This rule requires that testimony be limited to a non-confidential summary and analysis of material contained in prehearing statements and to new information. The Commission will not receive prepared testimony for the public hearing, as would otherwise be provided for by rule 201.12(d). All legal arguments, economic analyses, and factual materials relevant to the public hearing should be included in prehearing statements in accordance with rule 207.22. Post-hearing briefs will also be accepted within a time specified at the hearing.

WRITTEN SUBMISSIONS: Any person may submit to the Commission a written statement of information pertinent to the subject of this investigation. A signed original and nineteen (19) true copies of each submission must be filed at the Office of the Secretary, U.S. International Trade Commission Building, 701 E Street NW., Washington, D.C. 20436, on or before July 15, 1981. All written submissions, except for confidential business data will be available for public inspection.

Any business information for which confidential treatment is desired shall be submitted separately. The envelope and all pages of such submissions must be clearly labeled "Confidential Business Information." Confidential submissions and requests for confidential treatment must conform with section 201.6 of the Commission's Rules of Practice and Procedure (19 CFR 201.6).

For further information concerning the conduct of the investigation, hearing procedures, and rules of general application, consult the Commission's Rules of Practice and Procedure, part 207, subparts

A and C (19 CFR 207), and part 201, subparts A through E (19 CFR 201).

This notice is published pursuant to section 207.20 of the Commission's Rules of Practice and Procedure (19 CFR 207.20, 44 F.R. 76458).

By order of the Commission.

Issued: June 19, 1981.

KENNETH R. MASON,
Secretary.

In the Matter of CERTAIN LARGE VIDEO MATRIX DISPLAY SYSTEMS AND COMPONENTS THEREOF	Investigation No. 337-TA-75

Notice of Exclusion Order

AGENCY: U.S. International Trade Commission.

ACTION: Issuance of exclusion order.

SUMMARY: On June 19, 1981, the Commission issued an Action and Order and Opinion in the above-captioned investigation. The Commission ordered that large video matrix display systems and components thereof, including spare parts, that infringe claims of U.S. Letters Patent Nos. 3,594,762; 3,941,926; or 4,009,335, and are manufactured by SSIH Equipment S.A., of Bienne, Switzerland, or any of its affiliated companies, parents, subsidiaries, or other related business entities, or their successors or assigns, be excluded from entry into the United States for the remaining terms of said patents, except under license.

SUPPLEMENTARY INFORMATION: The Commission instituted this investigation to determine whether there is a violation of section 337 of the Tariff Act of 1930, 19 U.S.C. § 1337, in connection with the importation into the United States and the sale therein of certain large video matrix display systems and components thereof. Notice was published in the Federal Register. 44 F.R. 75242 (Dec. 19, 1979).

At a public meeting on June 1, 1981, the Commission determined unanimously that there is a violation of section 337 in the unauthorized importation and sale of certain large video matrix display systems and components thereof that infringe the claims of U.S. Letters Patent Nos. 3,594,762; 3,941,926; and 4,009,335. The Commission determined unanimously that public interest considerations do not preclude the granting of relief in this case and determined by a vote of three to one

(Commissioner Stern dissenting) that the appropriate remedy is an order directing that the infringing articles manufactured by SSIH Equipment S.A. of Bienne, Switzerland, be excluded from entry into the United States for the remaining terms of the patents, except under license granted by the patent owner.

Copies of the Commission's Action and Order, Opinion, and all other nonconfidential documents in the record of this investigation are available for inspection during official business hours (8:45 a.m. to 5:15 p.m.) in the Office of the Secretary, U.S. International Trade Commission, 701 E Street NW., Washington, D.C. 20436, telephone 202–523–0161.

FOR FURTHER INFORMATION CONTACT: Michael B. Jennison, Esq., Office of the General Counsel, U.S. International Trade Commission, telephone 202–523–0350.

By order of the Commission.

Issued: June 19, 1981.

KENNETH R. MASON,
Secretary.

Investigation Nos. 701–TA–69 through 78 (Preliminary)

SODIUM GLUCONATE FROM BELGIUM, DENMARK, THE FEDERAL REPUBLIC OF GERMANY, FRANCE, GREECE, IRELAND, ITALY, LUXEMBOURG, THE NETHERLANDS, AND THE UNITED KINGDOM

Notice of Institution of Preliminary Countervailing Duty Investigations and Scheduling of Conference

AGENCY: United States International Trade Commission.

ACTION: Institution of preliminary countervailing duty investigations to determine whether there is a reasonable indication that an industry in the United States is materially injured, or is threatened with material injury, or the establishment of an industry is materially retarded, by reason of allegedly subsidized imports from Belgium (Inv. No. 701–TA–69); Denmark (Inv. No. 701–TA–70); the Federal Republic of Germany (Inv. No. 701–TA–71); France (Inv. No. 701–TA–72); Greece (Inv. No. 701–TA–73); Ireland (Inv. No. 701–TA–74); Italy (Inv. No. 701–TA–75); Luxembourg (Inv. No. 701–TA–76); The Netherlands (Inv. No. 701–TA–77); and the United Kingdom (Inv. No. 701–TA–78) of sodium gluconate, provided for in item 437.52 of the Tariff Schedules of the United States.

EFFECTIVE DATE: June 16, 1981.

FOR FURTHER INFORMATION CONTACT: John MacHatton, Supervisory Investigator (202–523–0439).

SUPPLEMENTARY INFORMATION:

Background. These investigations are being instituted following receipt of a petition on June 16, 1981, filed by Pfizer, Inc., New York, New York. The petition alleges that the European Economic Community provides subsidies for the production and exportation of sodium gluconate, and that, by reason of imports of this allegedly subsidized product, an industry in the United States is being materially injured or threatened with material injury.

Authority. Section 703(a) of the Tariff Act of 1930 (19 U.S.C. 1671b) requires the Commission to make a determination of whether there is a reasonable indication that an industry in the United States is materially injured, or is threatened with material injury, or the establishment of an industry in the United States is materially retarded, by reason of imports of the merchandise which is the subject of the investigation by the administering authority. Such a determination must be made within 45 days after the date on which a petition is filed under section 702(b) or on which notice is received from the Department of Commerce of an investigation commenced under section 702(a). Accordingly, the Commission, on June 19, 1981, instituted preliminary countervailing duty investigations Nos. 701–TA–69 thru 78. These investigations will be subject to the provisions of part 207 of the Commission's Rules of Practice and Procedure (19 CFR 207, 44 F.R. 76457) and particularly, subpart B thereof.

Written submissions. Any person may submit a written statement of information pertinent to the subject matter of these investigations to the Commission on or before July 20, 1981. A signed original and nineteen copies of such statements must be submitted.

Any business information which a submitter desires the Commission to treat as confidential shall be submitted separately and each sheet must be clearly marked at the top "Confidential Business Data". Confidential submissions must conform with the requirements of section 201.6 of the Commission's Rules of Practice and Procedure (19 CFR 201.6). All written submissions, except for confidential business data, will be available for public inspection.

Conference. The Director of Operations of the Commission has scheduled a conference in connection with these investigations for 10:00 a.m., e.d.t., on July 14, 1981, at the U.S. International Trade Commission Building, 701 E Street NW., Washington, D.C. Parties wishing to participate in the conference should contact the Supervisory Investigator for these investigations, Mr. John MacHatton (202–

523–0439). It is anticipated that parties in support of the petition for countervailing duties and parties opposed to such petition will each be collectively allocated one hour withtin which to make an oral presentation at the conference. Further details concerning the conduct of the conference will be provided by the Supervisory Investigator.

Inspection of petition. The petition filed in this case is available for public inspection at the Office of the Secretary, U.S. International Trade Commission.

By order of the Commission.

Issued: June 22, 1981.

KENNETH R. MASON,
Secretary.

[332–73]

NOTICE OF RELEASE FOR PUBLIC COMMENT OF PROVISIONALLY ADOPTED CHAPTERS OF THE HARMONIZED COMMODITY DESCRIPTION AND CODING SYSTEM

AGENCY: United States International Trade Commission.

ACTION: Release for public comment, pursuant to Commission investigation No. 332–73, under the authority of section 332 (g) of the Tariff Act of 1930, as amended, of drafts of the following chapters of the Harmonized Commodity Description and Coding System (Harmonized System) as provisionally adopted by the Harmonized System Committee and the Nomenclature Committee of the Customs Cooperation Council.

Chapter 39: Plastics and articles thereof
Chapter 40: Rubber and articles thereof
Chapter 50: Silk
Chapter 51: Wool, fine or coarse animal hair; horsehair yarn and woven fabric
Chapter 52: Cotton
Chapter 53: Other vegetable textile fibres; paper yarn and woven fabrics of paper yarn
Chapter 54: Man-made filaments
Chapter 55: Man-made staple fibres
Chapter 56: Wadding, felt and nonwovens; special yarns; twine, cordage, ropes and cables and articles thereof
Chapter 57: Carpets and other textile floor coverings
Chapter 58: Special woven fabrics; tufted textile fabrics; lace; tapestries; trimmings; embroidery
Chapter 59: Impregnated, coated, covered or laminated textile fabrics; elastic textile fabrics; textile articles of a kind suitable for industrial use
Chapter 60: Knitted or crocheted fabrics

Chapter 61: Articles of apparel and clothing accessories, knitted or crocheted
Chapter 62: Articles of apparel and clothing accessories, not knitted or crocheted
Chapter 63: Other made up textile articles; Worn clothing and worn textile articles; rags
Chapter 86: Railway and tramway locomotives, rolling-stock and parts thereof; railway and tramway track fixtures and fittings; traffic signalling equipment of all kinds (not electrically powered)
Chapter 87: Vehicles other than railway or tramway rolling-stock, and parts thereof
Chapter 88: Aircraft and parts thereof
Chapter 89: Ships, boats, and floating structures
Chapter 90: Optical, photographic, cinematographic, measuring, checking, precision, medical and surgical instruments and apparatus; parts thereof
Chapter 91: Clocks and watches and parts thereof
Chapter 92: Musical instruments; parts thereof
Chapter 96: Miscellaneous manufactured articles [1]
Chapter 97: Toys, games and sports requisites; parts thereof

WRITTEN SUBMISSIONS: Parties wishing to submit written comments should do so by July 30, 1981.

HEARING: Parties desiring the Commission to hold a hearing on these draft chapters of the Harmonized System should contact the Secretary of the Commission by July 15, 1981, and show good cause for holding a hearing.

COPIES OF DOCUMENTS: Copies of the chapters which are the subject of this notice are available for public inspection at the offices of the Commission, 701 E Street, NW., Washington, D.C. 20436. The Commission will also send copies to interested parties upon request.

FOR FURTHER INFORMATION CONTACT: Eugene A. Rosengarden, Director, Office of Tariff Affairs, U.S. International Trade Commission, 701 E Street, NW., Washington, D.C. 20436, Telephone: 202/523-0370.

SUPPLEMENTARY INFORMATION: In its public notices of February 8, 1980 (45 F.R. 9828 of February 13, 1980), March 21, 1980 (45 F.R. 19696 of March 26, 1980), and August 15, 1980 (45 F.R. 55549 of August 20, 1980) the Commission identified 68 chapters of the Harmonized Commodity Description and Coding System (Har-

[1] Former chapters 95, 96, and 98.

monized System) for which texts had been provisionally adopted by the Harmonized System and Nomenclature Committees of the Customs Cooperation Council. The purpose of the above mentioned notices was to invite comments and views of interested parties with respect to the 68 chapters.

Since the release of the August 15, 1980 notice, provisionally adopted texts of 25 further chapters have been published by the Customs Cooperation Council. This notice hereby amends the previous notice by adding these 25 new chapter texts to the list of texts released for public comment.

This notice is being issued pursuant to Commission investigation No. 332–73, instituted on January 31, 1975 (40 F.R. 6329), under section 332(g) of the Tariff Act of 1930. The investigation was initiated in accordance with section 608(c) of the Trade Act of 1974, which provides, in part, that the Commission shall institute an investigation which would provide the basis for—

> (2) full and immediate participation by the United States International Trade Commission in the United States contribution to technical work of the Harmonized Systems [sic] Committee under the Customs Cooperation Council to assure the recognition of the needs of the United States business community in the development of a Harmonized Code reflecting sound principles of commodity identification and specification and modern producing methods and trading practices * * *.

The Harmonized System is being developed by the Customs Cooperation Council (CCC), a 91-member international organization with headquarters in Brussels, as an international commodity classification system which will be adaptable for modernized customs tariff nomenclature purposes and for recording, handling, and reporting of transactions in international trade. The Harmonized System will be based on, and in many respects will be an extension of, the Customs Cooperation Council Nomenclature (CCCN), formerly known as the Brussels Tariff Nomenclature (BTN).

The Technical Team, working under auspices of the CCC, prepared drafts of the various chapters of the Harmonized System for consideration by the Harmonized System Committee, which was established in order to develop the system. These drafts were forwarded to the members and observers of the Committee for their review and submission of written comments. The Committee met three times a year to consider these drafts and the written comments and presentations of the various delegations. The review of a particular chapter or group of chapters often extended to more than one meeting.

In its public notices of May 4, 1976 (41 F.R. 18716 of May 6, 1976), August 9, 1976 (41 F.R. 34370 of August 13, 1976), December 20, 1976

(41 F.R. 55948 of December 23, 1976), September 1, 1977 (42 F.R. 44852 of September 7, 1977), February 7, 1978 (43 F.R. 5902 of February 10, 1978), October 16, 1978 (43 F.R. 48723 of October 19, 1978), February 14, 1979 (44 F.R. 10435 of February 20, 1979), May 16, 1979 (44 F.R. 29740 of May 22, 1979), September 5, 1979 (44 F.R. 53112 of September 12, 1979), January 28, 1980 (45 F.R. 7648 of February 4, 1980), February 1, 1980 (45 F.R. 8168 of February 6, 1980), May 20, 1980 (45 F.R. 36231 of May 29, 1980), May 23, 1980 (45 F.R. 36230 of May 29, 1980), and August 20, 1980 (45 F.R. 57228 of August 27, 1980) the Commission identified those chapters which had been considered by the Harmonized System Committee, and the chapters for which a Technical Team draft had been released.

Following its deliberations on the draft chapters, the Harmonized System Committee forwarded recommended texts for the chapters to the Nomenclature Committee. The Nomenclature Committee, which supervises the operations of the Convention on Nomenclature for the Classification of Goods in Customs Tariffs and is responsible for ensuring international uniformity in the interpretation and application of the CCCN, reviews the recommended texts for the Harmonized System and returns the draft chapters which it has approved to the Harmonized System Committee. The draft chapters which have thusly been provisionally approved by both committees are then held in abeyance pending final revision sessions. The Harmonized System Committee began final revision sessions in May 1981.

The draft chapters released for public comment today have been provisionally adopted by the Harmonized System Committee and the Nomenclature Committee according to the above described procedure and are on the Harmonized System Committee's agenda for the October 1981 revision session. As further chapters are adopted, the Commission will issue future notices requesting public comment.

In 1971, the Department of the Treasury established an Interagency Advisory Committee on Customs Cooperation Council Matters in order to provide a basis for interested Federal agencies to participate with respect to CCC matters. In order to establish and develop U.S. programs and policies with respect to the Harmonized System, the interagency committee has instituted procedures which take into account the provisions of section 608(c) of the Trade Act of 1974, which call for the Commission to contribute to the U.S. technical input to the Harmonized System Committee. Under these procedures the Commission is preparing technical comments and proposals on the various chapters of the Harmonized System for consideration by the interagency committee in the determination of U.S. proposals with respect to the Harmonized System. In making proposals, the Commission is seeking and taking into consideration the views of

trade and industry and other interested parties and of interested Government agencies.

By order of the Commission.

Issued: June 24, 1981.

KENNETH R. MASON,
Secretary.

In the Matter of	
CERTAIN HEADBOXES AND PAPERMAKING MACHINE FORMING SECTIONS FOR THE CONTINUOUS PRODUCTION OF PAPER, AND COMPONENTS THEREOF	Investigation No. 337-TA-82A

Notice of Investigation, Scope and Procedures for Conduct of Investigation, Schedule for Filing Written Submissions on Relief, Bonding, and the Public Interest, and Requesting a Public Hearing

AGENCY: U.S. International Trade Commission.

ACTION: Institution of investigation pursuant to 19 U.S.C. 1337; request for written submissions regarding relief, bonding, and the public interest.

SUMMARY: On March 23, 1981, the Commission determined by a 3-tc-1 vote (Commissioner Stern dissenting) that there is a violation of section 337 of the Tariff Act of 1930 in the importation and sale of certain multi-ply headboxes and papermaking machine forming sections for the continuous production of paper and components thereof which infringe and contribute to or induce the infringement of claims 1, 12, 15, 16, and 22 of U.S. Letters Patent RE 28,269 and claims 4, 5, and 6 of U.S. Letters Patent 3,923,593, the tendency of which is to substantially injure a domestic industry efficiently and economically operated in the United States. Having also determined that the statutory public-interest considerations did not preclude relief and that an exclusion order was the appropriate remedy, the Commission subsequently issued an order barring the subject merchandise from entry into the United States for the remaining term of the patents, except under license, but permitting the excluded articles to enter under a 100 percent *ad valorem* bond until such time as the President approved or disapproved the Commission's action. (46 F.R. 22083; see also USITC Publication 1138 (April 1981).) [1]

---

[1] Chairman Alberger dissented from the majority's remedy determination, stating that a cease and desist order directed solely to the respondents found to be in violation would be more appropriate. See the Views of Chairman Bill Alberger regarding Remedy and the Public Interest, USITC Publication 1138 (April 1981).

On June 8, 1981, the President disapproved the Commission's determination for policy reasons relating to the scope of the exclusion order and its potential adverse impact. Although the President disapproved the Commission's determination, he pointed out that such disapproval did not mean that the patent holder was not entitled to relief, and that an exclusion order directed only to the products of the respondents or a narrowly drawn cease and desist order would have been justifiable and appropriate in light of the facts and circumstances in this case. Lacking the authority to revise the Commission's remedy, the President urged the Commission to take such action expeditiously on its own initiative. (See 46 F.R. 32361.)

AUTHORITY: The authority for institution of this investigation is contained in section 337 of the Tariff Act of 1930 and in section 210.10(b) of the Commission's Rules of Practice and Procedure (19 CFR 210.10(b)).

SCOPE OF THE INVESTIGATION: As a result of the President's disapproval of the Commission's determination in the matter of certain headboxes and papermaking machine forming sections for the continuous production of paper, and components thereof, investigation No. 337–TA–82, and on the basis of the recommendation contained in the statement of disapproval, on June 23, 1981, the U.S. International Trade Commission ordered (Commissioner Stern dissenting) that—

(1) Pursuant to subsection (b) of section 337 of the Tariff Act of 1930 (19 U.S.C. 1337), an investigation be instituted to determine whether there is a violation of subsection (a) of this section in the unauthorized importation of certain headboxes and papermaking machine forming sections for the continuous production of paper, and components thereof, into the United States, or in their sale, because (1) such headboxes and papermaking machine forming sections are allegedly covered by claims 1, 12, 15, 16, and 22 of U.S. Letters Patent RE 28,269, claims 4, 5, and 6 of U.S. Letters Patent No. 3,923,593, and (2) such components allegedly contribute to and induce infringement of the aforementioned claims of the patents, the effect or tendency of which is to destroy or substantially injure an industry, efficiently and economically operated, in the United States;

(2) For the purpose of this investigation so instituted, the following are hereby named as parties upon which this notice of investigation shall be served:

(a) The complainant is—

Beloit Corporation
1 St. Lawrence Avenue
Beloit, Wis. 53511

(b) The respondents are the following companies, alleged to be in violation of section 337, and are the parties upon which the notice of investigation is to be served:

Aktiebolaget Karlstads
Mekaniska Werkstad
Fack S–651 01,
Karlstad, Sweden

KMW Johnson, Inc.
5821 Park Road
Charlotte, N.C. 28209

(c) Louis S. Mastriani, Esq., Unfair Import Investigations Division, U.S. International Trade Commission, 701 E Street NW., Room 132, Washington, D.C. 20436, shall be the Commission Investigative Attorney, and a party to this investigation.

SUPPLEMENTARY INFORMATION:

(1) The new investigation encompasses the same issues, parties, and subject matter as investigation No. 337–TA–82, except that—

(a) in the absence of new allegations of section 337 violations, or new evidence regarding the allegations which were the basis of investigation No. 337–TA–82, the new inquiry shall be limited to the issues of the appropriate remedy, the public interest, and the value of the bond, if any, which should be imposed during the 60-day period for review by the President,

(b) Scott Paper Co., a nominal participant and respondent in investigation No. 337–TA–82, has not been named as a party to the new investigation, and

(c) the only respondents are the KMW companies listed above.

(2) The evidence and information concerning the elements of a section 337 violation, (i.e., the unfair trade practices and unfair methods of competition alleged, the domestic industry affected, the efficiency and economy of its operations, and the effect or tendency of the unfair acts and methods to destroy or substantially injure the domestic industry) which are on the record developed during the course of investigation No. 337–TA–82, shall be incorporated into the record developed in this new proceeding by reference.

(3) No issue concerning the violation of section 337 which was previously addressed in connection with investigation No. 337–TA–82, shall be relitigated by the parties unless—

(a) within twenty (20) days after the date on which the new investigation is instituted, a party files a petition which either alleges new violations of section 337 or presents new evidence concerning the

previously alleged violation and shows good cause for relitigating the issues in question, and

(b) the Commission grants the petition.

Written Submissions on Remedy, Bonding, and the Public Interest

If the Commission finds that a violation of section 337 has occurred, it may issue (1) an order which could result in the exclusion of the subject articles from entry into the United States and/or (2) an order which could result in one or more respondents being required to cease and desist from engaging in unfair methods of competition or unfair acts in the importation and sale of such articles.

If the Commission concludes that a violation of section 337 has occurred and contemplates some form of relief, it must consider the effect of that relief upon the public-interest. The factors which the Commission will consider include the effect that an exclusion order and/or a cease and desist order would have upon (1) the public health and welfare, (2) competitive conditions in the U.S. economy, (3) the U.S. production of articles which are like or directly competitive with those which are the subject of the investigation, and U.S. consumers.

If the Commission finds that a violation of section 337 has occurred and orders some form of relief, the President has 60 days to approve or disapprove the Commission's action. During this period, the subject articles would be entitled to enter the United States under a bond in an amount determined by the Commission and prescribed by the Secretary of the Treasury.

In order to give greater focus to the Commission's deliberations in connection with this investigation, interested members of the public and other government agencies are invited to submit written comments and the parties to the investigation and the Commission investigative attorney are required to file briefs discussing (1) the appropriate remedy, if any, (2) the impact that such relief would have upon the public-interest considerations enumerated above, and (3) the amount of the bond, if any, which should be imposed during the 60-day period for the President to review the Commission's determination.

Request for Hearing

No public hearing is presently scheduled in this matter, however written requests for such a hearing will be considered by the Commission. Such requests must be received by the Office of the Secretary within 2 weeks after the date on which this notice is published. The requests must state in detail the reasons why a hearing is necessary and the reasons why the issues in question cannot be addressed adequately by means of written submissions. If the Commission grants

such requests, the hearing will be held on or about Tuesday, August 18, 1981.

ADDITIONAL INFORMATION: The original copy and 11 true copies of all written comments and briefs must be filed with the Office of the Secretary no later than August 11, 1981. Any person desiring to discuss confidential information at the hearing (if such proceedings are requested and the Commission grants the request), or to submit a document (or a portion thereof) to the Commission in confidence, must request *in camera* treatment unless the information has already been granted such treatment by the presiding officer. All such requests should be directed to the Secretary to the Commission and must include a full statement of the reasons why the Commission should grant such treatment. Documents or arguments containing confidential information approved by the Commission for *in camera* treatment will be treated accordingly. All nonconfidential written submissions filed pursuant to this notice, as well as all nonconfidential documents on the record of investigation No. 337–TA–82 in the matter of certain headboxes and papermaking machine forming sections for the continuous production of paper, and components thereof will be available for public inspection at the Secretary's Office during official business hours (8:45 a.m. to 5:15 p.m.).

FOR FURTHER INFORMATION CONTACT: Louis S. Mastriani, Esq., U.S. International Trade Commission, telephone 202–523–0489.

By order of the Commission.

Issued: June 24, 1981.

KENNETH R. MASON,
Secretary.

In the Matter of
CERTAIN COIN-OPERATED AUDIO-VISUAL GAMES AND COMPONENTS THEREOF } Investigation No. 337–TA–87

Notice of Issuance of Exclusion Order

AGENCY: U.S. International Trade Commission.

ACTION: Issuance of exclusion order

SUMMARY: On June 25, 1981, the Commission issued an Action and Order and Opinion in the above-captioned investigation. The Commission ordered that certain coin-operated audio-visual games kits and components thereof which infringe complainants copyright or common-law trademark or bear false designation of origin be excluded from entry into the United States.

SUPPLEMENTARY INFORMATION: The Commission instituted this investigation and published notice thereof in the Federal Register of June 25, 1981 (45 F.R. 124) to determine whether there is a violation of section 337 of the Tariff Act of 1930 (19 U.S.C. § 1337) in connection with the importation into the United States and the sale therein of certain coin-operated audio-visual games, kits and components thereof.

On June 9, 1981, at a public meeting, the Commission unanimously determined that there is a violation of section 337 in the unauthorized importation and sale of certain coin-operated audio-visual games, kits and components thereof which infringe complainant's copyrights or common-law trademark, or bear false designation of origin. The Commission determined that the appropriate remedy is an order directing that the articles in question be excluded from entry into the United States.

Copies of the Commission's Action and Order, the Commission Opinion, and any other public documents on the record in this investigation are available for inspection by the public during official working hours (8:45 a.m. to 5:15 p.m.) in the Office of the Secretary, U.S. International Trade Commission, 701 E Street NW., Room 161, Washington, D.C. 20436, telephone 202–523–0161.

FOR FURTHER INFORMATION CONTACT: Clarease E. Mitchell, Esq., Office of the General Counsel, U.S. International Trade Commission, telephone 202–523–0148.

By order of the Commission.

Issued: June 25, 1981.

KENNETH R. MASON,
Secretary.

Notice of Investigation (332–128)

THE IMPLICATIONS OF RECENT TECHNOLOGICAL CHANGES ON WATCH PRODUCTION

AGENCY: United States International Trade Commission.

ACTION: In accordance with the provisions of section 332 of the Tariff Act of 1930 (19 U.S.C. 1332), the Commission has instituted investigation No. 332–128 for the purpose of gathering and presenting information on the implications of technological changes on watch production. The emergence of electronic watches is having an impact on the entire watch industry and on conditions of competition and trade patterns in these products. This study will highlight recent developments in the watch industry, such as the introduction of low-priced quartz analog watches and significant drop in U.S. production

of all watches, and will show the effect of these developments on the watch assembly industry in the U.S. Insular Possessions.

EFFECTIVE DATE: June 22, 1981.

FOR FURTHER INFORMATION CONTACT: Mr. Walter S. Trezevant or Mrs. Cynthia Wilson, General Manufactures Division, U.S. International Trade Commission, Washington, D.C. 20436 (Phone 202–724–1719 or 202–724–1731).

WRITTEN SUBMISSIONS: Since there will be no public hearing scheduled for this study, written submissions from interested parties are invited concerning any phase of the study. Commercial or financial information which a party desires the Commission to treat as confidential must be submitted on separate sheets of paper, each clearly marked "Confidential Business Information" at the top. All submissions requesting confidential treatment must conform with the requirements of section 201.6 of the Commission's Rules of Practice and Procedure (19 CFR 201.6). All written submissions, except for confidential business information, will be made available for inspection by interested persons. To be assured of consideration by the Commission in this study, written statements should be submitted at the earliest practicable date, but no later than November 15, 1981. All submissions should be addressed to the Secretary of the Commission's office in Washington, D.C.

By order of the Commission.

Issued: June 25, 1981.

KENNETH R. MASON,
Secretary.

Index

U.S. Customs Service

	T.D.No.
Treasury Decisions: Foreign Currencies; Variance From Quarterly Rate—June 15–19, 1981	81–178
	C.A.D.No.
Decisions of The United States Court of Customs and Patent Appeals: *United States* v. *Siemens America, Inc. and Siemens Corporation*	1266

DEPARTMENT OF THE TREASURY
U.S. CUSTOMS SERVICE
WASHINGTON, D.C. 20229

OFFICIAL BUSINESS
PENALTY FOR PRIVATE USE, $300

POSTAGE AND FEES PAID
DEPARTMENT OF THE TREASURY (CUSTOMS)
(TREAS. 552)

U.S. GOVERNMENT PRINTING OFFICE : 1981

15/29

Customs Bulletin

Regulations, Rulings, Decisions, and Notices concerning Customs and related matters

and Decisions

of the United States Court of Customs and Patent Appeals and the United States Court of International Trade

Vol. 15 JULY 22, 1981 No. 29

NEWARK PUBLIC LIBRARY

AUG – 5 1981

U. S. GOVT. PUBS.
DEPOSITORY 376

This issue contains

T.D. 81–179 Through 81–183
Erratum
General Notice
Protest Abstracts P81/90 Through P81/106
Reap. Abstracts R81/234 Through R81/245
International Trade Commission Notices

THE DEPARTMENT OF THE TREASURY
U.S. Customs Service

T1.11/3:

NOTICE

The abstracts, rulings, and notices which are issued weekly by the U.S. Customs Service are subject to correction for typographical or other printing errors. Users may notify the U.S. Customs Service, Logistics Management Division, Washington, D.C. 20229, of any such errors in order that corrections may be made before the bound volumes are published.

For sale by the Superintendent of Documents, U.S. Government Printing Office, Washington, D.C. 20402. Price: $2.25 (single copy domestic); $2.85 (single copy foreign). Subscription price: $85.00 a year domestic; $106.25 a year foreign.

U.S. Customs Service

Treasury Decisions

(T.D. 81–179)

Bonds

Approval and discontinuance of Carrier's Bonds, Customs Form 3587.

Bonds of carriers for the transportation of bonded merchandise have been approved or discontinued as shown below. The symbol "D" indicates that the bond previously outstanding has been discontinued on the month, day, and year represented by the figures which follow. "PB" refers to a previous bond, dated as represented by figures in parentheses immediately following, which has been discontinued. If the previous bond was in the name of a different company or if the surety was different, the information is shown in a footnote at the end of the list.

Dated: July 2, 1981.

Name of principal and surety	Date of bond	Date of approval	Filed with district director/area director/amount
Akers Motor Lines, Inc., P.O. Box 34303, Charlotte, NC; motor carrier; United National Ins. Co.	Mar. 16, 1981	May 5, 1981	Wilmington, NC $25,000
Whaling City Trucking, d.b.a.: Associated North American, 925 Cranston St., Cranston, RI; motor carrier; Hartford Accident and Indemnity Corp.	Sept. 24, 1980	Apr. 1, 1981	Providence, RI $25,000
Comet Truck Line, Inc., P.O. Box 3175, Baton Rouge, LA; motor carrier; Fidelity & Deposit Co. of MD.	Apr. 28, 1981	May 13, 1981	New Orleans, LA $25,000
Ditto Freight Lines, Inc., 1575 Industrial Ave., San Jose, CA; motor carrier; Fireman's Fund Ins. Co. (PB 4/26/74) D 3/23/81 [1]	Oct. 22, 1979	Mar. 23, 1981	San Francisco, CA $25,000
E & B Transportation Co., Inc., P.O. Box 543, Providence, RI; motor carrier; Hartford Accident & Indemnity Corp.	Oct. 14, 1980	Apr. 1, 1981	Providence, RI $25,000
Fowler & Williams, Inc., 1300 Meylert Ave., Scranton, PA; motor carrier; Nationwide Mutual Ins. Co.	Mar. 24, 1981	Apr. 22, 1981	New York Seaport $50,000

See footnotes at end of table.

Name of principal and surety	Date of bond	Date of approval	Filed with district director/area director/amount
R. J. Franks Transport Ltd., 59 Maple St., Alliston, Ontario, Canada; motor carrier; Royal Ins. Co. of America. (PB 5/1/78) D 5/1/81 [2]	May 1, 1981	May 1, 1981	Buffalo, NY $25,000
Frederickson Motor Express Corp., P.O.B. 21098, Charlotte, NC; motor carrier; United States Fire Ins. Co. (PB 3/24/80) D 3/24/81 [3]	Mar. 24, 1981	Mar. 25, 1981	Wilmington, NC $25,000
Golden Chariot Truck Line, Inc., 7952 Armour St., San Diego, CA; motor carrier; St. Paul Fire & Marine Ins. Co. (PB 10/5/76) D 3/30/81	Mar. 30, 1981	Apr. 3, 1981	San Diego, CA $50,000
Graf Brothers, Inc., 180 Main St. Salisbury, MA; motor carrier; Maryland Casualty Co. D 11/13/76	Nov. 13, 1967	Nov. 29, 1967	Boston, MA $50,000
Kain's Motor Service Corp., US Highway 24 West, Logansport, IN; motor carrier; Hanover Ins. Co. (PB 3/29/77) D 4/9/81 [4]	Mar. 29, 1981	Apr. 9, 1981	Chicago, IL $25,000
Lehman Cartage, Inc., 1821 Middle Ave., Elyria, OH; motor carrier; The Travelers Indemnity Co. D 5/7/81	May 17, 1972	May 25, 1972	Cleveland, OH $25,000
Ligon Specialized Hauler, Inc., Highway 85 East, P.O. Box Drawer I., Madisonville, KY; motor carrier; Safeco Ins. Co. of America	Mar. 26, 1981	Apr. 1, 1981	Cleveland, OH $50,000
Merry Shipping Co., P.O. Building, Yonge's Island, SC; water carrier; Ins. Co. of North America	Aug. 20, 1979	Nov. 14, 1979	Charleston, SC $50,000
Norris Brothers Co., Inc., 2138 Davenport Ave., Cleveland, OH; motor carrier; The Aetna Casualty & Surety Co. (PB 8/16/68) D 4/21/81	Apr. 15, 1981	Apr. 21, 1981	Cleveland, OH $50,000
G. M. Patry Ltd., P.O. Box 278, Dorval, P.Q., Canada, motor carrier; Reliance Ins. Co.	Jan. 6, 1981	Apr. 13, 1981	Ogdensburg, NY $100,000
Andre Perrault, Ltd., P.O. Box 188, Winooski, VT; motor carrier; St. Paul Fire & Marine Ins. Co.	Mar. 16, 1981	Apr. 21, 1981	St. Albans, VT $50,000
Quinn Freight Lines, Inc., 1099 North Montello St., Brockton, MA; motor carrier; The Aetna Casualty & Surety Co. (PB 8/8/80) D 3/9/81 [5]	Dec. 17, 1980	Apr. 16, 1981	Boston, MA $50,000
Sever Yarn Express, Inc., 1117 S. Clarkson St., Charlotte, NC; motor carrier; The Travelers Indemnity Co.	Jan. 30, 1981	Apr. 17, 1981	Wilmington, NC $25,000
Spector Red Ball, 3177 Irving Blvd., Dallas, TX; motor carrier; The Aetna Casualty & Surety Co.	Apr. 16, 1981	....do.....	Dallas/Ft. Worth, TX $25,000
Standard Trucking Co., P.O. Box 1107, Charlotte, NC; motor carrier; Federal Ins. Co. (PB 3/11/70) D 3/22/81 [6]	Mar. 11, 1981	Mar. 24, 1981	Wilmington, NC $25,000

See footnote at end of table.

Name of principal and surety	Date of bond	Date of approval	Filed with district director/area director/amount
G. Gordon Anderson Trustee for TMT Trailer Ferry, Inc., 1721 NE. Miami Court, Miami, FL; motor and water carrier; Fidelity & Deposit Co. of MD D 12/6/69	Dec. 6, 1964	Dec. 23, 1964	Miami, FL $50,000
Whaling City Trucking (See d.b.a.: Associated North American)			

1 Surety is Insurance Co. of North America.
2 Surety is Fireman's Fund Ins. Co.
3 Surety is The Travelers Indemnity Co.
4 Surety is Fidelity & Deposit Co. of MD.
5 Surety is Royal Indemnity Co.
6 Surety is The Aetna Casualty & Surety Co.

BON-3-03

MARILYN G. MORRISON
Director,
Carriers, Drawback and Bonds Division.

(T.D. 81-180)

Synopses of drawback decisions

The following are synopses of drawback rates issued February 26, 1981, to June 10, 1981, inclusive, pursuant to sections 22.1 through 22.5, inclusive, Customs Regulations.

In the synopses below are listed for each drawback rate approved under 19 U.S.C. 1313 (a) and (b), the name of the company, the specified articles on which drawback is authorized, the merchandise which will be used to manufacture or produce these articles, the factories where the work will be accomplished, the date the statement was signed, the basis for determining payment, the Regional Commissioner to whom the rate was forwarded, and the date on which it was forwarded.

Dated: July 6, 1981
(DRA-1-09)

GEORGE C. STEUART
(For Marilyn G. Morrison, Director,
Carriers, Drawback and Bonds Division).

(A) Company: Air Products and Chemicals, Inc.
Section 1313(a) articles: Dabco; Dabco 33-LV; Dabco WT.
Section 1313(a) merchandise: N,-hydroxyethylpiperazine.

Section 1313(b) articles: Dabco; Dabco 33–LV; Dabco WT.
Section 1313(b) merchandise: N,-hydroxyethylpiperazine.
Factory: Paulsboro, NJ.
Statement signed: August 11, 1980.
Basis of claim: Used in, less valuable waste.
Rate forwarded to Regional Commissioner of Customs: Baltimore, February 26, 1981.

(B) Company: Allis-Chalmers Corp.
Section 1313(a) articles: Tractors, implements, combines, and various other listed machinery.
Section 1313(a) merchandise: Castings and forgings in rough or finished condition.
Section 1313(b) articles: Tractors, implements, combines and various other listed machinery.
Section 1313(b) merchandise: Hot-rolled steel plate; rough and finished castings and forgings.
Factories: Various factories as listed in manufacturer's statement.
Statement signed: March 2, 1981.
Basis of claim: Appearing in as to steel plate and finished castings and forgings; used in, less valuable waste as to rough castings and forgings.
Rate forwarded to Regional Commissioner of Customs: Chicago, April 21, 1981.
Revokes: T.D. 54452–J, as amended by 55765–I, 68–101–J, 72–152–P, 73–9–C, 73–88–J, 73–342–A; T.D. 44232–S; T.D. 54893–H; and T.D. 73–50–A.

(C) Company: Ampex Corp., a wholly-owned subsidiary of Signal Companies, Inc.
Section 1313(a) articles: Electronic equipment.
Section 1313(a) merchandise: Electronic assemblies, electronic sub-assemblies, television camera lenses, camera pick-up tubes, core memories, electronic cables, harnesses and other electronic devices.
Section 1313(b) articles: Electronic equipment.
Section 1313(b) merchandise: Electronic assemblies, electronic cables, electronic harnesses, printed wiring assemblies, extender board assemblies, modular assemblies, electronic chassis assemblies and other electronic devices.
Factories: Opeliha, AL; Redwood City, Sunnyvale, and El Segundo, CA; Colorado Springs and Wheat Ridge, CO; Elk Grove Village, IL.
Statement signed: March 2, 1981.
Basis of claim: Appearing in.

Rate issued by Regional Commissioner of Customs in accordance with section 22.4(o)(2): San Francisco, March 23, 1981.
Revokes: Unpublished Headquarter's authorization letter dated June 11, 1979, to cover successorship from Ampex Corp.

(D) Company: Cadillac Products, Inc.
Section 1313(a) articles: Coated woven polyethylene fabric.
Section 1313(a) merchandise: Woven polyethylene fabric.
Section 1313(b) articles: Carpet covers or protecting covers.
Section 1313(b) merchandise: Coated woven polyethylene fabric.
Factories: Sterling Heights and Rogers City, MI.
Statement signed: April 1, 1981.
Basis of claim: Appearing in under section 1313(a); Used in under section 1313(b).
Rate forwarded to Regional Commissioner of Customs: New York, June 5, 1981.

(E) Company: Corporacion Sublistatica, S.A.
Section 1313(a) articles: Printed paper for textiles (decalcomania).
Section 1313(a) merchandise: Color pigments.
Section 1313(b) articles: Printed paper for textiles (decalcomania).
Section 1313(b) merchandise: Color pigments (dispersed) and machine coated printing paper.
Factory: Isabela, PR.
Statement signed: January 7, 1980.
Basis of claim: Used in, less valuable waste as to paper: Used in as to pigments.
Rate forwarded to Regional Commissioner of Customs: Miami, March 9, 1981.

(F) Company: Devoe Marine Coatings Co.
Section 1313(a) articles: Marine anti-fouling paints.
Section 1313(a) merchandise: Cuprous oxide.
Section 1313(b) articles: Marine anti-fouling paints.
Section 1313(b) merchandise: Cuprous oxide.
Factories: Pennsauken, NJ; Riverside, CA.
Statement signed: September 22, 1980.
Basis of claim: Used in.
Rate forwarded to Regional Commissioner of Customs: Baltimore, May 14, 1981.

(G) Company: Disston, Division of Sandvik, Inc.
Section 1313(a) articles: Metal band saws.

Section 1313(a) merchandise: Carbon metal band saw steel and bi-metal band saw steel.
Section 1313(b) articles: Metal band saws.
Section 1313(b) merchandise: Carbon metal band saw steel and bi-metal band saw steel.
Factory: Danville, VA.
Statement signed: September 4, 1980.
Basis of claim: Appearing in.
Rate forwarded to Regional Commissioner of Customs: New York, February 26, 1981.

(H) Company: Fiat-Allis Construction Machinery, Inc.
Section 1313(a) articles: Construction machinery, accessories, sub-assemblies, and parts.
Section 1313(a) merchandise: Castings and forgings.
Section 1313(b) articles: Construction machinery, accessories, sub-assemblies, and parts.
Section 1313(b) merchandise: Castings and forgings.
Factories: Deerfield and Springfield, IL.
Statement signed: January 22, 1981.
Basis of claim: Appearing in as to finished machined castings and forgings; Used in, less valuable waste as to rough or semi-finished castings and forgings.
Rate forwarded to Regional Commissioner of Customs: Chicago, March 5, 1981.

(I) Company: Fruit Growers Express Co.
Section 1313(a) articles: Rail cars.
Section 1313(a) merchandise: Diesel engines and related components, repair kits and tool kits; caboose valves with appropriate systems, including hoses, angle cocks and couplings; screw couplers; modified buffers; draft gears; caboose truck castings, sideframes, bolsters and transoms; freight car truck castings; i.e., sideframes and bolsters; loose rail car wheels and mounted wheelsets.
Section 1313(b) articles: Rail cars.
Section 1313(b) merchandise: Diesel engines and related components, repair kits and tool kits; caboose valves with appropriate systems, including hoses, angle cocks and couplings; screw couplers; modified buffers; draft gears; caboose truck castings, sideframes, bolsters and transoms; freight car truck castings; i.e., sideframes and bolsters; loose rail car wheels and mounted wheelsets.
Factory: Alexandria, VA.
Statement signed: April 24, 1981.
Basis of claim: Appearing in.
Rate forwarded to Regional Commissioner of Customs: Baltimore, June 2, 1981.

(J) Company: Hartford Division, Emhart Industries, Inc.
Section 1313(a) articles: Glass container machinery, tools, and assemblies.
Section 1313(a) merchandise: Components for glass container machinery.
Section 1313(b) articles: Glass container machinery, tools, and assemblies.
Section 1313(b) merchandise: Components for glass container machinery.
Factory: Windsor, CT.
Statement signed: February 4, 1981.
Basis of claim: Used in.
Rate forwarded to Regional Commissioner of Customs: Boston, March 12, 1981.

(K) Company: Leesona Corp.
Section 1313(a) articles: Textile winding machines.
Section 1313(a) merchandise: Wear resistant traverses.
Section 1313(b) articles: Textile winding machines and subunits or functional assemblies thereof.
Section 1313(b) merchandise: Castings, blanks, detail parts, assemblies, and subunits.
Factories: Warwick, RI; Fort Mill, SC.
Statement signed: February 19, 1981.
Basis of claim: Appearing in.
Rate issued by Regional Commissioner of Customs in accordance with section 22.4(o)(2): Boston, February 26, 1981.
Revokes: T.D. 79–84–N.

(L) Company: Liggett Group Inc.
Section 1313(a) articles: Cigarettes; blended tobaccos; cut and blended tobaccos.
Section 1313(a) merchandise: Unstemmed cigarette leaf tobacco; Oriental or Turkish type tobacco.
Section 1313(b) articles: Cigarettes; blended tobacco; blended and cut tobaccos.
Section 1313(b) merchandise: Flue cured scrap tobacco; burley scrap tobacco.
Factory: Durham, NC.
Statement signed: April 28, 1981.
Basis of claim: Appearing in.
Rate forwarded to Regional Commissioner of Customs: Miami, May 28, 1981.
Revokes: T.D. 80–94–K.

349-004 0 - 81 - 2

(M) Company: Eli Lilly and Co.
Section 1313(a) articles: Dobutamine hydrochloride in intermediate' bulk and all finished product formulations.
Section 1313(a) merchandise: Homoveratrylamine; thionyl chloride.
Section 1313(b) articles: Dobutamine hydrochloride in intermediate, bulk and all finished product formulations.
Section 1313(b) merchandise: Homoveratrylamine; thionyl chloride.
Factories: Lafayette, Clinton and Indianapolis, IN.
Statement signed: October 24, 1980.
Basis of claim: Used in.
Rate forwarded to Regional Commissioner of Customs: Chicago, April 3, 1981.

(N) Company: Eli Lilly and Co.
Section 1313(a) articles: Zinc insulin crystals; zinc insulin crystals beef; zinc insulin chromatographically refined; and various forms of iletin (insulin, Lilly).
Section 1313(a) merchandise: Insulin salt cake beef, zinc insulin crystals pork, zinc insulin crystals beef, and zinc insulin crystals.
Section 1313(b) articles: Zinc insulin crystals; zinc insulin crystals beef; zinc insulin crystals chromatographically refined; and various forms of iletin (insulin, Lilly).
Section 1313(b) merchandise: Insulin salt cake beef; zinc insulin crystals pork; zinc insulin crystals beef and zinc insulin crystals.
Factory: Indianapolis, IN.
Statement signed: January 27, 1981.
Basis of claim: Used in.
Rate forwarded to Regional Commissioner of Customs: Chicago, March 26, 1981.

(O) Company: Eli Lilly and Co.
Section 1313(a) articles: Vancomycin hydrochloride in intermediate, bulk and all finished product formulations.
Section 1313(a) merchandise: Potato dextrin.
Section 1313(b) articles: Vancomycin hydrochloride in intermediate, bulk and all finished product formulations.
Section 1313(b) merchandise: Potato dextrin.
Factories: Indianapolis and Greenfield, IN.
Statement signed: October 9, 1980.
Basis of claim: Used in.
Rate forwarded to Regional Commissioner of Customs: Chicago, June 10, 1981.

(P) Company: Merck & Co., Inc., Merck Chemical Manufacturing Division.
Section 1313(a) articles: Sodium cefoxitin sterile (mefoxin).

Section 1313(a) merchandise: Sodium cefoxitin non-sterile for recovery.
Section 1313(b) articles: Sodium cefoxitin sterile (mefoxin).
Section 1313(b) merchandise: Cefoxitin acid hydrate pure.
Factories: Elkton, VA; Albany, GA.
Statement signed: December 15, 1980.
Basis of claim: Used in.
Rate forwarded to Regional Commissioner of Customs: New York, February 26, 1981.

(Q) Company: Merck & Co., Inc., Merck Chemical Manufacturing Division.
Section 1313(a) articles: Sodium cefoxitin sterile (mefoxin); Cefoxitin acid hydrate pure.
Section 1313(a) merchandise: L. Lysine feed grade.
Section 1313(b) articles: Cefoxitin acid hydrate pure; sodium cefoxitin sterile (mefoxin).
Section 1313(b) merchandise: Aminoacetic acid; 1, 3-diaminopropane; dimethyformamide; ethyl acetate; paratoluene-sulfonyl-chloride; thienyl acetyl chloride (TAC).
Factories: Danville, PA; Elkton, VA; Albany, GA.
Statement signed: December 8, 1980.
Basis of claim: Used in.
Rate forwarded to Regional Commissioner of Customs: New York, February 26, 1981.
Revokes: T.D. 79–84–0.

(R) Company: NCR Corp.
Section 1313(a) articles: Finished semiconductor devices.
Section 1313(a) merchandise: Unfinished semiconductor sub-assemblies.
Section 1313(b) articles: Finished semiconductor devices.
Section 1313(b) merchandise: Unfinished semiconductor assemblies.
Factories: Miamisburg, OH; Colorado Springs and Ft. Collins, CO.
Statement signed: September 8, 1980.
Basis of claim: Appearing in.
Rate forwarded to Regional Commissioner of Customs: San Francisco, March 20, 1981.

(S) Company: Peter Paul Cadbury, Inc.
Section 1313(a) articles: Chocolate candy bars; liquid chocolate; chocolate candy bars for rework.
Section 1313(a) merchandise: Cocoa butter; chocolate crumb.
Section 1313(b) articles: Chocolate candy bars; liquid chocolate; chocolate candy bars for rework.
Section 1313(b) merchandise: Cocoa butter: chocolate crumb.
Factory: Hazleton, PA.

Statement signed: December 3, 1979.
Basis of claim: Used in.
Rate forwarded to Regional Commissioner of Customs: New York, March 3, 1981.

(T) Company: Plymouth Tube Co.
Section 1313(a) articles: Carbon steel boiler and condensor seamless tubes and pipe; carbon steel mechanical tubes-seamless, electric resistance welded or buttweld; low alloy steel boiler and condensor seamless tubes and pipe.
Section 1313(a) merchandise: Carbon steel, hot rolled, round tube hollows-seamless, electric resistance welded or buttweld.
Section 1313(b) articles: Carbon steel boiler and condensor seamless tubes and pipe; carbon steel mechanical tubes-seamless, electric resistance welded or buttweld; low alloy steel boiler and condensor seamless tubes and pipe.
Section 1313(b) merchandise: Carbon steel, hot rolled, round tube hollows-seamless, electric resistance welded or butweld.
Factory: Winamac, IN.
Statement signed: February 18, 1981.
Basis of claim: Used in, less valuable waste.
Rate forwarded to Regional Commissioner of Customs: Baltimore, Houston and Chicago, March 3, 1981.
Revokes: Unpublished Headquarters authorization letter of September 25, 1980.

(U) Company: Steiger Tractor, Inc.
Section 1313(a) articles: Tractors.
Section 1313(a) merchandise: Engines and radios.
Section 1313(b) articles: Tractors and manufactured parts.
Section 1313(b) merchandise: Hot rolled steel sheet, strip, blanks, bars, and plate; tempered and toughened glass, clear and tinted; and various parts, assemblies, and sub-assemblies.
Factory: Fargo, ND.
Statement signed: January 21, 1981.
Basis of claim: Used in under section 1313(a); Appearing in under section 1313(b).
Rate forwarded to Regional Commissioners of Customs: New York, March 20, 1981.

(V) Company: Sunstrand Corp., Sunstrand Aviation Operations Division.
Section 1313(a) articles: Aircraft electrical, hydraulic, and mechanical systems and components.

Section 1313(a) merchandise: Various parts for aircraft electrical, hydraulic, and mechanical systems and components, finished and unfinished.
Section 1313(b) articles: Aircraft electrical, hydraulic, and mechanical systems and components.
Section 1313(b) merchandise: Various parts for aircraft electrical, hydraulic, and mechanical systems and components, finished and unfinished.
Factories: Rockford, IL; Denver, CO; Fullerton, CA.
Statement signed: January 23, 1981.
Basis of claim: Used in.
Rate forwarded to Regional Commissioner of Customs: Chicago, March 11, 1981.

(W) Company: Technapac, Inc.
Section 1313(a) articles: Bottle-filling machines and manufactured parts.
Section 1313(a) merchandise: Various parts as listed in manufacturer's statement.
Section 1313(b) articles: Bottle-filling machines and manufactured parts.
Section 1313(b) merchandise: Various parts as listed in manufacturer's statement.
Factory: Clearwater, FL.
Statement signed: February 6, 1981.
Basis of claim: Used in.
Rate forwarded to Regional Commissioner of Customs: New York, April 16, 1981.

(X) Company: Teleco amunications Technology Inc.
Section 1313(a) articles: Various transmission test sets.
Section 1313(a) merchandise: Capacitors, potentiometers, diodes, integrated circuits and other electronic components.
Section 1313(b) articles: Various transmission test sets.
Section 1313(b) merchandise: Capacitors, potentiometers, diodes, integrated circuits and other electronic components.
Factory: Sunnyvale, CA.
Statement signed: September 29, 1980.
Basis of claim: Appearing in.
Rate forwarded to Regional Commissioner of Customs: San Francisco, April 8, 1981.

(Y) Company: Tulon, Inc.
Section 1313(a) articles: Solid carbide drill bits.
Section 1313(a) merchandise: Solid tungsten carbide blanks.
Section 1313(b) articles: Solid carbide drill bits.

Section 1313(b) merchandise: Solid tungsten carbide blanks.
Factory: Gardena, CA.
Statement signed: December 15, 1980.
Basis of claim: Used in, less valuable waste.
Rate forwarded to Regional Commissioner of Customs: Los Angeles, April 6, 1981.

(Z) Company: United Technologies Corp., Sikorsky Aircraft Div.
Section 1313(a) articles: Helicopters and helicopter parts.
Section 1313(a) merchandise: Main rotor shafts, castings, antenna systems, static inverters, direction finders, attitude indicators, terminal jacks, forgings, gearbox kits, generators, generator controls and transformers.
Section 1313(b) articles: Helicopter and helicopter parts.
Section 1313(b) merchandise: Main rotor shafts and castings.
Factories: Bridgeport and Stratford, CT; West Palm Beach, FL.
Statement signed: January 21, 1981.
Basis of claim: Appearing in.
Rate forwarded to Regional Commissioner of Customs: Boston, February 9, 1981.

(T.D. 81-181)

Drawback Statement for Agents

There follows an approved sample drawback statement which may be used by agents operating under T.D.s 55207(1) and/or 55027(2). Anyone operating as such should submit its statement in duplicate to the regional commissioner where the principal will file its drawback claims. This agent's contract is designed to simplify drawback procedures.

Dated: July 7, 1981.

GEORGE C. STEUART
(For Marilyn G. Morrison, Director,
Carriers, Drawback and Bonds Division).

To: Regional Commissioner of Customs
Address
Attention: Drawback Division

DEAR SIR: We, a (name of jurisdiction) corporation, submit this statement to show that the manufacturing operations we perform under contract with (name of principal) for the production or manufacture of ——, comply with TD's 55207(1) and/or 55027(2), and title 19, United States Code, section 1313(b), and part 22 of the Customs Regulations.

NAME AND ADDRESS OF AGENT
LOCATION OF FACTORY
CORPORATE OFFICERS OF AGENT

List only officers who will sign drawback documents and persons with Customs power of attorney.

MANUFACTURING STATEMENT

Detailed description of manufacturing or production process(es) performed.

PROCEDURES ..ND RECORDS MAINTAINED

We will maintain appropriate records to establish:

(1) The identity and specifications of the merchandise we received from the principal;

(2) The date such merchandise was received from the principal;

(3) The date the merchandise received from the principal was used and manufactured by us, and the identity and specifications of the articles produced thereby; and

(4) The date the articles produced by us were returned to the principal.

Our records establishing our compliance with these requirements will be available for audit by Customs during business hours.

AGREEMENTS

We specifically agree that we will:

(1) Comply fully with the terms of this statement when manufacturing and producing articles for account of principal under the principal's drawback contract;

(2) Open our factory and records for examination at all reasonable hours by authorized government officers;

(3) Keep our drawback related records and supporting data for at least three years from the date of payment of any claim predicated, in whole or in part upon this statement;

(4) Keep this statement current by reporting promptly to the regional commissioner who liquidates the claims any changes in the number or location of our offices or factories, the corporate name, or the corporate organization by succession or reincorporation;

(5) Keep a copy of this statement on file for ready reference by employees and require all officials and employees concerned to familiarize themselves with the provisions of this statement, and

(6) Issue instructions to ensure proper compliance with Title 19, United States Code, section 1313(b), part 22 of the Customs Regulations, the principal's drawback statement, and this statement.

DECLARATION OF OFFICIAL

I declare that I have read this statement; that I know the averments and agreements contained therein are true and correct; and that my signature on this ____ day of ____, 19__, makes this endorsement binding on:

(Name of Agent) _____

By: (Name and Title of Officer of Agent)

(T.D. 81-182)

Foreign Currencies—Variances From Quarterly Rate

The following rates of exchange are based upon rates certified to the Secretary of the Treasury by the Federal Reserve Bank of New York, pursuant to Section 522(C), Tariff Act of 1930, as amended (31 USC 372(c)), and reflect variances of 5 per centum or more from the quarterly rate published in Treasury Decision for the following countries. Therefore, as to entries covering merchandise exported on the dates listed, whenever it is necessary for Customs purposes to convert such currency into currency of the United States, conversion shall be at the following rates.

Austria schilling:	
June 29, 1981	$0.059382
June 30, 1981	.059198
Belgium franc:	
June 29, 1981	$0.025510
June 30, 1981	.025478
Brazil cruzeiro:	
June 29–30, 1981	$0.010941
People's Republic of China yuan:	
June 29–30, 1981	$0.571070
Denmark krone:	
June 29, 1981	$0.133690
June 30, 1981	.133094
Finland markka:	
June 29, 1981	$0.224871
June 30, 1981	.224467
France franc:	
June 29, 1981	$0.175177
June 30, 1981	.174886
Ireland pound:	
June 29–30, 1981	$1.5240
Italy lira:	
June 29–30, 1981	$0.000839

Japan yen:	
June 29, 1981	$0.004428
June 30, 1981	.004408
Netherlands guilder:	
June 29, 1981	$0.376011
June 30, 1981	.375305
New Zealand dollar:	
June 29, 1981	$0.8525
June 30, 1981	.8500
Norway krone:	
June 29, 1981	$0.166764
June 30, 1981	.166279
Portugal escudo:	
June 29, 1981	$0.015823
June 30, 1981	.015748
Republic of South Africa rand:	
June 29, 1981	$1.1340
June 30, 1981	1.1277
Spain peseta:	
June 29, 1981	$0.010508
June 30, 1981	.010484
Sweden krone:	
June 29, 1981	$0.196657
June 30, 1981	.196541
Switzerland franc:	
June 29, 1981	$0.491763
June 30, 1981	.487924
United Kingdom pound:	
June 29, 1981	$1.9435
June 30, 1981	1.9300

LIQ-03-01 O: C: E:

Date: June 30, 1981.

KENNETH A. RICH,
Chief,
Customs Information Exchange.

(T.D. 81-183)

The table below lists rates of exchange, in United States dollars for certain foreign currencies, which are based upon rates certified to the Secretary of the Treasury by the Federal Reserve of New York under provisions of section 522(c), Tariff Act of 1930, as amended (31 USC 372(c)), for the information and use of Customs officers and others concerned pursuant to Part 159, Subpart C, Customs Regulations (19 CFR 159, Subpart C).

349-004 0 - 81 - 3

QUARTER BEGINNING: JULY 1, 1981 THROUGH SEPTEMBER 30, 1981

Country	Name of currency	U.S. dollars
Australia	Dollar	1.1468
Austria	Schilling	.058884
Belgium	Franc	.025310
Brazil	Cruzeiro	.010941
Canada	Dollar	.830910
China, P.R	Renminbi Yuan	.571070
Denmark	Krone	.132144
Finland	Markka	.222544
France	Franc	.174368
Germany	Deutsche Mark	.414422
Hong Kong	Dollar	.179986
India	Rupee	.115607
Iran	Rial	.012618
Ireland	Pound	1.5120
Italy	Lira	.000834
Japan	Yen	.004381
Malaysia	Dollar	.429738
Mexico	Peso	.040875
Netherlands	Guilder	.372995
New Zealand	Dollar	.8468
Norway	Krone	.165153
Philippines	Peso	.128263
Portugal	Escudo	.015601
Republic of South Africa	Rand	1.1200
Singapore	Dollar	.467727
Spain	Peseta	.010401
Sri-Lanka	Rupee	.053850
Sweden	Krona	.195465
Switzerland	Franc	.481928
Thailand	Baht (Tical)	.047847
United Kingdom	Pound	1.9025
Venezuela	Bolivar	.232883

(LIQ-03-01 O:C:E)

Date:

KENNETH A. RICH,
Chief,
Customs Information Exchange.

ERRATUM

In CUSTOMS BULLETIN, Volume 15, No. 20, in T.D. 81-121, on page 12, change name of principal from Pacific Midwestern Express Ltd., to P.M.E., Ltd.

Recent Unpublished Customs Service Decisions

The following listing of recent administrative decisions issued by the Office of Regulations and Rulings, U.S. Customs Service, and not otherwise published, is published for the information of Customs Officers and the importing community. Although the decisions are not of sufficient general interest to warrant publication as Treasury Decisions, the listing describes the issues involved and is intended to aid Customs officers and concerned members of the public in identifying matters of interest which recently have been considered by the Office of Regulations and Rulings.

A copy of any decision included in this listing, identified by its date and file number, may be obtained in a form appropriate for public distribution upon written request to the Office of Regulations and Rulings, Attention: Legal Retrieval and Dissemination Branch, Room 2404, U.S. Customs Service, 1301 Constitution Avenue NW., Washington, D.C. 20229. These copies will be made available at a cost to the requester of $0.10 per page. However, the Customs Service will waive this charge if the total number of pages copied is ten or less.

Decisions listed in earlier issues of the CUSTOMS BULLETIN, through February 2, 1981, are available in microfiche format at a cost of $30.90 ($0.15 per sheet of fiche). It is anticipated that additions to the microfiche will be made quarterly and subscriptions are available. Requests for the microfiche now available and for subscriptions should be directed to the Legal Retrieval and Dissemination Branch. Subscribers will automatically receive updates as they are issued and will be billed accordingly.

Dated: July 2, 1981.

B. JAMES FRITZ,
Director,
Regulations Control and Disclosure Law Division.

Date of decision	File no.	Issue
8–18–80	104539	Export Declarations: the possible amendment to section 4.75(c) and footnote 109 of the Customs Regulations, to provide that vessels registered in, as well as destined to, the nations listed in footnote 109 may not be granted clearance until a complete outward foreign manifest and all required export declarations are filed
6– 3–81	104953	Vessels: the procedures for boarding and entering vessels
6– 5–81	105041	Vessels: the use of foreign-flag or foreign-built fish processing vessels within 200 miles of the U.S. including the internal waters of the U.S.
5–29–81	105044	Vessels: authority of the District Director to waive requirement for cruising license
6–10–81	105047	Vessels: vessel repairs
6–10–81	105143	Vessels: whether foreign-flag drilling vessels may operate on the Outer Continental Shelf of the U.S.
6– 3–81	105165	Vessels: vessel repair costs
6– 3–81	105167	Instruments of international traffic: whether insulated containers used to transport frozen precarbonated emulsions may be designated as instruments of international traffic
5–29–81	105168	Vessels: a possible violation of the coastwise laws involving the use of a foreign-built vessel
6– 5–81	105175	Vessels: state numbered vessel operated as oceanographic research vessel not subject to 19 U.S.C. 1466 (vessel repairs statute)
5–29–81	105177	Vessels: whether the use of a foreign-built, U.S. licensed yacht to teach sailing for a fee in U.S. waters is a violation of the coastwise trade laws
6– 8–81	105178	Vessels: the applicability of the coastwise trade laws to the use of a foreign-flag barge in the transportation of a drilling rig within U.S. territorial waters
6–10–81	105190	Instruments of international traffic: whether certain cores used to transport building materials are entitled to instruments of international traffic status
6– 8–81	105191	Vessels: the exchange by tugboat of two U.S.-flag barges on the high seas
5–22–81	542310	Classification: the applicability of transaction value to sales between related parties where the goods may or may not be destined for export to the U.S.
5–28–81	542347	Classification: value of assists purchased by the importers. TAA 8 reconsidered and affirmed
5–20–81	542353	Classification: the proper valuation of mushrooms imported from South Korea
5–22–81	800380	Classification: moldable paper (252.90, 256.30)

Date of decision	File no.	Issue
4-14-81	800417	Classification: batch house, vibrating tubes, weighing machines, conveyors, mixing machine, automatic press machine, automatic blowing machine, take-out machine, lehr, cracking off grinding and polishing machine, automatic engraving machine, and fire polishing machine (640.35, 664.10, 662.30, 662.26, 678.20, 678.30, 661.30, 674.42, 661.68)
4-21-81	800419	Claissfication: steel pipe with aluminum and plastic overlay (657.25)
4-21-81	800495	Classification: diesel engines and automobile parts (660.42, 683.60, 692.32)
5-21-81	800498	Classification: detonating cord sleeves (755.50)
5-15-81	800502	Classification: battery operated toy airplane (737.95)
5-11-81	800526	Classification: hi silicon iron castings (688.45)
5-15-81	800570	Classification: wooden household articles (206.98)
5-11-81	800571	Classification: rubber splash guards (774.55, 646.60, 646.70)
5-11-81	800573	Classification: microprocessor controlled programmed biological freezer (661.35)
5-20-81	800588	Classification: folding chair of wood and rattan (727.25, 727.11)
5-13-81	800601	Classification: trailers (692.60)
5-20-81	800606	Classification: two-piece toddler's shirt and shorts set (382.04)
6- 1-81	800616	Classification: tube feeding formula (183.05)
5-15-81	800627	Classification: dart gun set (734.15)
5-19-81	800639	Classification: cotton fabric (322.32)
5-19-81	800649	Classification: aluminum labels (790.55)
5-21-81	800651	Classification: aluminum metallized polyester strips (774.55)
5-22-81	800653	Classification: various bridal supplies made from parafin type wax pearls (748.21, 750.22, 741.50, 657.75, 740.50)
5-26-81	800654	Classification: man's woven cotton garment (380.09, 380.12)
5-15-81	800655	Classification: various furniture items (727.35, 727.29, 206.67)
5-20-81	800663	Classification: hospital bed (727.04)
5-22-81	800668	Classification: fabric pendants and broaches with light emitting diodes (740.38)
5-20-81	800682	Classification: inflatable apple with legs (737.95)
5-26-81	800687	Classification: needlepoint kit (310.91, 386.50, 651.05)
5-26-81	800691	Classification: remote control vehicles and separate hand-held transmitters (737.15, 685.60)
5-26-81	800693	Classification: toy windup wheel (737.80)
5-22-81	800702	Classification: problem solving workbook (270.25)
5-18-81	064901	Classification: wind surfboard (696.05)

Date of decision	File no.	Issue
6- 5-81	065025	American selling price basis of valuation to character sneakers
5- 7-81	065178	Classification: strawberry flavorbase (146.75)
2-17-81	065193	Reconsideration of IA 18-79 on disposable hospital apparel
5- 7-81	065479	Classification: thermo-formable laminate sheets
5-28-81	065503	Classification: women's lace wearing apparel (British camisole) (378.35)
5-13-81	065544	Classification: fitted shoe upper (791.28, 791.00, 774.50)
6- 5-81	065635	Classification: moon boot shells (700.60)
5-29-81	065651	Classification: moon boot shells (700.60)
5-21-81	065666	Classification: polyurethane seals (681.39, 773.25)
4-17-81	065727	Classification: mini-floppy diskettes (724.40, 724.45)
5-28-81	065852	Classification: children's cosmetics (461.40, 461.30, 706.62, 706.61, 688.45, 774.55, 737.22, 737.95)
6- 2-81	065906	Classification: automobile muffler clamp (692.32)
5-29-81	065920	Classification: minced fish balls (113.20)
5-13-81	066474	Classification: "MINE-245" vehicle (692.32)
6- 2-81	066778	Classification: yarn rabbit characters (737.40)
5-22-81	066781	Classification: cocktail napkins (366.79)
5- 7-81	066786	Classification: residue from a copper refining operation (603.60)
5-29-81	066800	Classification: beverage concentrate (183.05)
5-21-81	068056	Classification: candleholders (653.39)
6- 5-81	068193	Classification: moon boot shells (700.60)
3- 3-81	068204	Classification: axle housing (678.50)
6-12-81	068415	Classification: eelskin wallets and eyeglass cases (706.05)
5-14-81	068436	Classification: off-road dump trucks and parts (692.02, 945.69, 692.32, 772.51, 660.42)
6- 5-81	068487	Classification: moon boot shells (700.60)
5-28-81	068502	Classification: openwork fabric with inwrought design, made on a Barfus knitting machine (382.04)
6- 5-81	068545	American selling price of chest waders
5-29-81	068592	Classification: fish designated as scientific specimens (184.55)

349-004 0 - 82 - 4

Customs Service

General Notice

(19 CFR Part 101)

General Provisions

Proposed Change in the Field Organization of the Customs Service

AGENCY: U.S. Customs Service, Department of the Treasury.

ACTION: Proposed rule.

SUMMARY: This notice proposes to amend the Customs Regulations to change the field organization of the Customs Service by:

Extending the limits of the Saginaw-Bay City-Flint, Michigan, port of entry (Region IX), to include the Tri-City Airport;

Extending the limits of the San Francisco-Oakland, California, port of entry (RegionVIII), to include Travis Air Force Base;

Extending the limits of the Durham, North Carolina, port of entry (Region IV), to include the Raleigh-Durham Airport complex; and,

Clarifying the limits of the Columbus, Ohio, port of entry (Region IX).

The proposed changes are part of Customs continuing program to obtain more efficient use of its personnel, facilities, and resources, and to provide better service to carriers, importers, and the public.

DATES: Comments must be received on or before: (60 days from the date of publication in the Federal Register).

ADDRESS: Comments (preferably in triplicate) may be addressed to the Commissioner of Customs, Attention: Regulations and Information Division, U.S. Customs Service, 1301 Constitution Avenue, NW., Room 2426, Washington, D.C. 20229.

FOR FURTHER INFORMATION CONTACT: Richard C. Coleman, Office of Inspection, U.S. Customs Service, 1301 Constitution Avenue NW., Washington, D.C. 20229 (202–566–8157).

SUPPLEMENTARY INFORMATION:

BACKGROUND

As part of a continuing program to obtain more efficient use of its personnel, facilities, and resources, and to provide better service to carriers, importers, and the public, the Customs Service proposes to:

Extend the limits of the Saginaw-Bay City-Flint, Michigan, port of entry (Region IX), to iuclude the Tri-City Airport;

Extend the limits of the San Francisco-Oakland, California, port of entry (Region VIII), to include Travis Air Force Base;

Extend the limits of the Durham, North Carolina, port of entry (Region IV), to include the Raleigh-Durham Airport complex; and,

Clarify the limits of the Columbus, Ohio, port of entry (Region IX).

(a) *Saginaw-Bay City-Flint, Michigan.* The limits of the consolidated Customs port of entry of Saginaw-Bay City-Flint, Michigan, were extended by T.D. 79–74 (44 FR 12029). However, the extension did not encompass the Tri-City Airport. Because virtually all of the international aircraft arriving in the area, particularly general aviation from Canada, now is processed at the recently improved Tri-City Airport, Customs has determined that the port limits should be extended to include that facility.

As extended, the geographical boundaries of the consolidated port of entry of Saginaw-Bay City-Flint, Michigan, would include:

All the territory within the corporate limits of Saginaw and Bay City; from Bay City due west along the right-of-way of U.S. Highway No. 10, to the intersection of Garfield Road and U.S. Highway No. 10, south on Garfield Road to and including the Tri-City Airport, bounded on the west by Garfield Road, on the east by Hackett Road, on the south by Freeland Road and on the north by Sarle Road; the territory embracing the Townships of Zilwaukee, Carrolton and Buena Vista, in Saginaw County; the Townships of Portsmouth and Frankenlust, in Bay County; the right-of-way of Interstate Highway 75, south to and including Flint Township; the city of Flint; and that portion of Genesee Township bounded by Saginaw Street on the west, Stanley Road on the north, Lewis Road on the east, and the city of Flint on the south; all in the State of Michigan.

(b) *San Francisco-Oakland, California.* T.D. 79–74 also clarified, but did not change the geographical description of the port limits of the Customs port of entry of San Francisco-Oakland, California. The

Regional Commissioner of Customs, San Francisco (Region VIII), now has requested that the port limits be extended to include Travis Air Force Base.

Travis Air Force Base, located near San Francisco, California, is outside both the city and Customs port of entry limits. However, Customs provides manpower for service at this location on a regular basis. To ensure continued service for this workload, now subject to the uncertainty and additional costs associated without-of-port service, Customs proposes to extend the San Francisco-Oakland port limits to include Travis Air Force Base.

As extended, the geographical boundaries of the San Francisco-Oakland, California, port of entry would include:

> All the territory within the corporate limits of San Francisco and Oakland; all points on the San Francisco Bay, San Pablo Bay, Carquinez Strait, and Suisun Bay; all points on the San Joaquin River in Contra Costa and San Joaquin Counties, to and including Stockton; north along U.S. Interstate 80 to Airbase Parkway, east along Airbase Parkway to and including the territory comprising the Travis Air Force Base; all points on the Sacramento River in Solano, Yolo, and Sacramento Counties, from the junction of the Sacramento River within the San Joaquin River in Sacramento County, to and including Sacramento, California; and all points on the Sacramento River Deep Water Ship Channel in Solano, Yolo, and Sacramento Counties, from and including the junction of Cache Slough with the Sacramento River, to and including Sacramento; all in the State of California.

(c) *Durham, North Carolina.* Operations at the Durham, North Carolina, Customs port of entry reflect an increase in the volume of aircraft and over-the-road shipments, accompanied by a decrease in the importation of tobacco for warehousing. Planning now is underway to expand the Raleigh-Durham Airport complex to accommodate the increased traffic and larger aircraft. The Raleigh-Durham Airport, which is outside the current port limits, is expected to encompass the major portion of Durham's workload.

Also, Customs has been advised that it must vacate its present Durham office. Because adequate office space is available at the Raleigh-Durham Airport, Customs believes that moving its offices to the airport and extending the present port limits to include the airport would locate manpower closer to major work locations and improve Customs service in the area.

As extended, the geographical boundaries of the Durham, North Carolina, port of entry would include:

All the territory within the corporate limits of Durham; and from the southeast intersection of the corporate limits of Durham and U.S. Highway No. 70, southeast along U.S. Highway No. 70 to State Road 1002 (also named Airport Road), southwest along State Road 1002 to and including the territory comprising the Raleigh-Durham Airport; and beginning at the intersection of the southeastern corporate limits of Durham and Ellis Road, southerly along the west side of Ellis Road a distance of 1.1 miles to Cook Road, then westerly along the north side of Cook Road a distance of .6 mile to Alston Avenue, then northwesterly along the east side of Alston Avenue a distance of 1.2 miles to the corporate limits of Durham; all in the State of North Carolina.

(d) *Columbus, Ohio.* The port limits of the Columbus, Ohio, Customs port of entry coincide with the city's corporate limits. However, because the city has annexed surrounding areas on a piecemeal basis over the years, there now are areas within the city which are not included in the Customs port of entry. As a result, it often is difficult to determine whether service at various locations is being provided inside or outside port limits.

In order to clarify the port boundaries to improve service to the public, the description of the Columbus port limits would be amended to read:

All the territory within the corporate limits of Columbus, Ohio; all of the territory completely surrounded by the city of Columbus; and, all of the territory enclosed by Interstate Highway 270 (outer belt), which completely surrounds the city.

AMENDMENTS TO THE REGULATIONS

If the proposed changes are adopted, the list of Customs regions, districts, and ports of entry in section 101.3, Customs Regulations (19 CFR 101.3), would be amended accordingly.

COMMENTS

Before adopting this proposal, consideration will be given to any written comments timely submitted to the Commissioner of Customs. Comments submitted will be available for public inspection in accordance with section 103.8(b), Customs Regulations (19 CFR 103.8(b)), on normal business days between the hours of 9:00 a.m. to 4:30 p.m. at the Regulations and Information Division, Room 2426, Headquarters, U.S. Customs Service, 1301 Constitution Avenue NW., Washington, D.C. 20229.

AUTHORITY

These changes are proposed under the authority vested in the President by section 1 of the Act of August 1, 1914, 38 Stat. 623, as

amended (19 U.S.C. 2), and delegated to the Secretary of the Treasury by Executive Order No. 10289, September 17, 1951 (3 CFR 1949–1953 Comp., Ch. II), and pursuant to authority provided by Treasury Department Order No. 101–5 (46 FR 9336).

INAPPLICABILITY OF REGULATORY FLEXIBILITY ACT

This document is not subject to the provisions of sections 603 and 604 of Title 5, United States Code (as added by section 3 of Pub. L. 96–354, the "Regulatory Flexibility Act"), because it is not likely to have a significant economic impact upon a substantial number of small entities.

Customs routinely establishes, expands, and eliminates Customs ports of entry throughout the United States to accommodate the volume of Customs-related activity in various parts of the country. Although this change may have a limited effect upon some small entities, it is not expected to be significant because extending the port limits at Customs ports of entry in other areas has not had a significant economic impact upon a substantial number of small entities to the extent contemplated by the Regulatory Flexibility Act.

DRAFTING INFORMATION

The principal author of this document was Lawrence P. Dunham, Regulations and Information Division, Office of Regulations and Rulings, U.S. Customs Service. However, personnel from other Customs offices participated in its development.

Dated: June 17, 1981.

JOHN P. SIMPSON,
Acting Assistant Secretary of the Treasury.

United States Court of International Trade

One Federal Plaza
New York, N.Y. 10007

Chief Judge

Edward D. Re

Judges

Paul P. Rao
Morgan Ford
Scovel Richardson
Frederick Landis
James L. Watson
Herbert N. Maletz
Bernard Newman
Nils A. Boe

Senior Judge

Samuel M. Rosenstein

Clerk

Joseph E. Lombardi

Decisions of the United States Court of International Trade

Abstracts

Abstracted Protest Decisions

DEPARTMENT OF THE TREASURY, *June 29, 1981.*

The following abstracts of decisions of the U.S. Court of International Trade at New York are published for the information and guidance of officers of the Customs and others concerned. Although the decisions are not of sufficient general interest to print in full, the summary herein given will be of assistance to Customs officials in easily locating cases and tracing important facts.

WILLIAM T. ARCHEY,
Acting Commissioner of Customs.

DECISION NUMBER	JUDGE & DATE OF DECISION	PLAINTIFF	COURT NO.	ASSESSED	HELD	BASIS	PORT OF ENTRY AND MERCHANDISE
				Par. or Item No. and Rate	Par. or Item No. and Rate		
P81/90	Rao, J. June 22, 1981	Dumont Oscilloscope Laboratories	78-2-00366	Item 712.49 10% (printed circuit boards material in 8 of 9 entries; attenuators in entry K298213) Item 687.60 6% (transistors in entry K298213) Item 685.90 8.5% (printed circuit boards material in entry K259079 Without allowance under item 807.00	Item 712.49/807.00 10% only applied to cost of materials of foreign origin plus cost of assembly as described in decision and judgment; remaining portion of goods allowed duty-free reentry under item 807.00 (printed circuit boards materials in entries K286985, K286992, K298213, K286993, K286991, K231433, K259078; attenuators in entry K298213)	Agreed statement of facts	New York American goods returned; printed circuit boards and material

best copy available

| | | |

DECISION NUMBER	JUDGE & DATE OF DECISION	PLAINTIFF	COURT NO.	ASSESSED	HELD	BASIS	PORT OF ENTRY AND MERCHANDISE
				Par. or Item No. and Rate	Par. or Item No. and Rate		
P81/91	Landis, J. June 22, 1981	The Alligator Co., Inc.	77-10-04119, etc.	Item 380.04 42.5%	Item 380.34 25¢ per lb. +27.5%	Agreed statement of facts	New York Men's unornamented wearing apparel of man-made fibers, not knit
P81/92	Landis, J. June 22, 1981	C. J. Tower & Sons of Buffalo, Inc.	77-11-04654	Item 307.64 30¢ per lb. +15%	Item 307.60 Free of duty	Judgment on the pleadings	Buffalo White wool yarn
P81/93	Newman, J. June 22, 1981	A. N. Deringer, Inc., a/c Uniroyal, Inc.	78-1-00178	Item 657.20 9.5%	Item 772.65 4%	Uniroyal, Inc., c/o A. N. Deringer, Inc. v. U.S. (Abs. P80/59)	Champlain-Rouses Point (Ogdensburg) Rubber hose, pipe or tubing in various lengths with attached fittings
P81/94	Newman, J. June 22, 1981	A. N. Deringer, Inc., a/c Uniroyal Inc.	78-1-00183	Item 657.20 9.5%	Item 772.65 4%	Uniroyal, Inc., c/o A. N. Deringer, Inc. v. U.S. (Abs. P80/59)	Champlain-Rouses Point (Ogdensburg) Rubber hose, pipe or tubing in various lengths with attached fittings
P81/95	Maletz, J. June 23, 1981	Jimlar Corporation	68/35147, etc.	Item 700.60 20%	Item 700.70 15% or 12%	International Seaway Trading Corp. v. U.S. (C.D. 4773)	New York Footwear
P81/96	Maletz, J. June 23, 1981	Jimlar Corporation	69/29046, etc.	Item 700.60 20%	Item 700.70 15%, 13% or 12%	International Seaway Trading Corp. v. U.S. (C.D. 4773)	New York Footwear
P81/97	Maletz, J. June 23, 1981	Jimlar Corporation	69/37908, etc.	Item 700.60 20%	Item 700.70 15%, 13% or 12%	International Seaway Trading Corp. v. U.S. (C.D. 4773)	New York Footwear

P81/98	Maletz, J. June 23, 1981	Jimlar Corporation	70/11113, etc.	Item 700.60 20%	Item 700.70 15%, 13%, 12% or 10%	International Seaway Trading Corp. v. U.S. (C.D. 4773)	New York Footwear
P81/99	Landis, J. June 24, 1981	Corham Artifical Flower Co.	78-6-01124	Item 748.32 11%	Item 748.30 Free of duty	Agreed statement of facts	Los Angeles Dried grasses
P81/100	Landis, J. June 24, 1981	Norsteel Corporation (Normandy Rods, Inc.)	79-5-00808	Item 608.75 0.375¢ per lb. (changed from item 608.71 at 0.25¢ per lb. based on laboratory analysis which indicated merchandise was annealed)	Item 608.71 0.25¢ per lb.	Agreed statement of facts	Toledo (Cleveland) Steel wire rods (6,663,293 lbs.) not subjected to annealin or any other heat treatment
P81/101	Maletz, J. June 24, 1981	Jimlar Corporation et al.	70/39176, etc.	Item 700.60 20%	Item 700.70 15% or 12%	International Seaway Trading Corp. v. U.S. (C.D. 4773)	New York Footwear
P81/102	Maletz, J. June 24, 1981	Jimlar Corporation	70/51300, etc.	Item 700.60 20%	Item 700.70 12% or 10%	International Seaway Trading Corp. v. U.S. (C.D. 4773)	New York Footwear
P81/103	Maletz, J. June 24, 1981	Jimlar Corporation	72-11-02263, etc.	Item 700.60 20%	Item 700.70 15%, 13%, 12% or 10%	International Seaway Trading Corp. v. U.S. (C.D. 4773)	New York Footwear
P81/104	Maletz, J. June 24, 1981	Jimlar Corporation	75-12-03294	Item 700.60 20%	Item 700.70 15% or 12%	International Seaway Trading Corp. v. U.S. (C.D. 4773)	New York Footwear

DECISION NUMBER	JUDGE & DATE OF DECISION	PLAINTIFF	COURT NO.	ASSESSED	HELD	BASIS	PORT O ENTRY AND MERCHANDISE
				Par. or Item No. and Rate	Par. or Item No. and Rate		
P81/105	Newman, J. June 25, 1981	Uniroyal, Inc.	80-5-00752	Item 657.25 9.5%	Item 772.65 4%	Uniroyal, Inc., c/o A. N. Deringer, Inc. v. U.S. (Abs. P80/59)	Champlain-Rouses Point (Ogdensburg) Rubber hose, pipe or tubing in various lengths with attached fittings
P81/106	Newman, J. June 25, 1981	Uniroyal, Inc.	80-5-00753	Item 657.25 9.5%	Item 772.65 4%	Uniroyal, Inc., c/o A. N. Deringer, Inc. v. U.S. (Abs. P80/59)	Champlain-Rouses Point (Ogdensburg) Rubber hose, pipe or tubing in various lengths with attached fittings

Decision of the United States Court of International Trade

Abstracts

Abstracted Reappraisement Decisions

DECISION NUMBER	JUDGE & DATE OF DECISION	PLAINTIFF	COURT NO.	BASIS OF VALUATION	HELD VALUE	BASIS	PORT OF ENTRY AND MERCHANDISE
R81/234	Re, C.J. June 22, 1981	Marubeni America Corp.	74-7-01781-8	Export value	Unit values found by appraising customs official, less ocean freight and marine insurance, and without additions for currency fluctuation	C.B.S. Imports Corp. v. U.S. (C.D. 4739)	Savannah; New York; New Orleans Various articles
R81/235	Re, C.J. June 22, 1981	Marubeni America Corp	75-5-01149	Export value	Appraised value, less amount added for currency fluctuation	C.B.S. Imports Corp. v.U.S. (C.D. 4739)	Chicago Stainless steel stripes

DECISION NUMBER	JUDGE & DATE OF DECISION	PLAINTIFF	COURT NO.	BASIS OF VALUATION	HELD VALUE	BASIS	PORT OF ENTRY AND MERCHANDISE
R81/236	Re, C.J. June 22, 1981	Marubeni America Corp.	75-10-02736	Export value	Unit values found by appraising customs official, less ocean freight and marine insurance, and without additions for currency fluctuation	C.B.S. Imports Corp. v. U.S. (C.D. 4739)	New York Various articles
R81/237	Re, C.J. June 22, 1981	Starlight Trading, Inc.	76-1-00076	Export value	Appraised values shown on entry papers less additions included to reflect currency revaluation	C.B.S. Imports Corp. v. U.S. (C.D. 4739)	New York Miscellaneous articles
R81/238	Landis, J. June 22, 1981	Bar-Zel Expediters, Inc.	79-7-01138	Cost of production	At column 6 values, plus packing, using correct commercial currency exchange rates of .024005 and .024237	Judgment on the pleadings	New York Tires and tubes from Hungary
R81/239	Landis, J. June 22, 1981	Bar-Zel Expediters, Inc.	79-7-01139	Cost of production	At column 6 values, plus packing, using correct commercial currency exchange rate of .024237	Judgment on the pleadings	New York Tires and tubes from Hungary
R81/240	Landis, J. June 22, 1981	Duddy's Inc.	79-7-01140	Cost of production	At column 6 values, plus packing, using correct commercial currency exchange rate of .024296	Judgment on the pleadings	New York Tires and tubes from Hungary

R81/241	Landis, J, June 22, 1981	Duddy's, Inc.	79-7-01142	Foreign value	At column 6 values, plus packing, using correct commercial currency exchange rate of .024237	Judgment on the pleadings	Miami Tires and tubes from Hungary
R81/242	Landis, J. June 22, 1981	Wayne M. Withrow & Co.	78-12-02058	Foreign value	At column 6 values, plus packing, using correct commercial currency exchange rate of .024237	Judgment on the pleadings	Los Angeles Tires and tubes from Hungary
R81/243	Maletz, J. June 24, 1981	Mitsubishi International	R69/4903, etc.	Export value	Invoiced f.o.b. prices specified for each article	International Seaway Trading Corp. v. U.S. (C.D. 4773) wherein merchandise was held classifiable under item 700.70, TSUS	Mobile Footwear
R81/244	Maletz, J. June 24, 1981	Mitsubishi International Corp.	R69/7775, etc.	Export value	Invoiced f.o.b. prices specified for each article	International Seaway Trading Corp. v. U.S. (C.D. 4773) wherein merchandise was held classifiable under item 700.70, TSUS	New Orleans Footwear
R81/245	Maletz, J. June 24, 1981	Mitsubishi International	R70/6865, etc.	Export value	Invoiced f.o.b. prices specified for each article	International Seaway Trading Corp. v. U.S. (C.D. 4773) wherein merchandise was held classifiable under item 700.70, TSUS	Los Angeles Footwear

Judgment of the U.S. Court of International Trade in Appealed Case

JUNE 25, 1981

Appeal 80–37.—INTERNATIONAL SPRING MFG. CO. *v.* UNITED STATES.—METAL LEAF SPRINGS—SPRINGS AND LEAVES FOR SPRINGS, OF BASE METAL—OTHER—SUITABLE FOR MOTOR VEHICLE SUSPENSION—TSUS.—C.D. 4862 affirmed February 19, 1981 (C.A.D. 1257).

International Trade Commission Notices

Investigations by the U.S. International Trade Commission

DEPARTMENT OF THE TREASURY, JULY 9, 1981

The appended notices relating to investigations by the U.S. International Trade Commission are published for the information of Customs officers and others concerned.

WILLIAM T. ARCHEY,
Acting Commissioner of Customs.

In the Matter of CERTAIN FOOD SLICERS AND COMPONENTS THEREOF	Investigation No. 337-TA-76

Notice of Termination of Investigation

AGENCY: U.S. International Trade Commission.

ACTION: Termination of investigation.

SUPPLEMENTARY INFORMATION: Upon receipt of a complaint filed on November 5, 1979, the Commission on December 21, 1979, published a notice of institution of an investigation (44 F.R. 75738), pursuant to section 337 of the Tariff Act of 1930, 19 U.S.C. 1337, of alleged unfair methods of competition and unfair acts in the unauthorized importation and sale of certain food slicers and components thereof.

On June 15, 1981 the Commission unanimously determined that there was no violation of section 337 in investigation No. 337-TA-76 in the importation or sale of certain food slicers and components thereof.

Copies of the Commission's determination and order and all other public documents filed in connection with this investigation are available for inspection during official business hours (8:45 a.m to 5:15 p.m.) in the Office of the Secretary, U.S. International Trade Commission, 701 E Street NW., Washington, D.C. 20436, telephone 202-523-0161.

FOR FURTHER INFORMATION CONTACT: Warren H. Maruyama, Esq., Office of the General Counsel, U.S. International Trade Commission, telephone 202–523–0375.

By order of the Commission.

Issued: June 22, 1981.

KENNETH R. MASON,
Secretary.

Notice of Termination of Investigation No. 731–TA–43 (Preliminary)

FRESH CUT ROSES FROM COLOMBIA

AGENCY: United States International Trade Commission.

ACTION: Termination of preliminary countervailing duty investigation and cancellation of public conference.

EFFECTIVE DATE: June 24, 1981.

FOR FURTHER INFORMATION CONTACT: Mr. John MacHatton, Supervisory Investigator (202–523–0439), Office of Investigations.

SUPPLEMENTARY INFORMATION: On June 8, 1981, following receipt of a petition filed by counsel for Roses Incorporated, the Commission instituted preliminary antidumping investigation No. 731–TA–43 (Preliminary), Fresh cut roses from Colombia. The purpose of the investigation was to determine whether there is a reasonable indication that an industry in the United States is materially injured, or is threatened with material injury, or the establishment of an industry is materially retarded, by reason of imports of fresh cut roses from Colombia, provided for in item 192.18 of the Tariff Schedules of the United States, allegedly sold at less than fair value.

On June 25, 1981, the Commission received advice from the Department of Commerce that the petition in the subject investigation had been dismissed because it does not contain sufficient information to support the allegation of sales at less than fair value. Pursuant to its authority under section 207.13 of the Commission's Rules of Practice and Procedure, the Commission's investigation concerning this product from Colombia is hereby terminated, and the conference scheduled for June 30, 1981 is hereby canceled.

Issued June 25, 1981.

KENNETH R. MASON, *Secretary.*

In the Matter of	
CERTAIN COIN-OPERATED AUDIOVISUAL GAMES AND COMPONENTS THEREOF (VIZ RALLY-X AND PAC MAN)	Investigation No. 337-TA-105

Notice of Investigation

AGENCY: U.S. International Trade Commission.

ACTION: Institution of investigation pursuant to 19 U.S.C. 1337.

SUMMARY: Notice is hereby given that a complaint was filed with the U.S. International Trade Commission on April 17, 1981, supplemented by submissions filed on April 30, 1981, May 7, 1981, June 15, 1981, and June 17, 1981, under section 337 of the Tariff Act of 1930 (19 U.S.C. 1337), on behalf of Midway Mfg., Co., 10750 W. Grand Avenue, Franklin Park, Illinois 60131. The amended complaint (hereinafter the complaint) alleges unfair methods of competition and unfair acts in the importation of certain coin-operated audiovisual games and components thereof into the United States, or in their sale, by reason of the alleged (1) infringement of complainant's common law trademarks PAC MAN and RALLY-X, and (2) infringement of complainant's copyrights covering the audiovisual works for the PAC MAN and RALLY-X games. The complaint further alleges that the effect or tendency of the unfair methods of competition and unfair acts is to destroy or substantially injure an industry, efficiently and economically operated, in the United States.

The complainant requests that, during the pendency of the investigation, the Commission issue both a temporary exclusion order, prohibiting importation of said articles into the United States except under bond, and a temporary cease and desist order; and, after a full investigation, issue both a permanent exclusion order and a permanent cease and desist order.

AUTHORITY: The authority for institution of this investigation is contained in section 337 of the Tariff Act of 1930 and in section 210.12 of the Commission's Rules of Practice and Procedure.

SCOPE OF THE INVESTIGATION: Having considered the complaint, the U.S. International Trade Commission, on June 23, 1981, ordered that—

(1) Pursuant to subsection (b) of section 337 of the Tariff Act of 1930, an investigation be instituted to determine whether there is reason to believe there is a violation and whether there is a violation of subsection (a) of section 337 in the unlawful importation of certain coin-operated audiovisual games and components thereof into the

United States, or in their sale, by reason of the alleged (1) infringement of complainant's common law trademarks PAC MAN and RALLY-X, and (2) infringement of complainant's copyrights covering the audiovisual works for the PAC MAN and RALLY-X games, the effect or tendency of which is to destory or substantially injure an industry, efficiently and economically operated, in the United States;

(2) For the purpose of this investigation so instituted, the following are hereby named as parties upon which this notice of investigation shall be served:

(a) The complainant is—
Midway Mfg. Co.
10750 W. Grand Avenue
Franklin Park, Ill. 60131

(b) The respondents are the following persons, alleged to be in violation of section 337, and are parties upon which the complaint is to be served:

Kyugo Company, Ltd.
2–6–14 Higashiyama
Maguro-Ku
Tokyo, Japan

Friend Spring Industrial Co., Ltd.
No. 323, Son San Road
Taipei, Taiwan

Ohtsu International, Inc.
Tochi Bldg., 50–13
Higashi-Ikebukuro 2-Chome
Toshima-Ku
Tokyo 170, Japan

Carlin Tiger Shokai, Ltd.
Room 505, Mita Keio Busidence Bldg.
2–14–4, Mita, Minato-Ku
Tokyo, Japan

Nippon Semicon, Inc.
Casa Nishi-Shinjuku Bldg.
15–4, 6-Chome Nishi-Shinjuku
Shinjuku-Ku
Tokyo, Japan

Karateco
211, Villa Akasaka, 6-Chome
10–45, Akasaka Minato-Ku
Tokyo 107, Japan

ATA Electronic Ltd.
4th Floor
No. 14, 6th Bldg.
West 3 Street N.E.P.Z.
Kaohsiung, Taiwan

Seagull Industries Co., Ltd.
Roora 705, Kyuwa Mita
Disidence No. 2–1 Mita 3-Chome
Minato-Ku
Tokyo, Japan

Formosa Products Industrial Corp.
58, Li Ming Road
San Ming Dist.
Kaohsiung, Taiwan

Mike Munves Corp.
30 Horton Avenue
New Rochelle, N.Y. 10801

SP-World-Amusement Co., Ltd.

Artic International, Inc.
550 Route 22

Shimada Bldg., 26–1, Higashi Nigiwai-cho, Minami-ku Osaka, Japan	Bridgewater, N.J. 08807
Eastern Distributing Co. P.O. Box 709 Clemmons, N.C. 27012	Loson Electrical Co. No. 1 Alley, 21 Lane 24, Section 5 Yen-Ping North R. Taipei, Taiwan
Shoei, Co., Ltd. 3–9 Tenjincho 4–Chome Fuchu-Shi Tokyo, Japan	Taito Hawaii Corp. Suite 501 2155 Kalakaua Honolulu, Hawaii 96815
Morrison Enterprises Corp. 143 Kung Kuan Road Taichung, Taiwan 400	Taito of Japan 2–5–3 Hirakawa-cho Chiyoda-Ku Tokyo, Japan
International Scientific Co., Ltd. 3–4–10 Koyasu-Cho Hachioji City Tokyo, Japan	David Kamen d/b/a K&K Games 417 North Lincoln Street Bloomington, Ind. 47401
Stan Rousso, Inc. 2277 W. Pico Boulevard Los Angeles, Calif. 90006	Eiko Kogyo Co., Ltd. Tomoeya Bldg., No. 22 Kanda Tomiyamo-cho Chiyoda-Ku Tokyo, Japan
Sepac Co., Ltd. Mauruyo No. 201 3103 Sumiyoshico Nakaku, Yokohama, Japan	Fernandez-Fun Factory 91–246 Oihana Ewa Beach, Hawaii 96706
Jay's Industries 1201 Lakewood Road Toms River, N.J. 08753	K&K Industrial Services 1314 S. King Street Honolulu, Hawaii 96814
Sutra Import Corp. 485 Brown Court Oceanside, N.Y. 11572	Jabras Trade Co., Ltd. P.O. Box 160, Shinjuku Matsui Bldg., 32–10, 3–Chome Shinjuku-Ku Tokyo, Japan
Noma Enterprises Room 902, 14–5 Mita 2-Chome Minato-Ku Tokyo, Japan	Bernard Shapiro d.b.a. Bernie's Specialty 1003 East Camelback Phoenix, Az. 85014

Omni Video Games, Inc.
66 Illinois Avenue
Warwick, R.I. 02888

Chens International, Inc.
39–R Thompson Street
Winchester, Mass. 01890

Ferncrest Distributors, Inc.
66 Illinois Avenue
Warwick, R.I. 02888

Sutra West
12437 East Putnam
Whittier, Calif. 90602

Penn Regal Vending Co.
304 Camer Drive
Cornwells Heights, Pa. 19020

(c) Samuel Bailey, Jr., Unfair Import Investigations Division, U.S. International Trade Commission, 701 E Street NW., Washington, D.C. 20436, shall be the Commission investigative attorney, a party to this investigation; and

(3) For the investigation so instituted, Donald K. Duvall, Chief Administrative Law Judge, U.S. International Trade Commission, 701 E Street NW., Washington, D.C. 20436, shall designate the presiding officer.

Responses must be submitted by the named respondents in accordance with section 210.21 of the Commission's Rules of Practice and Procedure (19 CFR 210.21). Pursuant to sections 201.16(d) and 210.21(b) of the rules, such responses will be considered by the Commission if received not later than 20 days after the date of service of the complaint. Extensions of time for submitting a response will not be granted unless good and sufficient cause therefor is shown.

Failure of a respondent to file a timely response to each allegation in the complaint and in this notice may be deemed to constitute a waiver of the right to appear and contest the allegations of the complaint and this notice, and to authorize the presiding officer and the Commission, without further notice to the respondent, to find the facts to be as alleged in the complaint and this notice and to enter both a recommended determination and a final determination containing such findings.

The complaint, except for any confidential information contained therein, is available for inspection during official working hours (8:45 a.m. to 5:15 p.m.) in the Office of the Secretary, U.S. International Trade Commission, 701 E Street NW., Washington, D.C. 20436, telephone 202–523–0161.

FOR FURTHER INFORMATION CONTACT: Samuel Bailey, Jr., Unfair Import Investigations Division, U.S. International Trade Commission, telephone 202–523–1273.

By order of the Commission.
Issued: June 25, 1981.

KENNETH R. MASON,
Secretary.

In the Matter of CERTAIN MODULAR PUSHBUTTON SWITCHES AND COMPONENTS THEREOF	Investigation No. 337–TA–96

Notice to All Parties

Notice is hereby given that the prehearing conference and hearing scheduled for July 27, 1981 (46 Fed. Reg. 32694, June 24, 1981) are cancelled. At the request of the parties the prehearing conference is rescheduled for August 3, 1981, at 9:00 a.m. in the Dodge Center, Room 201, 1010 Wisconsin Avenue NW., Washington, D.C. and the hearing shall commence immediately thereafter.

The Secretary shall publish this Notice in the Federal Register.

Issued: June 26, 1981.

JANET D. SAXON,
Administrative Law Judge.

Notice of Investigation and Hearing

(TA–203–10)

PORCELAIN-ON-STEEL COOKING WARE

AGENCY: United States International Trade Commission.

ACTION: Upon its own motion and on the basis of a request filed on June 16, 1981, by the United States Trade Representative, the Commission on June 26, 1981, instituted investigation No. TA–203–10 under section 203(i)(2) of the Trade Act of 1974 (19 U.S.C. 2253(i)(2)) for the purpose of gathering information in order that it might advise the President of its judgment as to the probable economic effect on the industry concerned of the reduction or termination of import relief presently in effect with respect to cooking ware (except teakettles) of steel, not having self-contained electrical heating elements, enameled or glazed with vitreous glasses, and valued not over $2.25 per pound, provided for in item 654.02 of the Tariff Schedules of the United States (TSUS). The relief is in the form of a duty increase provided for in TSUS item 923.60 pursuant to Presidential Proclamation 4713 (issued January 16, 1981, 45 F.R. 3561). Import relief presently in effect with respect to such articles is scheduled to terminate in January 1984.

EFFECTIVE DATE: June 26, 1981.

FOR FURTHER INFORMATION CONTACT: Daniel Leahy, Investigator (202–523–1369).

SUPPLEMENTARY INFORMATION:

Public hearing ordered. A public hearing in connection with this investigation will be held in Washington, D.C., at 10 a.m., e.d.t., on Monday, September 14, 1981, in the Hearing Room, U.S. International Trade Commission Building, 701 E Street, NW. Requests for appearances at the hearing should be received in writing by the Secretary to the Commission at his office in Washington no later than the close of business Friday, August 21, 1981.

Prehearing procedures. To facilitate the hearing process, it is requested that persons wishing to appear at the hearing submit prehearing briefs enumerating and discussing the issues which they wish to raise at the hearing. Nineteen copies of such prehearing briefs should be submitted to the Secretary of the Commission no later than the close of business Friday, September 4, 1981. Copies of any prehearing briefs submitted will be made available for public inspection in the Office of the Secretary. While submission of prehearing briefs does not prohibit submission of prepared statements in accordance with section 201.12(d) of the Commission's *Rules of Practice and Procedure* (19 CFR 201.12(d)), it would be unnecessary to submit such a statement if a prehearing brief is submitted instead. Any prepared statements submitted will be made a part of the transcript. Oral presentations should, to the extent possible, be limited to issues raised in the prehearing briefs.

A prehearing conference will be held on Tuesday, August 25, 1981, at 2:00 p.m., e.d.t., in Room 117 of the U.S. International Trade Commission Building.

Persons not represented by counsel or public officials who have relevant matters to present may give testimony without regard to the suggested prehearing procedures outlined above.

Inspection of request. The request filed in this case is available for public inspection at the Office of the Secretary, U.S. International Trade Commission.

By order of the Commission.

Issued: June 29, 1981

KENNETH R. MASON,
Secretary.

In the Matter of CERTAIN AIRTIGHT CAST-IRON STOVES	Investigation No. 337–TA–106

Notice of Investigation and Request for Comments Concerning Proposed Consent Orders

AGENCY: U.S. International Trade Commission.

ACTION: Institution of investigation pursuant to 19 U.S.C. 1337 and request for public comments on proposed consent orders.

SUMMARY: Notice is hereby given that the U S. International Trade Commission, believing that it would be in the public interest for it to investigate alleged violations of section 337 of the Tariff Act of 1930 (19 U.S.C. 1337) occurring in the importation or sale of certain airtight cast-iron stoves, hereby orders the institution of an investigation on its own initiative pursuant to section 337 based on allegations that unfair methods of competition and unfair acts exist in the importation of certain airtight cast-iron stoves into the United States, in their sale, the effect or tendency of which is to destroy or substantially injure an industry or to prevent the establishment of an industry, efficiently and economically operated, in the United States.

The parties to this investigation have entered into consent order agreements. These consent orders would result in termination of this investigation and the imposition of certain requirements on respondents. This notice requests comments on the proposed consent orders within thirty (30)days.

AUTHORITY: The authority for institution of this investigation is contained in section 337 of the Tariff Act of 1930 and in section 210.10(b) of the Commission's Rules of Practice and Procedure. The Consent Order Agreements are filed pursuant to 19 CFR 210.20(b) and public comments are sought in accordance with 19 CFR 211.21.

SCOPE OF THE INVESTIGATION: (a) The unfair methods of competition and unfair acts alleged are as follows:

1. Passing off imported copies of domestic airtight cast-iron stoves and causing the consumer to believe that such imported stoves are the domestic stoves, the effect or tendency of which is to destroy or substantially injure the efficiently and economically operated airtight cast-iron stove industry in the United States.

2. Engaging in false and deceptive advertising for the purpose of furthering the belief on the part of the consumer that the imported stoves are the domestic stoves, the effect or tendency of which is to destroy or substantially injure the efficiently and economically operated airtight cast-iron stove industry in the United States.

3. Infringing the common law trademark protection provided to various airtight cast-iron stove companies because respondents' stoves are virtually identical copies, the effect or tendency of which is to destroy or substantially injure the efficiently and economically operated airtight cast-iron stove industry in the United States.

The investigation has been instituted pursuant to section 337 to determine whether there is a violation of that section, and, if such violation exists, to determine whether relief under subsection (d) or (f) of section 337 would be appropriate.

(b) For the purpose of the investigation so instituted, the following persons, alleged to be involved in the unlawful importation of such products into the United States, or in their sale, are hereby named as respondents:

1. Oriental Kingsworld Industrial Co., Ltd.
   P.O. Box 26–33
   Taipei, Taiwan
2. Franklin Cast Products, Inc.
   1800 Post Road 17, Airport Plaza
   Warwick, R.I. 02886

(c) Donald R. Dinan, U.S. International Trade Commission, 701 E Street NW., Washington, D.C. 20036, is hereby named Commission investigative attorney, a party to this investigation.

Responses must be submitted by the named respondents in accordance with section 210.21 of the Commission's Rules of Practice and Procedure (19 CFR 210.21). The time for such response is suspended during the period of this request for public comments and subsequent Commission consideration pursuant to 19 CFR 211.21 of the consent order agreements.

DATES: Comments will be considered if received within thirty (30) days of the date this notice appears in the *Federal Register*. Comments should conform with Commission Rule 201.8 (19 CFR 201.8) and should be addressed to Kenneth R. Mason, Secretary, U.S. International Trade Commission, 701 E Street NW., Washington, D.C. 20436.

FOR FURTHER INFORMATION CONTACT: Jeffrey S. Neely, Esq., Office of the General Counsel, U.S. International Trade Commission, 701 E Street NW., Washington, D.C. 20436; telephone 202–523–0359.

SUPPLEMENTARY INFORMATION: In connection with the Commission's investigation, under section 337 of the Tariff Act of 1930 (19 U.S.C. 1337), of alleged unfair methods of competition in the importation or sale of certain airtight cast-iron stoves in the United States, the Commission investigative attorney, and respondents Oriental Kingsworld Industrial Co., Ltd. and Franklin Cast Products, Inc. have entered into consent orders. It is proposed that the Commission accept the consent order agreements and issue consent orders incorporating their terms.

The complaint is available for inspection during official working hours (8:45 a.m. to 5:15 p.m.) in the Office of the Secretary, U.S. International Trade Commission, 701 E Street NW., Washington, D.C. 20436, telephone 202–523–0161.

Written comments requested. In view of the Commission's duty to consider the public interest, the Commission requests written comments from interested persons and agencies concerning the effect of the proposed consent orders upon (1) the public health and welfare, (2) competitive conditions in the U.S. economy, (3) the production

of like or directly competitive articles in the U.S., and (4) U.S. consumers. These written comments must be filed with the Secretary to the Commission no later than 30 days after publication of this notice in the Federal Register.

The proposed consent orders. The proposed consent orders are appended to this notice and are being published simultaneously. The consent order involving Franklin Cast has nine sections. The consent order involving Oriental is comprised of sections I, II, III, VII, VIII and IX of the Franklin Cast consent order. The nine sections deal with the following major subject areas:

I. Lists Franklin stoves which will no longer be imported; lists Franklin stoves which may be imported if specified design changes are made; prohibits respondents from engaging in a general group of activities which forms the basis of the passing off, common law trademark infringement and false advertising allegations in the complaint filed in this matter;

II. Respondent's reporting requirements;

IV-V. Respondent's in house program to ensure compliance with the consent order by its personnel;

VII. The Commission's right to examine respondent's records and interview its officers;

VIII. Respondent's right to apply to the Commission for advice, enforcement, modification or termination; and

IX. Time of expiration of the consent order.

Additional information. The original and 19 true copies of all written submissions must be filed with the Secretary to the Commission. Any persons desiring to submit a document (or portion thereof) to the Commission in confidence must request *in camera* treatment. Such request should be directed to the Secretary and must include a full statement of the reasons why the Commission should grant such treatment. The Commission will either accept such submission in confidence or return it. All nonconfidential written submissions will be open to public inspection at the Secretary's office.

By order of the Commission.

Issued: June 29, 1981.

KENNETH R. MASON,
Secretary.

Index

U.S. Customs Service

Treasury Decisions:
- Carriers Bonds 81-179
- Drawback statement for agents 81-181
- Foreign currencies:
  - Variance from quarterly rate; June 29-30, 1981 81-182
  - Certified quarterly rate; July 1-Sept. 30, 1981 81-183
- Synopses of drawback decisions 81-180
  - Hydroxyethlpiperazine 81-180-A
  - Casting and forgings; hot rol'ed steel plate 81-180-B
  - Electronic assemblies, cables, harnesses, etc 81-180-C
  - Polyethylene fabric, coated woven 81-180-D
  - Pigments, color paper 81-180-E
  - Paints, marine anti-fouling 81-180-F
  - Steel, carbon metal band saw 81-180-G
  - Casting and forgings 81-180-H
  - Engines, diesel and related components 81-180-I
  - Components for glass container machinery 81-180-J
  - Casting, blanks, detail parts, assemblies 81-180-K
  - Tobacco, scrap; burley 81-180-L
  - Homoveratrylamine; thionyl chloride 81-180-M
  - Insulin salt cake beef; zinc insulin crystals port 81-180-N
  - Potato dextrin 81-180-O
  - Cefoxitin acid hydrate pure 81-180-P
  - Semiconductor sub-assemblies 81-180-R
  - Cocoa butter; chocolate crumb 81-180-S
  - Tubes and pipe 81-180-T
  - Steel strip, sheet, blanks, bars, and plate 81-180-U
  - Aircraft electrical, hydraulic and mechanical parts 81-180-V
  - Parts for bottle filling machines 81-180-W
  - Capacitors, potentiometers, diodes 81-180-X
  - Tungsten carbide blanks, solid 81-180-Y
  - Rotor shafts and castings 81-180-Z

DEPARTMENT OF THE TREASURY
U.S. CUSTOMS SERVICE
WASHINGTON, D.C. 20229

OFFICIAL BUSINESS
PENALTY FOR PRIVATE USE, $300

POSTAGE AND FEES PAID
DEPARTMENT OF THE TREASURY (CUSTOMS)
(TREAS. 552)

U.S. GOVERNMENT PRINTING OFFICE : 1981

15/30

Customs Bulletin

Regulations, Rulings, Decisions, and Notices concerning Customs and related matters

and Decisions

of the United States Court of Customs and Patent Appeals and the United States Court of International Trade

Vol. 15 JULY 29, 1981 No. 30

NEWARK PUBLIC LIBRARY

AUG 10 1981

U. S. GOVT. PUBS.
DEPOSITORY 376

This issue contains

T.D. 81-184 Through 81-187

Slip. Op. 81-57

International Trade Commission Notices

THE DEPARTMENT OF THE TREASURY
U.S. Customs Service

T 1.11/3:

NOTICE

The abstracts, rulings, and notices which are issued weekly by the U.S. Customs Service are subject to correction for typographical or other printing errors. Users may notify the U.S. Customs Service, Logistics Management Division, Washington, D.C. 20229, of any such errors in order that corrections may be made before the bound volumes are published.

For sale by the Superintendent of Documents, U.S. Government Printing Office, Washington, D.C. 20402. Price: $2.25 (single copy domestic); $2.85 (single copy foreign). Subscription price: $85.00 a year domestic; $106.25 a year foreign.

U.S. Customs Service

Treasury Decisions

(T.D. 81-184)

BONDS

Approval and discontinuance of Carrier's Bonds, Customs Form 3587

Bonds of carriers for the transportation of bonded merchandise have been approved or discontinued as shown below. The symbol "D" indicates that the bond previously outstanding has been discontinued on the month, day, and year represented by the figures which follow. "PB" refers to a previous bond, dated as represented by figures in parentheses immediately following, which has been discontinued. If the previous bond was in the name of a different company or if the surety was different, the information is shown in a footnote at the end of the list.

Dated: July 9, 1981.

Name of principal and surety	Date of bond	Date of approval	Filed with district director/area director/amount
BAIR Transport, Inc., P.O. Box 216, Riverside, NJ; motor carrier; St. Paul Fire & Marine Ins. Co.	Oct. 9, 1979	May 14, 1981	Philadelphia, PA $25,000
P. Callahan, Inc., Comly St., and Delaware River, Phila., PA; motor carrier; United Pacific Ins. Co. D 6/22/81	June 23, 1975	July 16, 1975	Philadelphia, PA $50,000
Century Lines, Inc., 3725 Lakeside Ave., Cleveland, OH; motor carrier; Washington International Ins. Co.	May 8, 1981	May 12, 1981	Cleveland, OH $50,000
Chikaskia Valley Trucking, Inc., R.R. 1, Box 22D, Argonia, KS; motor carrier; Tri-State Ins. Co.	Apr. 8, 1981	May 20, 1981	St. Louis, MO $25,000
Mae Weier dba: Chuck's Cartage Co., 5785 Rochelle Dr., Greendale, WI; motor carrier; Fireman's Ins. Co. of Newark, NJ D 5/29/81	May 29, 1980	July 30, 1980	Milwaukee, WI $25,000
Distribution Trucking Co., 3800 S.E. 22nd, Portland, OR; motor carrier; Washington International Ins. Co.	May 4, 1981	May 5, 1981	Portland, OR $25,000

Name of principal and surety	Date of bond	Date of approval	Filed with district director/area director/amount
Dodsworth, Inc., 928 W. 19th St., P.O. Box 366, Erie, PA; motor carrier; Fidelity & Deposit Co. of MD. (PB 5/14/76) D 5/15/81	May 14, 1981	May 15, 1981	Cleveland, OH $50,000
Galveston Truck Lines, Corp., 7415 Wingate, Houston, TX; motor carrier; St. Paul Fire & Marine Ins. Co.	May 5, 1981	May 6, 1981	Houston, TX $25,000
Garafalo & Sons, Inc., 246 Johnston Ave., Jersey City, NJ; motor carrier; Fidelity & Deposit Co. of MD.	Mar. 10, 1981	May 6, 1981	New York Seaport $25,000
Gorski Bulk Transport, Inc., 843 Central Ave, Windsor, Ontario, Canada; motor carrier; Old Republic Ins. Co. (PB 5/18/67) D 5/18/81 [1]	May 18, 1981	May 18, 1981	Detroit, MI $70,000
Hallamore Motor Transportation, Inc., 795 Plymouth St., Holbrook, MA; motor carrier; Seaboard Surety Co. (PB 3/16/68) D 4/23/81 [2]	Mar. 16, 1981	Apr. 24, 1981	Portland, ME $25,000
Hendrie and Company Limited, 3 Peter St., Toronto, Ontario, Canada; motor carrier; St. Paul Fire & Marine Ins. Co.	Dec. 9, 1980	May 18, 1981	Briffalo, NY $25,000
Kramer Trucking Co., Inc., 275 Trumball St., Elizabeth, NJ; motor carrier; St. Paul Fire & Marine Ins. Co. D 5/15/81	Dec. 5, 1971	Dec. 5, 1971	New York Seaport $50,000
Miami Transfer Company, Inc., 10940 N.W., 37th Ave., Miami, FL; motor carrier; The Union Indemnity Ins. Co. of New York.	Apr. 10, 1981	May 12, 1981	Miami, FL $25,000
Motor Express, Inc., P.O. Box 604, Edinburg, TX; motor carrier; Washington International Ins. Co.	Apr. 16, 1981	Apr. 16, 1981	Galveston, TX $25,000
Motor Express, Inc., 500 Bulkley Bldg., 1501 Euclid Ave., Cleveland, OH; motor carrier; Protective Ins. Co. D 5/20/81	Jan. 1, 1977	Jan. 7, 1977	Cleveland, OH $25,000
Quirion Transport Inc., 4516 Laval St., Megantic, Quebec, Canada; motor carrier; Peerless Ins. Co. D 5/15/81	Feb. 23, 1978	Feb. 23, 1978	Portland, ME $25,000
R.A.N. Trucking Co., P.O. Box 128, Rts. 80 & 38, Eau Claire, PA; motor carrier; St. Paul Fire & Marine Ins. Co.	Dec. 3, 1980	May 18, 1981	Newark, NJ $50,000
Spector Freight System, Inc., 1050 Kingery Hwy., Bensenville, IL; motor carrier; Aetna Casualty & Surety Co. D 5/15/81	Nov. 2, 1976	Nov. 2, 1976	Chicago, IL $25,000
Stagg Marine, Inc., 800 David Dr., Suite 225, Morgan City, LA; water carrier; Old Republic Ins. Co.	Jan. 26, 1981	May 11, 1981	New Orleans, LA $50,000
Strothman Express, Inc., 2735 Spring Grove Ave., Cincinnati, OH; motor carrier; Aetna Casualty & Surety Co. D 5/11/81	May 15, 1979	June 11, 1979	Cleveland, OH $50,000

See footnotes at end of table.

Name of principal and surety	Date of bond	Date of approval	Filed with district director/area director/amount
Tajon, Inc., R.D. #5, Mercer, PA; motor carrier; Liberty Mutual Ins. Co. (PB 11/4/71) D 5/5/81	Apr. 30, 1981	May 5, 1981	Cleveland, OH $100,000
Thetford Transport Ltd., 1829 N. Smith Blvd., C.P. 305, Thetford Mines, Quebec, Canada; motor carrier; Northwestern National Ins. Co. of Milwaukee, WI.	May 1, 1981	May 20, 1981	Ogdensburg, NY $50,000
Transocean Transport, Inc., P.O. Box 3234, 930 Hialeah Dr., Suite #5, Hialeah, FL; motor carrier; St. Paul Fire & Marine Ins. Co.	Aug. 25, 1980	Apr. 27, 1981	Miami, FL $25,000
Mae Weier d/b/a Chuck's Cartage Co. See Chuck's Cartage Co.			

[1] Principal is Mr. Thaddeus A. Gorski dba: Gorski Bulk Transport; Surety is St. Paul Fire & Marine Ins. Co.

[2] Principal is Hallamore Motor Transportation, Inc. and/or Kennebec Trucking Co., Inc. Surety is Peerless Ins. Co.

(BON-3-03)

GEORGE C. STEUART
(For Marilyn G. Morrison, Director,
Carriers, Drawback and Bonds Division).

(T.D. 81-185)

19 CFR Parts 18 and 24

Acceptance of Customs Seals; New Seal Standards

AGENCY: U.S. Customs Service, Department of the Treasury.

ACTION: Final rule.

SUMMARY: This document amends the Customs Regulations to provide new standards for car, compartment, and package seals used in sealing openings, packages, conveyances, or articles requiring the security provided by such sealing. In addition, a new, less restictive procedure to obtain Customs acceptance of those seals has been adopted. This action is being taken to (1) establish uniform comprehensive seal standards, and (2) simplify the procedure which makes Customs-accepted seals available for use in domestic and international commerce.

EFFECTIVE DATE: August 17, 1981.

FOR FURTHER INFORMATION CONTACT: Allard P. D'Heur, Cargo Processing Division, U.S. Customs Service, 1301 Constitution Avenue, NW., Washington, D.C. 20229 (202–566–5354).

SUPPLEMENTARY INFORMATION:

BACKGROUND

All imports entering the United States come under Customs custody and control. Customs assures the collection of lawful duties and taxes on imported merchandise, submission of necessary documents, and compliance with other legal requirements by requiring that Customs bonds be furnished as security by importers, carriers, and other members of the importing community. Certain merchandise imported *in bond* is required to be sealed or the package, compartment, or car in which the merchandise is entered must be sealed to protect its integrity. Various seals have been approved by Customs for that purpose.

In accord with former procedures, manufacturers wishing to have car, compartment, or package seals approved by Customs had to send an application for approval along with a sample of the seal to Customs Headquarters for examination and testing. Customs technical personnel would perform various tests to determine that the seal met Customs standards suitable to the intended use of the seal. Approved seals then were made available to qualified purchasers from either the manufacturer or any of the district directors of Customs.

NOTICE OF SUSPENSION OF SEAL APPROVAL

Because it had been determined that Customs standards for the approval of seals for Customs use no longer reflected current security technology, by a notice published in the Federal Register on January 12, 1978 (43 FR 1806), Customs announced that it would not consider new applications for the approval of seals until new standards were adopted. The notice stated that after adoption of new standards, seals which had been approved might be subject to retesting and reapproval at a later date. The notice also informed the public that Customs was reviewing its technical standards and requirements for approval of all types of Customs seals and invited public participation in establishing revised standards and requirements.

Both of the comments received in response to the notice sugggested standards for Customs seals, with one comment devoted almost entirely to "high-security" seals.

FINAL RULE

The notice of suspension of Customs approval of new applications for seals was premised on the need for more stringent seal standards.

Since the publication of that document, however, Customs has revised its policy concerning desirable characteristics for seals. After considering various new standards, Customs has determined that its seal standards should be based upon existing international guidelines developed by the Customs Cooperation Council ("CCC").

The CCC, an intergovernmental organization made up of 89 nations with Headquarters in Brussels, Belgium, deals exclusively with customs matters. Its objective is to obtain, in the interest of international trade, the best possible degree of uniformity and harmony between the customs systems of its member nations. The CCC guidelines were set forth in the June 11, 1968, Recommendation of the Customs Cooperation Council concerning Customs Sealing Systems in connection with the International Transport of Goods, and Annex 2 of the Customs Convention on the International Transit of Goods ("ITI Convention" of June 7, 1971). The standards which are the subject of this amendment are substantially in accord with those international guidelines.

In addition, Customs future acceptance of seals will be based on a manufacturer's attestation that the seals meet or exceed the performance standards described in the amendment rather than by Customs testing of individual seals. If testing is required, it will be performed by the manufacturer or by a private laboratory. Manufacturers will be required to send Customs the seal attestation and, if deemed necessary by Customs, the test record.

Finally, all Customs approvals of seals which already have been granted will be rescinded 150 days after the date of publication of this document in the Federal Register, and no further Customs tests or direct Customs approvals of seals (as opposed to Customs acceptance of seals the standards of which are attested to by a manufacturer) will occur. Manufacturers of any seal already approved by Customs under the previous procedure will have 120 days from the effective date of this document to attest to Customs that the seal meets or exceeds the new standards.

INAPPLICABILITY OF EXECUTIVE ORDER 12291 AND REGULATORY FLEXIBILITY ACT

It has been determined that these amendments do not meet the criteria for a "major rule" specified in section 1(b) of E.O. 12291. Accordingly, no regulatory impact analyses were required, and none have been prepared for this regulatory project.

In addition, the provisions of section 3 of the Regulatory Flexibility Act requiring regulatory flexibility analyses (5 U.S.C. 603, 604) are not applicable to the amendments because, as noted above, a

notice document was published in the Federal Register prior to January 1, 1981, the effective date of the Act.

DRAFTING INFORMATION

The principal author of this document was Todd J. Schneider, Regulations and Information Division, Office of Regulations and Rulings, U.S. Customs Service. However, personnel from other Customs offices participated in its development.

AMENDMENTS TO THE REGULATIONS

Parts 18 and 24, Customs Regulations (19 CFR Parts 18, 24), are amended as set forth below.

PART 18—TRANSPORTATION IN BOND AND MERCHANDISE IN TRANSIT

1. Section 18.4(a)(2) is amended by deleting the word "valid" in the first sentence.

2. Section 18.4(d) is amended to read as follows:

18.4 Sealing conveyances and compartments; labeling packages; warning cards.

* * * * * * *

(d) The seals to be used in sealing conveyances, compartments, or packages must meet Customs standards provided in section 24.13a of this chapter, and may be obtained in accordance with section 24.13 of this chapter. (R.S. 251, as amended, secs. 552, 553, 46 Stat. 742, as amended, sec. 624, 46 Stat. 759 (19 U.S.C. 66, 1552, 1553, 1624)).

PART 24—CUSTOMS ACCOUNTING AND FINANCIAL PROCEDURE

1. Paragraph (a), the first sentence of paragraph (c), and paragraph (d) of section 24.13 are amended to read as follows:

24.13 Car, compartment, and package seals; kind, procurement.

(a) Customs seals accepted pursuant to section 24.13a of this chapter shall be used in sealing openings, packages, conveyances, or articles requiring the security provided by such sealing.

* * * * * * *

(c) Carriers of merchandise or their commercial associations or comparable representatives approved by the district director of Customs (see paragraph (f) of this section) shall manufacture or purchase quantity supplies of in-bond and in-transit seals accepted by Customs pursuant to the provisions of section 24.13a of this chapter. * * *

(d) The manufacturer or supplier shall ship the seals to the consignee named in the order and shall advise the district di-

rector for the Customs district to which the seals are shipped as to the kind and quantity of seals shipped, the name of the port (where required), serial numbers, and symbol number (where required) stamped thereon, the name and address of the consignee, and the date of shipment.

2. The section heading and section 24.13a are amended to read as follows:

24.13a Car, compartment, and package seals; and fastenings; standards; acceptance by Customs.

(a) *General standards.* The seals and fastenings, together, shall

(1) Be strong and durable;

(2) Be capable of being affixed easily and quickly;

(3) Be capable of being checked readily and identified by unique marks (such as a logotype) and numbers;

(4) Not permit removal or undoing without breaking, or tampering without leaving traces;

(5) Not permit use more than once; and

(6) Be made as difficult as possible to copy or counterfeit.

(b) *Seal specifications.*

(1) The shape and size of the seal shall be such that any identifying marks are readily legible.

(2) Each eyelet in a seal shall be of a size corresponding to that of the fastening used, and shall be positioned so that the fastening will be held firmly in place when the seal is closed.

(3) The material used shall be sufficiently strong to prevent accidental breakage, early deterioration (due to weather conditions, chemical action, etc.) or undetectable tampering under normal usage.

(4) The material used shall be selected with reference to the sealing system used.

(c) *Fastening specifications.*

(1) The fastening shall be strong and durable and resistant to weather and corrosion.

(2) The length of the fastening used shall not enable a sealed aperture to be opened or partly opened without the seal or fastening being broken or otherwise showing obvious damage.

(3) The material used shall be selected with reference to the sealing system used.

(d) *Identification marks.*

(1) If the seal is to be purchased and used by U.S. Customs, the seal or fastening, as appropriate, shall be marked to show that it is a U.S. Customs seal by application of the words "U.S. Customs" and a unique identification number on the seal.

(2) If the seal is to be used by private industry (i.e., a shipper, manufacturer, or carrier), it must be clearly and legibly marked with a unique company name or (logotype) and identification number.

(e) *Customs acceptance.* Seals will be considered as acceptable for use and/or purchase by U.S. Customs as soon as the manufacturer attests that the seals have been tested and meet or

349-005 0 - 81 - 2

exceed the standards provided in paragraphs (a) through (d) of this section, and will continue to be considered acceptable until such time as it is demonstrated that they do not meet the standards. A manufacturer may attest to the qualification of a specific seal, or to an entire product line of seals as of a certain date. Any addition of a seal to a group of seals attested to as a group would require specific acceptance of that seal by Customs.

(f) *Testing.* All testing of seals deemed necessary before Customs acceptance will be done by the manufacturer or by a private laboratory, and not by Customs. However, Customs reserves the right to test, or to have tested, seals that have been accepted by Customs.

(g) *Records.* The manufacturer's attestation that a seal meets or exceeds the standards specified in this section and, if deemed necessary by Customs, the seal test record shall be sent to the Director, Office of Inspection, Cargo Processing Division, Headquarters, U.S. Customs Service, 1301 Constitution Avenue, NW., Washington D.C. 20229. (R.S. 251, as amended, secs. 552, 553, 46 Stat. 742, as amended, sec. 624, 46 Stat. 759 (19 U.S.C. 66, 1552, 1553, 1624)).

WILLIAM T. ARCHEY,
Acting Commissioner of Customs.

Approved: May 27, 1981.

JOHN P. SIMPSON,
Acting Assistant Secretary of the Treasury.

[Published in the Federal Register July 16, 1981 (46 F.R. 36841)]

(T.D. 81-186)

Bonds

Approval and discontinuance of consolidated aircraft bonds (air carrier blanket bonds), Customs Form 7605.

The following consolidated aircraft bonds have been approved or discontinued as shown below. The symbol "D" indicates that the bond previously outstanding has been discontinued on the month, day, and year represented by the figures which follow. "PB" refers to a previous bond, dated as represented by the figures in parentheses immediately following, which has been discontinued. If the previous bond was in the name of a different company or if the surety was different, the information is shown in a footnote at the end of the list.

Dated: July 13, 1981.

Name of principal and surety	Date term commence	Date of approval	Filed with district director/area director/amount
Republic Airlines, Inc., 7500 Airline Dr., Minneapolis, MN; Aetna Casualty & Surety Co.	July 1, 1981	May 7, 1981	Minneapolis, MN $100,000
Republic Airlines West, Inc., 7500 Airline Dr., Minneapolis, MN; Aetna Casualty & Surety Co. (PB 10/1/80) D 6/30/81 [1]	July 1, 1981	May 7, 1981	Minneapolis, MN $100,000
United Air Lines, Inc., P.O. Box 66100, Chicago, IL; Federal Ins. Co. (PB 7/10/61) D 6/26/81 [2]	Apr. 29, 1981	June 26, 1981	Chicago, IL $100,000

[1] Surety is Safeco Ins. Co. of America.
[2] Principal is United Air Lines.

The foregoing principals have been designated as carriers of bonded merchandise.

BON-3-01

GEORGE C. STEUART,
(For Marilyn G. Morrison, Director,
Carriers, Drawback and Bonds Division).

T.D. 81-187

Foreign Currencies—Variances From Quarterly Rate

The following rates of exchange are based upon rates certified to the Secretary of the Treasury by the Federal Reserve Bank of New York, pursuant to Section 522(C), Tariff Act of 1930, as amended (31 USC 372(c)), and reflect variances of 5 per centum or more from the quarterly rate published in Treasury Decision 81-82 for the following countries. Therefore, as to entries covering merchandise exported on the dates listed, whenever it is necessary for Customs purposes to convert such currency into currency of the United States, conversion shall be at the following rates.

Austria schilling:

June 22, 1981	$0. 059835
June 23, 1981	. 059997
June 24, 1981	. 059737
June 25, 1981	. 059524
June 26, 1981	. 058997

Belgium franc:	
June 22, 1981	$0. 025826
June 23, 1981	. 025934
June 24, 1981	. 025800
June 25, 1981	. 025589
June 26, 1981	. 025543
Brazil cruziero:	
June 22–24, 1981	$0. 011151
June 25–26, 1981	. 010941
Peoples Republic of China yuan:	
June 22, 1981	$0. 568214
June 23–26, 1981	. 571070
Denmark krone:	
June 22, 1981	$0. 134318
June 23, 1981	. 135017
June 24, 1981	. 134273
June 25, 1981	. 133467
June 26, 1981	. 133422
Finland markka:	
June 22, 1981	$0. 225963
June 23, 1981	. 227247
June 24, 1981	. 226963
June 25, 1981	. 225530
June 26, 1981	. 224568
France franc:	
June 22, 1981	$0. 177730
June 23, 1981	. 176476
June 24, 1981	. 176211
June 25, 1981	. 174886
June 26, 1981	. 174978
Germany deutches mark:	
June 22, 1981	$0. 423191
June 23, 1981	. 424538
June 24, 1981	. 421941
June 25, 1981	. 417973
June 26, 1981	. 418760
Ireland pound:	
June 22, 1981	$1. 5440
June 23, 1981	1. 5525
June 24, 1981	1. 5440
June 25, 1981	1. 5265
June 26, 1981	1. 5295

Italy lira:	
June 22, 1981	$0. 000848
June 23, 1981	. 000850
June 24, 1981	. 000847
June 25–26, 1981	. 000840
Japan yen:	
June 22–24, 1981	Quarterly
June 25, 1981	$0. 004436
June 26, 1981	. 004447
Netherlands guilder:	
June 22, 1981	$0. 380228
June 23, 1981	. 382117
June 24, 1981	. 379651
June 25, 1981	. 376081
June 26, 1981	. 376790
New Zealand dollar:	
June 22, 1981	$0. 8600
June 23, 1981	. 8625
June 24, 1981	. 8608
June 25, 1981	. 8565
June 26, 1981	. 8540
Norway krone:	
June 22, 1981	$0. 169147
June 23, 1981	. 168990
June 24, 1981	. 168848
June 25, 1981	. 167574
June 26, 1981	. 166182
Portugal escudo:	
June 22, 1981	$0. 015898
June 23, 1981	. 015962
June 24, 1981	. 015911
June 25, 1981	. 015848
June 26, 1981	. 015711
Republic of South Africa rand:	
June 22, 1981	$1. 1497
June 23, 1981	1. 1527
June 24, 1981	1. 1500
June 25, 1981	1. 1418
June 26, 1981	1. 1370
Spain peseta:	
June 22, 1981	$0. 010610
June 23, 1981	. 010654
June 24, 1981	. 010574
June 25, 1981	. 010547
June 26, 1981	. 010444

Sweden krone:	
June 22, 1981	$0.198906
June 23, 1981	.199402
June 24, 1981	.198708
June 25, 1981	.197122
June 26, 1981	.196850
Switzerland franc:	
June 22, 1981	$0.486855
June 23, 1981	.491642
June 24, 1981	.490798
June 25, 1981	.490436
June 26, 1981	.493097
United Kingdom pound:	
June 22, 1981	$1.9918
June 23, 1981	1.9982
June 24, 1981	1.9790
June 25, 1981	1.9530
June 26, 1981	1.9490

(LIQ-03-01 O:C:E)

Date: June 25, 1981.

KENNETH A. RICH,
Chief,
Customs Information Exchange.

Recent Unpublished Customs Service Decisions

The following listing of recent administrative decisions issued by the Office of Regulations and Rulings, U.S. Customs Service, and not otherwise published, is published for the information of Customs officers and the importing community. Although the decisions are not of sufficient general interest to warrant publication as Treasury Decisions, the listing describes the issues involved and is intended to aid Customs officers and concerned members of the public in identifying matters of interest which recently have been considered by the Office of Regulations and Rulings.

A copy of any decision included in this listing, identified by its date and file number, may be obtained in a form appropriate for public distribution upon written request to the Office of Regulations and Rulings, Attention: Legal Retrieval and Dissemination Branch, Room 2404, U.S. Customs Service, 1301 Constitution Avenue, N.W., Washington, D.C. 20229. These copies will be made available at a cost to the requester of $0.10 per page. However, the Customs Service will waive this charge if the total number of pages copied is ten or less.

Decisions listed in earlier issues of the Customs Bulletin, through February 2, 1981 are available in microfiche format at a cost of $30.90** ($0.15 per sheet of fiche). It is anticipated that additions to the microfiche will be made quarterly and subscriptions are available. Requests for the microfiche now available and for subscriptions should be directed to the Legal Retrieval and Dissemination Branch. Subscribers will automatically receive updates as they are issued and will be billed accordingly.

Dated: July 15, 1981.

B. JAMES FRITZ,
Director,
Regulations Control and Disclosure Law Division.

Date of decision	Number	Issue
5–29–81	065412	Classification: moon boots (700.56, 700.57, 700.58)
6– 5–81	065700	Classification: filter dryers used with mechanical refrigeration systems (661.20, 661.95)

Date of decision	Number	Issue
5–29–81	065766	Classification: automatic record cleaner (389.50)
6– 5–81	065808	Classification: linch pin used with a three point hitch attachment on a tractor (666.00)
5–28–81	065826	Classification: scale model clapboard siding (737.95)
6– 2–81	066391	Classification: country of origin: two piece and three piece suits
6– 5–81	066562	Classification: bulk feed aud grain trailers (692.03, 692.32)
6– 2–81	066725	Classification: steel plates used in the assembly of land leveling equipment (664.08, 666.00)
6– 2–81	066890	Classification: end caps and cone backing rings (690.25, 690.35)
6– 2–81	066974	Classification: rotary screens (668.50)
5–29–81	066983	Classification: auxiliary lamp for night driving (653.39, 692.32)
6– 2–81	068018	Classification: dyed, stretched nylon yarn (310.02, 310.11)
6–10–81	068048	Classification: moon boot shells (700.60)
6– 2–81	068053	Classification: musical juggling Santa (725.50, 737.80)
6– 5–81	068170	Classification: diesel fuel (475.05, 475.10)
6–30–81	068293	Classification: miniature revolver, jewelry attachments, blank ammunition (730.15, 730.17, 730.19, 730.81, 730.91, 740.30, 740.38, 774.55)
6– 9–81	068312	Classification: toy figures known as "Jolly Beans" (737.40, 737.95)
6–18–81	068367	Classification: moon boot shells (700.60)
6–16–81	068376	Classification: moon boot shells (700.60)
5–29–81	068378	Classification: women's casual shoe (700.60)
5–27–81	068385	Classification: women's high wedge, open toe and open back casual shoe (700.60)
5–18–81	068473	Classification: khaki woven cotton safari jacket and military-style woven cotton shirt (380.09, 380.27, 380.12)
6– 2–81	068475	Classification: stretch cords (389.62)
6–25–81	068509	Classification: UFO toy spinning top (682.95)
5–29–81	068516	Classification: catalytic waste containing metallic platinum (605.70, 793.00)
6– 4–81	105055	Vessels: application of coastwise laws to the operation of a foreign mobile drilling platform on the U.S. Continental Shelf
6–19–81	105096	Vessels: fish nets imported into the U.S. for placement on vessels other than the importing vessel are subject to entry as importation of merchandise, 19 U.S.C. 1202, rather than as equipment purchased under 19 U.S.C. 1466
6–12–81	105120	Instruments of International Traffic: bobbins, a/k/a wrapper rolls used to transport die cuts of wrapper tobacco are instruments of international traffic pursuant to 19 U.S.C. 1322(a)

Date of decision	Number	Issue
6–19–81	105153	Vessels: specifications which qualify a tug as a special purpose vessel pursuant to 19 U.S.C. 1466(e)
6–16–81	105163	Vessels: transfer of a fishing net under lease to a Canadian vessel together with two crewmen to accompany the net as advisors for its use does not constitute a violation of the coastwise laws, 46 U.S.C. 289, 46 U.S.C. 883
6–11–81	105180	Vessels: transportation of merchandise in a foreign-flag vessel between the U.S. and Guam would violate 46 U.S.C. 883 unless issued a restricted register, pursuant to 46 U.S.C. 11, qualifying the foreign-flag vessel to engage in trade with Guam
6–17–81	105196	Vessels: reporting requirements and dutiable status of a yacht owned by an alien residing in the United States who is also the spouse of a U.S. citizen residing abroad
3–17–81	800321	Classification: high speed, dedicated data processor (676.15, 676.30, 722.12)
4– 1–81	800309	Classification: tractor (692.34)
4– 2–81	800315	Classification: diesel engine tractor (692.34)
4–14–81	800378	Classification: brass candleholders, wall hooks, shoe horns and picture frames (651.49, 652.70, 653.35, 654.03)
4– 2–81	800383	Classification: toy drawing and writing slates (737.95)
6– 4–81	800395	Classification: rubber soled soccer shoes (700.60, 700.67)
4–29–81	800399	Classification: tractor chassis (692.34)
4–20–81	800433	Classification: subscriber traffic generator (688.45, 864.30)
4–21–81	800441	Classification: feed force monitoring system/automatic gauging and tool wear compensation system (674.50, 674.55, 712.49)
4–21–81	800464	Classification: Complex NTC 304—Lipophase, Hydrophase (432.25, 465.10, 799.00)
5–15–81	800476	Classification: bulk-packed medicated chewing gum (411.56)
5–29–81	800540	Classification: polypropylene strips (309.20, 774.55)
5–20–81	800552	Classification: Gamlen K–19 Concentrate (430.20)
5–18–81	800565	Classification: upholstery pigskin leather (121.50)
5–22–81	800593	Classification: tractors (692.34)
5–15–81	800597	Classification: wire rope making machinery (664.10, 670.90)
5–26–81	800600	Classification: men's and women's cotton knit shirts (380.06, 382.06)
5–22–81	800602	Classification: CRT display monitor & electric piano component (676.15, 685.19, 725.47)
5–29–81	800604	Classification: copper strip in coils and tin-bearing copper strip in coils (612.31, 612.44, 612.45)
5–11–81	800608	Classification: toy feet (737.95)

349-005 0 - 81 - 3

Date of decision	Number	Issue
5-26-81	800609	Classification: machines used in the manufacture of printed circuit boards (661.68, 662.50, 674.35, 678 50)
5-15-81	800610	Classification: stretch loops (389.70)
5-20-81	800611	Classification: triangular dinner gong, electric tea kettle & stainless steel tongue cleaner (652,60, 684.20)
5-22-81	800612	Classification: tractor (692.34)
5-22-81	800613	Classification: tractor (692.34)
5-19-81	800615	Classification: hand-carved gourds (748.32)
5-29-81	800617	Classification: food coloring: FD and C Yellow No. 5 (409.66)
5-29-81	800623	Classification: disc mowers (666.00)
6- 3-81	800632	Classification: quilted nylon taffeta ski mitten (734.97, 735.06)
6- 9-81	800636	Classification: incomplete rectangular plastic chicken layiug and rearing cage (666.00)
5-22-81	800637	Classification: chain saw head (674.42)
5-15-81	800638	Classification: witch doll cake decoration (737.22)
5-15-81	800645	Classification: 6-Tertiary-Butyl-2, 4-Xylenol, a phenol (403.51)
6- 1-81	800647	Classification: ladies sweaters (382.78)
5-20-81	800657	Classification: compression nut (646.42)
5-22-81	800660	Classification: channel nut (646.56, 923.52)
5-26-81	800662	Classification: monochrome cathode ray tube (676.52)
5-29-81	800665	Classification: long-sleeved cotton knit pullover shirt with zipper opening at neck (382.00)
5-20-81	800667	Classification: grounding clamps (657.35)
6- 8-81	800670	Classification: game (734.20)
6- 8-81	800676	Classification: solar heater collectors (661.65)
6- 5-81	800860	Classification: lace motifs and textile articles (351.80, 389.62)
6- 1-81	800681	Classification: wood picture holder and bread knife (206.60, 650.21)
6- 1-81	800683	Classification: polyester fabric (338.30)
5-21-81	800684	Classification: air purifier (661.95)
6- 1-81	800686	Classification: ladies sweater (382.04)
6- 3 81	800688	Classification: man's sport shirt (380.84)
6- 1-81	800692	Classification: fiberglass auto parts (770.10)
5-22-81	800695	Classification: reactor-process vessel (661.68)
6- 5-81	800703	Classification: cotton knit panties (378.15)
6- 4-81	800709	Classification: tractors (692.34)
6- 1-81	800711	Classification: man's woven cotton western shirt (380.27)
6- 3-81	800714	Classification: polyethylene resin pellets (445.30)
6- 4-81	800715	Classification: guayabera style men's sport shirt (380.04)
6- 1-81	800718	Classification: wooden tables and chairs (727.25, 727.29, 727.35)
6- 5-81	800722	Classification: cotton hot pads (366.79)

Date of decision	Number	Issue
6- 1-81	800731	Classification: semi-finished tufted floor coverings (360.70)
6- 8-81	800751	Classification: propane tanks (693.32)
6- 4-81	800752	Classification: floor standing simple modular system: furniture (727.35)
6- 5-81	800762	Classification: leather and cotton work gloves (705.35, 705.48)
6- 8-81	800779	Classification: printed matter (274.75)

United States Court of International Trade

One Federal Plaza
New York, N.Y. 10007

Chief Judge

Edward D. Re

Judges

Paul P. Rao
Morgan Ford
Scovel Richardson
Fredrick Landis
James L. Watson
Herbert N. Maletz
Bernard Newman
Nils A. Boe

Senior Judge

Samuel M. Rosenstein

Clerk

Joseph E. Lombardi

Decision of the United States Court of International Trade

(Slip Op. 81–57)

SCM CORPORATION, PLAINTIFF *v.* UNITED STATES, DEFENDANT

BROTHER INTERNATIONAL CORPORATION, PARTY-IN-INTEREST

Court No. 77–4–00553

Memorandum and Order

(Dated July 1, 1981)

NEWMAN, *Judge:* Plaintiff ("SCM")—a domestic portable typewriter manufacturer—challenges, pursuant to 19 U.S.C. § 1516(c)

(1976), the negative antidumping injury determination made on June 19, 1975 by the United States International Trade Commission ("Commission") in the case of *Portable Electric Typewriters From Japan*, U.S.I.T.C. Public 732, Investigation No. AA1921–145 (40 FR 27079 (1975)). Brother International Corporation ("Brother")—an importer of portable electric typewriters ("PETs") from Japan and the consignee of New York, N.Y. Consumption Entry No. 77–302804, the immediate subject of the instant action—appears as the party-in-interest pursuant to 19 U.S.C. § 1516(f).

Presently before me are: plaintiff's motion for judgment directing the Secretary of Commerce to publish a finding of dumping covering PETs from Japan; defendant's cross-motions, in the alternative, to dismiss on the ground of mootness, to stay the instant proceedings pending final disposition of the issues involved in *Nakajima All Co., Ltd.* v. *United States*, Court No. 80–6–00933, and *Silver Reed America, Inc.* v. *United States*, Court No. 80–6–00934, or to remand the instant proceedings to the Commission for reconsideration of its negative injury determination upon the basis of the record in the instant matter supplemented by the record in *Portable Electric Typewriters From Japan*, Investigation No. 731–TA–12, 45 FR 30186 (1980), a subsequent injury investigation involving PETs from Japan wherein the Commission made an affirmative determination; and also a cross-motion of the party-in-interest for summary judgment (which is a renewal of a prior cross-motion).[1]

I

The pertinent history of this litigation follows:[2]

In its Investigation No. AA1921–145, the Commission determined, by a three to two vote with one abstention, that an industry in the United States is not being or likely to be injured or prevented from being established by reason of PETs from Japan sold at less than fair value ("LTFV") within the meaning of the Antidumping Act, as amended (19 U.S.C. § 160 *et seq.* (1970) & Supp. V 1975).[3]

Although the imported articles found to be sold at LTFV by Treasury[4] and covered by the Commission's notice of investigation

[1] The parties have filed twelve briefs relating to the motion and cross-motions presently before me, the latest of which was submitted on March 16, 1981.

[2] For a more complete history of this action see 80 Cust. Ct. 226, C.R.D. 78-2, 450 F. Supp. 1178 (1978) and 84 Cust. Ct. ——, C.R.D. 80-2, 487 F. Supp. 98 (1980). See also 79 Cust. Ct. 163, C.R.D. 77-6, 435 F. Supp. 1224 (1977), denying plaintiff's motion for assignment of this case to a three judge panel.

[3] Chairman Leonard and Commissioners Bedell and Parker determined in the negative, while Commissioners Moore and Ablondi determined in the affirmative, Vice-Chairman Minchew abstained from voting.

[4] The authority for administering the antidumping law was transferred from the Secretary of the Treasury to the Secretary of Commerce, effective January 2, 1980. *Reorganization Plan No. 3 of 1979*, 44 FR 69273 (1979); *Exec. Order 12188*, 45 FR 989 (1980).

were PETs, for purposes of identifying "what is the industry most likely to be affected" by the imported articles, the majority considered, alternatively, the facilities devoted to the production of all portable typewriters (both electric and manual) or the facilities devoted to the production only of PETs. The majority found that in either instance the affected domestic industry was SCM, the sole United States producer of portable typewriters, both electric and manual.

While acknowledging that imports of PETs from Japan sold at LTFV had obtained a significant share of the United States market for portable typewriters during the period of the Treasury Investigation (October 1973 through March 1974), the majority concluded that "imports penetration alone is not an adequate basis for determining injury" (40 FR 27080). Chairman Leonard considered "that import penetration indicates injury only when it is established that the penetration is at the expense of the domestic industry *and causes lost sales*" (40 FR 27080, fn. 2) (Emphasis added). Implicitly, therefore, Chairman Leonard found there were no lost sales. However, the majority's Statement of Reasons reveals no specific finding concerning lost sales. The dissenting Commissioners, on the other hand, found that SCM "has clearly lost a considerable share of the market and *consequently lost considerable sales*" (40 FR 27081) (emphasis added).

The majority further found that, other than market penetration, none of the tests of injury applied in this case showed that an industry in the United States is being or is likely to be injured. The other tests indicated that the domestic industry had prospered, and was likely to continue to grow and expand notwithstanding the fact that it did not produce certain types of low end PETs.

In February 1979, plaintiff filed a motion for summary judgment contending that several aspects of the Commission's negative injury determination were erroneous as a matter of law, and that an affirmative injury determination should have been made. Thereupon, defendant and the party-in-interest filed cross-motions for summary judgment.

On March 7, 1980 Chief Judge Re issued an opinion, finding certain deficiencies in the majority's Statement of Reasons for the determination under review. *SCM Corporation* v. *United States* (*Brother International Corporation, Party-in-Interest*), 84 Cust. Ct. ——, C.R.D. 80–2, 487 F. Supp. 96 (1980). Chief Judge Re stated, *inter alia:*

> Congress has not only directed the ITC to state its determinations but has also required the agency to *explain* those determinations. The statutory requirements of "a statement

of reasons," imposed by the 1958 amendments to the Antidumping Act, and the "complete statement of findings and conclusions" imposed by the Trade Act of 1974, are clearly consistent with applicable decisional law. For the ITC these requirements are specifically mandated by the pertinent statutory provisions.

The ITC determination in this case nominally includes the majority's "Statement of Reasons." In substance, however, the statements are really mixed conclusions of ultimate facts and statutory interpretation, rather than reasons. The ITC has stated the conclusions which presumably are the result of its reasoning, but it has neither supplied nor articulated the reasons which support those conclusions.

An illustration is the conclusion that significant market penetration alone is not an adequate basis for determining injury. This is a major policy determination with broad and significant implications in the interpretation and administration of the antidumpiug law. Clearly, Congress intended the ITC to develop and refine the very general concept of injury as it is applied to individual cases. This responsibility is not adequately discharged in a case in which the ITC determination is neither clearer nor more specific that the statutory language itself.

When the ITC fails to delineate and make explicit the basis for the conclusions, by articulating a rational connection between the facts found and the discretionary action taken, the court cannot decide, as it must, whether the ITC has exercised a reasoned discretion consistent with legislative intent.

In order for the court to perform its function of judicial review, this proceeding is stayed, and the ITC will be afforded an additional opportunity to supply this court with the reasons supporting its conclusions * * *. [487 F. Supp. at 108.] [Emphasis added.]

Thus, the Court in essence did not grant or deny the motion or cross-motions for summary judgment. Rather, such motions were held in abeyance and the following direction was issued:

it is ordered that this proceeding be stayed for such necessary time, not to exceed 90 days, as the ITC may require to supply the court with a more specific and explicit statement of reasons for the conclusions that: (1) The affected "industry" was limited to, alternatively, the facilities devoted to the production of all portable typewriters, or, the production of portable electric typewriters; and (2) significant market penetration by less than fair value imports alone is not an adequate basis for determining injury. [*id.*]

II

While this action was pending, plaintiff filed a petition on April 9, 1979 for the initiation of a second antidumping proceeding covering PETs from Japan containing updated information. Subsequently,

on March 18, 1980 the Secretary of Commerce issued an affirmative determination of sales at LTFV in that proceeding (45 FR 18416 (1980)); on May 7, 1980 the Commission announced an affirmative injury determination in the case of *Portable Electric Typewriters From Japan*, U.S.I.T.C. Public 1062, Investigation No. 731–TA–12, 45 FR 30186 (1980); and on May 9, 1980 the Secretary of Commerce published an antidumping duty order (45 FR 30618 (1980)).

III

Consequently, we are faced with the following scenario:

In its first PET investigation, the Commission on June 19, 1975 made a negative injury determination;

On March 7, 1980 Chief Judge Re remanded this action to the Commission to "supply the Court with a more specific and explicit statement of reasons";

On May 7, 1980 in its second PET investigation (relative to the second petition) the Commission announced an affirmative injury determination, and an antidumping order followed on May 9, 1980;

On June 5, 1980 defendant moved to dismiss the instant action on the ground that it was rendered moot by the antidumping duty order issued on May 9, 1980. Alternatively, defendant moved for an extension of time within which the Commission could comply with the remand order in C.R.D. 80–2;

On July 10, 1980 plaintiff filed a memorandum in opposition to defendant's motion to dismiss, arguing that the case was not moot for two reasons: (a) the new antidumping duty order on which defendant's mootness argument was based had been challenged in this Court by Japanese import-export interests, and as long as that order or any subsidiary determination is susceptible of being judicially overturned, the subject Court proceeding is not moot; (b) moreover, interested parties could in the future attempt to obtain reconsideration of the antidumping duty order on the basis of an alleged change of circumstances, and in such event, issues raised in the subject Court proceeding could once again become central to the determination which the Commission would necessarily make;

On October 2, 1980 Chief Judge Re entered an unpublished order which denied defendant's motion to dismiss on the ground of mootness, and granted the Commission 30 days from that date in which to comply with the remand order. That order of October 2, 1980 reassigned the present case to the writer.

In this setting, Chairman Alberger, writing for the Commission, mailed to me on or about October 31, 1980 an undated letter reading in pertinent part (at 2):

On October 1, 1980, Chief Judge Re denied the Commission's motion [to dismiss], transferred this case to Your Honor [the writer], and ordered that the Commission comply with the March 7 order within 30 days. With all due deference, the Commission is unable to provide the court with further explanation for the conclusions reached by the Commission majority in *Portable Electric Typewriters From Japan*, AA 1921–145, because only one of the three Commissioners composing the majority remains with the Commission.

The Commission is a decision-making body which must vote on a determination of injury or non-injury. Those Commissioners agreeing on a determination must together write the opinion expressing the reasons for reaching that determination. It would be impossible for the remaining member of the majority to provide an accurate response to the Court's request without the input of the two former Commissioners.

Again, I regret that circumstances are such that the Commission is unable to provide further explanation for the conclusions reached by the Commission majority in *Portable Electric Typewriters From Japan*, AA 1921–145.

IV

Chairman Alberger's letter, albeit courteous, nonetheless advances an untenable reason for the Commission's failure to comply with the Court's remand order.

As indicated *supra*, plaintiff's motion for summary judgment dated February 13, 1979 and the cross-motions by defendant and the party-in-interest were neither granted nor denied when, in C.R.D. 80–2, the Court remanded the case to the Commission. As in its previous motion for summary judgment, plaintiff now moves for a judgment holding that the Commission erred as a matter of law in making a negative injury determination, and further, for a judgment directing the appropriate administrative official to publish a finding of dumping covering PETs from Japan.

Specifically, plaintiff contends that the Commission erred as a matter of law "in not reaching an affirmative injury determination in view of the finding of significant market penetration, particularly when that penetration was accomplished primarily by underselling the domestic product via LTFV pricing, and when that penetration resulted in a loss of sales by the domestic industry." Plaintiff additionally argues that the Commission erred as a matter of law: by making the health of the domestic industry a relevant consideration; by finding there was no price suppression; and by not defining the relevant domestic industry as plaintiff's facilities devoted to producing portable manual typewriters or low-end portable electric typewriters.

V

Defendant's contention that this action is moot, as previously noted, was considered and rejected by Chief Judge Re in denying defendant's motion to dismiss on October 2, 1980. That ruling will now be adhered to as the law of the case, and accordingly defendant's cross-motion to dismiss is denied.

VI

The negative injury determination was rendered and a single Statement of Reasons written by (then) Chairman Leonard, (then) Commissioner Parker, and Commissioner Bedell. By March 7, 1980, date of the remand order, Commissioner Bedell was the only member of the majority remaining on the Commission. The Commission has now taken the position (through Chairman Alberger in his letter to me) that since Commissioner Bedell is the only one of the three Commissioners who constituted the majority and who is still a member of the Commission, the present Commission cannot provide a "more specific and explicit statement of reasons," as required by the remand order. However, as may be observed from plaintiff's contentions, the questions raised in the remand order of March 7, 1980, concerning the affected domestic industry and market penetration, are central to a determination of whether the Commission's negative determination was correct.

VII

I find that the reasons submitted by the Commission for its inability to comply with the Court's remand order of March 7, 1980 are legally invalid. The party-in-interest agrees with this conclusion. Indeed, it is of course not uncommon for the personnel constituting a court panel or an administrative tribunal to change periodically. Clearly, the Commission, like this Court, is a continuing institution, regardless of changes in its membership. To comply with the Court's remand order, the present Commissioners could have and should have familiarized themselves with the record before them. If after doing so, they remained unable to provide any reasons for the matters raised in the remand order or if they were of the view that the conclusions questioned were incorrect, the Commission should have so advised the Court.

Defendant's contention, that the remand order was impossible to carry out because it required an explanation by each of the individual Commissioners comprising the majority, is entirely without merit. The remand order plainly required an institutional response

(by the Commission) rather than responses by each of the individual Commissioners participating in the majority's determination.

The short of the matter is that the contested determination was an institutional decision, and as such, can be explained or corrected on remand by the Commission, notwithstanding that the membership of the Commission has changed since the time the determination was originally reached. Hence, Chairman Alberger's response on behalf of the Commission, although undoubtedly written in good faith, provided a legally insufficient reason for the Commission's inability to comply with the Court's remand order.

Accordingly, it is ordered that this proceeding be stayed for such necessary time as the Commission may require, not to exceed 90 days:

a. To supply this Court with a more specific and explicit Statement of Reasons in compliance with the remand order entered by the Court on March 7, 1980;

b. In addition to the questions raised by the previous remand order, the Commission is directed—within the time specified—to reconsider and advise this Court whether there was price suppression, after comparing the wholesale price indexes for portable typewriters and office (electric) typewriters; or to supply this Court with specific reasons why such basis for comparison is inappropriate;

c. Finally, the Commission shall make and report to this Court a specific finding of fact respecting whether there were lost sales as a consequence of market penetration by the Japanese LTFV imports.

It is further ordered that all of defendant's alternative cross-motions are denied.

International Trade Commission Notices

Investigations by the U.S. International Trade Commission

DEPARTMENT OF THE TREASURY, JULY 16, 1981

The appended notices relating to investigations by the U.S. International Trade Commission are published for the information of Customs officers and others concerned.

WILLIAM T. ARCHEY,
Acting Commissioner of Customs.

In the Matter of
CERTAIN AIRLESS PAINT SPRAY PUMPS AND COMPONENTS THEREOF } Investigation No. 337-TA-90

Notice of Request for Additional Information

AGENCY: U.S. International Trade Commission.

ACTION: Commission request that parties provide information regarding interested nonparties.

SUMMARY: The Commission has ordered the parties to this investigation to submit a list containing the names and addresses of companies and/or persons not parties to this investigation who may have relevant information to present to the Commission concerning the issues of violation, public interest, and remedy, particularly those nonparties which may be on the verge of involvement in the importation of pumps alleged to infringe the patents in issue in this investigation.

AUTHORITY: The authority for the Commission's action is contained in subsection 337(b) of the Tariff Act of 1930 (19 U.S.C. § 1336(b)).

FOR FURTHER INFORMATION CONTACT: Scott Daniels, Esq., Office of the General Counsel, U.S. International Trade Commission, telephone 202–523–0480.

By order of the Commission.

Issued: July 1, 1981.

KENNETH R. MASON,
Secretary.

731–TA–45, 46, and 47 (Preliminary)

CERTAIN STEEL WIRE NAILS FROM JAPAN, THE REPUBLIC OF KOREA, AND YUGOSLAVIA

Notice of Institution of Preliminary Antidumping Investigations and Scheduling of Conference

AGENCY: United States International Trade Commission.

ACTION: Institution of preliminary antidumping investigations.

SUMMARY: The U.S. International Trade Commission hereby gives notice of the institution of preliminary antidumping investigations to determine whether there is a reasonable indication that an industry in the United States is materially injured, or is threatened with material injury, or the establishment of an industry in the United States is materially retarded, by reason of imports from Japan, the Republic of Korea, and Yugoslavia of steel wire nails, provided for in items 646.25 and 646.26 of the Tariff Schedules of the United States, possibly sold at less than fair value.

EFFECTIVE DATE: July 2, 1981.

FOR FURTHER INFORMATION CONTACT: Mr. Lynn Featherstone, Supervisory Investigator, telephone (202–523–0242), U.S. International Trade Commission, Room 346, 701 E Street, NW., Washington, D.C. 20436.

SUPPLEMENTARY INFORMATION:

BACKGROUND

On July 2, 1981, the Department of Commerce (hereinafter "Commerce") advised the Commission that Commerce was initiating antidumping investigations of steel wire nails from Japan, the Republic of Korea, and Yugoslavia pursuant to section 732(a) of the Tariff Act of 1930, (19 U.S.C. Section 1673a(a) (Supp. III 1979)). After monitoring imports of certain steel products under the Trigger

Price Mechanism, Commerce found significant sales of steel wire nails being made at less than the relevant trigger price. The sales constitute possible sales at less than fair value.

Accordingly, on July 2, 1981, the Commission, pursuant to section 733(a) of the Tariff Act of 1930, (19 U.S.C. Section 1673b(a) (Supp. III 1979)), instituted preliminary antidumping investigations Nos. 731–TA–45, 46, and 47 (Preliminary).

Section 733(a) of the Tariff Act of 1930 requires the Commission to make a determination of whether there is a reasonable indication that an industry in the United States is materially injured, or is threatened with material injury, or the establishment of an industry in the United States is materially retarded, by reason of imports possibly sold in the United States at less than fair value. Such a determination must be made within 45 days after the date on which notice of an investigation commenced under section 732(a) is received from the Department of Commerce. These investigations will be subject to the provisions of the Commission's Rules of Practice and Procedure (19 CFR Section 201.00, *et seq.*) and, particularly, to part 207 thereof (19 CFR Section 207.1, *et seq.*).

WRITTEN SUBMISSIONS

Any person may submit to the Commission on or before July 30, 1981, a written statement of information pertinent to the subject matter of these investigations. A signed original and nineteen copies of such statements must be submitted.

Any business information which a submitter desires the Commission to treat as confidential shall be submitted separately and each sheet must be clearly marked at the top "Confidential Business Data." Confidential submissions must conform with requirements of section 201.6 of the Commission's Rules of Practice and Procedure (19 CFR Section 201.6). All written submissions, except for confidential business data, will be available for public inspection.

CONFERENCE

The Director of Operations of the Commission has scheduled a conference in connection with the investigations for 10 a.m., e.d.t., on July 23, 1981, at the U.S. International Trade Commission Building, 701 E Street NW., Washington, D.C. Persons wishing to participate in the conference should contact the supervisory investigator for the investigations, Mr. Lynn Featherstone (202–523–0242) by the close of business (5:15 p.m., e.d.t.), July 22, 1981. It is anticipated that persons in support of the imposition of antidumping duties and persons opposed to such duties will each be collectively

allocated 1 hour within which to make an oral presentation at the conference. Further details concerning the conduct of the conference will be provided by the supervisory investigator.

Issued: July 2, 1981.

KENNETH R. MASON,
Secretary.

In the matter of
CERTAIN APPARATUS FOR THE CONTINUOUS PRODUCTION OF COPPER ROD } Investigation No. 337–TA–89

Notice of Approval of Settlement Agreements

ACTION: Approval of settlement agreements.

SUMMARY: Notice is hereby given that the U.S. International Trade Commission has approved the settlement agreements entered into by Southwire Company and Fried. Krupp GmbH and Krupp International, Inc. on April 10, 1981.

SUPPLEMENTARY INFORMATION: As a result of a complaint filed by Southwire Company on July 29, 1980, and amended on August 1, 1980, and August 5, 1980, under section 337 of the Tariff Act of 1930 (19 U.S.C. 1337) the Commission instituted an investigation to determine whether section 337 is being violated by reason of infringement of U.S. Letters Patent 4,129,170. A notice of investigation was published in the Federal Register on August 13, 1980 (45 F.R. 53923).

On April 21, 1981, Krupp G.m.b.H., Krupp International Inc., Southwire Co., and the Commission investigative attorney filed a joint motion for an order approving the settlement agreements entered into by Southwire and Krupp on April 10, 1981. The Commission sought comments on the proposed settlement agreements through notice published in the Federal Register on May 15, 1981 (46 F.R. 26943). No comments were received in response to that notice. On July 2, 1981, the Commission approved the settlement agreements.

Copies of the Commission's Action and Order and all non-confidential documents in the record of this investigation are available for inspection during official business hours (8:45 a.m. to 5:15 p.m.) in the Office of the Secretary, U.S. International Trade Commission, 701 E Street NW., Washington, D.C. 20436, telephone 202–523–0161.

FOR FURTHER INFORMATION CONTACT: Jeffrey S. Neeley, Esq., Office of the General Counsel, U.S. International Trade Com-

mission, 701 E Street NW., Washington, D.C. 20436, telephone (202) 523–0359.

By order of the Commission.

Issued: July 6, 1981.

KENNETH R. MASON,
Secretary.

In the Matter of CERTAIN ULTRAFILTRATION MEMBRANE SYSTEMS AND COMPONENTS THEREOF, INCLUDING ULTRAFILTRATION MEMBRANES	Investigation No. 337–TA–107

Notice of Investigation

AGENCY: U.S. International Trade Commission.

ACTION: Institution of investigation pursuant to 19 U.S.C. 1337.

SUMMARY: Notice is hereby given that a complaint was filed with the U.S. International Trade Commission on May 19, 1981, and was amended on June 10, 1981, and July 1, 1981, under section 337 of the Tariff Act 1930 (19 U.S.C. 1337), on behalf of Amicon Corporation at 25 Hartwell Avenue, Lexington, Mass. 02173, Romicon, Inc. and Comex, Inc., both at 100 Cummings Park, Woburn, Mass. 01801. The amended complaint (hereinafter the complaint) alleges unfair methods of competition and unfair acts in the importation of certain ultrafiltration membrane systems and components thereof including ultrafiltration membranes, into the United States, or in their sale, by reason of the alleged infringement by said ultrafiltration membranes of claims 1, 2, 3, 5, and 6 of U.S. Letters Patent 3,615,024, and by reason of the alleged contributory and induced infringement by said ultrafiltration membrane systems and components thereof, including ultrafiltration membranes, of claims 1, 2, 3, 5, 6, 7, and 8 of U.S. Letters Patent 3,526,588, and all of the claims of U.S. Letters Patent 3,541,005. The complaint further alleges that the effect or tendency of the unfair methods of competition and unfair acts is to destroy or substantially injure an industry efficiently and economically operated, in the United States.

The complainants request that, during the pendency of the investigation, the Commission issue both a temporary exclusion order, prohibiting importation of said articles into the United States except under bond and a temporary cease and desist order, and,

after a full investigation, issue both an exclusion order, prohibiting importation of said articles into the United States for the lives of the patents in issue, and a cease and desist order.

AUTHORITY: The authority for institution of this investigation is contained in section 337 of the Tariff Act of 1930 and in section 210.12 of the Commission's Rules of Practice and Procedure.

SCOPE OF THE INVESTIGATION: Having considered the complaint, the U.S. International Trade Commission, on July 2, 1981, ordered that—

(1) Pursuant to subsection (b) of section 337 of the Tariff Act of 1930, an investigation be instituted to determine whether there is reason to believe that there is a violation and whether there is a violation of subsection (a) of section 337 in the unlawful importation of certain ultrafiltration membrane systems and components thereof, including ultrafiltration membranes, into the United States, or in their sale, by reason of the alleged infringement by said ultrafiltration membranes of claims 1, 2, 3, 5, or 6 of U.S. Letters Patent 3,615,024, or by reason of the alleged contributory and induced infringement by said ultrafiltration membrane systems and components thereof, including ultrafiltration membranes, of claims 1, 2, 3, 5, 6, 7, or 8 of U.S. Letters Patent 3,526,588, or any one or all of the claims of U.S. Letters Patent 3,541,005, the effect or tendency of which is to destroy or substantially injure an industry, efficiently and economically operated, in the United States.

(2) For the purpose of this investigation so instituted, the following are hereby named as parties upon which this notice of investigation shall be served:

(a) The complainants are—

Romicon, Inc.
100 Cummings Park
Woburn, Mass. 01801

Comex, Inc.
100 Cummings Park
Woburn, Mass. 01801

Amicon Corp.
25 Hartwell Avenue
Lexington, Mass. 02173

(b) The respondents are the following companies, alleged to be in violation of section 337, and are the parties upon which the complaint is to be served:

Aktieselskabet De Danske Sukkerfabrikker (DDS)
Postboks 119
DK–4900 Nakskov, Denmark

Niro Atomizer, Inc.
9165 Rumsey Rd.
Columbia, Md. 21045

General Dairy Equipment
434 Stinson Boulevard
Minneapolis, Minn. 55413

(c) Robert S. Budoff, Unfair Import Investigations Division, U.S. International Trade Commission, 701 E Street NW., Washington, D.C. 20436, shall be the Commission investigative attorney, a party to this investigation; and

(3) For the investigation so instituted, Donald K. Duvall, Chief Administrative Law Judge, U.S. International Trade Commission, 701 E Street NW., Washington, D.C. 20436, shall designate the presiding officer.

Responses must be submitted by the named respondents in accordance with section 210.21 of the Commission's Rules of Practice and Procedure (19 CFR 210.21). Pursuant to sections 201.16(d) and 210.21(b) of the rules, such responses will be considered by the Commission if received not later than 20 days after the date of service of the complaint. Extensions of time for submitting a response will not be granted unless good and sufficient cause therefor is shown.

Failure of a respondent to file a timely response to each allegation in the complaint and in this notice may be deemed to constitute a waiver of the right to appear and contest the allegations of the complaint and this notice, and to authorize the presiding officer and the Commission, without further notice to the respondent, to find the facts to be as alleged in the complaint and this notice and to enter both a recommended determination and a final determination containing such findings.

The complaint, except for any confidential information contained therein, is available for inspection during official working hours (8:45 a.m. to 5:15 p.m.) in the Office of the Secretary, U.S. International Trade Commission, 701 E Street NW., Washington, D.C. 20436, telephone 202–523–0161.

FOR FURTHER INFORMATION CONTACT: Robert S. Budoff, Unfair Import Investigations Division, U.S. International Trade Commission, telephone 202–523–0113.

By order of the Commission.

Issued: July 6, 1981.

KENNETH R. MASON,
Secretary

In the Matter of CERTAIN HIGH-VOLTAGE CIRCUIT INTERRUPTERS AND COMPONENTS THEREOF	Investigation No. 337-TA-64

AGENCY: U.S. International Trade Commission.

ACTION: Termination of investigation.

AUTHORITY: 19 U.S.C. 1337; 19 CFR 210.51.

SUPPLEMENTARY INFORMATION: On April 22, 1981, Westinghouse Electric Corp. (Westinghouse), complainant in this investigation, filed a motion to terminate the investigation. The investigation has been suspended since October 4, 1979, pending the outcome of a reissue proceeding in the Patent and Trademark Office (PTO) involving U.S. Letters Patent 3,291,947 (the '947 patent), the patent which is the subject of the investigation. The reissue application was rejected by the PTO because it found the claims of the patent invalid after examining newly discovered prior art. That decision was affirmed by the U.S. Court of Customs and Patent Appeals.

Westinghouse now intends to file a continuation application of the rejected reissue application. Westinghouse filed the motion to terminate because the '947 patent is scheduled to expire on December 13, 1983. Westinghouse claims that so much of the time remaining before the expiration of the '947 patent will be taken by the continuation application process and completion of the Commission investigation that any relief granted by the Commission will be rendered ineffective.

The parties responding to Westinghouse's motion to terminate have indicated agreement with termination of the investigation with prejudice, as has Westinghouse. Since the investigation has been suspended since October 4, 1981, this motion was not considered by the administrative law judge and, therefore, no recommended determination has been filed.

On July 6, 1981, the Commission voted to terminate investigation No. 337-TA-64 with prejudice. Termination of the investigation was based on the motion of the complainant and concurrence of other parties to the investigation.

Any party wishing to petition for reconsideration of the Commission's action must do so within fourteen (14) days of service of the Commission order. Such petitions must be in accord with Commission rule 210.56 (19 CFR § 210.56).

Copies of the Commission's action and order and all other nonconfidential documents filed in connection with this investigation are available for inspection during official business hours (8:45 a.m.

to 5:15 p.m.) in the Office of the Secretary, U.S. International Trade Commission, 701 E Street NW., Washington, D.C. 20436, telephone 202–523–0161.

FOR FURTHER INFORMATION CONTACT: Carol McCue Verratti, Esq., Office of the General Counsel, U.S. International Trade Commission, 701 E Street NW., Washington, D.C. 20436, telephone 202–523–1641.

By order of the Commission.

Issued: July 7, 1981.

KENNETH R. MASON,
Secretary.

In the Matter of CERTAIN WET MOTOR CIRCULATING PUMPS AND COMPONENTS THEREOF	Investigation No. 337–TA–94

Notice of Grant of Leave To Review Orders Nos. 13 and 15 and of Affirmance of Orders Nos. 13 and 15

AGENCY: U.S. International Trade Commission.

ACTION: Grant of application for review of Orders No. 13 and 15 and affirmance of Orders No. 13 and 15.

SUMMARY: Notice is hereby given that on the basis of an application for review of Orders No. 13 and 15 filed by parties respondent Grundfos A.S. and Grundfos Pumps Corp. (Motion 94–22) the Commission has granted the application for review and affirmed the presiding officer's denial of Motion No. 94–9 but for reasons different than those given in Orders No. 13 and 15.

AUTHORITY: The authority for the Commission's action is contained in section 337 of the Tariff Act of 1930 (19 U.S.C. § 1337) and in section 210.60(b) (19 CFR § 210.60(b)) of the Commission's *Rules of Practice and Procedure.*

SUPPLEMENTARY INFORMATION: Upon receipt of a complaint filed by Taco, Inc., the Commission instituted investigation No. 337–TA–94 on December 31, 1980, to determine whether there is a violation of section 337 of the Tariff Act of 1930 by reason of importation into and sale in the United States of certain wet motor circulating pumps and components thereof. Complainant Taco alleges that the accused wet motor circulating pumps infringe claims 1, 2, 3, 6, 8, 15, 19, and 20 of U.S. Letters Patent 3,264,653 and that

respondents have misappropriated Taco's trade secrets. Notice of the Commission's investigation was published in the Federal Register on December 31, 1980, 45 F.R. 86564.

Respondents Grundfos A.S. and Grundfos Pumps Corp. moved on April 17, 1981, for a protective order to limit discovery on individuals who are directors, officers or employees of respondent companies to knowledge they have gained or possess as directors, officers or employees of the named respondent companies and not from any other company which they might serve. The presiding officer denied the motion (Orders No. 13 and 15), but granted respondent's leave to file an interlocutory appeal with the Commission.

FOR FURTHER INFORMATION CONTACT: William E. Perry, Esq., Office of the General Counsel, U.S. International Trade Commission, telephone 202–523–1693.

By order of the Commission.

Issued: July 8, 1981.

KENNETH R. MASON,
Secretary.

Investigation No. 104–TAA–4

STEEL UNITS FOR ELECTRICAL TRANSMISSION TOWERS FROM ITALY

AGENCY: United States International Trade Commission.

ACTION: Institution of a countervailing duty investigation.

SUMMARY: On April 21, 1967, the U.S. Department of the Treasury (Treasury) published in the Federal Register (32 F.R. 6274) a notice of final countervailing duty determination and suspension of liquidation of duties stating that it had determined that exports from Italy of galvanized fabricated structural steel units for the erection of electrical transmission towers benefited from bounties or grants within the meaning of section 303 of the Tariff Act of 1930. Accordingly, imports into the United States of such merchandise from Italy were subject to countervailing duties.

On January 1, 1980, the provisions of the Trade Agreements Act of 1979 became effective, and on January 2, 1980, the authority for administering the countervailing duty statute was transferred from Treasury to the U.S. Department of Commerce (Commerce). On May 13, 1980, Commerce published a notice in the Federal Register (44 F.R. 31455) of intent to conduct an annual administrative review of all outstanding countervailing duty orders.

On March 27, 1980, the U.S. International Trade Commission received a request from counsel for Societa Anonima Electtrificazione S.p.A, Milano, Italy, for an investigation under section 104(b)(1) of the Trade Agreements Act of 1979 with respect to steel units for electrical transmission towers from Italy. A request for such an investigation was also received from the Delegation of the Commission of the European Communities on March 28, 1980. In accordance with section 104(b)(3) of the act, the Commission notified the Department of Commerce of its receipt of a request for an investigation.

As required by section 751(a)(1) of the Tariff Act of 1930, Commerce has conducted its first annual administrative review of the countervailing duty order on U.S. imports from Italy of galvanized fabricated structural steel units for the erection of electrical transmission towers. As a result, Commerce, in the Federal Register of April 28, 1981 (46 F.R. 23782), preliminarily determined that the net subsidy conferred on such merchandise is 18 lire per kilogram. On the basis of that determination, the United States International Trade Commission, pursuant to section 104(b)(2) of the Trade Agreements Act of 1979, is instituting an investigation to determine whether an industry in the United States would be materially injured, would be threatened with material injury, or the establishment of an industry in the United States would be materially retarded, by reason of imports from Italy of the merchandise covered by the countervailing duty order if the order were to be revoked. Galvanized fabricated structural steel units for the erection of electrical transmission towers are currently provided for under Tariff Schedules of the United States (TSUS) items 653.00, if imported complete or substantially complete; 652.94, if made up into a series of sections; or other items including but not necessarily limited to 609.84, 646.54, 646.65, 646.70, 646.72, 657.25 and 923.51, if imported as individual pieces.

Commerce reported that it would issue a final determination in this case after analysis of issues received in written comments or at a hearing. However, no hearing was requested and no written comments had been received by the deadline for their submission to Commerce, May 28, 1981. Commerce's final determination as to the most current level of subsidies will be made as soon as possible.

EFFECTIVE DATE: July 6, 1981.

FOR FURTHER INFORMATION CONTACT: Quay Williams, Office of Industries, (202–523–0341), Howard Gooley, Office of Economics, (202–523–1175), or Robert Eninger, Office of Investigations, (202–523–0312).

SUPPLEMENTARY INFORMATION:

PUBLIC HEARING

The Commission will hold a public hearing in connection with this investigation on October 7, 1981, in the Hearing Room of the U.S. International Trade Commission Building, beginning at 10 a.m., e.d.t. Requests to appear at the hearing should be filed in writing with the Secretary to the Commission not later than the close of business (5:15 p.m., e.d.t.) on October 2, 1981. All persons desiring to appear at the hearing and make oral presentations must file prehearing statements and should attend a prehearing conference to be held at 10 a.m., e.d.t., on September 30, 1981, in Room 117 of the U.S. International Trade Commission Building. Prehearing statements must be filed on or before September 30, 1981.

Testimony at the public hearing is governed by section 207.23 of the Commission's Rules of Practice and Procedure (19 CFR 207.23). This rule requires that testimony be limited to a nonconfidential summary and analysis of material contained in prehearing statements and to new information. The Commission will not receive prepared testimony for the public hearing, as would otherwise be provided for by rule 201.12(d). All legal arguments, economic analyses, and factual materials relevant to the public hearing should be included in prehearing statements in accordance with rule 207.22. Posthearing briefs will also be accepted within a time specified at the hearing.

WRITTEN SUBMISSIONS

Any person may submit to the Commission on or before September 30, 1981, a written statement of information pertinent to the subject matter of this investigation. A signed original and nineteen true copies of such statements must be submitted in accordance with section 201.8 of the Commission's Rules of Practice and Procedure, 19 CFR section 201.8 (1980). All written submissions, except confidential business data, will be available for public inspection.

Any business information which a submitter desires the Commission to treat as confidential shall be submitted separately and each sheet must be clearly marked at the top "Confidential business data". Confidential submissions must conform with the requirements of section 201.6 of the Rules of Practice and Procedure (19 CFR 201.6).

For further information concerning the conduct of the investigation, hearing procedures, and rules of general application, consult the Commission's Rules of Practice and Procedure, part 207, subparts A and C (19 CFR 207), and part 201, subparts A through E (19 CFR 201).

This notice is published pursuant to section 207.20 of the Commission's Rules of Practice and Procedure (19 CFR 207.20, 44 F.R. 76458).

By order of the Commission.

Issued: July 10, 1981.

KENNETH R. MASON,
Secretary.

Investigation No. TA-203-11

BOLTS, NUTS, AND LARGE SCREWS OF IRON OR STEEL

Notice of Investigation and Hearing

AGENCY: United States International Trade Commission.

ACTION: Upon its own motion and on the basis of a petition filed on June 30, 1981, on behalf of the United States Fastener Manufacturing Group, the United Steel Workers of America, the International Association of Machinists and Aerospace Workers, the United Automobile, Aerospace and Agricultural Implement Workers of America, and the Industrial Union Department of the AFL-CIO, the Commission on July 9, 1981, instituted investigation No. TA-203-11 under sections 203(i)(2) and 203(i)(3) of the Trade Act of 1974 (19 U.S.C. 2253(i)(2) and (i)(3)) for the purpose of gathering information in order that it might advise the President of its judgment as to the probable economic effect on the industry concerned of the extension, reduction, or termination of import relief presently in effect with respect to lag screws or bolts, bolts (except mine-roof bolts) and bolts and their nuts imported in the same shipment, nuts, and screws having shanks or threads over 0.24 inch in diameter, all the foregoing of iron or steel, provided for in items 646.49, 646.54, 646.56, and 646.63 of the Tariff Schedules of the United States (TSUS). Relief in the form of temporary duty increases described in items 923.50, 923.51, 923.52, and 923.53 of the Appendix to the TSUS is provided for in Presidential Proclamation 4632 (issued January 4, 1979, 44 F.R. 1697). Import relief presently in effect with respect to such merchandise is scheduled to terminate at the close of business on January 5, 1982, unless extended by the President.

EFFECTIVE DATE: July 9, 1981.

FOR FURTHER INFORMATION CONTACT: David Coombs, Investigator, telephone 202-523-1376, U.S. International Trade Commission, Room 344, 701 E Street, NW., Washington, D.C. 20436.

SUPPLEMENTARY INFORMATION:

PUBLIC HEARING ORDERED

A public hearing in connection with this investigation will be held in Washington, D.C., at 10 a.m., e.d.t., on Thursday, September 10, 1981, in the Hearing Room, U.S. International Trade Commission Building, 701 E Street, NW. Requests for appearances at the hearing should be received in writing by the Secretary to the Commission at his office in Washington no later than the close of business on Friday, August 21, 1981.

PREHEARING PROCEDURE

To facilitate the hearing process, it is requested that persons wishing to appear at the hearing submit prehearing briefs enumerating and discussing the issues which they wish to raise at the hearing. Nineteen copies of such prehearing briefs should be submitted to the Secretary to the Commission no later than the close of business on Wednesday, September 2, 1981. Copies of prehearing briefs submitted will be made available for public inspection in the Office of the Secretary. While submission of prehearing briefs does not prohibit submission of prepared statements in accordance with section 201.12(d) of the Commission's Rules of Practice and Procedure (19 CFR 201.12(d)), it would be unnecessary to submit such a statement if a prehearing brief is submitted instead. Oral presentations should, to the extent possible, be limited to issues raised in the prehearing briefs.

A prehearing conference will be held on Tuesday, August 25, 1981, at 10:00 a.m., e.d.t., in Room 117 of the U.S. International Trade Commission Building.

Persons not represented by counsel or public officials who have relevant matters to present may give testimony without regard to the suggested prehearing procedures outlined above.

INSPECTION OF PETITION

The petition filed in this case is available for public inspection at the Office of the Secretary, U.S. International Trade Commission.

By order of the Commission.

Issued: July 10, 1981.

KENNETH R. MASON,
Secretary.

Index

U.S. Customs Service

Treasury Decisions:

	T.D. No.
Bonds:	
Aircraft; CF 7605	81-186
Carriers; CF 3587	81-184
Foreign Currencies:	
Variances from quarterly rates; June 22-26, 1981	81-187
New Seal Standards; CR amended, parts 18-24	81-185

DEPARTMENT OF THE TREASURY
U.S. CUSTOMS SERVICE
WASHINGTON, D.C. 20229

OFFICIAL BUSINESS
PENALTY FOR PRIVATE USE, $300

POSTAGE AND FEES PAID
DEPARTMENT OF THE TREASURY (CUSTOMS)
(TREAS. 552)

U.S.MAIL

U.S. GOVERNMENT PRINTING OFFICE : 1981

15/31

Customs Bulletin

Regulations, Rulings, Decisions, and Notices concerning Customs and related matters

and Decisions

of the United States Court of Customs and Patent Appeals and the United States Court of International Trade

Vol. 15 AUGUST 5, 1981 No. 31

This issue contains

T.D. 81-188 Through 81-199
C.S.D. 81-161 Through 81-170
C.A.D. 1267
Slip. Op. 81-58 Through 81-63
Protest Abstracts P81/107 Through P81/112
Reap. Abstracts R81/246 Through R81/265
International Trade Commission Notices

NEWARK PUBLIC LIBRARY

AUG 20 1981

U. S. GOVT. PUBS.
DEPOSITORY 376

THE DEPARTMENT OF THE TREASURY
U.S. Customs Service

T 1.11/3:

NOTICE

The abstracts, rulings, and notices which are issued weekly by the U.S. Customs Service are subject to correction for typographical or other printing errors. Users may notify the U.S. Customs Service, Logistics Management Division, Washington, D.C. 20229, of any such errors in order that corrections may be made before the bound volumes are published.

NEWARK PUBLIC LIBRARY
AUG 20 1981
U. S. GOVT. PUBS.
DEPOSITORY 378

For sale by the Superintendent of Documents, U.S. Government Printing Office, Washington, D.C. 20402. Price: $2.25 (single copy domestic); $2.85 (single copy foreign). Subscription price: $85.00 a year domestic; $106.25 a year foreign.

U.S. Customs Service

Treasury Decisions

(T.D. 81-188)

Customs Approved Public Gauger

Approval of public gauger performing gauging under standards and procedures required by Customs

Notice is hereby given pursuant to the provisions of section 151.43 of the Customs Regulations (19 CFR 151.43) that the application of National Maritime Surveys, Inc., 8935 Jefferson, River Ridge, Louisiana 70123, to gauge imported petroleum and petroleum products in all Customs districts in accordance with the provisions of section 151.43 of the Customs Regulations is approved.

Dated: July 15, 1981.

Anthony L. Piazza, for
SALVATORE E. CARAMAGNO
Director, Entry Procedures
and Penalties Division).

[Published in the Federal Register July 21, 1981 (46 F.R. 37587)]

19 CFR Part 151

(T.D. 81-189)

Examination of Cigars, Cigarillos, and Tobacco of Cuban Origin

AGENCY: U.S. Customs Service, Department of the Treasury.

ACTION: Final rule.

SUMMARY: This rule amends the Customs Regulations to centralize responsibility for the general supervision of the examination of all imported tobacco which may be of Cuban origin, in the tobacco National Import Specialist at the port of New York.

Previously, tobacco suspected to be of Cuban origin was examined by import specialists at the ports of New York and Tampa.

Customs has determined that to improve the efficiency of service to the public and to utilize fully its personnel resources, centralization of that examination function is necessary.

EFFECTIVE DATE: August 24, 1981.

FOR FURTHER INFORMATION CONTACT: George Pinto, Duty Assessment Division, U.S. Customs Service, 1301 Constitution Avenue NW., Washington, D.C. 20229 (202–566–2957).

SUPPLEMENTARY INFORMATION:

BACKGROUND

The Cuban Assets Control Regulations issued by the Office of Foreign Assets Control, Department of the Treasury (31 CFR 515.201–515.801), prohibit the unlicensed importation of all goods of Cuban origin, all goods imported from or through Cuba, and also the unlicensed importation of merchandise derived in whole or in part of any article which is the growth, produce, or manufacture of Cuba.

Accordingly, in the early 1960's, Customs developed and issued regulations (present section 151.111, Customs Regulations (19 CFR 151.111)), and operational guidelines designed to prevent the unlicensed importation of cigars, cigarillos, and tobacco, which may be made or derived in whole or in part of Cuban articles, or which may be of Cuban origin.

From the inception of Customs program to implement the provisions of the Cuban Assets Control Regulations, general supervision of the examination of all *cigars* or *cigarillos* suspected of being Cuban articles has been the responsibility of the tobacco import specialist at the port of New York, regardless of the actual U.S. port of importation (section 151.111(a)).

However, section 151.111(b) divided the responsibility for the general supervision of the examination of *tobacco* suspected to be of Cuban origin between the tobacco import specialist at New York and the tobacco import specialist at Tampa, Florida. Supervision of imports of such tobacco occurring in Customs Regions I (Boston), II (New York), III (Baltimore), and IX (Chicago) was assigned to New York, while Tampa supervised examination of such tobacco imported in Regions IV (Miami), V (New Orleans), VI (Houston), VII (Los Angeles), and VIII (San Francisco).

That system of dividing operational responsibility for a commodity between two import specialists is unique in Customs. Headquarters and Regional surveys have uniformly agreed that the present procedures relative to those tobacco importations are contrary to good management principles and do not result in optimum utilization of available import specialist resources. As a result, it has been decided to amend section 151.111 as set forth below to centralize responsibility for examination of tobacco which may be of Cuban origin in the tobacco National Import Specialist at the port of New York. The

Tampa position will be used for normal import specialist functional responsibilities within the Tampa Customs District alone.

NOTICE OF PROPOSED RULEMAKING UNNECESSARY

Because this minor amendment involves a matter relating solely to agency personnel management, pursuant to 5 U.S.C. 553(a)(2), notice and public procedure thereon are unnecessary.

EXECUTIVE ORDER 12291 AND REGULATORY FLEXIBILITY ACT

It has been determined that the amendment is not a "major rule" within the criteria provided in section 1(b) of E.O. 12291, and therefore no regulatory impact analysis has been prepared.

In addition, it has been determined that the amendment is not subject to the provisions of Pub. L. 96–354, the Regulatory Flexibility Act (5 U.S.C. 601–612), because publication of a notice of proposed rulemaking is not required by the Administrative Procedure Act (5 U.S.C. 551 *et seq.*), or any other law.

DRAFTING INFORMATION

The principal author of this document was Todd J. Schneider, Regulations and Information Division, Office of Regulations and Rulings, U.S. Customs Service. However, other Customs personnel participated in its development.

AMENDMENT TO THE REGULATIONS

Part 151, Subpart I, Customs Regulations (19 CFR Part 151, Subpart I), is amended by revising section 151.111 to read as follows:

§151.111 CIGARS, CIGARILLOS, AND TOBACCO OF CUBAN ORIGIN.

The tobacco National Import Specialist at the port of New York shall have general supervision of the examination of (1) all cigars or cigarillos which may be made or derived in whole or in part of Cuban articles, and (2) all tobacco which may be of Cuban origin.

(R.S. 251, as amended, sections 499, 624, 46 Stat. 728, as amended, 759 (19 U.S.C. 66, 1499, 1624))

WILLIAM T. ARCHEY,
Acting Commissioner of Customs.

Approved: July 9, 1981.

ROBERT E. POWIS,
Acting Assistant Secretary of the Treasury.

[Published in the Federal Register July 23, 1981 (46 F.R. 37888)]

(T.D. 81-190)

Synopses of Drawback Decisions

The following are synopses of drawback rates issued April 21, 1981, to June 2, 1981, inclusive, pursuant to sections 22.1 through 22.5, inclusive, Customs Regulations.

In the synopses below are listed for each drawback rate approved under 19 U.S.C. 1313(b), the name of the company, the specified articles on which drawback is authorized, the merchandise which will be used to manufacture or produce these articles, the factories where the work will be accomplished, the date the statement was signed, the basis for determining payment, the Regional Commissioner to whom the rate was forwarded or issued by, and the date on which it was forwarded or issued.

Dated: July 14, 1981

File: 213242
DRA-1-09

MARILYN G. MORRISON,
Director,
Carriers, Drawback and Bonds Division.

(A) Company: American Orange Corp.
Articles: Frozen concentrated orange juice and bulk concentrated orange juice
Merchandise: Concentrated orange juice for manufacturing
Factory: Wauchula, FL
Statement signed: March 3, 1981
Basis of claim: Used in
Rate forwarded to Regional Commissioner of Customs: Miami, April 28, 1981

(B) Company: Atlas Crankshaft Corp.
Articles: Finished machined crankshafts, camshafts and gears
Merchandise: Rough crankshaft, camshaft and gear forgings
Factory: Fostoria, OH
Statement signed: March 30, 1981
Basis of claim: Used in, less valuable waste
Rate forwarded to Regional Commissioner of Customs: Chicago, April 30, 1981

(C) Company: Banner Spring & 4-Slide Co.
Articles: Jack bolts
Merchandise: Steel wire
Factory: Taylor, MI

Statement signed: January 26, 1981
Basis of claim: Appearing in
Rate forwarded to Regional Commissioner of Customs: New York, May 11, 1981

(D) Company: City Auto Stamping Div., Sheller-Globe Corp.
Articles: Automotive, truck, and other miscellaneous parts
Merchandise: Hot rolled steel sheet, strip, and blanks; cold rolled steel sheet, strip, and blanks; galvanized steel sheet, strip, and blanks; zincrometal steel sheet, strip, and blanks
Factory: Toledo, OH
Statement signed: January 23, 1981
Basis of claim: Appearing in
Rate forwarded to Regional Commissioner of Customs: New York, May 13, 1981

(E) Company: Command-Aire Corp.
Articles: Air conditioners
Merchandise: Steel sheet metal
Factory: Waco, TX
Statement signed: December 4, 1980
Basis of claim: Appearing in
Rate forwarded to Regional Commissioner of Customs: New York, May 6, 1981

(F) Company: Eastman Kodak Co.
Articles: Triacetin (Estrobond B)
Merchandise: Refined synthetic glycerine (imported); Refined synthetic and natural glycerine (domestic)
Factory: Kingsport, TN
Statement signed: March 4, 1981
Basis of claim: Appearing in
Rate forwarded to Regional Commissioner of Customs: Baltimore, April 30, 1981

(G) Company: Eastman Kodak Co.
Articles: Hexadecylsulfonyl chloride; PM4581 (coupler intermediate)
Merchandise: CETYL bromide (1–bromohexadecane); thionyl chloride
Factories: Kingsport, TN; Batesville, AR
Statement signed: May 8, 1981
Basis of claim: Used in
Rate forwarded to Regional Commissioner of Customs: Baltimore, May 22, 1981

(H) Company: Fiat-Allis Construction Machinery, Inc.
Articles: Construction machinery and parts thereof
Merchandise: Steel, hot rolled carbon plate (structural quality); steel, hot rolled grouser/track shoe sections; steel, hot rolled carbon plates (severe forming); steel, hot rolled, high strength low alloy plate (structural quality); steel, hot rolled quenched and tempered low carbon plates (structural quality); steel, hot rolled quenched and tempered abrasion resistant plates (regular quality)
Factories: Deerfield and Springfield, IL
Statement signed: March 18, 1981
Basis of claim: Appearing in
Rate forwarded to Regional Commissioner of Customs: Chicago, May 7, 1981
Revokes: T.D. 80–245–G.

(I) Company: Globe Battery Division, Johnson Controls, Inc.
Articles: Lead storage batteries
Merchandise: Corroding lead; litharge
Factories: Various factories as listed in manufacturer's statement
Statement signed: April 14, 1981
Basis of claim: Appearing in
Rate issued by Regional Commissioner of Customs in accordance with section 22.4(o)(2): Chicago, April 22, 1981
Revokes: T.D. 79–63–L, to cover successorship from Globe-Union, Inc., and to cover additional factory

(J) Company: Gottschalk Metal Sponge Sales Corp.
Articles: Scouring pads of various sizes
Merchandise: Stainless steel, nickel, silver, and brass wire drawn to various diameters
Factory: Philadelphia, PA
Statement signed: April 16, 1981
Basis of claim: Used in
Rate forwarded to Regional Commissioner of Customs: Baltimore, June 2, 1981

(K) Company: Gulf Oil Corp.
Articles: Polyethylene and alpha olefins
Merchandise: Ethylene and butylated hydroxy ethyl benzene (BHEB)
Factories: Baytown and Orange, TX
Statement signed: March 11, 1981
Basis of claim: Used in
Rate forwarded to Regional Commissioner of Customs: Houston, May 4, 1981
Revokes: T.D. 69–111–Q and T.D. 73–124–L

(L) Company: Harley Davidson Motor Co., Inc.
Articles: Motorcycles
Merchandise: Motorcycle parts; parts of internal combustion engines
Factories: Milwaukee, Wauwatosa, and Tomahawk, WI; York, PA
Statement signed: March 11, 1981
Basis of claim: Appearing in
Rate forwarded to Regional Commissioner of Customs: Baltimore, May 1, 1981

(M) Company: Harris Corp.
Articles: Finished semiconductor devices
Merchandise: Unfinished semiconductor assemblies
Factory: Palm Bay, FL
Statement signed: March 9, 1981
Basis of claim: Appearing in
Rate forwarded to Regional Commissioner of Customs: San Francisco, April 22, 1981

(N) Company: Juice Bowl Products, Inc.
Articles: Concentrated grapefruit juice for manufacturing
Merchandise: Grapefruit juice from concentrate and blended juices from concentrate
Factory: Lakeland, FL
Statement signed: February 13, 1981
Basis of claim: Appearing in
Rate forwarded to Regional Commissioner of Customs: Miami, April 28, 1981

(O) Company: Mobay Chemical Corp., Agricultural Chemicals Div.
Articles: Guthion 50 W.P. and Guthion 65 E.C.
Merchandise: Guthion technical
Factory: Kansas City, MO
Statement signed: March 26, 1981
Basis of claim: Used in
Rate forwarded to Regional Commissioners of Customs: Chicago and New York, May 14, 1981
Revokes: T.D. 81–78–S.

(P) Company: Monsanto Co.
Articles: Ethylene; propylene; benzene; naphthalene; butadiene; ethyl benzene; ortho xylene; styrene monomer; phthalic anhydride; polyethylene; acrylonitrile; phenol; santicizer 711; soft alkyl benzene (SAB); alkylate H–230 (hi-boiler); sodium nitrilotriacetate; fuel gas; other products

350-341 O - 81 - 2

Merchandise: Crude condensate Classes I, II, III, and IV
Factories: Alvin and Texas City, TX
Statement signed: March 17, 1981
Basis of claim: As provided in the drawback rate contained in section 22.6(g–1), C.R.
Rate forwarded to Regional Commissioner of Customs: Houston, May 28, 1981
Revokes: T.D. 79–63–P.

(Q) Company: Motor Wheel Corp.
Articles: Automotive and agriculture wheels and parts thereof
Merchandise: Hot rolled steel sheet, strip and blanks
Factories: Lansing and Ypsilanti, MI; Mendota, IL; Newark, DE; LaGrange, IN
Statement signed: January 13, 1981
Basis of claim: Appearing in
Rate forwarded to Regional Commissioner of Customs: New York, May 22, 1981
Revokes: T.D. 79–63–R.

(R) Company: Olin Corp.
Articles: Sodium methylate (dry); sodium methylate (25% solution)
Merchandise: Methyl alcohol (methanol)
Factory: Niagara Falls, NY
Statement signed: December 1, 1980
Basis of claim: Used in
Rate forwarded to Regional Commissioner of Customs: New York, June 2, 1981

(S) Company: Pretty Products, Inc.
Articles: Carpeted mats and rubber mats for cars
Merchandise: Synthetic styrene butadiene rubber
Factory: Coshocton, OH
Statement signed: March 17, 1981
Basis of claim: Used in
Rated forwarded to Regional Commissioner of Customs: Chicago, April 22, 1981

(T) Company: Rohm and Haas Tennessee, Inc.
Articles: Plasticizers (other Paraplex G series and (Monoplex))
Merchandise: Sebacic acid
Factory: Knoxville, TN
Statement signed: February 25, 1981
Basis of claim: Used in
Rate forwarded to Regional Commissioner of Customs: Baltimore, April 21, 1981

(U) Company: Rossville Mills, Inc.
Articles: Upholstery fabric
Merchandise: Nylon and olefin yarns
Factories: Rossville, GA; Chattanooga, TN
Statement signed: February 9, 1981
Basis of claim: Appearing in
Rate forwarded to Regional Commissioner of Customs: New Orleans, April 28, 1981

(V) Company: Safeway Stores, Inc.
Articles: Peanut butter; spoonable and pourable dressings; syrups; bakery products; ice cream
Merchandise: Hard refined sugar; liquid refined sugar; liquid invert sugar
Factories: Various factories as listed in manufacturer's statement
Statement signed: December 16, 1980
Basis of claim: Used in
Rate forwarded to Regional Commissioner of Customs: San Francisco, May 12, 1981

(W) Company: Shell Chemical Co., Div. of Shell Oil Co.
Articles: Bladex (R) 4L
Merchandise: Technical bladex herbicide
Factory: El Paso, IL
Statement signed: December 30, 1980
Basis of claim: Used in
Rate forwarded to Regional Commissioner of Customs: Houston, May 11, 1981

(X) Company: United Technologies Corporation, Pratt and Whitney Aircraft Group, Manufacturing Division
Articles: Aircraft engines and parts thereof as listed in schedule
Merchandise: Finished and semi-finished aircraft parts, forgings, and castings as listed in schedule
Factories: East Hartford, Middletown, North Haven, Rocky Hill and Southington, CT; West Palm Beach, FL; North Berwick, ME
Statement signed: September 16, 1980
Basis of claim: Appearing in
Rate forwarded to Regional Commissioner of Customs: Boston, May 13, 1981
Revokes: T.D. 79-63-Y

(Y) Company: Vertac Chemical Corp.
Articles: Permethrin and Permethrin technical
Merchandise: 3 phenoxy benzyl alcohol (PBA) and permethrin acid-ethyl ester PAE (ethyl chlorsanthemate)

Factory: West Helena, AR
Statement signed: April 6, 1981
Basis of claim: Used in
Rate issued by Regional Commissioner of Customs in accordance with section 22.4(o)(2): Baltimore, May 5, 1981
Revokes: T.D. 79–63–H to cover a change in name from Eagle River Chemical Co.

(Z) Company: A. Wimpfheimer & Bro., Inc.
Articles: Velvet cloth
Merchandise: Rayon yarn
Factory: Stonington, CT
Statement signed: January 13, 1981
Basis of claim: Appearing in
Rate forwarded to Regional Commissioner of Customs: Boston, May 15, 1981

(T.D. 81–191)

Bonds

Approval and discontinuance of Carrier's bonds, Customs Form 3587

Bonds of carriers for the transportation of bonded merchandise have been approved or discontinued as shown below. The symbol "D" indicates that the bond previously outstanding has been discontinued on the month, day, and year represented by the figures which follow. "PB" refers to a previous bond, dated as represented by figures in parentheses immediately following, which has been discontinued. If the previous bond was in the name of a different company or if the surety was different, the information is shown in a footnote at the end of the list.

Dated: July 16, 1981.

Name of principal and surety	Date of bond	Date of approval	Filed with district director/area director/amount
Aero Mayflower Transit Co., Inc., 9998 N. Michigan Rd., P.O.B. 107B, Indianapolis, IN; motor carrier; Hartford Accident & Indemnity Co. (PB 8/20/68) D 6/11/81	Apr. 30, 1981	June 11, 1981	Cleveland, OH $100,000
Alto's Express, Inc., 2301 Garry Rd., Cinnaminson, NJ; motor carrier; United States Fire Ins. Co. D 7/23/81	July 23, 1979	Aug. 24, 1979	Phila., PA $50,000
Borich Transfer Co., 34 Marine Dr., Portland, OR; motor carrier; Safeco Ins. Co. D 8/4/81	Sept. 7, 1979	Sept. 13, 1979	Seattle, WA $25,000

Name of principal and surety	Date of bond	Date of approval	Filed with district director/area director/amount
Cartwright Van Lines, Inc., Cartwright International Van Lines, Inc., Cartwright Ave., Grandview, MO; motor carrier; St. Paul Fire & Marine Ins. Co. D 6/12/81	Nov. 27, 1978	Feb. 23, 1979	St. Louis, MO $25,000
Churchill Transportation, Inc., 2455 24th St., Detroit, MI; motor carrier; Old Republic Ins. Co.	May 15, 1981	May 26, 1981	Detroit, MI $50,000
Marine Transport Service, Inc., d/b/a Container Transfer Service, P.O. Box 4523, Portland, OR; motor carrier; St. Paul Fire & Marine Ins. Co. D 5/25/81	Aug. 23, 1979	Aug. 23, 1979	Portland, OR $25,000
E. Dillingham, Inc., P.O. Box 116, Ogdensburg, NY; freight forwarder; St. Paul Fire & Marine Ins. Co.	May 29, 1981	June 3, 1981	Ogdensburg, NY $50,000
Equipment Express Ltd., 8105 Woodbine Ave., Markham Ontario, Canada; motor carrier; Old Republic Ins. Co. (PB 6/3/80) D 6/3/81[1]	June 3, 1981	June 3, 1981	Detroit, MI $50,000
Hardee's Transport, Inc., P.O. Box 26150, Jacksonville, FL; motor carrier; The Fidelity & Casualty Co. of NY	Feb. 1, 1981	May 29, 1981	Tampa, FL $25,000
Hicklin Motor Lines, Inc., P.O. Box 377, St. Matthews, SC; motor carrier; Fireman's Fund Ins. Co.	Mar. 25, 1981	Mar. 25, 1981	Charleston, SC $25,000
Houston Freightways, Inc., P.O. Box 473, Galena Park, TX; motor carrier; St. Paul Fire & Marine Ins. Co.	May 15, 1981	May 27, 1981	New Orleans, LA $50,000
Jeff's Fast Freight, Inc., 4900 S. Howell Ave., Milwaukee, WI; motor carrier; Fidelity & Deposit Co. of MD	May 18, 1981	June 3, 1981	Milwaukee, WI $25,000
Lindy Trucking, Inc., Industrial Park, Red Wing, MN; motor carrier; The North River Ins. Co. D 5/21/81	Mar. 10, 1980	Mar. 10, 1980	Minneapolis, MN $25,000
Lucius, Inc., 8331 Pontiac St., Commerce City, CO; motor carrier; Northwestern National Ins. Co. of Milwaukee, WI	Mar. 13, 1981	May 29, 1981	El Paso, TX $50,000
Marine Transport Service. See Container Transfer Service			
Morgan Express, Inc., 10130 Monroe St., Dallas, TX; motor carrier; Fidelity & Deposit Co. of MD	Mar. 20, 1981	May 27, 1981	New Orleans, LA $25,000
Murphy Surf-Air Trucking Co., Inc., Blue Grass Field, Versailles Rd., Lexington, KY; motor carrier; Fireman's Fund Ins. Co. (PB 2/17/77) D 5/29/81	May 15, 1981	May 29, 1981	Cleveland, OH $50,000
Phillips Bros. Warehousing & Distributing Corp., 25 Thomas Ave., Balt., MD; motor carrier; Peerless Ins. Co.	Mar. 13, 1981	May 20, 1981	Baltimore, MD $50,000

See footnote at end of table.

Name of principal and surety	Date of bond	Date of approval	Filed with district director/area director/amount
Quick Delivery Service, Inc., 216 N. Belt. Line Hgwy, P.O. Box 7861, Mobile AL; motor carrier; Safeco Ins. Co. of America	Apr. 14, 1981	June 4, 1981	Mobile, AL $25,000
Regency Motor Freight, Inc., 2660 Van Born Rd., Dearborn Heights, MI; motor carrier; American Motorists Ins. Co.	Feb. 4, 1981	Feb. 10, 1981	Milwaukee, WI $25,000
Robinson Cartage Co., 2712 Chicago Dr., SW., Grand Rapids, MI; motor carrier; American Casualty Co.	May 13, 1981	May 26, 1981	Detroit, MI $50,000
Slack Transport Ltd., P.O. Box 579, Caledonia, Ontario, Canada; contract carrier; The Continental Ins. Co.	Apr. 21, 1981	May 13, 1981	Buffalo, NY $100,000
Steve D. Thompson Trucking, 6750 Old Gentilly Rd., New Orleans, LA; motor carrier; St. Paul Fire & Marine Ins. Co.	Apr. 1, 1981	June 4, 1981	New Orleans, LA $25,000
Tri-State Transport, Inc., P.O. Box 4054, Port Wentworth, GA; motor carrier; Reliance Ins. Co.	Apr. 28, 1981	May 1, 1981	Savannah, GA $25,000
Walker's Transport Ltd., P.O. Box 62, Kipp, Alberta, Canada; motor freight; Royal Ins. Co. of America	Feb. 6, 1981	Apr. 14, 1981	Great Falls, MT $25,000
Wes-Flo Co., Inc., 5455 Bonacker Dr., Tampa, FL.; motor carrier; Union Indemnity Ins. Co. of New York	Oct. 29, 1980	Apr. 23, 1981	Tampa, FL $25,000

[1] Surety is St. Paul Fire and Marine Ins. Co.

BON-3-03

GEORGE C. STEUART
(For Marilyn G. Morrison, Director,
Carriers, Drawback and Bonds Division.)

(T.D. 81-192)

Cotton and Manmade Fiber Textile Products—Restriction on Entry

Restriction on entry of cotton and manmade fiber textile products manufactured or produced in the Dominican Republic

There is published below a directive of May 20, 1981, received by the Commissioner of Customs from the Chairman, Committee for the Implementation of Textile Agreements, concerning restriction on entry of cotton and manmade fiber textile products in categories 340, 351, 639 and 649 manufactured or produced in the Dominican Republic.

This directive was published in Federal Register on May 26, 1981 (46 FR 28206), by the Committee.

(QUO-2-1)

Dated: July 17, 1981.

WILLIAM D. SLYNE,
(For Richard R. Rosettie, Acting Director,
Duty Assessment Division).

U.S. DEPARTMENT OF COMMERCE,
INTERNATIONAL TRADE ADMINISTRATION,
Washington, D.C., May 20, 1981.

Committee for the Implementation of Textile Agreements

COMMISSIONER OF CUSTOMS,
Department of the Treasury,
Washington, D.C.

DEAR MR. COMMISSIONER: Under the terms of the Arrangement Regarding International Trade in Textiles done at Geneva on December 20, 1973, as extended on December 15, 1977; pursuant to the Bilateral Cotton, Wool and Man-Made Textile Agreement of August 7 and 8, 1979, as amended, between the Governments of the United States and the Dominican Republic; and in accordance with the provisions of Executive Order 11651 of March 3, 1972, as amended by Executive Order 11951 of January 6, 1977, you are directed to prohibit, effective on June 1, 1981 and for the twelve-month period extending through May 31, 1982, entry into the United States for consumption and withdrawal from warehouse for consumption of cotton and man-made fiber textile products in Categories 340, 351, 639, and 649, produced or manufactured in the Dominican Republic, in excess of the following levels of restraint:

Category	*12-mo level of restraint*
340	139,678 dozen
351	324,167 dozen
639	314,848 dozen
649	1,500,000 dozen

In carrying out this directive entries of textile products in the foregoing categories, produced or manufactured in the Dominican Republic, which have been exported to the United States on and after June 1, 1980, and extending through May 31, 1981, shall, to the extent of any unfilled balances, be charged against the levels of restraint established for such goods during the twelve-month period

beginning on June 1, 1980 and extending through May 31, 1981. In the event that the levels of restraint established for that period have been exhausted by previous entries, such goods shall be subject to the levels set forth in this letter.

The levels of restraint set forth above are subject to adjustment pursuant to the provisions of the bilateral agreement of August 7 and 8, 1979, as amended, between the Governments of the United States and the Dominican Republic which provide, in part, that: (1) specific limits may be exceeded by designated percentages to account for swing; (2) specific limits may also be increased for carryover and carryforward up to 11 percent of the applicable category limit; and (3) administrative arrangements or adjustments may be made to resolve minor problems arising in the implementation of the agreement. Any appropriate future adjustments under the foregoing provisions of the bilateral agreement will be made to you by letter.

A detailed description of the textile categories in terms of T.S.U.S.A. numbers was published in the Federal Register on February 28, 1980 (45 FR 13172), as amended on April 23, 1980 (45 FR 27463), August 12, 1980 (45 FR 53506) and December 24, 1980 (45 FR 85142), and May 5, 1981 (46 FR 25121).

In carrying out the above directions, the Commissioner of Customs should construe entry into the United States for consumption to include entry for consumption into the Commonwealth of Puerto Rico.

The actions taken with respect to the Government of the Dominican Republic and with respect to imports of cotton and man-made fiber textile products from the Dominican Republic have been determined by the Committee for the Implementation of Textile Agreements to involve foreign affairs functions of the United States. Therefore, these directions to the Commissioner of Customs, which are necessary for the implementation of such actions, fall within the foreign affairs exception to the rule-making provisions of 5 U.S.C. 553. This letter will be published in the Federal Register.

Sincerely,

PAUL T. O'DAY,
Chairman, Committee for the
Implementation of Textile Agreements.

(T.D. 81-193)

Cotton Textile Products—Restriction on Entry

Restriction on entry of cotton textile products manufactured or produced in India

There is published below a directive of June 10, 1981, received by the Commissioner of Customs from the Chairman, Committee for

the Implementation of Textile Agreements, concerning restriction on entry of cotton textile products in certain categories manufactured or produced in India. This directive amends, but does not cancel, that Committee's directive of December 16, 1980 (T.D. 81-132).

This directive was published in the Federal Register on June 15, 1981 (46 FR 31300), by the Committee.

(QUO-2-1)

Dated: July 16, 1981.

WILLIAM D. SLYNE,
(For Richard R. Rosettie, Acting Director,
Duty Assessment Division.)

U.S. DEPARTMENT OF COMMERCE,
INTERNATIONAL TRADE ADMINISTRATION,
Washington, D.C. June 10, 1981.

Committee for the Implementation of Textile Agreements

COMMISSIONER OF CUSTOMS,
Department of the Treasury,
Washington, D.C.

DEAR MR. COMMISSIONER: On December 16, 1980, the Chairman, Committee for the Implementation of Textile Agreements, directed you to prohibit entry for consumption, or withdrawal from warehouse for consumption, during the twelve-month period beginning on January 1, 1981 and extending through December 31, 1981 of cotton, wool and man-made fiber textile products in certain specified categories, produced or manufactured in India, in excess of designated levels of restraint. The Chairman further advised you that the levels of restraint are subject to adjustment.[1]

Under the terms of the Arrangement Regarding International Trade in Textiles done at Geneva on December 20, 1973, as extended on December 15, 1977, pursuant to the Bilateral Cotton, Wool and Man-Made Fiber Textile Agreement of December 30, 1977, as amended, between the Governments of the United States and India; and in accordance with the provisions of Executive Order 11651 of March 3, 1972, as amended by Executive Order 11951 of January 6, 1977, you are directed, effective on June 11, 1981, to amend the

[1] The term "adjustment" refers to those provisions of the Bilateral Cotton, Wool and Man-Made Fiber Textile Agreement of December 23, 1977, as amended, between the Governments of the United States and India, which provide, in part, that: (1) within the aggregate, group limits may be exceeded by designated percentages; (2) specific limits may be exceeded by various percentages subject to various provisions of the agreement; (3) consultation levels may be increased upon agreement between the two governments; and (4) administrative arrangements or adjustments may be made to resolve minor problems arising in the implementation of the agreement.

350-341 O - 81 - 3

twelve-month levels of restraint established for cotton textile products in Categories 347/348 and 338/339/340, whether accompanied by a visa or an elephant-shaped certification, to the following:

Category	*Amended 12-mo level of restraint*[1]
347/348	143,770 dozen
338/339/340	997,227 dozen

The actions taken with respect to the Government of India and with respect to imports of cotton textile products from India have been determined by the Committee for the Implementation of Textile Agreements to involve foreign affairs functions of the United States. Therefore, these directions to the Commissioner of Customs, which are necessary for the implementation of such actions, fall within the foreign affairs exception to the rule-making provisions of 5 U.S.C. 553. This letter will be published in the Federal Register.

Sincerely,

PAUL T. O'DAY,
Chairman, Committee for the
Implementation of Textile Agreements.

(T.D. 81-194)

Cotton Textile Products—Restriction on Entry

Restriction on entry of cotton textile products manufactured or produced in the People's Republic of China

There is published below a directive of June 16, 1981, received by the Commissioner of Customs from the Chairman, Committee for the Implementation of Textile Agreements, concerning restriction on entry of cotton textile products in categories 334, 335 and 338, manufactured or produced in the People's Republic of China.

This directive was published in the Federal Register on June 19, 1981 (46 FR 32060), by the Committee.

(QUO-2-1)

Dated: July 16, 1981.

WILLIAM D. SLYNE,
(For Richard R. Rosettie, Acting Director,
Duty Assessment Division).

---

[1] See footnote on p. 15.

U.S. DEPARTMENT OF COMMERCE,
INTERNATIONAL TRADE ADMINISTRATION,
Washington, D.C., June 16, 1981.

Committee for the Implementation of Textile Agreements

COMMISSIONER OF CUSTOMS,
Department of the Treasury,
Washington, D.C.

DEAR MR. COMMISSIONER: Under the terms of the Bilateral Cotton, Wool and Man-Made Fiber Textile Agreement of September 17, 1980, between the Governments of the United States and the People's Republic of China, and in accordance with the provisions of Executive Order 11651 of March 3, 1972, as amended by Executive Order 11951 of January 6, 1977; you are directed to prohibit, effective on June 19, 1981 and for the ninety-day period which began on February 24, 1981 and extended through May 24, 1981, entry into the United States for consumption and withdrawal from warehouse for consumption of cotton textile products in Categories 334, 335 and 338, produced or manufactured in the People's Republic of China and exported on and after February 24, 1981, in excess of the following levels of restraint:

Category	*90-d level of restraint* [1]	
334	45,722	dozen
335	64,250	dozen
338	145,981	dozen

[1] The levels of restraint have not been adjusted to reflect any imports after February 23, 1981.

You are also directed to prohibit, effective on June, 1981, and for the twelve-month period which began on May 25, 1981 and extends through May 24, 1982, entry into the United States for consumption and withdrawal from warehouse for consumption of cotton textile products in Categories 334, 335, and 338, produced or manufactured in the People's Republic of China and exported on and after May 25, 1981, in excess of the following levels of restraint:

Category	*12-mo level of restraint* [1]	
334	148,694	dozen
335	201.956	dozen
338	482,124	dozen

[1] The twelve-month levels of restraint have not been adjusted to reflect any imports after May 24, 1981.

Cotton textile products in Category 334, 335, and 338 which have been exported to the United States prior to February 24, 1981 shall not be subject to this directive.

Cotton textile products in Category 334, 335, and 338 which have been released from the custody of the U.S. Customs Service under the provisions of 19 U.S.C. 1448(b) or 1484(a)(1)(A) prior to the effective date of this directive shall not be denied entry under this directive.

In carrying out this directive, entries of textile products in Categories 334, 335, and 338 which have been exported to the United States on and after February 24, 1981 and extending through May 24, 1981, shall, to the extent of any unfilled balances be charged against the levels of restraint established for such goods during that period. In the event that the levels of restraint established for the period which began on February 24, 1981 and extended through May 24, 1981 have been exhausted by previous entries, such goods shall be subject to the levels established for the twelve-month period which began on May 25, 1981.

A detailed description of the textile categories in terms of T.S.U.S.A. numbers was published in the Federal Register on February 28, 1980 (45 FR 13172), as amended on April 23, 1980 (45 FR 27463), August 12, 1980 (45 FR 53506), December 24, 1980 (45 FR 85142) and May 5, 1981 (46 FR 25121).

In carrying out the above directions, the Commissioner of Customs should construe entry into the United States for consumption to include entry for consumption into the Commonwealth of Puerto Rico.

The actions taken with respect to the Government of the People's Republic of China and with respect to imports of cotton textile products from China have been determined by the Committee for the Implementation of Textile Agreements to involve foreign affairs functions of the United States. Therefore, these directions to the Commissioner of Customs, which are necessary for the implementation of such actions, fall within the foreign affairs exception to the rule-making provisions of 5 U.S.C. 553. This letter will be published in the Federal Register.

Sincerely,

PAUL T. O'DAY,
Chairman, Committee for the
Implementation of Textile Agreements.

(T.D. 81-195)

Cotton Textile Products—Restriction on Entry

Restriction on entry of cotton textile products manufactured or produced in Pakistan

There is published below a directive of May 29, 1981, received by the Commissioner of Customs from the Chairman, Committee for the Implementation of Textile Agreements, concerning restriction on entry of cotton textile products in category 359 manufactured or produced in Pakistan. This directive amends, but does not cancel, that Committee's directive of December 19, 1980 (T.D. 81-153).

This directive was published in the Federal Register on June 4, 1981 (46 FR 29981), by the Committee.

(QUO-2-1)

Dated: July 16, 1981

WILLIAM D. SLYNE,
(For Richard R. Rosettie, Acting Director,
Duty Assessment Division.)

U.S. DEPARTMENT OF COMMERCE,
INTERNATIONAL TRADE ADMINISTRATION,
Washington, D.C., May 29, 1981.

Committee for the Implementation of Textile Agreements

COMMISSIONER OF CUSTOMS,
Department of the Treasury,
Washington, D.C.

DEAR MR. COMMISSIONER: This directive amends, but does not cancel, the directive issued to you on December 19, 1980 by the Chairman, Committee for the Implementation of Textile Agreements, concerning imports into the United States of certain cotton textile products, produced or manufactured in Pakistan.

Under the terms of the Arrangement Regarding International Trade in Textiles done at Geneva on December 20, 1973, as extended on December 15, 1977; pursuant to the Bilateral Cotton Textile Agreement of January 4 and 9, 1978, as amended, between the Governments of the United States and Pakistan, and in accordance with the provisions of Executive Order 11651 of March 3, 1972, as amended by Executive

Order 11951 of January 6, 1977, you are directed to prohibit, effective on May 29, 1981, and for the eighteen-month period beginning on January 1, 1981 and extending through June 30, 1982, entry into the United States for consumption and withdrawal from warehouse for consumption of cotton textile products in Category 359, produced or manufactured in Pakistan, not to exceed the adjusted eighteen-month level of restraint of 1,052,283 pounds.

The actions taken with respect to the Government of Pakistan and with respect to imports of cotton textile products from Pakistan have been determined by the Committee for the Implementation of Textile Agreements to involve foreign affairs functions of the United States. Therefore, the directions to the Commissioner of Customs, which are necessary for the implementation of such actions, fall within the foreign affairs exception to the rule-making provisions of 5 U.S.C. 553. This letter will be published in the Federal Register.

Sincerely,

PAUL T. O'DAY,
Chairman, Committee for the Implementation of Textile Agreements.

(T.D. 81-196)

Cotton, Wool and Manmade Fiber Textile Products—Restriction on Entry

Restriction on entry of cotton, wool, and manmade fiber textile products manufactured or produced in Mexico

There is published below a directive of May 15, 1981, received by the Commissioner of Customs from the Acting Chairman, Committee for the Implementation of Textile Agreements, concerning visa and exempt certification requirements for entry of cotton, wool and man-made fiber textile products manufactured or produced in Mexico.

This directive was published in the Federal Register on May 20, 1981 (46 FR 27516), by the Committee.

(QUO-2-1)

Dated: July 16, 1981.

WILLIAM D. SLYNE,
(For Richard R. Rosettie, Acting Director,
Duty Assessment Division.)

U.S. DEPARTMENT OF COMMERCE,
INTERNATIONAL TRADE ADMINISTRATION,
Washington, D.C., May 15, 1981.

Committee for the Implementation of Textile Agreements

COMMISSIONER OF CUSTOMS,
Department of the Treasury,
Washington, D.C.

DEAR MR. COMMISSIONER: Under the terms of the Arrangement Regarding International Trade in Textiles done at Geneva on December 20, 1973, as extended on December 15, 1977; pursuant to the Bilateral Cotton, Wool and Man-Made Fiber Textile Agreement of February 26, 1979, as amended, between the Governments of the United States and Mexico; and in accordance with the provisions of Executive Order 11651 of March 3, 1972, as amended by Executive Order 11951 of January 6, 1977, you are directed to prohibit, effective on July 1, 1981 and until further notice entry into the United States for consumption, or withdrawal from warehouse for consumption, of cotton, wool and man-made fiber textile products in Categories 300–369, 400–469 and 600–669, produced or manufactured in Mexico, and exported on and after July 1, 1981, which are not visaed or certified for exemption in accordance with the procedures outlined below. Cotton, wool and man-made fiber textile products which have been exported before July 1, 1981 shall not be denied entry for lack of a visa or certification.

Cotton, wool and man-made fiber textile products exported from Mexico on and after July 1, 1981 other than exceptions specified below, shall be visaed with a circular stamp in order to be entered into the United States for consumption, or withdrawn from warehouse for consumption.

Certain cotton, wool and man-made fiber textile products which are exempt from the levels of restraint shall be certified by the Government of Mexico prior to exportation using a rectangular-shaped stamp. The basis for exemption shall be stated on the certification by use of a description, such as, "Handloomed fabric," "Handmade cottage industry products made of handloomed fabric," "$250 or less," or the name of a particular traditional folklore handicraft textile product, as listed on the enclosure to this letter.

Merchandise shall be visaed or certified by the placing of original stamped markings (the visa or certification) in blue ink on the front of the invoice (Special Customs Invoice Form 5515, successor document, or commercial invoice, when such form is used). Each visa and

certification shall include its number and date and the signature of the issuing official. The visa shall also state the correct categories and quantities in the shipment in the applicable category units, except that if the quantity indicated on the export visa is more than that of the shipment, entry shall be permitted despite the inaccuracy. The categories and quantities shall be those determined by the U.S. Customs Service, or the shipment shall be denied entry. Facsimiles of the visa and certification stamps are enclosed.

Merchandise imported for the personal use of the importer, and not for resale, does not require a visa or certification for entry, regardless of value.

Merchandise covered by an invoice which has an exempt certification but contains both exempt and non-exempt textile products shall not be permitted entry. Merchandise which is certified exempt does not require an export visa.

You are directed to permit entry into the United States for consumption and withdrawal from warehouse for consumption of designated shipments of textile products, produced or manufactured in Mexico and exported to the United States, notwithstanding the designated merchandise does not fulfill the aforementioned visa and certification requirements, whenever requested to do so in writing by the Chairman of the Committee for the Implementation of Textile Agreements.

A detailed description of the textile categories in terms of T.S.U.S.A. numbers was published in the Federal Register on February 28, 1980 (45 FR 13172), as amended on April 23, 1980 (45 FR 27463), August 12, 1980 (45 FR 53506) and December 24, 1980 (45 FR 85142) and May 5, 1981 (46 FR 25121).

In carrying out the above directions, the Commissioner of Customs should construe entry into the United States for consumption to include entry for consumption into the Commonwealth of Puerto Rico.

The actions taken with respect to the Government of Mexico and with respect to imports of cotton, wool and man-made fiber textile products from Mexico have been determined by the Committee for the Implementation of Textile Agreements to involve foreign affairs functions of the United States. Therefore, these directions to the Commissioner of Customs, which are necessary for the implementation of such actions, fall within the foreign affairs exception to the rule-making provisions of 5 U.S.C. 553. This letter will be published in the Federal Register.

Sincerely,

EDWARD GOTTFRIED,
Acting Chairman, Committee for the Implementation of Textile Agreements.

Enclosures.

19 CFR Part 18

(T.D. 81-197)

Domestic Baggage Transported Through Foreign Territory; Customs Form Discontinued

AGENCY: U.S. Customs Service, Department of the Treasury.

ACTION: Final rule.

SUMMARY: This rule deletes a provision of the Customs Regulations, relating to procedures used by Customs and carriers for manifesting domestic baggage transported from one port in the United States to another port via a foreign port or through foreign territory. The use of the special tag manifest, In-Transit Baggage Manifest (Customs Form 7524), on baggage transported on trains on the United States-Canadian border is being discontinued because changes in train traffic patterns have made the use of the special tag manifest unnecessary.

EFFECTIVE DATE: July 23, 1981.

FOR FURTHER INFORMATION CONTACT: Robert W. Schenarts, Office of Inspection, U.S. Customs Service, 1301 Constitution Avenue, NW., Washington D.C. 20229 (202-566-5607).

SUPPLEMENTARY INFORMATION:

BACKGROUND

Frequently, checked baggage of domestic origin is transported from port-to-port in the United States by way of a foreign port or through foreign territory. Section 18.15, Customs Regulations (19 CFR 18.15), provides that upon request of the carrier, a special manifest furnished by the carrier may be completed and attached, under Customs supervision, to each piece of that baggage. For any such baggage transported via a Canadian port or through Canadian territory, a joint United States-Canada in-transit baggage card (Customs Form 7524/Canada Customs Form A-21) is used as the special manifest. The Customs Form 7524 identifies the baggage as being in transit, and allows Customs greater discretion in selecting a particular piece of baggage for inspection.

Representatives of the three Customs regions which have used Customs Form 7524 in the past concur that its use should be discontinued. The San Francisco Region no longer has any train traffic to which the form would be applicable, and its use in the Boston and Chicago Regions has been rare in recent years. The Chicago Region already has discontinued use of the form, and the Boston Region now has no baggage car traffic to which the form would be applicable. The representatives of three regions also have contacted affected carriers about the proposal to eliminate use of Customs Form 7524 and have

350-341 O - 81 - 4

met with no objections. The form itself has not been printed by Customs for several years.

Candian Customs does not object to this action because it may continue to use its form(s), or simply examine the baggage.

Accordingly, section 18.15 is deleted.

NOTICE AND PUBLIC PROCEDURE UNNECESSARY

Because this minor amendment involves a matter of internal agency administration and does not impose any additional affirmative duty or burden on the public, but rather, merely simplifies Customs procedure by discontinuing use of an unnecessary form, pursuant to 5 U.S.C. 553(b)(B), notice and public procedure thereon are unnecessary, and pursuant to 5 U.S.C. 553(d)(3), a delayed effective date is not required.

EXECUTIVE ORDER 12291 AND REGULATORY FLEXIBILITY ACT

It has been determined that the amendment is not a "major rule" within the criteria provided in section 1(b) of E.O. 12291, and therefore no regulatory impact analysis has been prepared.

In addition, it has been determined that the amendment is not subject to the provisions of Pub. L. 96-354, the Regulatory Flexibility Act (5 U.S.C. 601-612), because publication of a notice of proposed rulemaking is not required by the Administrative Procedure Act (5 U.S.C. 551 *et seq.*), or any other law.

DRAFTING INFORMATION

The principal author of this document was Todd J. Schneider, Regulations and Information Division, Office of Regulations and Rulings, U.S. Customs Service. However, other Customs personnel participated in its development.

AMENDMENT TO THE REGULATIONS

Part 18, Customs Regulations (19 CFR Part 18), is amended by removing section 18.15.

(R.S. 251, as amended, sections 554, 624, 46 Stat. 743, 759 (19 U.S.C. 66, 1554, 1624))

WILLIAM T. ARCHEY,
Acting Commissioner of Customs.

Approved: July 14, 1981.

JOHN P. SIMPSON,
Acting Assistant Secretary of the Treasury.

[Published in the Federal Register July 23, 1981 (46 FR 37887)]

(19 CFR Part 10)

(T.D. 81-198)

Supplies and Equipment for Aircraft

AGENCY: U.S. Customs Service, Department of the Treasury.

ACTION: Final rule.

SUMMARY: This document amends the Customs Regulations to add Cuba to the list of countries whose aircraft are exempt from the payment of customs duties and internal revenue taxes on supplies and equipment withdrawn from Customs or Internal Revenue custody for use by the aircraft in certain circumstances. It has been determined that the Government of Cuba allows substantially reciprocal privileges to United States-registered aircraft engaged in foreign trade. Based on this determination, a reciprocal exemption from duties and taxes has been granted to aircraft registered in Cuba.

EFFECTIVE DATE: This exemption became effective on January 19, 1981.

FOR FURTHER INFORMATION CONTACT: Benjamin H. Mahoney, Entry Procedures and Penalties Division, U.S. Customs Service, 1301 Constitution Avenue NW., Washington, D.C. 20229 (202-566-5778).

SUPPLEMENTARY INFORMATION:

BACKGROUND

Sections 309 and 317, Tariff Act of 1930, as amended (19 U.S.C. 1309, 1317), provide that foreign-registered aircraft engaged in foreign trade may withdraw articles of foreign or domestic origin from Customs or Internal Revenue custody without the payment of customs duties and/or internal revenue taxes, for use as supplies (including equipment), ground equipment, maintenance, or repair of the aircraft. This privilege is granted if the Secretary of Commerce finds, and advises the Secretary of the Treasury, that the country in which the foreign aircraft is registered allows substantially reciprocal privileges to United States-registered aircraft. Section 10.59(f), Customs Regulations (19 CFR 10.59(f)), lists those countries whose aircraft have been found to be entitled to these privileges.

In accordance with 19 U.S.C. 1309(d), the Assistant Secretary of Commerce for International Economic Policy, to whom the authority was delegated by the Secretary of Commerce (45 FR 11862, February 22, 1980), has found and by letter dated January 19, 1981, has advised the Secretary of the Treasury, that the Government of Cuba allows privileges substantially reciprocal for aircraft supplies to those

provided in 19 U.S.C. 1309 and 1317 to United States-registered aircraft engaged in foreign trade. Corresponding privileges accordingly are extended to aircraft registered in Cuba and engaged in foreign trade, effective as of January 19, 1981.

AMENDMENT TO THE REGULATIONS

To reflect the granting of reciprocal privileges to aircraft of Cuba, section 10.59(f), Customs Regulations (19 CFR 10.59(f)), is amended by inserting "Cuba" in appropriate alphabetical order in the column headed "Country" the number of this Treasury Decision in the opposite column headed "Treasury Decision(s)." and in the opposite column headed "Exemptions, if any, as noted-" add the words "Applicable only as to aircraft supplies." (Secs. 309, 317, 624, 46 Stat. 660, as amended 696, as amended 759 (19 U.S.C. 1309, 1317, 1624))

INAPPLICABILITY OF PUBLIC NOTICE AND DELAYED EFFECTIVE DATE REQUIREMENTS

Because the subject matter of this document does not constitute a departure from established policy or procedures but merely announces the granting of an exemption for which there is a statutory basis, pursuant to 5 U.S.C. 553(b)(B), notice and public procedures thereon are found to be unnecessary and pursuant to 5 U.S.C. 553(d)(1), a delayed effective date is not required.

INAPPLICABILITY OF REGULATORY FLEXIBILITY ACT

This document is not subject to the provisions of sections 603 and 604 of title 5, United States Code, as added by section 3 of Pub. L. 96-354, the "Regulatory Flexibility Act." That Act does not apply to any regulation such as this for which a notice of proposed rulemaking is not required by the Administrative Procedure Act (5 U.S.C. 551 *et seq.*) or any other statute.

EXECUTIVE ORDER 12291

This amendment does not meet the criteria for a "major" regulation as defined in section 1(b) of E.O. 12291. Accordingly, a regulatory impact analysis is not required.

DRAFTING INFORMATION

The principal author of this document was Barbara E. Whiting, Regulations and Information Division, Office of Regulations and Rulings, U.S. Customs Service. However, personnel from other offices of the Customs Service and the Department of Commerce participated in its development.

Dated: June 22, 1981.

JOHN P. SIMPSON,
Acting Assistant Secretary of the Treasury.

[Published in the Federal Register July 27, 1981 (46 FR 38350)]

(19 CFR Part 4)

(T.D. 81-199)

Special Tonnage Tax and Light Money

AGENCY: U.S. Customs Service, Department of the Treasury.

ACTION: Final rule.

SUMMARY: This rule amends the Customs Regulations by adding Papua, New Guinea to the list of nations whose vessels are exempted from the payment of higher tonnage duties than are applicable to vessels of the United States and from the payment of light money. Satisfactory evidence has been furnished by the Department of State that no discriminating duties of tonnage or impost are imposed in ports of Papua New Guinea upon vessels belonging to citizens of the United States or on their cargoes.

EFFECTIVE DATE: The exemption became effective April 3, 1981.

FOR FURTHER INFORMATION CONTACT: Harold Singer, Carriers, Drawback and Bonds Division, U.S. Customs Service, 1301 Constitution Avenue NW., Washington, D.C. 20229 (202-566-5706).

SUPPLEMENTARY INFORMATION:

BACKGROUND

Generally, the United States imposes regular and special tonnage taxes, and a duty of a specified amount per ton, known as "light money," on all foreign vessels which enter United States ports (46 U.S.C. 121, 128). However, vessels of a foreign nation may be exempted from the payment of special tonnage taxes and light money upon presentation of proof satisfactory to the President that no discriminatory duties of tonnage or imposts are imposed by that foreign nation on United States vessels or their cargoes (46 U.S.C. 141). The President has delegated the authority to grant this exemption to the Secretary of the Treasury. Section 4.22, Customs Regulations (19 CFR 4.22), lists those nations whose vessels have been exempted from the payment of any higher tonnage duties than are applicable to vessels of the United States and from the payment of light money.

On April 3, 1981, the Department of State advised the Department of the Treasury that satisfactory evidence had been obtained from the Government of Papua New Guinea that no discriminating duties of tonnage or impost are imposed or levied in ports of that country upon vessels wholly belonging to citizens of the United States, or upon the produce, manufactures, or merchandise imported into that country on United States vessels.

In its communication, the Department of State advised that no discriminating duties of tonnage or impost were imposed or levied upon vessels wholly belonging to citizens of the United States, or upon the produce, manufactures, or merchandise imported into ports of the Papua New Guinea from April 3, 1981.

DECLARATION

Therefore, by virtue of the authority vested in the President by section 4228 of the Revised Statutes, as amended (46 U.S.C. 141), and delegated to the Secretary of the Treasury by Executive Order No. 10289, September 17, 1951, as amended by Executive Order No. 10882, July 18, 1960 (3 CFR, 1959–1963 Comp., Ch. II), and pursuant to the authorization provided by Treasury Department Order No. 101–5 (46 FR 9336), I declare that the foreign discriminating duties of tonnage and impost within the United States are suspended and discontinued, in respect to vessels of Papua New Guinea, and the produce, manufactures, or merchandise imported into the United States in such vessels from Papua New Guinea or from any other foreign country.

This suspension and discontinuance shall take effect from April 3, 1981, in respect to vessels of Papua New Guinea, and shall continue only for so long as the reciprocal exemptions of vessels wholly belonging to citizens of the United States and their cargoes shall be continued.

AMENDMENT TO THE REGULATIONS

To reflect the reciprocal privileges granted to vessels registered in Papua New Guinea, the list in section 4.22, Customs Regulations (19 CFR 4.22), of nations whose vessels are exempted from the payment of any higher tonnage duties than are applicable to vessels of the United States and from the payment of light money, is amended by adding Papua New Guinea in appropriate alphabetical sequence.

(R.S. 251, as amended, 4219, as amended, 4255, as amended, 4228, as amended, sec. 3, 23 Stat. 119, as amended, sec. 624, 46 Stat. 759 (19 U.S.C. 66, 1624, 46 U.S.C. 5, 121, 128, 141))

INAPPLICABILITY OF PUBLIC NOTICE AND DELAYED EFFECTIVE DATE REQUIREMENTS

Because this amendment merely implements a statutory requirement and involves a matter in which the public is not particularly interested, pursuant to 5 U.S.C. 553(b)(B), notice and public procedure thereon are unnecessary. Further, for the same reasons, good cause exists for dispensing with a delayed effective date under 5 U.S.C. 553(d).

INAPPLICABILITY OF REGULATORY FLEXIBILITY ACT

This document is not subject to the provisions of sections 603 and 604 of title 5, United States Code, as added by section 3 of Pub. L. 96-354, the "Regulatory Flexibility Act." That Act does not apply to any regulation such as this for which a notice of proposed rulemaking is not required by the Administrative Procedure Act (5 U.S.C. 551 *et seq.*) or any other statute.

EXECUTIVE ORDER 12291

This amendment does not meet the criteria for a major regulation as defined in section 1(b) of E.O. 12291. Accordingly, a regulatory impact analysis is not required.

DRAFTING INFORMATION

The principal author of this document was Barbara E. Whiting, Regulations and Information Division, Office of Regulations and Rulings, U.S. Customs Service. However, personnel from other offices of the Customs Service and the Departments of State and Treasury participated in its development.

Dated: June 8, 1981.

JOHN P. SIMPSON,
Acting Assistant Secretary of the Treasury.

[Published in the Federal Register July 27, 1981 (46 FR 38350)]

U.S. Customs Service

Customs Service Decisions

DEPARTMENT OF THE TREASURY,
OFFICE OF THE COMMISSIONER OF CUSTOMS,
Washington, D.C., July 15, 1981.

The following are decisions made by the United States Customs Service where the issues involved are of sufficient interest or importance to warrant publication in the Customs Bulletin.

DONALD W. LEWIS,
Director,
Office of Regulations and Rulings.

(C.S.D. 81-161)

Value: Whether Certain Steel Structure Testing Costs Are To Be Considered Assists For Purposes Of The Transaction Value Of The Imported Merchandise

Date: November 7, 1980
File: CLA-2: RRUCV
542187 RP
TAA# 11

This is in reply to your letter dated July 29, 1980, requesting a ruling with respect to the scope of the term "assists" as contained in Title II of the Trade Agreements Act of 1979. Specifically, you inquire whether certain steel structure testing costs are to be considered assists, and therefore, form part of the transaction value of the imported merchandise.

You indicate that you act as an agent for United States purchasers who plan to import steel structures from Italy which are used in conjunction with electrical transmission towers. At the option of the United States purchaser, these steel units are tested to insure that the design is accurate and that the structure is actually capable of carrying specified loads. However, you state that the testing is neither part of the design and engineering work, nor necessary for the fabrication of the product.

In a telephone conversation with a member of my staff, you stated that the testing is performed in Italy, and that the testing costs are paid for by the United States purchaser to the Italian exporter

best copy available

pursuant to a contract. Further, you indicated that the sale for export takes place between the Italian concern and the United States purchaser, and that certain United States purchasers choose not to incur the structure testing expense. Lastly, you stated that when a United States purchaser chooses to incur the testing expense, the exporter always quotes and invoices the testing expense separately.

With respect to the question of assists, it is important to recognize in the context of transaction value that only those items specifically referred to in section 402(b)(1) may be added to the price actually paid or payable when not otherwise included within the price. These items referred to in section 402(b)(1) are:

(A) The packing costs incurred by the buyer with respect to the imported merchandise;

(B) any selling commission incurred by the buyer with respect to the imported merchandise;

(C) the value, apportioned as appropriate, of any assist;

(D) any royalty or license fee related to the imported merchandise that the buyer is required to pay, directly or indirectly, as a condition of the sale of the imported merchandise for exportation to the United States; and

(E) the proceeds of any subsequent resale, disposal, or use of the imported merchandise that accrue, directly or indirectly, to the seller.

Insofar as the term "assist" is concerned, section 402(h)(1)(A) provides:

(h) DEFINITIONS.—As used in this section—

(1)(A) The term 'assist' means any of the following if supplied directly or indirectly, and free of charge or at reduced cost, by the buyer of imported merchandise for use in connection with the production or the sale for export to the United States of the merchandise:

(i) Materials, components, parts, and similar items incorporated in the imported merchandise.

(ii) Tools, dies, molds and similar items used in the production of the merchandise.

(iii) Merchandise consumed in the production of the imported merchandise.

(iv) Engineering, development, artwork, design work, and plans and sketches that are undertaken elsewhere than in the United States and are necessary for the production of the imported merchandise.

In view of the above, we conclude that the testing cost you describe is not an "assist" within the meaning of section 402(h)(1)(A). However, in those instances where the United States purchaser

350-341 O - 81 - 5

pays the Italian exporter for testing of the steel structure, it is our opinion that the testing expense would be included as part of the price paid or payable for the imported merchandise, and would, therefore, form part of transaction value. This is true regardless of the fact that the testing cost may be separately quoted or invoiced.

(C.S.D. 81–162)

Classification: The Dutiable Value of Research and Development Costs Incurred in Connection With the Manufacture of Printed Circuit Boards

Date: November 25, 1980
File: CLA-2:RRUCV
542146 CW
TAA#12

This is in reference to your letter of May 21, 1980, in which you request a ruling regarding the dutiable value of research and development costs incurred by (company name) in connection with the manufacture of printed circuit boards (PCB).

We understand the facts to be as follows: (company) is planning to import electronic computer circuit boards from Mexico under item 807.00, Tariff Schedules of the United States. (Co.) provides preliminary design information concerning the PCB's to a manufacturer in the United States who produces the "bare" boards and delivers them to (Co.). The unassembled PCB's and other electronic components are then transported to Mexico for assembly after which the assembled PCB's are returned to (company name) in California.

It is your position that the expenses to be incurred by (company name) in connection with providing preliminary design information to the U.S. manufacturer form part of the cost of the PCB's which, in turn, is included in the dutiable value of the imported circuit boards.

As you are no doubt aware, with the exception of certain rubber footwear, all merchandise exported to the United States on or after July 1, 1980, is appraised in accordance with the provisions of section 402 of the Tariff Act of 1930, as amended by the Trade Agreements Act of 1979 (TAA). Under the TAA, the preferred basis of appraisement is "transaction value of imported merchandise" which is defined in section 402(b) as the price actually paid or payable for merchandise when sold for exportation to the United States, with additions for certain items not included in that price. These items, which are specifically identified in section 402(b)(1), include "the value, apportioned as appropriate, of any assists."

Section 402(h)(1)(A) defines assist as follows:

"(1)(A) the term 'assist' means any of the following if supplied directly or indirectly, and free of charge or at reduced cost, by the buyer of imported merchandise for use in connection with the production or the sale for export to the United States of the merchandise:

"(i) Materials, components, parts and similar items incorporated in the merchandise.

"(ii) Tools, dies, molds, and similar items used in the production of the imported merchandise.

"(iii) Engineering, development, artwork, design work, and plans and sketches that are undertaken elsewhere than in the United States and are necessary for the production of the imported merchandise."

Accordingly, if the "bare" circuit boards are furnished to the Mexican assembler free of charge or at a reduced cost, they will be considered assists, and their value will be added to the price actually paid or payable for the merchandise.

The Statement of Administrative Action which was approved by Congress provides that the value of assists such as materials components, parts, and similar items incorporated in the imported merchandise shall be determined as follows:

> If the assist was acquired by the importer from an unrelated seller, the value of the assist is the cost of acquiring it. If the element was produced by the importer or person related to him, its value would be the cost of producing it. The value shall include transportation costs to the place of production.

Generally, where an assist is purchased from an unrelated party, the cost of acquiring the assist will be the purchase price plus transportation costs and other costs incidental to the transportation from the United States to the place of foreign production. However, where the buyer furnishes to the unrelated person from whom he acquires the assist any item which otherwise falls within the definition of assist set out above, that item shall be considered to be an assist which is furnished indirectly by the buyer, and its value shall be added to the price actually paid or payable, as provided by the statute.

In the instant case, that which is being furnished to the person from whom the circuit boards are to be acquired, that is, design work undertaken in the United States, does not fall within the definition of assist and, accordingly, will not be added to the value of the "bare" circuit board or to the price actually paid or payable for the imported merchandise.

If you have any further questions, please do not hesitate to contact us.

(C.S.D. 81-163)

Subject: Classification: A Border Added to an "Antique" Embroidery Does Not Constitute a Repair to an Antique as Prescribed in Item 766.20, TSUS

Date: December 29, 1980
File: CLA-2:RRUCSC
055824 TL

DISTRICT DIRECTOR OF CUSTOMS,
New Orleans, Louisiana.

DEAR SIR: This response to the application for Further Review of Protest, dated May 22, 1980, concerns protest number 1901-0-000004, filed on behalf of the importer of "antique" embroideries, entry number 400915, dated July 19, 1978.

Issues: (1) Are these embroideries repaired by the addition of these borders?

(2) Did the addition of antique or recent borders to an embroidery cut from an antique kimono preclude its entry as an antique?

(3) Are embroideries produced in the People's Republic of China, which are purchased in Hong Kong, entitled to column 1 rates of duty?

Facts: Sections of embroidered material cut from antique kimonos which are produced in the People's Republic of China have antique and non-antique borders attached to them. These embroideries are imported into Hong Kong and sold to the importer. They were entered July 19, 1978, and the entry was liquidated December 7, 1979, under a tariff provision for articles of silk.

Law and analysis: Item 766.20, Tariff Schedules of the United States (TSUS), is a provision for, ". . . other antiques made prior to 100 years before their date of entry; all the foregoing articles, including such articles which have been repaired or renovated without changing their original form or character. . . ." To be dutiable, it must have undergone a change in form or character so as to preclude it from being an antique.

Item 766.20, TSUS provides for a duty on the value of repairs made to an article which has been ". . . repaired with a substantial amount of additional material within 3 years prior to importation. . . ."

Webster's New Collegiate Dictionary defines "repair", "to restore by replacing a part or putting together what is torn or broken. . . ." The addition of this border is not a repair because it does not replace a part, or put together what is torn or broken.

As indicated, if the form or character of an antique is changed, it is no longer an antique. This principle has been honored in various court cases and administrative precedents. In *Grant Art Galleries*

v. *United States*, 2 CCR 341, C.D. 157, the court heard expert testimony and concluded, ". . . that the repairs to which they (silver spoons) were subjected were minor and not sufficient to change the classification thereof." In *American Shipping Co.* v. *United States*, C.D. 54, (1938), the court determined that antique bowl liners which had two small pieces removed and handles and mounts added to form bowls were converted into different articles which were not free of duty because they did not exist in their imported condition before 1830, the date used to determine whether an article was an antique. Administrative precedent (058468, dated August 14, 1978; 053745, dated November 17, 1977; internal advice 49/77; and 058290 dated May 16, 1978) indicates that if the addition of an object merges with the antique to form a new article, the article is dutiable. Although administrative and judicial precedent such as 058299, dated May 26, 1978 and *Kronfeld, Saunders & Co. et al.* v. *United States*, 5 Ct. Cust. Appls. 222, TD, 34399 indicates that paintings imported in frames are classified separately from their frames, we view the present situation as distinguishable. Each of these embroideries has been cut from an antique kimono and had a border placed on it. Like *Grant*, supra, and *American Shipping*, supra, the changes which have been wrought on these articles have transformed them from one object to an entirely different one. We are of the opinion that this transformation changes the form and character of these objects and precludes their classification under item 766.20, TSUS.

Products of the People's Republic of China which are entered after February 1, 1980, are accorded column 1 rates of duty. Because these articles were entered July 19, 1978, and liquidated December 7, 1979, they are dutiable at the column 2 rate of duty. Accordingly, the protest should be denied.

(C.S.D. 81-164)

Subject: Classification: Nitrocellulose used in the Manufacture of Explosives is Classifiable as Explosives in Item 485.50, Tariff Schedules of the United States

Date: January 6, 1981
File: CLA-2:CO:R:CV:G
066871 JH

This is in reference to your submission concerning the classification of nitrocellulose.

It is your position that nitrocellulose is a high molecular polymer, and as such, should be classifiable under the provision for cellulosic plastics materials in item 445.25, TSUS, regardless of whether or

not it is intended to be used in the production of lacquer or smokeless powder. You believe that Customs is in error in classifying some nitrocellulose under the provision for explosive substances in item 485.50, TSUS. You note that a high nitrogen content is required for smokeless powder manufacture since it imparts faster burning thereby creating the element of propulsion. A nitrocellulose explosive you describe as any explosive made with the use of nitrocellulose, but believe that nitrocellulose is not considered an explosive in itself.

A chart was submitted to illustrate the characteristics of nitrocellulose by nitrogen content. Plastics were shown to have a nitrogen content of between 11 to 12 percent; dynamite, between 12 and 12½ percent; smokeless powder between 12 and 13½ percent; military grades between 12 and 13½ percent.

Under the General Interpretative Rules, General Headnote 10, TSUS, an imported article which is described in two or more provisions of the schedules is classifiable in the provision which most specifically describes it.

Although nitrocellulose may be a plastic material, it is still possible that there is a grade chiefly used as an explosive. In view of the number of categories in the chemical schedules, it is not unusual for different grades of the same chemical to be classified in different provisions of the tariff schedules—e.g.—ammonium nitrate is classifiable both as an inorganic compound and as a fertilizer. You will note that ammonium nitrate, fuel sensitized is listed as a statistical reporting category schedule.

We agree with your statement that nitrocellulose with a high nitrogen content is used in the manufacture of explosives, and that the nitrogen content is controlled during manufacture to supply the proper polymer according to technical needs of the end uses.

According to the chart submitted by you, nitrocellulose with a nitrogen content between 12 and 13½ percent appears to be chiefly used for explosives.

A review of the technical literature indicates that one criterion for an item to be considered an explosive is its ability to be detonated by high pressure shock waves. Nitrocellulose of high nitrogen content may detonate if present in large quantities or if confined.

Accordingly, Customs is of the opinion that while nitrocellulose may be a plastic material, there are grades of the material which are chiefly used as explosives. Therefore, the classification of those grades of nitrocellulose chiefly used in the manufacture of explosives in item 485.50, TSUS, as explosive substances not specially provided for, is affirmed.

(C.S.D. 81-165)

In-Bond: The Designation Of Carriers To Receive Merchandise For Transportation In Bond

Date: January 6, 1981
File: BON-1-CO:R:CD:D L 212389

Issue: Several issues are raised in connection with Legal Determinations (L.D.) 79-0119 and 80-0079. They are:

1. Must a carrier be affirmatively designated by a Federal agency outside of the Department of the Treasury with a written document specifically authorizing it to handle merchandise in order to qualify it for (Customs) bonded carrier status?

2. Should L.D. 80-0079 be reconsidered in so far as it relates to 49 U.S.C. 10927(a)(2)?

3. In connection with two specific documents submitted with the request, does either designate the carrier as a handler of merchandise within the meaning of 19 U.S.C. 1551?

4. If Customs discovers that a carrier has been allowed to operate as a bonded carrier and it has not been affirmatively designated as a handler of merchandise by a Federal agency outside the Department of the Treasury, what actions should be taken in order to be brought into compliance with the intent of the Congress expressed in 19 U.S.C. 1551 and clarified in L.D. 79-0119?

Facts: A Customs field office has raised both general and specific questions concerning the designation of carriers to receive merchandise for transportation in bond.

Law and analysis: Section 551 of the Tariff Act of 1930, as amended (19 U.S.C. 1551), provides that there may be designated as a carrier of bonded merchandise (1) any common carrier of merchandise owning or operating a railroad, steamship, or other transportation line and/or route for the transportation of merchandise in the United States, (2) any contract carrier authorized to operate as such by any agency of the United States, or (3) any freight forwarder authorized to operate as such by any agency of the United States. It also provides for the designation of private carriers of bonded merchandise in the discretion of the Secretary of the Treasury.

There is no allegation in the file that either of the applicants is a contract carrier or freight forwarder, or seeks designation as a private carrier. Accordingly, if the applicants are to be designated as carriers of bonded merchandise, the action will be based upon the ground that the applicants are common carriers.

Sections 112.12(a) and (b), Customs Regulations (19 CFR 112.12(a) and (b)), set out general and special requirements for carriers desir-

ing to be authorized to receive merchandise for transportation in bond. Section 112.12(b)(1), Customs Regulations (19 CFR 112.12 (b)(1)), provides that common carriers other than railroad, steamship, or airline companies generally known to be engaged in common carriage, shall file a certified extract of its articles of incorporation or charter showing that it is authorized to engage in common carriage, and a statement that it is operating or intends to operate as a common carrier.

The Customs Service has held in a number of cases that an individual may be designated a bonded carrier under 19 U.S.C. 1551 provided he establishes that he has the status of a common carrier either by producing evidence of recognition by an appropriate governmental agency or by establishing that he in fact does operate as a common carrier. See C.I.E. 681/65 dated May 5, 1965; and Customs Service letters BON-3-03-R:CD:D, 206891, dated October 22, 1976, to the District Director of Customs, Bridgeport, Connecticut; BON-1-03-R:CD:D, 206009, dated March 26, 1976, to the Area Director of Customs, Newark, New Jersey; DB 241.2 JL, dated June 30, 1972, to the District Director of Customs, St. Albans, Vermont; DB 241.2M, dated February 7, 1969, to the Regional Commissioner of Customs, Boston, Massachusetts; DB 241.2 L, dated May 20, 1963, to the Collector of Customs, Pembina, North Dakota; DB 241.2 M, dated March 29, 1962, to the Collector of Customs, New Orleans, Louisiana; DB 241.1 M, dated December 7, 1961, to the Collector of Customs, Wilmington, North Carolina; and DB 241.2, dated August 10, 1960, to the Collector of Customs, St. Louis, Missouri.

With respect to the first issue, therefore, a carrier need not be affirmatively designated by a Federal agency outside of the Department of the Treasury with a written document specifically authorizing it to handle merchandise in order to be designated as a carrier of bonded merchandise unless it is a contract carrier or a freight forwarder. It need only comply with the statute and regulations; that is it must own or operate a railroad, steamship, or other transportation line or route for the transportation of merchandise in the United States and must establish that it has the status of a common carrier either by producing evidence or recognition by an appropriate governmental agency of by establishing that in fact it does operate or intends to operate as a common carrier.

The second issue is whether L.D. 80-0079 should be reconsidered insofar as it relates to 49 U.S.C. 10927(a)(2). In this connection, a Canadian carrier has applied for bonded carrier status and qualifies under 49 U.S.C. 10927(a)(2) as discussed in L.D. 80-0079. The Seattle office of the Interstate Commerce Commission states that

no permit is issued and that they are prohibited from writing a letter authorizing the carrier to operate under that statute. We believe L.D. 80–0079 should be reconsidered with respect to both issues raised in that decision insofar as it is inconsistent with the above discussion. That is, no certificate from an appropriate agency of the United States is required and the issue of whether the carrier is exempt from interstate commerce regulations of the Interstate Commerce Act is irrelevant.

Thus, if a carrier owns or operates a railroad, steamship, or other transportation line or route for the transportation of merchandise in the United States and is generally known to be, or can establish in fact that it does operate or intends to operate as a common carrier, and meets all other requirements, it should be approved as a carrier of bonded merchandise. Indeed, section 112.13, Customs Regulations (19 CFR 112.13), provides that the district director shall approve an application for authorization as carriers of bonded merchandise provided he is satisfied that (a) the amount of the bond is sufficient, (b) all documents required have been furnished and are in proper form, and (c) the fee prescribed has been paid.

The holding in L.D. 80–0079 should be modified to state that Canadian motor carriers that meet the requirements of section 112.12, Customs Regulations (19 CFR 112.12), may be designated as carriers of bonded merchandise pursuant to section 18.1(a), Customs Regulations (19 CFR 18.1(a)). Temporary authority as common carriers in the United States or authority as motor carriers in foreign commerce within the meaning of 49 U.S.C. 10927(a)(2) is deemed sufficient to establish that the carrier is in fact a common carrier.

In addition, the first sentence of the suggested stipulation to the Carrier's Bond that is set out in L.D. 80–0079 should be modified as follows:

> This bond shall be discontinued upon expiration, suspension, or revocation of the temporary authority to operate as a common carrier in the United States unless the temporary authority is timely extended or replaced by permanent authority or unless the principal otherwise establishes that it is operating as a common carrier as defined in section 112.1(a)(c), Customs Regulations (19 CFR 112.1(a)(c)).

Legal Determination 79–0119 is overruled insofar as it is inconsistent with this decision. Specifically, as noted above, there is no requirement that a common carrier be licensed by the Interstate Commerce Commission or other federal agency. It must meet the criteria for designation as a carrier of bonded merchandise in 19 U.S.C. 1551 and section 112.12, Customs Regulations (19 CFR 112.12).

The third issue relates to two documents submitted with the request and asks whether either designates the carrier as a handler of merchandise within the meaning of 19 U.S.C. 1551. The two documents are (1) CAB Form 298–A (Rev. 10–74), Registration, Reregistration and Amendments under Part 298 of the Economic Regulations of the Civil Aeronautics Board, and (2) FAA Form 8430–18 (3–79), Air Carrier Operating Certificate.

We have been informally advised by the Federal Aviation Administration that an air carrier operating under an Air Carrier Operating Certificate is deemed to be a common carrier. Accordingly, the applicant may be considered a common carrier within the purview of 19 U.S.C. 1551, and if it has otherwise complied with the requirements of section 112.12, Customs Regulations (19 CFR 112.112), may be designated as a carrier of bonded merchandise.

In an issue not raised in the internal advice inquiry, but discussed in connection with it, a water carrier owning or operating a steamship line serving a water route on coastwise movement of cargo between Washington and Alaska has requested designation as a carrier of bonded merchandise. The carrier states that it does not have a certificate or authorization from a Federal agency because it is not required to have one. It states further that it is subject to compliance with the rules of the Interstate Commerce Commission only with respect to that Commission's tariffs, and that there is no provision for the Federal Maritime Commission to issue a certificate of authority to a common carrier engaged in coastwise trade.

If this carrier owns or operates a steamship line or route for the transportation of merchandise in the United States, has met the general requirements of section 112.12(a), Customs Regulations (19 CFR 112.12(a)), and, if not generally known to be engaged in common carriage, has filed a certified extract of its articles of incorporation or charter showing that it is authorized to engage in common carriage, and a statement that it is operating or intends to operate as a common carrier, as provided in section 112.12(b)(1), Customs Regulations (19 CFR 112.12(b)(1), it may be designated a carrier of bonded merchandise.

The final issue is what action should be taken if the Customs Service discovers that a carrier has been allowed to operate as a bonded carrier without being affirmatively designated as a handler of merchandise by a Federal agency outside the Department of the Treasury.

Unlike contract carriers and freight forwarders, there is no law or regulation requiring a common carrier to file a certificate from an appropriate Federal agency. While there is no established procedure for checking the activities of a bonded carrier after its bond is approved, if the Customs Service discovers that a common carrier is not

authorized to engage in common carriage or is not operating as a common carrier, the carrier should be given an opportunity to establish that it is authorized to engage in common carriage or that it is operating or intends to operate as a common carrier. If it is unable to do this, its designation as a carrier of bonded merchandise should be revoked and its Carrier's Bond terminated.

Holding: 1. A common carrier, unlike a contract carrier or freight forwarder, need not be affirmatively designated by a Federal agency outside the Department of the Treasury with a written document specifically authorizing it to handle merchandise in order to qualify for designation as a carrier of bonded merchandise. It need only comply with the requirements of 19 U.S.C. 1551 and Part 112, Customs Regulations (19 CFR 112).

2. The holdings in L.D. 79–0119 and L.D. 89–0079 are overruled or modified as set out in *Law and Analysis*, above.

3. An Air Carrier Operating Certificate issued by the Federal Aviation Administration is deemed sufficient to establish that the holder is a common carrier.

4. There is no need for a common carrier to be affirmatively designated as a handler of merchandise by a Federal agency outside of the Department of the Treasury. If the Customs Service discovers that a common carrier designated as a carrier of bonded merchandise is not in fact a common carrier, the carrier should be given an opportunity to establish that it is a common carrier. If it is unable to do so, its designation as a carrier of bonded merchandise should be revoked and its Carrier's Bond should be terminated.

(C.S.D. 81–166)

Subject: Bonds: Merchandise Entered for a Trade Fair May Subsequently be Entered Under Temporary Importation Bond (TIB)

Date: January 8, 1981
File: CON–1–CO:R:CD:D L 212095

Issue: An inquirer requests reconsideration and revocation of Customs Service Decision (C.S.D.) 80–161. That decision held that a temporary importation under bond (TIB) entry may not be substituted for a trade fair entry.

Facts: The inquirer has submitted a lengthy brief citing, among other things, the Trade Fair Act of 1959, the legislative history of the Act, and the Customs Regulations relating to TIB entries in support of its contention that a TIB entry may replace a trade fair entry and that C.S.D. 80–161 be reversed.

Law and analysis: Since publication of C.S.D. 80–161, a December 6, 1957, ruling of the Customs Service (DB 516.41) has come to our attention. That ruling predates the Trade Fair Act of 1959 and is based upon regulations promulgated under the Act of August 22, 1912 (T.D. 32973). It holds that articles may be withdrawn from exhibition at a trade fair for entry under bond under section 308(3) Tariff Act of 1930, as amended (the predecessor of item 864.20, Tariff Schedules of the United States), for the purpose of being used as samples to take orders for similar merchandise. The ruling was based upon paragraph 9 of T.D. 32973 which provided that articles may be withdrawn from a fair for consumption, warehouse, or exportation and that a section 308 entry is considered a consumption entry for Customs purposes although a bond must be filed therewith. The ruling further states that the period of the sectiion 308(3) bond filed would necessarily start from the date of the original importation.

With respect to the Trade Fair Act of 1959, 19 U.S.C. 1751–1756, the legislative history of that Act states that its purpose is as follows:

> The purpose of H.R. 5508, to be cited as the "Trade Fair Act of 1959" is to provide permanent legislation permitting the free entry under bond of imported Articles for exhibition or use at fairs designated by the Secretary of Commerce. It will avoid the necessity for the enactment of separate laws in behalf of individual fairs, and the repeated issuance of regulations, as in the past. H.R. 5508 follows the basic provisions of the numerous trade fair laws which have been enacted for individual fairs.

Section 147.42(a), Customs Regulations (19 CFR 147.42(a), provides that artiles entered for a trade fair "may be entered for consumption, for warehouse, or under any other provision of the Customs laws, or for another fair, or may be transferred to other Customs custody status or to a foreign-trade zone. . . . at any time before, or within 3 months after, the closing date of the fair."

The current provision for the disposition of articles entered for a trade fair is, by its terms, less restrictive than paragraph 9 of T.D. 32973 since it is not limited to entry for consumption, warehouse, or exportation.

Section 4(d) of the Trade Fair Act, 19 U.S.C. 1753(d), and section 147.42(c), Customs Regulations (19 CFR 147.42(c)), provide that whenever any article entered for a trade fair is transferred to other Customs custody status or entered under a provision of the Customs laws, the period prescribed for the performance of any act required by the provision governing the status to which the article is transferred, or under which the article is entered, shall run from the date of such transfer or entry.

Conversely, Headnote 1(a) to Schedule 8, Part 5C, Tariff Schedules of the United States (TSUS), provides in part that "The articles

described in the provisions of this subpart . . . may be admitted into the United States without the payment of duty, under bond for their exportation within one year from the date of importation . . .".

The legislative history of the Trade Fair Act of 1959 offers no comment on section 4(d). In view of the apparent conflict as to when the period of a temporary importation under bond begins, that is, from date of importation under Schedule 8, Part 5C, TSUS, or from the time of the TIB entry from a trade fair, we conclude that in enacting the Trade Fair Act of 1959, Congress intended to grant a limited exception to the TIB provisions in the case of merchandise entered under TIB from a trade fair.

Inasmuch as we have determined that merchandise entered for a trade fair may subsequently be entered under TIB, and that C.S.D. 80–161 is in error, it is not necessary to address the inquirer's discussion of the issue.

Holding: Articles entered for a trade fair pursuant to Part 147, Customs Regulations (19 CFR 147) may, at any time before, or within three months after, the closing date of the fair, be admitted temporarily free of duty under bond. The period of the temporary importation bond in such an instance will begin at the time of the TIB entry from the trade fair.

C.S.D. 80–161 is revoked.

(C.S.D. 81–167)

Subject: Drawback: Cable Transported to and Laid Between Foreign Countries and/or Their Possessions is Considered Exported for Purposes of Drawback

Date: January 14, 1981
File: DRA–1–CO:R:CD:D B 212516

Issue: Assuming compliance with the drawback law and regulations, is underwater communications cable, manufactured wholly or partly in the United States with foreign components, eligible for drawback when it is shipped and laid between foreign countries and their possessions or between these countries and or possessions and Hawaii.

Facts: A cable manufacturing company has asked if its cable would be exported for purposes of drawback when the cable is laid along the following route:

1. Australia—Norfolk Island
2. Norfolk Island—Fiji
3. Fiji—Hawaii
4. Hawaii—Canada
5. Norfolk Island—Canada

350-341 O - 81 - 6

Law and analysis: In order to obtain drawback, the claimant must prove exportation of the articles upon which drawback is claimed. To constitute an exportation for purposes of the drawback law requires two essential elements: (1) a severance of goods from the mass of things belonging to this country, i.e. a carrying of the goods out of the country, and (2) an intention of uniting them with the mass of things belonging to some foreign country (*The National Sugar Refining Company* v. *United States* 26 Cust. Ct., at 98, C.D. 1307, March 6, 1951).

A Headquarters ruling of August 12, 1955 (DB 731.1), held that cable, shipped from the United States to Newfoundland, attached there at a shore installation; and then unreeled and laid at sea for attachment eventually to a point in Scotland, was exported for purposes of drawback. Further, a ruling of March 7, 1973 (R:CD:D 731.1 200671), held that shipments to installations in foreign waters were exportations.

Any cable which is shipped to any of the countries or administered islands listed above, except Hawaii, would be considered to have been exported.

In regard to cable laid to or from Hawaii (or any other point in the Customs territory of the United States), section 10.41(f), Customs Regulations (19 CFR 10.41(f)), provides in pertinent part:

> . . . With respect to international cables laid under the territorial waters of the United States but brought on shore in the United States, only that part of the cable in the United States between the point of entry into the territorial waters of the United States and the first point of support on land in the United States shall be admitted without payment of duty.

Any cable transported directly to Hawaii would not be considered exported until such time as the cable is unreeled outward from the last point of installation on land. That cable laid from the first land installation further inland would not be considered exported. Cable laid from Canada to Hawaii and thence to Fiji would be considered exported except for the incoming and outgoing portions laid from the first land installation further inland in Hawaii. Cable exported to Canada or Fiji for laying directly to Hawaii would be considered exported; however, entry would have to be made and duty paid on that portion laid in Hawaii from the first land installation further inland. Duty paid would be that applicable to the cable or the amount refunded as drawback, whichever is lesser.

Holding: All cable transported to and laid between foreign countries and/or their possessions is considered exported for purposes of the drawback law. Cable laid from foreign countries or their possessions to points in the United States is considered exported, except

entry must be made and duty or refund of drawback made for any portion laid from the first United States land installation further inland. Cable laid from the United States directly to foreign countries and/or their possessions is considered exported from the last United States land installation outward.

(C.S.D. 81-168)

Trademark: The Importation of Foreign Merchandise Bearing an American Trademark

Date: February 4, 1981
File: TMK-3 CO:R:E:E
713277 SO

This ruling concerns the applicability of the prohibitions set forth in 19 U.S.C. 1526 against the importation of foreign merchandise bearing an American trademark.

Issue: Would the importation of a shoe bearing a mark described as a two part design; a curved tapering stripe on the left, coupled with a semicircular stripe to the right, infringe upon the rights of the American trademark owner, BRS, Inc. of Beaverton, Oregon, which has recorded their trademark with Customs for import protection.

Facts: Customs has issued a demand for redelivery of 23,376 pairs of men's and boys' athletic shoes, imported from Taiwan, bearing a two part design; a curved tapering stripe on the left, coupled with a semicircular stripe to the right, suspected of infringing the trademark "WING DESIGN," which is a low swooping vanishing colored curve that ends in a sharp point. BRS, Inc., an Oregon Corporation, has recorded their "WING DESIGN" and "NIKE" trademarks with Customs for import protection. Our San Francisco, California, district office has asked for our opinion as to whether those shoes would be subject to seizure and forfeiture as infringing upon the rights of the American trademark owner. A sample shoe was submitted from the shipment in question along with a photograph of a shoe bearing the "WING DESIGN" trademark, and a letter from the attorney for the importer requesting that our San Francisco office seek internal advice from Customs Headquarters on the question referred to above.

Law and analysis: Section 526 of the Tariff Act of 1930, as amended (19 U.S.C. 1526), prohibits the importation into the United States of any merchandise of foreign manufacture bearing a trademark owned by a corporation created or organized within the United States,

provided a copy of such trademark registration is filed with the Secretary of the Treasury and recorded in the manner provided by regulations (19 U.S.C. 133.1–133.7). Infringement of federally registered marks is governed by the test of whether defendant's use is likely to cause confusion, to cause mistake, or to deceive.

Stripe designs on shoes, such as the Nike "WING DESIGN," are considered to be in the category of "weak" marks, in light of the common use of stripes and bar designs affixed to the sides of athletic shoes. In one geographic area (Northern Virginia), on one particular day (June 11, 1977), there were over 54 different sports shoes for sale and on display having various configurations of stripes on their sides. *See Daeler K.G.* v. *Superga S.p.A.*, 204 USPQ 688.

When comparing conflicting marks to determine whether or not they are confusingly similar, it is important to consider the impression which the mark as a whole creates on the average reasonably prudent purchaser. It is evident from the appearance of the two marks in question that the two part design on the imported shoes does not resemble the Nike "WING DESIGN" trademark, which has been recorded with Customs for import protection by the American Trademark Owner, BRS, Inc. We note that if the imported shoe were to be displayed upside down, part of the two part design would resemble the "WING DESIGN" trademark. However, we are of the opinion, that under the normal test applicable to unsophisticated buyers of a product at retail, there would be little likelihood of confusion.

Holding: Entry of the imported shoes bearing the two part design described above would not be prohibited as infringing on the registered trademark, "WING DESIGN". The shipment currently under detention may be released to the importer. Our San Francisco office may furnish a copy of this ruling to all parties concerned. We decline to comment on the other marks claimed to be infringing by BRS, Inc. However, as in this case, we will be happy to furnish our views upon detention of a suspected infringing shipment.

(C.S.D. 81–169)

Entry: Manual Supplement 3254 Concerning Courier Service Importations

Date: February 9, 1981
File: ENT–1–01 CO:R:CV:V
715196 MK

This refers to your letters of January 5 and January 16, 1981, on behalf of the National Customs Brokers and Forwarders Association of America, Inc., concerning Manual Supplement 3254, which deals with courier service importations.

You believe the Manual Supplement conflicts with 19 U.S.C. 1641, which states that only a duly licensed customhouse broker is authorized to transact Customs business on behalf of another.

You cite several Headquarters rulings in which we have looked behind the entry documents to determine the true facts, and you believe that the Manual Supplement is contrary to those rulings. You urge that we withdraw and redraft it to provide that only licensed customhouse brokers can prepare and file entries when a Customs transaction is done on behalf of another party.

You also believe that the term "business records," which the Manual Supplement provides may be cleared under a baggage declaration, requires clarification because it could be interpreted as applying to articles classifiable under Part 5 of Schedule 2, some of which are dutiable. To protect the revenue and the importing public, you recommend that we require these articles to be cleared as cargo unless they qualify as intangibles, articles classified under item 870.10, Tariff Schedules of the United States (TSUS), or articles of "nominal value" under T.D. 55851.

In resolving the question of the couriers' right to file entries for merchandise they import, several statutory provisions must be considered. Title 19, U.S.C. 1484(h) provides that any person certified by the incoming carrier to be the owner or consignee of the merchandise may make entry thereof either in person or by an authorized agent, in the same manner as a consignee within the meaning of 19 U.S.C. 1483. Section 1641 prohibits anyone except a licensed broker from transacting Customs business on behalf of another. While these sections may appear to be in conflict, they both must be read in conjunction with section 1483. That section states: "For purposes of this subtitle— (1) All merchandise imported into the United States shall be held to be the property of the person to whom it is consigned. (2) A person making entry of merchandise under the provisions of subdivision (h) . . . of section 1484 of this title . . . shall be deemed the sole consignee thereof."

There is no exception for section 1641, which is part of the same subtitle. As far as Customs is concerned, any consignee in the normal chain of custody is the owner, and any business he transacts is for his own account (section 1483). Admittedly, this may be a fiction. However, it is a fiction created by statute and upheld by the courts. See, for example, *Top Form Brassiere Mfg. Co.* v. *United States*, R.D. 11770 (1972), and the cases cited in that decision.

For Customs to administratively hold otherwise is to negate one of the major purposes of sections 1483 and 1484(h), which is to allow Customs to look to the consignee and not be forced to go hunting for the actual owner.

We believe the rulings you cite are distinguishable from the facts involved in courier importations. For example, Ruling No. 711063 concerned a broker who was not licensed in the district in which he wished to file an entry, and who held a bill of lading consigned "to order." Presumably, a bill of lading or an airway bill covering a courier shipment is not consigned "to order." If it were, Customs should not accept it for entry purposes. Ruling No. 399890 also involved a bill of lading consigned "to order."

Ruling No. 399899 dealt in part with completion of one of the declarations printed on a formal consumption entry form. These declarations have been somewhat modified since the date of that ruling (1967), and in any case, the preponderance of courier shipments do not require the filling of a formal entry.

Ruling No. 713041 addressed a unique situation not applicable to courier importations, in which Customs personnel were aware that carriers were being requested to falsify and were, in fact, falsifying documents which certified that the person named therein was the owner or consignee of the merchandise.

Ruling No. 304062 involved shipments sent directly to an importer. Unlike courier service importations, the shipments, the subject matter of that ruling, were not imported by the messenger service and, of course, the messenger service was not designated as consignee of the shipments. Therefore, we ruled that the messenger service could not file entries on the importer's behalf.

Finally, C.S.D. 79–333 involved the acceptability of a power of attorney (Customs Form 5291) granted by an importer to his attorney-at-law. The ruling involved no question of the attorney's right to enter merchandise for which he was legally considered to be the consignee.

While we are not unmindful of the validity of your presentation with regard to a courier service's right to file entries, we conclude that the preponderance of the statutory and judicial authority supports our position.

With regard to the other issue you raise–the need to clarify the term "business records"—we do not believe that the articles included in Schedule 2, Part 5 of the Tariff Schedules (titled "Books, Pamphlets, and Other Printed and Manuscript Matter") could be mistakenly cleared as business records. Part 5 consists of such articles as prints, catalogs, newspapers and postage stamps. Many of these articles are free of duty, and the ones subject to the highest rates, globes, decalcomanias, postcards, greeting cards and calendars, clearly could not pass as "business records." Consequently, we do not believe the Manual Supplement provision endangers the revenue, or that the term "business records" requires clarification at this time. We will reconsider our position with respect to this issue if future circumstances so warrant.

While we have carefully and sympathetically considered the arguments you have presented, we find no basis for acceding to your request to withdraw and redraft the Manual Supplement. We will publish this letter in the Customs Bulletin, for the general information of interested parties.

Subject: Liquidation: ATA Carnets That Undervalue Commercial Samples for Security Purposes Violate 19 U.S.C. 1592 Rendering the Samples Unacceptable for Entry

Date: February 10, 1981
File: CO:R:E:C
652572 HL

District Director of Customs,
Los Angeles, California.

DEAR SIR: Your memorandum of January 16, 1981, forwards the petition of (CORPORATE NAME) a Swiss company seeking refund of $90,000, deposited to secure release of certain watches seized for violation of 19 U.S.C. 1592. A claim for monetary penalty was assessed pursuant to 19 U.S.C. 1592 for undervaluation of the watches which were temporarily entered into the United States on an A.T.A. carnet. An A.T.A. carnet serves simultaneously as a Customs entry document and as a Customs bond (19 CFR 114.3), and is acceptable for goods to be temporarily entered as commercial samples (19 CFR 114.22(a)(2)).

The record before us discloses no evidence of intent to defraud the revenue of the United States. However, the A.T.A. carnet values for the watches were intentionally reduced (pursuant to an industry practice) in order to minimize theft. The watches constituted a sample collection which was shipped around the world so that foreign orders could be placed with the petitioner's travelling sales representative. Following presentation to foreign buyers in the United States, the watches were to be exported.

It is our position that the practice of undervaluing merchandise covered by A.T.A. carnets for security purposes cannot be condoned. Inasmuch as an A.T.A. carnet serves as an entry document, the law requires that information provided thereon be correct (19 U.S.C. 1484). Furthermore, pursuant to Customs Regulations, if merchandise entered under a carnet has not been exported or destroyed within the bond period, liquidated damages under the bond are assessed in the amount of 110 percent of the estimated duties on the articles not exported or destroyed (19 CFR 10.39(d)(2)). Inasmuch as duties are generally calculated based upon the value of the merchandise, values provided upon entry in the A.T.A. carnet must be correct.

In view of the foregoing, A.T.A. carnets that undervalue commercial samples for security purposes should not be accepted.

The petitioner in this case was negligent in its failure to ascertain its obligations under Customs law. However, there is no loss of revenue for penalty purposes. Inasmuch as the record is devoid of any evidence of fraudulent intent, and in the absence of any prior violations, we remit the claim for monetary penalty to $250, an amount considered sufficient to impress upon petitioner the seriousness of its obligations. The remainder of the amounts deposited as penalties and withheld duties should be refunded to the petitioner.

Decisions of the United States Court of Customs and Patent Appeals

No. 80–40. UNITED STATES *v.* ELBE PRODUCTS CORP., C.A.D. 1267

1. CLASSIFICATION—FLEXIBLE NONWOVEN FABRICS.

Judgment of the Court of International Trade that imported rolls of flexible nonwoven fabrics are properly classifiable under item 771.42, TSUS, affirmed.

2. ID.—DEFINITION OF "ARTICLES."

In *United States* v. *Canadian Vinyl Industries, Inc.*, 64 CCPA 97, C.A.D. 1189, 555 F. 2d 806 (1977), this court held that imported rolls of fabric were "articles" within the meaning of Schedule 3, subpart 4c, headnote 1(vii).

3. ID.

We find no reason to depart from the construction of "articles" adopted in that case and applied by the court below.

4. ID.

The term "articles" in headnote 1(vii) must refer to both finished consumer goods and intermediate goods.

5. ID.

Because the essential character of Forrita 80 and Plantilla 80 is imparted by the plastic coating, the merchandise is properly classifiable under item 771.42, TSUS.

United States Court of Customs and Patent Appeals, July 16, 1981

Appeal from United States Court of International Trade, C.D. 4865

[Affirmed]

Steven P. Florsheim, Robert B. Silverman attorneys for appellee.

Thomas S. Martin, Acting Asst. Attorney General, *David M. Cohen*, Director, *Joseph I. Liebman*, Attorney in charge, *John J. Mahon*, attorneys for appellant.

[Oral argument on June 3, 1981 by *John J. Mahon* for appellant and *Steven P. Florsheim* for appellee.]

Before MARKEY, *Chief Judge*, RICH, BALDWIN, MILLER, and NIES, *Associate Judges*.

MARKEY, *Chief Judge*.

The Government appeals from the judgment of the United States

Court of International Trade [1] sustaining the claim of Elbe Products Corporation (Elbe) [1] that the imported rolls of flexible nonwoven fabrics are properly classifiable under item 771.42, Tariff Schedules of the United States (TSUS), and refusing classification under item 355.25, TSUS. We affirm.

BACKGROUND

The subject merchandise, imported by Elbe from Spain in November 1976, is described in entry papers as "Forrita 80" and "Plantilla 80" and consists of rolls of flexible nonwoven fabrics of man-made fibers coated or filled with a plastic binder and having a plastic coating on one surface. Forrita 80 and Plantilla 80 are "imitation" leathers manufactured principally for use as linings in footwear. When so used, the plastic coating is the only surface visible in the completed product.

Customs Service officials classified the merchandise under item 355.25, TSUS.[2] Elbe protested that classification and advanced a claim under item 771.42, TSUS.[3]

The Court of International Trade sustained Elbe's claim, holding that the merchandise is "almost wholly of" plastics within the meaning of item 771.42, TSUS (as the quoted term is defined in General Headnote 9(f)(iii)),[4] because the essential character of the merchandise, that is, its visual and tactile qualities simulating geniune leather, is imparted by the plastic coating. Accordingly, the court determined that the merchandise is excluded from classification in schedule 3, subpart 4C (which includes item 355.25, TSUS) by headnote 1(vii) to that subpart. That headnote excludes from classification in subpart 4C, "other articles specially provided for in schedule 7 or elsewhere." [5]

---

[1] The judgment of the United States Customs Court, now the United States Court of International Trade, is reported at —— Cust. Ct. ——, C.D. 4865, 497 F. Supp. 707 (1980).

[2] Item 355.25, TSUS provides:

	Webs, wadding, batting, and nonwoven fabrics, including felts and bonded fabrics, and articles not specially provided for of any one or combination of these products, all of the foregoing, of textile materials, whether or not coated or filled:	
	* * * * * *	
355.25	Of manmade fibers	12¢ per lb.+15% ad val.

[3] Item 771.42, TSUS provides:

	Film, strips, sheets, plates, slabs, blocks, filaments, rods, seamless tubing, and other profile shapes, all the foregoing wholly or almost wholly of rubber or plastics:	
	* * * * * *	
	Not of cellulosic plastics materials:	
	Film, strips, and sheets, all the foregoing which are flexible:	
771.42	Other	6% ad val.

[4] General Headnote 9 provides in pertinent part:

9. *Definitions.*—For the purposes of the schedules, unless the context otherwise requires—

* * * * * * *

(f) the term "of", "wholly of", "almost wholly of", "in part of" and "containing", when used between the description of an article and a material (e.g., "furniture *of* wood", "woven fabrics, *wholly of* cotton", etc.), have the following meanings:

* * * * * * *

(iii) "almost wholly of" means that the essential character of the article is imparted by the named material, notwithstanding the fact that significant quantities of some other material or materials may be present.

[5] Headnote 1(vii) provides:

1. The provisions of this subpart do not cover—

* * * * * * *

(vii) other articles specially provided for in schedule 7 or elsewhere.

ISSUE

Whether the trial court erred in holding the merchandise properly classifiable under item 771.42, TSUS.

OPINION

The Government maintains that the imported merchandise is not excluded from classification in schedule 3, subpart 4C by headnote 1(vii) because the merchandise is not an "article" within the meaning of that headnote. That term, says the Government, was intended to include only finished consumer goods and not intermediate manufactured products, such as Forrita 80 and Plantilla 80, as evidenced by the statute and its legislative history.

In support of that contention, the Government points to schedule 3, headnotes 2(a)(vi) and 5.[6] Taken collectively, those headnotes exclude certain "articles" made of fabric from the textile provisions of schedule 3 and provide that those "articles" shall not be regarded as textile materials but rather "as wholly of * * * plastics" provided that, as used in the article, plastic forms the outer surface of the article or the only exposed surface of the fabric.

Citing the legislative history contained in the House Report on the Tariff Schedules Technical Amendment Act of 1965, the Government says that the articles so excluded are limited to finished products which incorporate a coated fabric, of the type referred to in the legislative history, e.g., gloves, luggage, handbags, and do not include interim products such as the imported rolls of coated fabrics.[7] The Government says that because there is no contrary

---

[6] Those headnotes provide in pertinent part:

Headnote 2:

2. For the purposes of the tariff schedules—
(a) the term "textile materials" means—
(i) the fibers * * *,
(ii) the yarn intermediates and the yarns * * *,
(iii) the cordage * * *,
(iv) the fabrics - - -,
(v) braids, - - - -, and
(vi) except as provided by headnote 5, articles produced from any of the foregoing products.

Headnote 5:

5. [I]n determining the classification of any article which is wholly or in part of a fabric coated or filled, or laminated, with nontransparent rubber or plastics (which fabric is provided for in part 4C of this schedule), the fabric shall be regarded not as a textile material but as being wholly of rubber or plastics to the extent that (as used in the article) the nontransparent rubber or plastics forms either the outer surface of such article or the only exposed surface of such fabric.

[7] The Government quotes the following language from the House Report (all emphasis by the Government):

Textile fabrics which have been coated or filled or laminated with rubber or plastics are made * * * for a wide variety of uses. * * * These rubber- or plastic-covered fabrics are used in making *rainwear, hunting jackets, footwear, headwear, gloves, luggage, handbags, furniture, and other articles.*

* * * * * * * * *

Subsection (a) would amend the definition of "textile materials" in headnote 2(a) of schedule 3. * * * The proposed amendment takes into account the consideration mentioned above that the textile characteristics of these fabrics may be completely lost in the final product. For example, simulated leather suitcases and gloves made of a "supported" vinyl bear no outward resemblance to a textile product. Thus, the proposed amendment of headnote 2(a) would exclude such fabrics from the defined concept of "textile materials" and provide for their being regarded as wholly of rubber or plastics to the extent that *as used in the luggage, gloves, or other articles* made therefrom, nontransparent rubber or plastics form either the outer surface of the article or the only exposed surface of the fabric.

H.R. Rep. No. 342, 89th Cong., 1st Sess. 10-13 (1965).

indication in the statute, this interpretation is equally applicable to the term "articles" as used in subpart 4C, headnote 1(vii). That Congress intended that construction, says the Government, is buttressed by the superior headiug to item 355.25, TSUS [8] which says "whether or not coated or filled," making the presence of any plastic material irrelevant in determining whether a fabric is "of textile materials" and therefore classifiable thereunder. It is the Government's view that that language together with that of the headnotes evidences a congressional intent to distinguish in schedule 3 between basic textile materials and finished products made from such materials.

In response to the Government's contentions, Elbe cites *United States* v. *Canadian Vinyl Industries, Inc.*, 64 CCPA 97, C.A.D. 1189, 555 F. 2d 806 (1977), as stare decisis.

Canadian Vinyl involved the proper tariff classification of an imitation patent leather manufactured by coating plastic onto a nylon fabric. In affirming the decision and judgment of the lower court, [2] this court held that the imported rolls of fabric were "articles" within the meaning of headnote 1(vii) and properly classifiable under item 771.40, TSUS as strips or sheets in imitation of patent leather. In rejecting a restrictive interpretation of the term "articles" as used in the headnote, this court said:

> [W]e find no basis in the statute or even in the cited legislative history to read the word "article" in such restrictive manner. Although finished products such as gloves and luggage are discussed in the legislative history as examples of "articles," there is no narrowing definition given therein for the term. In our view the films, strips, sheets, etc. enumerated in the superior heading to item 771.40 are all articles which are excludable from schedule 3 by virtue of headnote 1(vii) to part 4C of schedule 3, provided they meet the other classification requirements in issue.

Id. at 105–106, 555 F. 2d at 811.

Contrary to the restricted and narrow meaning that the Government would attribute to the term "articles", this court in *Canadian Vinyl* noted various portions of the legislative history establishing that Congress intended no distinction for classification purposes between finished and partly finished articles. Pointing to one such portion, this court said:

> This view * * * is reinforced by the Tariff Classification Study, Submitting Report (1960) (TCS), Schedule 7, p. 440, which states:
>
> > [T]he proposed provisions of part 12 [of schedule 7] do not distinguish between products on the basis of whether they are or are not made into finished or partly finished articles.

---

[8] *See* note 2, supra.

> Objective distinctions based on specified dimensions have been substituted.

Id. at 106, 555 F. 2d at 811.

Though the Government urges that the *Canadian Vinyl* decision is in error and should not be applied here, **[3]** we find no reason to depart from the construction of "articles" adopted in that case and applied by the court below.

The Government cites various provisions in schedule 3, which it says support its interpretation of "articles", but that term as used in various other schedule 3 provisions is clearly not restricted in the manner the Government claims. For example, subpart 4C, headnote 2(a) reads in part:

> 2. For the purposes of the tariff schedules—
> (a) the term "coated or filled", as used with reference to textile fabrics and other textile articles, means that any such fabric or other article has been coated or filled . . . .

The phrase "textile fabrics and other textile articles" clearly indicates that "articles" refers here, *inter alia*, to textile fabrics.

A similar conclusion is compelled by the language of schedule 3, subpart 4C, headnote 1, which excludes from classification in that subpart, various named items (headnote 1(i)–(vi)) and "other articles specially provided for in schedule 7 or elsewhere" (headnote 1(vii)).[9] Because those named items include not only finished products but also "intermediate" products, e.g., hair felt, cloth-lined or reinforced paper, **[4]** the term "articles" in headnote 1(vii) must refer to both finished consumer goods and intermediate goods.

Moreover, the following language of headnote 5, a headnote the Government cites in support of its position, supports the exclusion from schedule 3, of a coated, filled or laminated fabric per se provided the recited condition is met:

> [T]he fabric shall be regarded not as a textile material but as being wholly of * * * plastics to the extent that (as used in the article) the * * * plastics forms either the outer strface of such article or the only exposed surface of such fabric.

Because we find that the term "articles" as used in headnote 1(vii) may properly encompass merchandise such as Forrita 80 and Plantilla 80, the appropriate inquiry is whether the Court of

---

[9] Headnote 1 provides in pertinent part:
1. The provisions of this subpart do not cover—
(i) any of the products described in part 5, 6, or 7A of this schedule;
(ii) cloth-lined or reinforced paper * * *;
(iii) cloths coated with abrasives * * *;
(iv) fish landing nets * * *;
(v) laminated or reinforced plastics * * *;
(vi) hair felt, and articles thereof * * *; or
(vii) other articles specially provided for in schedule 7 or elsewhere.

International Trade correctly held that merchandise classifiable under item 771.42, TSUS.

That court found that the visual and tactile qualities of the plastic coating impart to the merchandise its ability to serve as an imitation leather and thereby provide its essential character. Applying headnote 9(f)(iii),[10] the court therefore concluded that the merchandise is "almost wholly of" plastics within the meaning of item 771.42.

The Government says that headnote 9(f) should not have been applied because that headnote is not applicable to coated or filled textile materials, and that schedule 3, headnote 4(b) should be applied instead. Application of headnote 4(b) would, in the Government's view, preclude consideration of the plastic coating and compel classification of the merchandise under item 355.25, TSUS as an article "of manmade fibers" regardless of the relative value of the plastics component.

The Government's contention is without merit. That headnote 4(b) does not mandate disregard of the coating or filling substance in the manner propounded by the Government was made clear by the Court of International Trade in *Marshall Co.* v. *United States*, 67 Cust. Ct. 316, C.D. 4291, 334 F. Supp. 643 (1971). In considering the proper classification of imported rubber-coated rayon fabric, the court said:

> The components of the merchandise are rayon fabric and rubber* * *. We are in accord that it is in chief value of man-made fiber . . . on the evidence presented* * *. We do not agree * * * that it can be considered wholly of man-made fibers on the ground that under headnote 4(b) * * * the substances used for laminating, coating or filling are to be disregarded. Headnote 4(b) is directed toward the determination of the component fiber of chief value and is applicable where it is necessary to decide whether vegetable fiber, wool, silk, or manmade fiber is the fiber in chief value. In making that determination, the coating, filling, or laminating substance is to be disregarded. The headnote is no indication that it should be disregarded for other purposes. *Braircliff Clothes, Ltd.* v. *United States*, 55 Cust. Ct. 227, C.D. 4194 (1971).

Id. at 323, 334 F. Supp. at 648.

Because the question of component fiber in chief value is not at issue in this case, application of headnote 4(b) is inappropriate.

The Government says that even if general headnote 9(f) is applicable, the subject merchandise is not "almost wholly of" plastics because the non-woven fabric substrate and its plastic coating are equally essential to the usefulness of the product. The Government

---

[10] *See* note 4, supra.

says that neither component, each being equally essential, can provide the essential character of the complete article.

There is ample evidence of record to support the trial court's holding that the plastic coating supplies the essential character of the merchandise. It is undisputed that the foremost characteristic of Forrita 80 and Plantilla 80, the ability to simulate the appearance of leather, is solely attributable to the plastic coating. Moreover, in serving as linings in footwear, only the plastic surfaces of Forrita 80 and Plantilla 80 are exposed.

The evidence further establishes that the plastic coating simulates the feel of leather; that it provides resistance to abrasions when used for inner shoe linings; and that customers within the commercial shoe industry, who are interested in obtaining imitation leathers, give little or no attention to the fabric substrate.

Though it is undisputed that the nonwoven fabric substrate contributes desirable properties to the merchandise, there is no evidence that it alters the essential character of the merchandise or that it is indispensable. On the contrary, though some type of substrate is required, a nonwoven fabric need not be used. There is evidence that woven fabrics and paper are satisfactory substitutes.

CONCLUSION

Schedule 3, subpart 4C, headnote 1(vii) excludes from classification in that subpart "articles specially provided for in schedule 7 or elsewhere". Those "articles" are not restricted to finished consumer goods and may include intermediate products.

[5] Because the essential character of Forrita 80 and Plantilla 80 is imparted by the plastic coating, the merchandise is properly classifiable under item 771.42, TSUS. As such, it is excluded from schedule 3, subpart 4C by headnote 1(vii) to that subpart. Accordingly, the judgment of the Court of International Trade is *affirmed*.

MILLER, *Judge*, dissenting.

I would reverse the judgment below based on the views expressed in my dissenting opinion in *United States* v. *Canadian Vinyl Industries, Inc.*, 64 CCPA 97, C.A.D. 1189, 555 F. 2d 806 (1977).

United States Court of International Trade

One Federal Plaza
New York, N.Y. 10007

Chief Judge

Edward D. Re

Judges

Paul P. Rao
Morgan Ford
Scovel Richardson
Frederick Landis
James L. Watson
Herbert N. Maletz
Bernard Newman
Nils A. Boe

Senior Judge

Samuel M. Rosenstein

Clerk

Joseph E. Lombardi

Decisions of the United States Court of International Trade

(Slip Op. 81–58)

ZENITH RADIO CORPORATION, PLAINTIFF *v.* UNITED STATES, DEFENDANT

Court No. 80–5–00861

Memorandum and Order

(Dated July 6, 1981)

Frederick L. Ikenson and *Philip J. Curtis* for the plaintiff.

Stuart E. Schiffer, Acting Assistant Attorney General (*David M. Cohen*, Director, Commercial Litigation Branch, on the brief), for the defendant.

MALETZ, *Judge:* This is a motion by defendant to require plaintiff to post security pursuant to rule 65(c) of this court.[1]

The background is this. On March 10, 1971, the Secretary of the Treasury issued a finding of dumping of television sets from Japan, thereby making such sets subject to antidumping duties. T.D. 71-76, 36 FR 4597 (1971). From the date of this finding through 1979 most of these duties were not collected, and on April 28, 1980, the Secretary of Commerce settled for $77 million all Government claims for antidumping duties arising from entries of the sets from July 1, 1973 to March 31, 1979. Plaintiff, a domestic manufacturer of television sets, then brought this action challenging the lawfulness of the settlement. On December 9, 1980, the court concluded that plaintiff had "made out a substantial case on the merits * * * that Government officials in negotiating and executing the settlement agreements acted arbitrarily and in bad faith" and preliminarily enjoined implementation of the settlement. *Zenith Radio Corp.* v. *United States*, 1 CIT —, 505 F. Supp. 216, 219 (1980).

It is not disputed that the injunction here delays, at least temporarily, the Government's receipt and use of $77 million in antidumping duties. On this basis, defendant has requested that bond be set at $11.5 million, an amount equivalent to 15 percent interest, for one year, on $77 million. Plaintiff, on the other hand, argues that bond is not required because the injunction was issued in aid of the court's jurisdiction and the litigation is in the public interest.[2]

It is established that 28 U.S.C. §1651—the All Writs Act—authorizes federal courts to issue injunctions needed to prevent a controversy from becoming moot in order to preserve their jurisdiction over a case. As the Supreme Court has stated, federal courts possess "judicial power to preserve * * * jurisdiction or maintain the *status quo* by injunction pending review of an agency's action." *F.T.C.* v. *Dean Foods Co.*, 384 U.S. 597, 604 (1966). Thus this power may be appropriately exercised where "an administrative agency has committed errors of law * * * [but] judicial review would be an idle ceremony if the situation were irreparably changed before the [judicial] correction could be made." *Scripps-Howard Radio, Inc.* v.

[1] Rule 65(c) of this court which is identical to rule 65(c) of the Federal Rules of Civil Procedure provides to the extent relevant:

> No restraining order or preliminary injunction shall issue except upon the giving of security by the applicant, in such sum as the court deems proper, for the payment of such costs and damages as may be incurred or suffered by any party who is found to have been wrongfully enjoined or restrained * * *.

[2] It is to be noted that although the settlement has been enjoined by this court since December 9, 1980, defendant first moved for the posting of security on June 9, 1981. In addition, this same settlement has also been enjoined by the Court of Appeals for the District of Columbia since May 8, 1980. See *COMPACT* v. *Miller*, C.A.D.C. No. 79-1948. Defendant has made no motion for security in that court.

F.C.C., 316 U.S. 4, 10 (1942). See also *United States* v. *Western Pa. Sand & Gravel Ass'n*, 114 F. Supp. 158 (W.D. Pa. 1953). And where a federal court issues a preliminary injunction in aid of and in preservation of its jurisdiction, no security need be required pursuant to rule 65(c). See, e.g., *Magidson* v. *Duggan*, 180 F. 2d 473, 479 (8th Cir. 1950), *cert. denied*, 339 U.S. 965 (1950); *Doyne* v. *Saettele*, 112 F. 2d 155, 162 (8th Cir. 1940); *Guaranty Trust Co.* v. *Broadway & Seventh Ave. R. Co.*, 43 F. 2d 130 (S.D.N.Y. 1930); *Bivens* v. *Board of Public Education*, 284 F. Supp. 888, 899 (M.D. Ga. 1967).

Here, in determining that a preliminary injunction should issue, this court concluded that in the absence of such relief "plaintiff stands to be irreparably injured * * * [by losing] its right to judicial review." *Zenith Radio Corp.*, *supra*, 505 F. Supp. at 219–20. Further, this court emphasized that "the mooting of this controversy, which is what would result in the absence of an injunction, would constitute a disservice to the public interest." *Id.* at 220. A similar situation existed in *Powelton Civic Home Own. Ass'n* v. *Dept. of H.U.D.*, 284 F. Supp. 809 (E.D. Pa. 1968), where the court "granted the preliminary injunction because disbursement of * * * [certain] funds would have rendered the controverted issues moot." *Id.* at 839. In that case, the court denied a motion for $20 million in security, stating that "FR Civ. P. 65(c) is not applicable when the preliminary injunction has been issued in order to preserve the court's * * * jurisdiction." *Id.* at 839. In this case, the preliminary injunction serves the same purpose and security is therefore not required. *City of Hartford* v. *Hills*, 408 F. Supp. 879, 887 (D. Conn. 1975); *Grenchik* v. *Mandel*, 373 F. Supp. 1298, 1302 (D. Md. 1973).

But even if this injunction were not in aid of the court's jurisdiction, the court still has discretion as to the amount of security to require of plaintiff. See, e.g., *Stockslager* v. *Carroll Elec. Cooperative Corp.*, 528 F. 2d 949, 951 (8th Cir. 1976); *Continental Oil Company* v. *Frontier Refining Company*, 338 F. 2d 780, 782 (10th Cir. 1964); *Ferguson* v. *Tabah*, 288 F. 2d 665, 675 (2d Cir. 1961). And it is within the court's discretion to set the amount of security at a level below the actual potential costs and damages to defendant, *Base* v. *Richardson*, 338 F. Supp. 478, 491 (S.D.N.Y. 1971), or even at a nominal level. *West Virginia Highlands Conserv.* v. *Island Creek Coal Co.*, 441 F. 2d 232, 236 (4th Cir. 1971); *Natural Resources Defense Council, Inc.* v. *Morton*, 337 F. Supp. 167 (D.C.D.C. 1971), *aff'd* on other grounds, 458 F. 2d 827 (D.C. Cir. 1972). Indeed, in *Urbain* v. *Knapp Brothers Manufacturing Company*, 217 F. 2d 810, 815–16 (6th Cir. 1954), *cert. denied*, 349 U.S. 930 (1955), it was recognized that since the amount of security to be required is within the discretion of the court, the question of whether or not to require any security in the first instance is also

within the court's discretion. See also *Scherr* v. *Volpe*, 466 F. 2d 1027, 1035 (7th Cir. 1972); *Corrigan Dispatch Co.* v. *Casa Guzman, S.A.*, 569 F. 2d 300, 303 (5th Cir. 1978); *International Control Corp.* v. *Vesco*, 490 F. 2d 1334, 1356 (2d Cir. 1974), *cert. denied*, 417 U.S. 932 (1974). Thus, "it is not uncommon in public interest actions * * * to require only nominal security under Rule 65(c)." *State of Ala. ex rel Baxley* v. *Corps of Engineers*, 411 F. Supp. 1261, 1275 (N.D. Ala. 1976). See also *Powelton Civic Home Own. Ass'n* v. *Dept. of H.U.D.*, *supra*, at 840–41; *Bass* v. *Richardson*, *supra*, at 491; *Natural Resources Defense Council, Inc.* v. *Morton*, *supra*, at 169.

As was stated in *State of Ala. ex rel Baxley* v. *Corps of Engineers*, *supra*, at 1276:

> This court is simply unwilling to close the courthouse door in public interest litigation by imposing a burdensome security requirement on plaintiffs who otherwise have standing to review [the challenged] government action. . . . Accordingly, the injunction to be issued will be conditioned upon the giving of security in the amount of one dollar.

Similarly, in *City of Atlanta* v. *Metropolitan Atlanta Rapid Transit*, 636 F. 2d 1084, 1094 (5th Cir. 1981), the court stated that:

> [The] parties were seeking to protect citizens in the Atlanta area from perceived adverse economic and social consequences. In a real sense, therefore, plaintiffs were engaged in public interest litigation, an area in which the courts have recognized an exception to the Rule 65 security requirement.

Similar considerations are applicable here since plaintiff alleges that defendant failed to enforce the antidumping laws to the detriment of an entire industry. Admittedly, plaintiff is not a "public interest" organization or an indigent party. Nor does plaintiff represent other United States television manufacturers. Yet should plaintiff prevail upon the merits the result would benefit not just plaintiff but other United States manufacturers as well. *Zenith Radio Corp.* at 219. From a broader standpoint, the antidumping laws are designed to protect American industry from unfair competition. Necessarily, the public has an interest in the faithful enforcement of those laws. *Zenith Radio Corp.* at 220.

Moreover, prohibitive security should not be required here because Congress intended that the Government's administration of the antidumping laws should be subject to judicial review initiated by domestic manufacturers. See *Zenith Radio Corp.* at 219. A like consideration was recognized in *Natural Resources Defense Council, Inc.* v. *Morton*, *supra*, 337 F. Supp. at 168–69, where the court observed:

> Congress has indicated that private environmental organizations should assist in enforcing NEPA * * *. The requirement

> of more than a nominal amount as security would stifle the intent of the Act * * *.

See also *Wisconsin Heritages, Inc.* v. *Harris*, 476 F. Supp. 300, 302 (E.D. Wis. 1979); *Bass* v. *Richardson*, *supra*, at 491.

Here, a requirement of $11.5 million in security would not only constitute a severe burden upon plaintiff's efforts to litigate the lawfulness of the challenged settlement, it might indeed force plaintiff out of court.

Given all the circumstances here, the court is of the view that pursuant to rule 65(c), security in the amount of $250,000 should be required. The court therefore orders that within ten days from the date of this order plaintiff shall post security or bond in the amount of $250,000 to indemnify the defendant should it ultimately be determined that the defendant was wrongfully enjoined or restrained by the preliminary injunction issued by this court on December 9, 1980.

(Slip Op. 81–59)

PPG INDUSTRIES, INC., PLAINTIFF *v.* UNITED STATES: MALCOLM T. BALDRIGE, SECRETARY OF COMMERCE; LIONEL H. OLMER, UNDER SECRETARY FOR INTERNATIONAL TRADE, DEPARTMENT OF COMMERCE, DEFENDANTS

Court No. 81–6–00733

CLEAR SHEET GLASS FROM TAIWAN

[Plaintiff's motion for a preliminary injunction denied; plaintiff's motion to shorten defendants' time to reply to complaint denied; defendants' cross-motion to dismiss continued.]

(Dated July 6, 1981)

Eugene L. Stewart (*Terence P. Stewart* and *Jeffrey S. Beckington* on the brief) for the plaintiff.

Stuart E. Schiffer, Acting Assistant Attorney General; *David M. Cohen*, Director, Commercial Litigation Branch (*Francis J. Sailer* on the brief), for the defendants.

LANDIS, *Judge:* In this action plaintiff has filed a summons and complaint, motion for a preliminary injunction, and a proposed order to show cause. Plaintiff seeks to preliminarily enjoin the Department of Commerce from reaching and publishing a final determination based upon the annual review sanctioned by section 751 of the Tariff Act of 1930, as amended (19 U.S.C. §1675), of an

antidumping finding on clear sheet glass from Taiwan. Additionally, plaintiff moves to shorten defendants' time to answer the complaint to ten (10) days after service of the summons.

Plaintiff stresses the urgency of this matter to be the fact that at any time on or after June 20, 1981 defendants can issue a final determination of the annual review of the antidumping order originally published in 1971 (Treasury Decision 71-226, 36 Fed. Reg. 16508). Plaintiff claims it is being denied its right to participate meaningfully in the section 751 review proceedings in that it has been denied a requested discretionary discovery conference and the opportunity to request disclosure of confidential documents pursuant to a protective order.

In denying plaintiff's written request for a discretionary discovery conference before the Commerce Department, said Department stated that there were no facts to discover for the reason that for the period under review there have been no known shipments of the glass to the United States.

Plaintiff maintains that there should be an independent evaluation by Commerce's International Trade Administration (ITA) and that the ITA should not rely upon the Treasury Department's calculations and figures but should make its own assessment even though such assessment would be based upon information covering the period from 1974 to 1976, the last know shipment dates.

Defendants respond to plaintiff's motion for a preliminary injunction opposing it on the grounds that it does not meet the requisite threshold requirements necessary for injunctive relief. Defendants also cross-move to dismiss the action on the grounds that it fails to state a cause of action.

There is currently no temporary restraining order in effect nor has counsel for plaintiff petitioned the court for such relief in this action.

Interim injunctive relief is an extraordinary and drastic remedy which should not be routinely granted unless the movant, by a clear showing, carries the burden of persuasion. *Medical Society of the State of New York* v. *Toia*, 560 F. 2d 535 (2d Cir. 1977); Wright & Miller, *Federal Practice and Procedure, Civil* § 2948 (1973). Only a viable threat of serious harm which cannot be undone authorizes exercise of a court's equitable power to enjoin before the merits are fully determined. *S. J. Stile Associates Ltd., et al.* v. *Dennis Snyder, et al.* 68 CCPA —, C.A.D. 1261, — F. 2d — (1981). A preliminary injunction will not issue simply to prevent a mere possibility of injury, even where prospective injury is great. As presently existing, actual threat must be shown. *State of New York* v. *Nuclear Regulatory Com-*

mission, 550 F. 2d 745 (2d Cir. 1977); Wright & Miller, *supra*, § 2948.

Generally, four conditions must be met before an injunction is granted. There must be a threat of immediate irreparable harm; a showing that the public interest would be better served by issuing than by denying the injunction; that there is a likelihood of success on the merits; and that the balance of hardship on the parties favored the party seeking injunctive relief. *S. J. Stile Associates Ltd., et al.* v. *Dennis Snyder, et al., supra; American Air Parcel Forwarding Company, Ltd., A Hong Kong Corporation* v. *United States*, 1 CIT ——, Slip Op. 81–45 (May 15, 1981); *Asher* v. *Laird*, 475 F. 2d 360 (D.C. Cir. 1973).

In examining these four conditions it is generally understood that the basis of injunctive relief in federal courts has always been irreparable harm and inadequacy of legal remedies. *Rondeau* v. *Mosinee Paper Corp.*, 422 U.S. 49 (1975); *Sampson* v. *Murray*, 415 U.S. 61 (1974); *Virginia Petroleum Jobbers Ass'n* v. *FPC* 259 F. 2d 921 (D.C. Cir. 1958).

In the present action plaintiff, in effect, seeks a mandatory injunction whereby the court should issue forthwith an order compelling the ITA to grant plaintiff a disclosure conference before it. However, plaintiff has demonstrated no actual or threatened injury warranting the imposition of an injunction. Apparently there has been no importation of sheet glass from Taiwan for several years nor is there any evidence to show that importation is about to occur and that the existing antidumping duty order will not adequately protect the domestic industry. Again, only a viable threat of serious harm which cannot be undone authorizes exercise of a court's equitable power. *S. J. Stile Associates, Ltd., et al.* v. *Dennis Snyder, et al., supra.* Since this is an application for a mandatory injunction movant is held to an even more stringent burden of proof than under the normal prohibitive type injunction. Wright & Miller, *supra*, § 2948 at 446. Plaintiff has fallen short of meeting either standard of proof.

Plaintiff has failed to meet the most important criteria for obtaining an injunction. It has demonstrated no irreparable injury. In view of this fact it would be an abuse of this Court's discretion to grant a preliminary injunction.

Accordingly, plaintiff's motion for a preliminary injunction is denied as is plaintiff's motion to shorten defendants' time to answer which is now moot.

As the equitable matter has been determined, the complaint and cross-motion to dismiss the same are hereby continued and the action is referred to the Chief Judge for assignment pursuant to rules 78(b) and 78(c)(4).

(Slip Op. 81–60)

BELWITH INTERNATIONAL, LTD., PLAINTIFF *v.* UNITED STATES, DEFENDANT

Motion to Vacate Judgment

Court No. 78–5–00772

[Plaintiff's motion to vacate judgment is denied.]

(Dated July 6, 1981)

Stanley R. Gustafson for the plaintiff.

Stuart E. Schiffer, Acting Assistant Attorney General; *Joseph I. Liebman*, Attorney in Charge, International Trade Field Office, Commercial Litigation Branch (*Robert H. White* on the brief), for the defendant.

LANDIS, *Judge:* In this action plaintiff moves to vacate a previous order and judgment of this Court which dismissed the action for failure to prosecute pursuant to Rule 86.

This action was dismissed by the Clerk on December 10, 1980. Plaintiff claims, *inter alia*, that he did not receive notice of the dismissal due to the fact that he changed office addresses and, further, that he had an agreement with the Attorney General's International Trade Field Office for an extension of time to enable the Attorney General to review the file in preparation for trial. Plaintiff further alleges that discovery has been completed.

The jurisdictional provision governing retrials and rehearings, 28 U.S.C. § 2646, is quite clear in its terms.

> § 2646 RETRIAL OR REHEARING.
>
> After the Court of International Trade has rendered a judgment or order, the court may, upon the motion of a party or upon its own motion, grant a retrial or rehearing, as the case may be. A motion of a party or the court *shall be made not later than thirty days* after the date of entry of the judgment or order. [Emphasis supplied.]

Rule 60(b) of this Court which governs relief from judgments or orders also makes it quite clear that a motion seeking relief must be made within thirty (30) days after the date of entry of the judgment or order.[1]

Plaintiff's motion is brought approximately five (5) months from the date of entry of the order of dismissal. As such, it is untimely and

[1] Notably, Rule 60(b) of this Court differs from Rule 60(b) of the Federal Rules of Civil Procedure upon which this Court's rules were modeled. Under the Federal Rules, a motion brought pursuant to 60(b) for relief based upon enumerated categories 1, 2 and 3 under 60(b) must be made within one year from date of said order or judgment. Relief must be sought under the remaining categories *within a reasonable time*. This Court's rule is much more stringent as to the time within which relief must be sought.

jurisdictionally defective and, therefore, must be denied. It has been held that although a party has mistakenly or inadvertently failed to act in a timely fashion and did not realize the consequence of its action that it cannot be granted an extension of time within which to act even though it may have a meritorious case. *United States* v. *Torch Manufacturing Co., Inc.*, 62 CCPA 41, C.A.D. 1143, 509 F. 2d 1187 (1975); *R. W. Smith & Co., Inc.* v. *United States*, 76 Cust. Ct. 253, C.D. 4663, 415 F. Supp. 895 (1976).

The denial of this motion should not be construed as foreclosing plaintiff from bringing an independent action, based in equity to relieve itself from the judgment of dismissal. Rule 60(b) specifically states:

> This rule does not limit the power of the court to entertain an independent action to relieve a party from a judgment, order, or proceeding, or to grant relief to a defendant not actually personally notified as provided in 28 U.S.C. § 1655, or to set aside a judgment for fraud upon the court. The procedure for obtaining any relief from a judgment shall be by motion as prescribed in these rules or by an independent action.

It cannot be too strongly emphasized that this Court still adheres to the strict jurisdictionally based rulings enunciated in *United States* v. *Torch Manufacturing Co., Inc., supra*, and *R. W. Smith & Co., Inc.* v. *United States, supra*. However, with the passage of the Customs Courts Act of 1980 this Court became imbued with full equitable powers (28 U.S.C. § 1585) and the right to grant related relief (28 U.S.C. § 2643(c)(1)) with the concomitant result of new legislation and new rules designed to enable this Court to render full relief when a matter is properly brought before it. Rule 60(b) is one such change and the independent equitable action theory thereunder should not be allayed by case law decided prior to the enactment of the new Customs Courts Act.

Accordingly, plaintiff's motion is denied without prejudice to commencement of an appropriate independent action seeking similar relief.

(Slip Op. 81-61)

EXPORT-IMPORT SERVICES, INC., A/C PROMOTIONS INTERNATIONAL, PLAINTIFF *v.* UNITED STATES, DEFENDANT

Court No. 79-2-00256

Untimely Protest

[Defendant's motion to dismiss granted; plaintiff's cross-motion denied; action is dismissed.]

(Dated July 8, 1981)

Serko & Simon (*Margaret H. Sachter* on the brief) for the plaintiff.

Stuart E. Schiffer, Acting Assistant Attorney General; *Joseph I. Liebman*, Attorney in Charge, International Trade Field Office, Commercial Litigation Branch (*Susan Handler-Menahem* and *Jerry P. Wiskin* on the briefs), for the defendant.

LANDIS, *Judge:* Defendant moves pursuant to Rule 12 for an order dismissing this action for lack of jurisdiction. Plaintiff opposes and cross-moves for an order granting leave to amend its summons and complaint to clarify the inclusion of the classification issue of its original protest.

The evidence record indicates that on May 16, 1975 plaintiff filed protest Nos. 1001–5–007290 and 1001–5–007291 against the classification of miniature surgical tools in entries 281072 and 314208 respectively. On June 26, 1975 attorneys for plaintiff filed protest No. 1001–5–009628 again contesting the classification of miniature surgical tools in the above entry numbers. On November 19, 1976 the three protests were purportedly denied. For the purposes of this action only protest No. 1001–5–009628 (filed June 26, 1975 by attorneys for plaintiff) appears relevant to plaintiff's case.

On August 4, 1977, eight and one-half (8½) months after the purported denial of the protest, attorneys for plaintiff sent a letter to the Deputy Assistant Regional Commissioner of Customs Bernard Klein. In this letter it is claimed that the November 19, 1976 denial was not an effective denial because the document received by plaintiff notifying it of the denial "* * * was ambiguous, confusing, unclear, and indefinite, compounded by carbon smudges and meaningless words written on different places of the document." Plaintiff's counsel requested that Customs issue a valid corrected denial dated as of the date of the corrected denial so that counsel could file a summons in this case. At that time counsel apparently realized that the 180-day period in which to file a summons from the denial date of the protest (28 U.S.C. 2631 (1976)) [1] had expired. The letter also stated that two staff members of counsel's firm had consulted with Bernard Klein and with Roy K. Dewing, Chief, Residual Liquidation & Drawback Branch, and were advised by both officials that the document in issue represented a proper denial of the claim stated in the protest.

On February 21, 1978, the New York Regional Commissioner of Customs responded to counsel's letter of August 4, 1977 stating that the protest denial was legally sufficient and adding that if counsel wished to discuss this decision with the Regional Counsel he should

[1] Now 28 U.S.C 2636.

make an appointment directly with that office. This meeting was arranged and held on May 12, 1978.

On May, 22, 1978 plaintiff filed protest No. 1001–8–006454 against the decision of the Regional Commissioner incorporated in the letter dated February 21, 1978. In a letter dated July 11, 1978, Harvey B. Fox, Director, Entry Procedures and Penalties Division, directed the New York Regional Commissioner to deny this protest in all respects which he subsequently did on August 25, 1978. On February 7, 1979, plaintiff filed a summons against the denial of this latest protest (No. 1001–8–006454).

The government mounts a threefold attack on the court's lack of jurisdiction. First, the government claims that the protest which is the subject of this action (No. 1001–8–006454) does not contest the denial of a protestable decision enumerated in 19 U.S.C. 1514. Second, that even if the original protest was not properly denied on November 19, 1976, that it was denied by the Regional Commissioner of Customs' letter dated February 21, 1978. Since the summons was filed on February 7, 1979, the action is untimely because it was commenced more than 180 days from the denial of the protest. Third, that plaintiff's letter dated August 4, 1977 itself constituted a protest, and that said protest was subsequently denied by the Regional Commissioner by letter dated February 21, 1978. Again the government argues that the action has been untimely commenced because it was filed more than 180 days after this denial.

The court agrees with defendant that plaintiff's action is untimely. While the copy of the original denial dated November 19, 1976 is quite slipshod in physical appearance, it nonetheless sufficiently conveys the impression that the protest was denied. The word "denied" is clearly written on it and although one signature of an import specialist is crossed out and marked void another signature does appear. Although the word "denied" and the second signature appear not to be in their proper place on the form, they are not sufficiently far afield as to make them meaningless. There is no indication that the protest was granted in any manner. All indications lead to the conclusion that it was denied.

Plaintiff fails to state or explain why it remained silent for more than eight (8) months after receiving the alleged ambiguous decision from Customs. Indeed, upon receipt of this notification plaintiff had a duty to inquire further. In fact, plaintiff did inquire further (at least according to its own letter dated August 4, 1977) and two members of counsel's staff were advised that the protest had been denied. However, plaintiff took no action other than write the August 4th letter.

The Court need not pass upon plaintiff's further arguments. Suffice it to say that the Court views plaintiff's myriad of letters and inquiries

as a mere "bootstrapping" attempt to circumvent the 180 day statute of limitations with which it initially failed to comply.

Since the November 19, 1976 denial is deemed a valid denial, the protest and denial that is the subject matter of this action is redundant and does not constitute a protestable decision enumerated under 19 U.S.C. 1514(a) (1976) and, as such, is not subject to judicial review pursuant to 28 U.S.C. 2631 (1976).

Plaintiff also moves to amend its summons and complaint "for clarification of the inclusion of the classification issue of its original protest." Since the protest here has been held not judicially reviewable because it does not constitute a protestable decision and since the time to seek judicial review of the original protest has long since run the Court fails to perceive what such amendment would accomplish.

Accordingly, it is hereby

Ordered, That defendant's motion be, and hereby is, granted; and it is further

Ordered, That plaintiff's cross-motion be, and hereby is denied; and it is further

Ordered, That this action be, and hereby is, dismissed.

(Slip Op. 81-62)

ATLANTIC SUGAR, LTD., AND REDPATH SUGARS, LTD., PLAINTIFFS *v.* UNITED STATES, DEFENDANT, AMSTAR CORPORATION, PARTY-IN-INTEREST

Court No. 80-5-00754

Memorandum and Order

(Dated July 8, 1981)

Rogers & Wells (*Robert V. McIntyre* and *George C. Smith* on the brief) for the plaintiffs.

Stuart E. Schiffer, Acting Assistant Attorney General; *David M. Cohen*, Commercial Litigation Branch (*Francis J. Sailor* on the brief) for the defendant.

Baker & McKenzie (*Thomas P. Ondeck* on the brief) and Sullivan & Cromwell (*James H. Carter* on the brief) for the Party-in-Interest.

WATSON, *Judge:* This is an action under Section 516A (a) (2) of the Tariff Act of 1930, (19 U.S.C. § 1516a (a) (2)). It was brought by Atlantic Sugar, Ltd. and Redpath Sugars, Ltd. for judicial review of a determination by the International Trade Commission (ITC) that the importation of refined sugar from Canada (previously found

to have been sold here at less than fair value during the period of October 1, 1978 through March 31, 1979) was causing material injury to an industry in the United States.[1] The result of that determination was the issuance of a final antidumping duty order. This judicial review is for the purpose of deciding whether or not the determination was supported by substantial evidence and made in accordance with the law. 19 U.S.C. § 1516a (b) (1) (B).

The matter is now before the Court following motions by the plaintiffs and the government under rule 56.1, which is the Court's analogue for a motion for summary judgment when the review is to be based solely upon the administrative record. Amstar, the intervenor, is the domestic sugar producer whose petition initiated the investigation which resulted in the determination of material injury. It has participated in the briefing of the motion and the oral argument which ensued.

The case lends itself to discussion in two parts. In the first part are those issues which relate to the consequences of recently discovered errors connected to two of the findings made by the ITC. These were the finding that a regional industry existed and the finding that it was the producers of all, or almost all, of the production in the region who suffered material injury.

In the second part are those issues raised in claims made by plaintiffs, that various findings were not supported by substantial evidence or were otherwise not in conformity with the law.

I

The statutory guidelines for the determination of material injury in this antidumping investigation are contained in Section 771 of the Tariff Act of 1930, as added by the Trade Agreements Act of 1979 (19 U.S.C. § 1677). The first dispute centers on the finding by the ITC that the sugar producers of an eleven-state region of the Northeast United States should be treated as a separate industry. The relevant statutory language is found at 19 U.S.C. § 1677 (4) (C) and reads as follows:

> *Regional industries.* In appropriate circumstances, the United States, for a particular product market, may be divided into two or more markets and the producers within each market may be treated as if they were a separate industry if—
>
> (i) the producers within such market sell all or almost all of their production of the like product in question in that market, and

---

[1] *Sugars And Sirups from Canada*, Inv. No. 731-TA-3 (Final), USITC Pub. No. 1047 (March, 1980)

(ii) the demand in that market is not supplied, to any substantial degree, by producers of the product in question located elsewhere in the United States.

A serious question has arisen with respect to the second of these two explicitly stated conditions. In its determination, the ITC stated that "[o]nly about 5.5 percent of the sales of producers located in states outside the region were to customers within the region." It further stated that it considered this amount to be "insubstantial." During the pendency of this action, however, the ITC realized that it had not made its calculation as a percentage of the demand in the Northeast region, as required by the statute. When the 5.5 percent of "outside" sales were properly calculated as *a percentage of all sales within the N.E. region* the figure rose to 12 to 16 percent for the period under study. This meant that 12 to 16 percent of the demand in the market was being supplied by producers located elsewhere in the United States.

Plaintiffs argue that these new figures are clearly substantial as a matter of law, being three to four times the percentage of sales represented by the imports, being substantial in an ordinary arithmetical sense; going markedly beyond the bounds intended by Congress to define a truly isolated market, and beyond the range in which agency discretion could conceivably be exercised. Plaintiff ask the Court to set aside the injury determination as unlawful or, if it should see fit to remand the matter to the agency, to do so with instructions that the conditions for finding a separate industry do not exist.

Defendant argues that the Court should limit itself to remanding the question for the ITC to reconsider its finding based on the correct percentage.

Although the new figures are markedly larger the Court cannot say that, as a matter of law, they are beyond the realm of what can be considered insubstantial. For this reason, the Court will remand the question, not however, without expressing some of the factors which ought to be involved in the reconsideration.

The level of imports in a region is not a standard for measuring the substantiality of sales in the region from elsewhere in the United States. First, there is the distinction that imports need only be "significant" while the satisfaction of demand from elsewhere in the United States must not occur to any "substantial" degree. More importantly, there is a teleological distinction. The imports, which are in a "suspect" condition because they are being sold at less than fair value, are being examined for their significance as a possible cause of injury. Causal effect in such cases, if we may draw an analogy to the law of torts, can be demonstrated at a relatively low threshold level provided the cause is in "proximity." The sales from elsewhere are being

examined to determine the isolation of a market, which is a more general question of condition, not cause and effect. Therefore, the quantity of fairly priced material from elsewhere in the United States may exceed that of imports sold at less than fair value without necessarily being "substantial" in the sense of the statute.

However, with respect to the ordinary meaning suggested by the phrase "to any substantial degree" the Court is concerned by the degree of market penetration shown in the corrected data. The Court notes the possible inconsistency between isolation and reliance on producers elsewhere for the satisfaction of 12 to 16 percent of demand. The Court is troubled by the prospect that permitting this degree of external domestic satisfaction of a market might allow an arbitrary or freehanded sculpting of regional markets. These are questions with which the ITC must grapple in its reconsideration.

The legislature took pains to carefully define the regional variation of the term "industry." It is conceivable that this definition may be subject to special considerations which are within the capacity of the ITC to determine and explain. For this reason, in this formative stage of the administration of the new law, and at this juncture of the action the Court does not undertake to state the limits of the phrase "to any substantial degree." It also refrains from judging whether analogies may be drawn, as suggested by plaintiffs, between the substantiality of the sales from elsewhere and such concepts as the substantiality of the lessening of competition required by § 3 of the Clayton Act (15 U.S.C. § 14). Consequently, the Court does not reach such examples as the finding in *Standard Oil Co.* v. *United States*, 337 U.S. 293 (1948) that objectionable contracts which affected 6.7 percent of the business in a seven-state area went far toward supporting the inference that competition had been, or probably would be substantially lessened.

A proper respect for the role of the ITC suggests that it be allowed to complete an analysis of the corrected data and bring its expertise to bear on this question. The Court notes only that when the limits of the plain meaning of the statutory language are being tested, it is particularly important for the ITC to state with precision the reasoning which supports its conclusions. See generally, *SCM Corporation* v. *United States*, 84 Cust. Ct. 227, C.R.D. 80–2, 487 F. Supp. 96 (1980).

The same approach holds true for the second error discovered during the pendency of this proceeding. The second error bears on a subsequent step in the ITC's determination. When the existence of a separate regional industry has been determined, the law provides that material injury may be found if there is a concentration of dumped imports in that market and if the producers *of all, or almost all, of the production within that market* are being materially injured. These

additional factors are set out in the continuation of 19 U.S.C. § 1677(4)(C) which reads as follows:

In such appropriate circumstances, material injury * * * may be found to exist with respect to an industry * * * if there is a concentration of * * * dumped imports into such an isolated market and if the producers of all, or almost all, of the production within that market are being materially injured * * * by reason of the * * * dumped imports.

Later, in 19 U.S.C. § 1677(7)(C)(iii) the statute mentions actual decline in profits as one of the factors which the ITC must evaluate in examining the impact of imports and arriving at a conclusion regarding material injury.

The ITC found declining profits in general and net losses for several firms. It now appears that the financial data of the second largest producer in the region was mistakenly treated by the ITC as showing a loss. In reality, the data showed that the producer operated profitably during the period under consideration. This certainly requires a reevaluation of the evidence. A complicating factor is the existence of a special agreement between this producer and its supplier which adjusts the raw material supply price to insure a profit for the producer.

Thus, the question is presented of the significance of the profitability of such a producer and what effect it has on the requirement that, for a regional industry, the material injury must be to the producers of all or almost all the production in the market. The finding by the ITC on this point must now be reconsidered in light of the complete evidence. Once again the magnitude of the error and the existence of an explicit statutory guideline require that the results of this reconsideration be expressed with particularity, and that the reasoning be given which indicates how the statutory standard has been applied.

II

The Court sees no lack of substantial evidence or lack of conformity to the law in the other findings to which plaintiffs object. A discussion of these objections forms the second part of this opinion.

It is true that the ITC in some recent investigations has expressed the view that the "appropriate circumstances" for finding a regional industry require that the condition of the regional producers be worse than that of the industry at large.[2] However, the possibility that distinct reasons can account for differences between the economic health of a regional industry and the industry elsewhere, make this

[2] *Certain Steel Wire Nails from the Republic of Korea*, Inv. No. 731-TA-26 (Final) under the Tariff Act (1930), USITC Pub. No. 1088 (Aug. 1980) *Asphalt Roofing Shingles from Canada*, Inv. No. 731-TA-29 (Preliminary), USITC Pub. No. 1100, 2 ITRD 5171 (Oct. 1980).

an unreliable standard, even assuming it is a permissible factor in determining the existence of a regional industry. The Court cannot find error in the failure to apply a standard it considers superfluous and of questionable logical validity.

The previously mentioned statutory requirement that producers in a regional industry sell all or almost all their production in that market is satisfied by the sale of 94 percent of production (using the lower of the two figures found by the Commission). The requirement that there be a "concentration" of dumped imports in the region is certainly supported by the sale of approximately 97 percent of the imports in the region under consideration.

Plaintiffs claim that the Commission's analysis of the volume of the imports was cursory and flawed. The Commission is required by 19 U.S.C. § 1677(7)(C)(i) to consider whether the volume of imports (or the increase in volume) is "significant," either in absolute terms or relative to production or consumption in the United States. In this case the maximum volume of imports in the region (which is the proper focus of attention in this case) was 4.5 percent of the primary distribution, which is a volume measure of refiners' sales and a reasonable reflection of consumption. The Court sees no deficiency in reasoning which regards small percentages as significant, particularly when the legislative history shows an awareness of this very possibility. See, S. Rep. No. 96–249, 96th Cong., 1st Sess., p. 88 (1979).

Evidence that regional producers had to sell at a substantial discount to meet import competition was sufficient to support a finding that prices were depressed to a significant degree within the meaning of 19 U.S.C. § 1677(7)(C)(ii)(II).

For agricultural products, the ITC is also required to consider any increased burden on government price support programs. 19 U.S.C. § 1677(D)(ii). Here, the ITC overstated the impact of the imports on the government's sugar price support program when it called the effect "particularly severe." [3] However, even though substantial evidence may have been lacking, the conclusion itself was immaterial. A lesser burden, or even the absence of any burden at all, on the sugar price support program would not necessarily detract from an injury determination which was based on the impact of the imports on the producers themselves. The statutory requirement that the ITC consider any increased burden on government price support programs is intended to insure that the injury analysis of an agricultural industry will not be distorted by the beneficial effects of those programs and will not be avoided by the superficial appearance of an industry whose health is being sustained by govern-

[3] *Sugars And Syrups From Canada*, *supra*, at 4.

ment assistance. See, S. Rep. No. 96–249, 96th Cong., 1st Sess., p. 88 (1979). Here, where the industry was found to be suffering and displaying injury directly, the burden on government price support programs was of doubtful importance.

In this connection, it should also be noted that no single factor is given decisive effect in determining material injury. In fact, at 19 U.S.C. § 1677(7)(E)(ii) the law specifically disclaims the controlling effect of the presence or absence of any of the evaluative factors.

Plaintiffs also argue that the ITC failed to make findings with respect to their claim that the declining per capita consumption of sugar and the increased use of high-fructose corn syrup were more significant causes of injury to the industry than the importations. This does not detract from the ITC's determination. The ITC is not required to weigh the extent of injury from imports against the extent of injury from other causes, if they exist. The essence of its duty is to discern whether or not the imports are a cause of material injury to the industry and to do so based on a reasoned analysis of the evidence before it. See, S. Rep. No. 96–249, 96th Cong., 1st Sess., pp. 74–75 (1979). If substantial evidence exists to support the finding of sufficient causal connection between the imports and the injury, the existence of other contributing causes is immaterial.

The ITC's conclusion that regional producers lost sales as a result of the imports was supported by substantial evidence, both in the form of responses to questionnaires by regional producers and information from the Departments of Labor and Commerce. The information from the other government agencies was derived from their determinations that sugar workers at certain locations in the region were eligible for adjustment assistance, determinations which are based in part on findings that declining sales due to imports contributed to the workers' predicament. 19 U.S.C. § 2272

Plaintiffs' claim that they were denied due process by reason of the irregular attendance of the Commissioners during plaintiffs' presentation was unsupported and of doubtful legal significance.

Defendant has asked for a partial affirmance of the final injury determination. However, despite the existence of subsidiary findings with which the Court has not found fault, the final injury determination must be considered as a unitary decision. In its present form, it is defective and cannot be approved.

It is therefore ORDERED, That the final antidumping duty order and the injury determination upon which it was based are vacated, and it is further

Ordered, That within 90 days the ITC shall issue a new determination after considering the corrected data regarding the regional demand supplied from elsewhere and, if it is reached, the evidence

regarding the profitability of the producers in the region, and it is further

Ordered, That the new determination shall state with particularity the standards applied and the reasoning utilized in arriving at a conclusion as to whether or not the demand in the region is satisfied to any substantial degree from elsewhere in the United States and, if it is reached, shall give a similar explanation for the conclusion as to whether it is the producers of all, or almost all, of the production in that market who are being materially injured, and it is further

Ordered, That this action is stayed until the issuance of a new determination.

(Slip Op. 81–63)

NAKAJIMA ALL CO., LTD., PLAINTIFF *v.* UNITED STATES, DEFENDANT, SMITH-CORONA GROUP, CONSUMER PRODUCTS DIVISION, SCM CORPORATION, INTERVENOR

Court No. 80–6–00933

Memorandum and Order

[Plaintiff's motion to amend and to supplement administrative record denied.]

(Dated July 9, 1981)

Alan S. Hays, Esq. and *Paul, Weiss, Rifkind, Wharton & Garrison*, Esqs., for the plaintiff.

Stuart E. Schiffer, Acting Assistant Attorney General; *David M. Cohen*, Director, Commercial Litigation Branch; *Velta A. Melnbrencis*, Esq., for the defendant.

Eugene L. Stewart and *Terence P. Stewart*, Special Counsel to the intervenor.

NEWMAN, *Judge:* Plaintiff moves to amend and supplement the administrative record in this action brought pursuant to 19 U.S.C. § 1516a by adding two documents. An affidavit filed by plaintiff's counsel Mr. Hays in support of the motion avers that the documents in question concern "information newly determined to be relevant" respecting prior submissions to the administering authority. According to the supporting affidavit, the information contained in the two documents did not come to the attention of plaintiff's counsel until after this action had been commenced.

Plaintiff has also moved for a protective order respecting confidential documents filed in support of its motion to amend and supplement the record.

Defendant and the intervenor oppose plaintiff's motion to amend and supplement the administrative record on the ground that the

granting of such motion would be contrary to 19 U.S.C. § 1516a, which provides that determinations in antidumping duty proceedings are to be reviewed upon the administrative record.[1]

The objection by defendant and the intervenor to plaintiff's motion is well taken. It is clear upon a reading of the statute and its legislative history that review of agency determinations in antidumping duty proceedings is to be undertaken upon the basis of the record made before the agency. 19 U.S.C. § 1516a(b)(2); S. Rep. No. 96-249, 96th Cong., 1st Session., pp. 247-248, 251-252 (1979) and H.R. Rep. No. 96-317, 96th Cong., 1st Sess. 179-181 (1979). This scope of review, predicated solely upon the basis of the administrative record as prescribed by the statute, is in accord with general principles of judicial review of administrative action. *See* Schwartz, *Administrative Law* (1976), § *205*.

Accordingly, it is hereby ordered that plaintiff's motion to amend and supplement the administrative record is denied; plaintiff's motion for a protective order is therefore moot and is denied.

---

[1] Neither defendant nor the intervenor responded to plaintiff's motion for a protective order.

Decisions of the United States Court of International Trade

Abstracts

Abstracted Protest Decisions

DEPARTMENT OF THE TREASURY, *July 13, 1981.*

The following abstracts of decisions of the United States Court of International Trade at New York are published for the information and guidance of officers of the customs and others concerned. Although the decisions are not of sufficient general interest to print in full, the summary herein given will be of assistance to customs officials in easily locating cases and tracing important facts.

WILLIAM T. ARCHEY,
Acting Commissioner of Customs.

DECISION NUMBER	JUDGE & DATE OF DECISION	PLAINTIFF	COURT NO.	ASSESSED	HELD	BASIS	ENTRY AND MERCHANDISE
				Par. or Item No. and Rate	Par. or Item No. and Rate		
P81/107	Rao, J. July 7, 1981	F. W. Myers (Atlantic) & Co., Inc.	79-11-01748	Item 683.50 6.5% (razor) Item 682.60 7.5% (charger) Merchandise appraised as two separate articles	Item 683.50 6.5% Merchandise dutiable as an entirety on basis of constructed value; proper appraised value is $18.90 each, packed, less ocean freight and insurance	F. W. Myers (Atlantic) & Co., Inc. v. U.S., Court No. 79-11-01749 (Order dated 6-18-80, not published)	New York Rechargeable speed razors, HP 1312; electric shavers; entireties
P81/108	Rao, J. July 7, 1981	F. W. Myers (Atlantic) & Co., Inc.	80-3-00990, etc.	Item 683.50 6.5% (razor) Item 682.60 7.5% (charger) Merchandise appraised as two separate articles	Item 683.50 6.5% Merchandise dutiable as an entirety on basis of constructed value; proper appraised value is $18.90 each, packed, less ocean freight and insurance	F. W. Myers (Atlantic) & Co., Inc. v. U.S., Court No. 79-11-01749 (Order dated 6-18-80, not published)	New York Rechargeable speed razors, HP 1312; electric shavers; entireties

DECISION NUMBER	JUDGE & DATE OF DECISION	PLAINTIFF	COURT NO.	ASSESSED	HELD	BASIS	PORT OF ENTRY AND MERCHANDISE
				Par. or Item No. and Rate	Par. or Item No. and Rate		
P81/109	Maletz, J. July 10, 1981	International Seaway Trading Corp.	66/33407, etc.	Item 700.60 20%	Item 700.70 15%, 13%, 12%, 10%, 9% or 7.5%	International Seaway Trading Corp. v. U.S. (C.D. 4773)	New York Footwear
P81/110	Maletz, J. July 10, 1981	International Seaway Trading Corp.	67/87491, etc.	Item 700.60 20%	Item 700.70 15%, 13%, 12%, 10%, 9%, or 7.5%	International Seaway Trading Corp. v. U.S. (C.D. 4773)	New York Footwear
P81/111	Maletz, J. July 10, 1981	Marshall Field & Co.	76-3-00652	Item 737.80 22%	Item 725.50 8%	Amico, Inc. v. U.S. (C.A.D. 1214)	Chicago Music boxes
P81/112	Newman, J. July 10, 1981	A. N. Deringer, Inc., a/c Uniroyal, Inc.	78-1-00175	Item 657.20 9.5%	Item 772.65 4%	Uniroyal, Inc, c/o A. N. Deringer, Inc. v. U.S. (Abs. P80/59)	Champlain-Rouses Point (Ogdensburg) Rubber hose, pipe or tubing in various lengths with attached fittings

Decision of the United States Court of International Trade

Abstracts

Abstracted Reappraisement Decisions

DECISION NUMBER	JUDGE & DATE OF DECISION	PLAINTIFF	COURT NO.	BASIS OF VALUATION	HELD VALUE	BASIS	PORT OF ENTRY AND MERCHANDISE
R81/246	Re, C.J. July 7, 1981	Frederick Wholesale Corp.	77-12-04847, etc.	Export value	Appraised values shown on entry papers, less additions included to reflect currency revaluation	C.B.S. Imports Corp. v. U.S. (C.D. 4739)	New York Various articles

DECISION NUMBER	JUDGE & DATE OF DECISION	PLAINTIFF	COURT NO.	BASIS OF VALUATION	HELD VALUE	BASIS	PORT OF ENTRY AND MERCHANDISE
R81/247	Re, C.J. July 7, 1981	K. Gimbel Accessories, Inc.	74-2-00373	Export value	Appraised value, less percentages and amounts added for currency fluctuation	C.B.S. Imports Corp. v. U.S. (C.D. 4739)	New York Various articles
R81/248	Re, C.J. July 7, 1981	Kanematsu Gosho (USA) Inc.	77-2-00181	Export value	Appraised values shown on entry papers, less additions included to reflect currency revaluation	C.B.S. Imports Corp. v. U.S. (C.D. 4739)	New York Wearing apparel, etc.
R81/249	Re, C.J. July 7, 1981	Kanematsu Gosho (USA) Inc.	77-7-01186	Export value	Appraised values shown on entry papers, less additions included to reflect currency revaluation	C.B.S. Imports Corp. v. U.S. (C.D. 4739)	New York Wearing apparel, etc.
R81/250	Re, C.J. July 7, 1981	Marubeni America Corp.	73-2-00596, etc.	Export value	Unit values found by appraising official, less ocean freight and marine insurance, and without additions for currency fluctuation	C.B.S. Imports Corp. v. U.S. (C.D. 4739)	New York Various articles
R81/251	Re, C.J. July 7, 1981	Marubeni America Corp., Inc.	75-5-01261-S	Export value	$0.8175 per yd. less included insurance, net packed	C.B.S. Imports Corp. v. U.S. (C.D. 4739)	New York Fabrics

R81/252	Re, C.J. July 7, 1981	Marubeni America Corp.	75-8-01951	Export value	Unit values found by appraising customs official, less ocean freight and marine insurance, and without additions for currency fluctuation	C.B.S. Imports Corp. v. U.S. (C.D. 4739)	Chicago Various articles
R81/253	Re, C.J. July 7, 1981	Marubeni America Corp.	75-10-02610, etc.	Export value	Unit values found by appraising customs official, less ocean freight and marine insurance, and without additions for currency fluctuation	C.B.S. Imports Corp. v. U.S. (C.D. 4739)	New York Various articles
R81/254	Re, C.J. July 7, 1981	Marubeni Iida (America) Inc.	73-6-01465	Export value	Unit values found by appraising customs official, less ocean freight and marine insurance, and without additions for currency fluctuation	C.B.S. Imports Corp. v. U.S. (C.D. 4739)	New York Various articles
R81/255	Re, C.J. July 7, 1981	Mitsubishi International Corp.	73-7-01776	Export value	Appraised values shown on entry papers, less additions included to reflect currency revaluation	C.B.S. Imports Corp. v. U.S. (C.D. 4739)	San Francisco; New York Various articles
R81/256	Re, C.J. July 7, 1981	Petrie Stores Corp.	74-2-00516, etc.	Export value	Appraised values shown on entry papers, less additions included to reflect currency revaluation	C.B.S. Imports Corp. v. U.S. (C.D. 4739)	New York Wearing apparel, etc.

350-241 O - 81 - 2

DECISION NUMBER	JUDGE & DATE OF DECISION	PLAINTIFF	COURT NO.	BASIS OF VALUATION	HELD VALUE	BASIS	PORT OF ENTRY AND MERCHANDISE
R81/257	Re, C.J. July 7, 1981	Petrie Stores Corp.	76-12-02789	Export value	Appraised values shown on entry papers, less additions included to reflect currency revaluation	C.B.S. Imports Corp. v. U.S. (C.D. 4739)	New York Wearing apparel, etc.
R81/258	Re, C.J. July 8, 1981	C. R. Anthony Company	73-11-03206	Export value	Appraised values specified on entry papers by liquidating officer, less any additions included which reflect currency revaluation	C.B.S. Imports Corp. v. U.S. (C.D. 4739)	Los Angeles Various articles
R81/259	Re, C.J. July 8, 1981	Marubeni Iida (America) Inc. Marubeni America Corp.	73-7-01758, etc.	Export value	Unit values found by appraising official, less ocean freight and marine insurance, and without additions for currency fluctuation	C.B.S. Imports Corp. v. U.S. (C.D. 4739)	New York Various articles
R81/260	Re, C.J. July 8, 1981	Petrie Stores Corp.	78-8-01500	Export value	Appraised values shown on entry papers, less additions included to reflect currency revaluation	C.B.S. Imports Corp. v. U.S. (C.D. 4739)	New York Wearing apparel, etc.
R81/261	Landis, J. July 8, 1981	Kent International	80-9-01365	Export value	F.o.b. prices set forth in invoices of Willing Industry Co., Ltd.	Agreed statement of facts	Los Angeles Bicycles

R81/262	Watson, J. July 8, 1981	Geigy Chemical Corporation	R66/24882	United States value	U.S. selling prices, less 1% cash discount as determined by customs officer at time of appraisement; less 32.6% representing profit and general expenses usually made in U.S. on sales of dyestuffs of same class or kind; less costs of transportation and insurance from place of shipment to place of delivery in amounts determined by customs officer at time of appraisement; divided by 1.40 or such other factor applied by customs officer, to allow for customs duties payable on imported dyestuffs	U.S. v. Geigy Chemical Corporation et al. (C.A.D. 1155)	New York Benzenoid dyestuffs
R81/263	Watson, J. July 8, 1981	Kent International	77-12-04814	Export value	F.o.b. prices set forth in invoices of Willing Industry Co., Ltd.	Agreed statement of facts.	New York; Baltimore; Norfolk Bicycles

DECISION NUMBER	JUDGE & DATE OF DECISION	PLAINTIFF	COURT NO.	BASIS OF VALUATION	HELD VALUE	BASIS	PORT OF ENTRY AND MERCHANDISE
R81/264	Watson, J. July 10, 1981	Geigy Chemical Corporation	R65/20660, etc.	United States value	U.S. selling prices, less 1% cash discount as determined by customs officer at time of appraisement; less 53.4% representing profit and general expenses usually made in U.S. on sales of dyestuffs of same class or kind; less costs of transportation and insurance from place of shipment to place of delivery in amounts determined by customs officer at time of appraisement; divided by 1.40 or such other factor applied by customs officer, to allow for customs duties payable on imported dyestuffs	U.S. v. Geigy Chemical Corporation et al. (C.A.D. 1155)	New York Benzenoid dyestuffs
R81/265	Boe, J. July 10, 1981	Mitsubishi International Corporation	72-9-01911, etc.	American selling price	Appraised values less 23%, per pair	Agreed statement of facts	Norfolk; Philadelphia; San Francisco; San Juan Footwear

Appeal to U.S. Court of Customs and Patent Appeals

APPEAL 81-19—The United States *v.* Heraeus Amersil, Inc.—PRELIMINARY INJUNCTION—ANTI-INJUNCTION ACT—DECLARATORY JUDGMENT ACT—COLLECTION OF A TAX—INCREASED DUTIES—PRIVILEGE OF DELAYED PAYMENT—ESTIMATED DUTIES—SUMMARY JUDGMENT—TSUS, Appeal from Slip Op. 81-33.

In this case, six entries were liquidated on December 19, 1980 with increases in duty resulting from a value advance because of the inclusion in the appraised value the value of certain precious metals furnished to plaintiff-appellee by its ultimate customer which was omitted from the entered value, and a rate advance from 20 percent under Item 656.10, TSUS, to 25 percent under Item 605.05, TSUS.

On January 23, 1981, the Office of the Regional Commissioner advised plaintiff-appellee by letter that the increased duties of $73,583.75 determined upon liquidation was payable upon receipt of the liquidation bill. Plaintiff-appellee or his representative was further advised to appear at the customhouse and bring payment or proof of payment. Plaintiff-appellee was further advised that, if payment was not made within ten working days from the date of the letter, its privilege of delayed payment of estimated duties and reimbursable services would be denied, and, thereafter, deposit of estimated duties would be required at the time the services are performed.

On February 6, 1981, plaintiff-appellee obtained an extension of time to respond to the January 23, 1981 letter because of the fact that the six lost entries had just been made available at the customhouse, and plaintiff-appellee had not yet been able to verify the calculation of the duties resulting from the liquidation. On February 13, 1981, plaintiff-appellee filed protests against the classification of the merchandise and, at the same time, tendered payment in the sum of $61,333.17 representing the increased duties on the valuation of the merchandise covered by the six entries. On February 20, 1981, plaintiff-appellee was advised by customs that its privilege of delayed payment of the estimated duties was being suspended immediately because the importer was delinquent in its payment of customs bills, and, in the future, plaintiff-appellee would be required to file entry summary

documents with estimated duty attached before its merchandise would be released.

Plaintiff-appellee brought an action in the United States Court of International Trade seeking summary judgment "declaring that the unpaid increased duties in the amount of $12,250.58 on the subject entries are not due and payable unless and until a summons or summonses are filed against denial of protests, or until the time for filing such summonses has expired, and permanently enjoining defendant from requiring plaintiff-appellee to file entry summary documents with the estimated duty attached before its merchandise will be released, and denying reimbursable services without cash payment at the time the services are performed, or otherwise covering payment of the increased duties in question before the date when such duties are due and payable as declared by the Court." Defendant-appellant filed a cross-motion for summary judgment, and a motion to dismiss.

The United States Court of International Trade rendered a decision and judgment on April 24, 1981 in which it granted plaintiff-appellee's motion for summary judgment, denied defendant-appellant's cross-motion for summary judgment, denied plaintiff-appellee's motion for a preliminary injunction, and denied defendant-appellant's motion to dismiss.

Defendant-appellant, being dissatisfied with the decision and judgment of the United States Court of International Trade, appeals to the United States Court of Customs and Patent Appeals, and respectfully prays, pursuant to Section 1541(a) and 2601 (a) and (b), Title 28, United States Code, to review the questions involved therein and to grant such relief in the premises as the Court shall seem just.

International Trade Commission Notices

Investigations by the U.S. International Trade Commission

DEPARTMENT OF THE TREASURY, *July 23, 1981.*

The appended notices relating to investigations by the U.S. International Trade Commission are published for the information of Customs officers and others concerned.

WILLIAM T. ARCHEY,
Acting Commissioner of Customs.

In the Matter of CERTAIN COIN-OPERATED AUDIOVISUAL GAMES AND COMPONENTS THEREOF (VIZ RALLY-X AND PAC MAN)	Investigation No. 337-TA-105

Order

Pursuant to my authority as Chief Administrative Law Judge of this Commission, I hereby designate Administrative Law Judge John J. Mathias as Presiding Officer in this investigation.

The Secretary shall serve a copy of this order upon all parties of record and shall publish it in the Federal Register.

Issued: July 9, 1981.

DONALD K. DUVALL,
Chief Administrative Law Judge.

(19 CFR Part 201)

NATIONAL SECURITY INFORMATION; EXECUTIVE ORDER 12065: IMPLEMENTING REGULATIONS

AGENCY: United States International Trade Commission.

ACTION: Final Rule.

SUMMARY: This regulation implements Executive Order No. 12065, 3 CFR 190 (1978 Compilation), and the Information Security

Oversight Office Directive No. 1, 43 FR 46280 (Oct. 5, 1978), relating to the classification, declassification, and safeguarding of national security information. The order increases openness in Government by limiting the classification and accelerating the declassification of national security information, while providing improved protection against unauthorized disclosure of information that requires protection in the interest of national security.

EFFECTIVE DATE: April 1, 1980.

FOR FURTHER INFORMATION CONTACT: Terry P. McGowan, Acting Director, Office of Administration, U.S. International Trade Commission, 701 E Street NW., Washington, D.C. 20436, telephone 202-523-0463.

SUPPLEMENTARY INFORMATION: The sections in this regulation follow the format of the directive. This regulation has been reviewed by the Information Security Oversight Office in accordance with section 5-401 of Executive Order No. 12065.

SUBPART F—NATIONAL SECURITY INFORMATION

201.42 PURPOSE AND SCOPE.
201.43 PROGRAM.
201.44 PROCEDURES.

AUTHORITY. Executive Order No. 12065, National Security Information, June 28, 1978, 3 CFR 190 (1978 compilation); Information Security Oversight Office, Directive No. 1, National Security Information, October 2, 1978, 43 FR 46280 (Oct. 5, 1978).

201.42 PURPOSE AND SCOPE.

The following regulation supplements Executive Order No. 12065, National Security Information, June 28, 1978, as it applies to the Commission.

201.43 PROGRAM.

The Director of Administration is designated as the Official of the Commission who is responsible for implementation and oversight of information security programs and procedures, including ensuring conformity with the provisions of Executive Order No. 12065. He shall chair a committee, composed of himself and representatives of the offices of the Secretary and General Counsel, that will act on all suggestions and complaints with respect to the Commission's administration of the program. All questions, suggestions, and complaints regarding all elements of the information security program shall be directed to the Director of Administration.

201.44 PROCEDURES.

(a) *Mandatory declassification review.* (1) Requests for declassification and release of national security information in the custody of the Commission shall be directed to the Secretary. Requests must reasonably describe the information that is desired to be declassified. All requests for declassification submitted pursuant to the Freedom of Information Act shall be processed in accordance with the provisions of that act and the applicable regulations of the Commission (19 CFR 201.17–.21).

(2) Because the Commission does not have original classification authority and national security information in its custody has been classified by another Federal agency, the Secretary shall refer all requests for mandatory declassification review of classified information to the originating Federal agency along with his recommendations. Requests for declassification shall be referred and the requester advised within 60 days of receipt of a properly filed request.

(b) *Safeguarding.* All classified materials shall be delivered to the Secretary, or whoever is designated to act in the absence of the Secretary, immediately upon receipt at the Commission. In the event that the Secretary or his designee is not available to receive the materials, they shall be delivered to the Executive Liaison and Special Advisor for Trade Agreements and secured, unopened, in the combination safe located in his office until the Secretary or his designee is available. Under no circumstances shall classified materials that cannot be delivered to the Secretary or his designee be stored other than in the designated safe. Access to classified materials at the Commission shall be limited to officers and employees of the Commission on the basis of a favorable determination of trustworthiness and a need to know.

(c) *Reproduction.* "Top Secret" documents may not be reproduced without the consent of the originating agency unless otherwise marked by that agency. "Secret" and "Confidential" documents may not be reproduced without the permission of the Secretary, and are subject to any limitations imposed by the originator. Reproduced copies shall be subject to the same controls as the original document. The Secretary shall establish a system of recording the number and distribution of copies reproduced from the original documents. Reproduction for the purposes of mandatory review shall not be restricted.

(d) *Storage.* All classified material shall be stored in the GSA-approved combination safe located at the Commission. The combination shall be changed as required by section IV–F–5–a of Information Security Oversight Office Directive No. 1. The combination shall be known only by the Secretary, Director of Administration, General Counsel, and other persons possessing an appropriate security clearance.

(e) *Employee education.* The Director of Administration shall establish for all employees who have been granted a security clearance an information security education program that will advise them of the handling, reproduction, and storage procedures for these materials. The education program will also enable employees to familiarize themselves with the Order and applicable directives of the Information Security Oversight Office. New employees will be instructed in these procedures as they enter employment with the Commission.

(f) *Agency terminology.* The use of the terms "Top Secret," "Secret," and "Confidential" shall beli mited to material classified for national security purposes.

By order of the Commission.

Issued: July 10, 1981.

KENNETH R. MASON,
Secretary.

Index

U.S. Customs Service

	T.D. No.
Treasury decisions:	
Carrier Bonds: CF 3587	81-191
Cotton textile products—restriction on entry:	
Dominican Republic	81-192
India	81-193
Mexico	81-196
Pakistan	81-195
People's Republic of China	81-194
Cuba, CR amended, sec. 10.59	81-198
Customs approved public gauger	81-188
Domestic baggage	81-197
Examination of cigars, etc	81-189
Papua New Guinea, CR amended, sec. 4.22	81-199
Synopses of drawback decisions	81-190
Orange juice	81-190-A
Crankshaft	81-190-B
Steel wire	81-190-C
Steel sheet	81-190-D
Steel sheet metal	81-190-E
Glycerine	81-190-F
Cetyl bromide	81-190-G
Steel, various types	81-190-H
Lead	81-190-I
Steel, stainless	81-190-J
Ethylene	81-190-K
Motorcycle parts	81-190-L
Semiconductor	81-190-M
Grapefruit juice	81-190-N
Guthion technical	81-190-O
Ethylene, propylene	81-190-P
Steel sheet, hot rolled	81-190-Q
Methyl alcohol	81-190-R
Styrene butadiene rubber	81-190-S
Sebacic acid	81-190-T
Yarns, nylon	81-190-U
Sugar, hard	81-190-V
Bladex herbicide	81-190-W
Aircraft parts	81-190-X
PBA & PAE	81-190-Y
Yarn, rayon	81-190-Z
Customs service decisions:	
Bonds: Merchandise entered for a trade fair	81-166

Customs services decisions—Continued

Classification:	T.D. No.
Antique	81-163
Dutiable value of research and development costs	81-162
Nitrocellulose	81-164
Drawback: Cable transported to and laid between countries	81-167
Entry: Courier service importations	81-169
In-bond: The designation of courier to receive merchandise	81-165
Liquidation: ATA carnets	81-170
Trademark: Importation of foreign merchandise bearing an American trademark	81-168
Value: Certain steel structure testing costs	81-161

Court of Customs and Patent Appeals

The United States v. *Elbe Products Corp.*:	C.A.D. No.
Flexible nonwoven fabrics	1267

DEPARTMENT OF THE TREASURY
U.S. CUSTOMS SERVICE
WASHINGTON, D.C. 20229

OFFICIAL BUSINESS
PENALTY FOR PRIVATE USE, $300

POSTAGE AND FEES PAID
DEPARTMENT OF THE TREASURY (CUSTOMS)
(TREAS. 552)

U.S. GOVERNMENT PRINTING OFFICE : 1981 O - 350-341

15/32

Customs Bulletin

Regulations, Rulings, Decisions, and Notices concerning Customs and related matters

and Decisions

of the United States Court of Customs and Patent Appeals and the United States Court of International Trade

Vol. 15 AUGUST 12, 1981 No. 32

NEWARK PUBLIC LIBRARY

AUG 2 7 1981

U. S. GOVT. PUBS.
DEPOSITORY 376

This issue contains

T.D. 81-200 Through 81-205
Slip. Op. 81-64 Through 81-65
Protest Abstracts P81/113 Through P81/123
Reap. Abstracts R81/266 Through R81/269
International Trade Commission Notices

THE DEPARTMENT OF THE TREASURY
U.S. Customs Service

T 1. 11/3:

NOTICE

The abstracts, rulings, and notices which are issued weekly by the U.S. Customs Service are subject to correction for typographical or other printing errors. Users may notify the U.S. Customs Service, Logistics Management Division, Washington, D.C. 20229, of any such errors in order that corrections may be made before the bound volumes are published.

For sale by the Superintendent of Documents, U.S. Government Printing Office, Washington, D.C. 20402. Price: $2.25 (single copy domestic); $2.85 (single copy foreign). Subscription price: $85.00 a year domestic; $106.25 a year foreign.

U.S. Customs Service

Treasury Decisions

(T.D. 81-200)

Synopses of drawback decisions

The following are synopses of drawback rates issued May 5, 1981, to June 11, 1981, inclusive, pursuant to sections 22.1 through 22.5, inclusive, Customs Regulations.

In the synopses below are listed for each drawback rate approved under 19 U.S.C. 1313(a), the name of the company, the specified articles on which drawback is authorized, the merchandise which will be used to manufacture or produce these articles, the factories where the work will be accomplished, the date the statement was signed, the basis for determining payment, the Regional Commissioner who issued the rate, and the date on which it was signed.

(DRA-1-09)

Filed: DRA-1-09, 213257.

Dated: July 22, 1981.

GEORGE C. STEUART
(For Marilyn G. Morrison, Director,
Carriers, Drawback and Bonds Division).

(A) Company: Alcan Aluminum Corp., Alcan Sheet & Plate Div.
Articles: Aluminum and aluminum alloy sheet in coil form, (cold rolled, thermal treated and edge trimmed).
Merchandise: Imported aluminum and aluminum alloy sheet in coil form.
Factories: Oswego, NY; Warren, OH; Fairmont, WV.
Statement signed: April 7, 1981.
Basis of claim: Used in, less valuable waste.
Rate issued by Regional Commissioner of Customs: Boston, May 13, 1981.

(B) Company: All-Power, Inc.
Articles: Diesel driven electric generator sets.

Merchandise: Imported A.C. alternators, diesel engines, and circuit breakers.
Factory: Conshohocken, PA.
Statement signed: May 7, 1981.
Basis of claim: Used in.
Rate issued by Regional Commissioner of Customs: Baltimore, May 19, 1981.
Revokes: T.D. 78–379–A and T.D. 79–2–B to cover change in name from All-Power Supply Co.

(C) Company: Amelco Products, Inc.
Articles: Diesel driven electric generator sets.
Merchandise: Imported A.C. alternators, diesel engines, circiut breakers.
Factory: Conshohocken. PA.
Statement signed: May 7, 1981.
Basis of claim: Used in.
Rate issued by Regional Commissioner of Customs: Baltimore, May 19, 1981.

(D) Company: Amprobe Instrument Division of Core Industries, Inc.
Articles: Various electric testing equipment.
Merchandise: Imported parts and components for electrical testing equipment.
Factory: Lynbrook, NY.
Statement signed: February 25, 1981.
Basis of claim: Appearing in.
Rate issued by Regional Commissioner of Customs: New York, May 21, 1981.

(E) Company: Burroughs Corp.
Articles: Finished semiconductors.
Merchandise: Imported unfinished semiconductor subassemblies.
Factory: San Diego, CA.
Statement signed: May 8, 1981.
Basis of claim: Appearing in.
Rate issued by Regional Commissioner of Customs: San Francisco, June 8, 1981.

(F) Company: Clinton Electronics Corp.
Articles: Cathode ray tubes.
Merchandise: Imported glass envelopes (bulbs).
Factory: Rockford, IL.

Statement signed: March 25, 1981.
Basis of claim: Used in.
Rate issued by Regional Commissioner of Customs: Chicago, May 13, 1981.

(G) Company: Cook Bros. Equipment Co.
Articles: Transit concrete mixers, concrete pumps, dump trailers, textile machinery, industrial mixers, blenders, and processors, marine engines and parts, recreational vehicles and trucks.
Merchandise: Imported sheet or roll steel, transmissions, gear boxes, rubber hose hydrau ic and concrete pumping cylinders and controls hydraulic pumps and motors, internal combustion engines, and diesel engines and components.
Factories: Industry, CA; Bryan, OH; Calhoun, GA; Warren, OH.
Statement signed: April 23, 1981.
Basis of claim: Appearing in.
Rate issued by Regional Commissioner of Customs: Los Angeles, May 5, 1981.

(H) Company: Dart Truck Company Division, PACCAR.
Articles: Front end loaders, log stackers and other heavy duty off-highway trucks and equipment.
Merchandise: Imported engines and tires.
Factory: Kansas City, MO.
Statement signed: May 13, 1981.
Basis of claim: Used in.
Rate issued by Regional Commissioner of Customs: Chicago, May 20, 1981.

(I) Company: Dorado Micro Systems, dba International Memories, Inc.
Articles: Disc drives.
Merchandise: Imported electric motors.
Factories: Cupertino, CA; White City, OR.
Statement signed: April 30, 1981.
Basis of claim: Appearing in.
Rate issued by Regional Commissioner of Customs: San Francisco, May 6, 1981.

(J) Company: E. I. du Pont de Nemours and Co.
Articles: Explosion bonded titanium clad plate and finished heat treated explosion bonded titanium clad plate.
Merchandise: Imported steel plates; and drawback unfinished heat treated explosion bonded titanium clad plate.

Factories: Coatesville and Dunbar, PA.
Statement signed: November 20, 1980.
Basis of claim: Used in.
Rate issued by Regional Commissioner of Customs: Chicago, May 20, 1981.

(K) Company: The Flexene Corp.
Articles: Uninked ribbons for various office machines.
Merchandise: Imported silk piece goods and typewriter ribbon cloth.
Factory: New York, NY.
Statement signed: January 21, 1981.
Basis of claim: Appearing in.
Rate issued by Regional Commissioner of Customs: New York, May 21, 1981.

(L) Company: International Flavors & Fragrances, Inc.
Articles: Fragrances and fragrance components and flavorings and flavoring components.
Merchandise: Imported fragrances and fragrance components and flavorings and flavoring components and organic chemicals used in the manufacture thereof.
Factories: Hazlet, Union Beach, and Teterboro, NJ.
Statement signed: February 12, 1981.
Basis of claim: Used in.
Rate issued by Regional Commissioner of Customs: New York, May 14, 1981.

(M) Company: Mark Levinson Audio Systems, Ltd.
Articles: Various preamplifiers, pre-preamplifiers, active crossovers, mono preamplifiers, power supplies, power amplifiers and interconnecting cables.
Merchandise: Various imported shorting plugs, camac female chassis-connectors, female chassis power supply connectors, male power supply connectors, and silver and hook-up wire.
Factory: Hamden, CT.
Statement signed: April 2, 1980.
Basis of claim: Used in.
Rate issued by Regional Commissioner of Customs: New York, June 5, 1981.

(N) Company: Lightworks—Division of Light and Sound Specialities, Inc.
Articles: Tubelite, Litepanel and Crystawall.
Merchandise: Imported miniature lightbulbs.

Factory: Philadelphia, PA.
Statement signed: April 20, 1981.
Basis of claim: Used in.
Rate issued by Regional Commissioner of Customs: Baltimore, May 8, 1981.

(O) Company: Loré International (Disc.), Inc.
Articles: Silk wearing apparel.
Merchandise: Imported silk yardage, lace, and trimmings.
Factory: Los Angeles, CA.
Statement signed: May 18, 1981.
Basis of claim: Used in.
Rate issued by Regional Commissioner of Customs: Los Angeles, May 29, 1981.
Revokes: T.D. 80–296–0.

(P) Company: Mannesmann Tally Corp.
Articles: All models of T1000 printers: T1602, T1605, T1702, T1705, 1802, 1805; all models of T1612 printers: T1612 RO, T1612 KSR.
Merchandise: Imported Mannesmann Tally serial printer mechanisms.
Factory: Kent, WA.
Statement signed: April 28, 1981.
Basis of claim: Used in.
Rate issued by Regional Commissioner of Customs: San Francisco, June 8, 1981.
Revokes: T.D. 77–123–P to cover successorship from Tally Corp.

(Q) Company: Moulinex Manufacturing, Inc.
Articles: Food processors, vegetable chef attachment and blender attachment.
Merchandise: Imported component parts.
Factory: Virginia Beach, VA.
Statement signed: April 23, 1981.
Basis of claim: Used in.
Rate issued by Regional Commissioner of Customs: Baltimore, May 7, 1981.

(R) Company: Nicolet Magnetic Corp.
Articles: Fourier Transform Nuclear Resonance Spectrometer systems.
Merchandise: Imported nuclear magnetic resonance superconducting magnetics.
Factory: Mountain View, CA.
Statement signed: May 8, 1981.

Basis of claim: Appearing in.
Rate issued by Regional Commissioner of Customs: San Francisco, May 26, 1981.

(S) Company: Plantronics, Inc.
Articles: Lightweight headsets and tele-communications equipment.
Merchandise: Imported electronic sub-assemblies, stuffed and soldered printed circuit boards, transducer capsule assemblies, head-set cord assemblies, and numerous miscellaneous components.
Factory: Santa Cruz, CA.
Statement signed: April 29, 1981.
Basis of claim: Appearing in.
Rate issued by Regional Commissioner of Customs: San Francisco, May 18, 1981.

(T) Company: RCA Corp.
Articles: Color television receivers.
Merchandise: Imported color television chassis.
Factory: Bloomington, IN.
Statement signed: April 24, 1981.
Basis of claim: Appearing in.
Rate issued by Regional Commissioner of Customs: Chicago, May 13, 1981.

(U) Company: Remex Division, Ex-Cell-O Corp.
Articles: Computer peripheral equipment; floppy disc drives.
Merchandise: Imported magnetic recording heads, fraction horsepower motors, and electronic assemblies.
Factory: Irvine, CA.
Statement signed: April 24, 1981.
Basis of claim: Appearing in.
Rate issued by Regional Commissioner of Customs: Los Angeles, May 5, 1981.

(V) Company: Sherry Manufacturing Co., Inc.
Articles: Printed beach towels, shopping bags, ladies and men's apparel, children's bathing suits, and dish towels.
Merchandise: Imported unprinted beach towels, shopping bags, ladies and men's apparel, children's bathing suits, and dish towels.
Factory: Miami, FL.
Statement signed: April 13, 1981.
Basis of claim: Used in.

Rate issued by Regional Commissioner of Customs: Miami, June 11, 1981.

(W) Company: Shramm, Inc.
Articles: Shramm Rotadrills, hi-pressure auxilliary air compressors and portable air compressors.
Merchandise: Imported various size models GHH screw compressor ends.
Factory: West Chester, PA.
Statement signed: May 1, 1981.
Basis of claim: Used in.
Rate issued by Regional Commissioner of Customs: Baltimore, May 20, 1981.

(X) Company: Southern Saw Service, Inc.
Articles: Meat chopper knives, stainless butcher band saw blades, meat chopper plates.
Merchandise: Imported meat chopping machine parts.
Factory: Atlanta, GA.
Statement signed: March 5, 1981.
Basis of claim: Used in.
Rate issued by Regional Commissioner of Customs: Miami, May 8, 1981.

(Y) Company: Victor Business Products.
Articles: Calculators, cash registers, and sub-assemblies.
Merchandise: Imported incomplete calculators, cash registers, and components.
Factory: El Paso, TX.
Statement signed: April 7, 1981.
Basis of claim: Appearing in.
Rate issued by Regional Commissioner of Customs: Houston, May 6, 1981.

(Z) Company: Wean United, Inc.
Articles: Hot strip mill assemblies.
Merchandise: Imported housing, F–1 drive and pinion stand parts, and other component parts, all for hot strip mills.
Factory: Youngstown, OH.
Statement signed: May 6, 1981.
Basis of claim: Used in, less valuable waste.
Rate issued by Regional Commissioner of Customs: Chicago, May 18, 1981.

350-342 O - 81 - 2

(T.D. 81-201)

Cotton Textile Products—Restriction on Entry

Restrictions on entry of cotton textile products manufactured or produced in Singapore

There is published below a directive of April 17, 1981, received by the Commissioner of Customs from the Chairman, Committee for the Implementation of Textile Agreements, concerning restriction on entry of cotton textile products in categories 347/348 manufactured or produced in Singapore. This directive amends, but does not cancel, that Committee's directive of December 16, 1980 (T.D. 81-67).

This directive was published in the Federal Register on April 22, 1981 (46 FR 22922), by the Committee.

(QUO-2-1)

Dated: July 23, 1981.

WILLIAM D. SLYNE,
(For Richard R. Rosettie, Acting Director,
Duty Assessment Division).

U.S. DEPARTMENT OF COMMERCE,
INTERNATIONAL TRADE ADMINISTRATION,
Washington, D.C., April 17, 1981.

Committee for the Implementation of Textile Agreements

COMMISSIONER OF CUSTOMS,
Department of the Treasury,
Washington, D.C.

DEAR MR. COMMISSIONER: This directive amends, but does not cancel, the directive of December 16, 1980 from the Chairman, Committee for the Implementation of Textile Agreements, concerning imports into the United States of certain cotton, wool and man-made fiber textile products, produced or manufactured in Singapore.

Effective on April 23, 1981, the directive of December 16, 1980 is amended to increase the level of restraint established for Category 347/348 as follows:

Category	*Amended 12-mo level of restraint* [1]
347/348	465,991 dozen of which not more than 498,502 dozen shall be in Cat. 347 and not more than 225,013 dozen shall be in Cat. 348.

The actions taken with respect to the Government of the Republic of Singapore and with respect to imports of cotton textile products from Singapore have been determined by the Committee for the Implementation of Textile Agreements to involve foreign affairs functions of the United States. Therefore, these directions to the Commissioner of Customs, which are necessary for the implementation of such actions, fall within the foreign affairs exception to the rule-making provisions of 5 U.S.C. 553. This letter will be published in the Federal Register.

Sincerely,

PAUL T. O'DAY,
Chairman, Committee for the Implementation of Textile Agreements.

(T.D. 81-202)

Cotton Textile Products—Restriction on Entry

Restriction on entry of cotton textile products manufactured or produced in Thailand

There is published below a directive of July 7, 1981, received by the Commissioner of Customs from the Chairman, Committee for the Implementation of Textile Agreements, concerning restriction on entry of cotton textile products in category 320 manufactured or produced in Thailand. This directive amends, but does not cancel, that Committee's directive of December 19, 1980 (T.D. 81-131).

This directive was published in the Federal Register on July 10, 1981 (46 FR 35718), by the Committee.

(QUO-2-1)

Dated: July 23, 1981.

WILLIAM D. SLYNE,
(For Richard R. Rosettie, Acting Director,
Duty Assessment Division.)

U.S. DEPARTMENT OF COMMERCE,
INTERNATIONAL TRADE ADMINISTRATION,
Washington, D.C., July 7, 1981.

Committee for the Implementation of Textile Agreements

COMMISSIONER OF CUSTOMS,
Department of the Treasury,
Washington, D.C.

DEAR MR. COMMISSIONER: This directive amends, but does not

cancel, the directive of December 19, 1980, from the Chairman of the Committee for the Implementation of Textile Agreements which directed you to prohibit entry during the twelve-month period which began on January 1, 1981 and extends through December 31, 1981 of cotton, wool and man-made fiber textile products in certain specified categories, produced or manufactured in Thailand, in excess of designated levels of restraint.

Under the terms of the Arrangement Regarding International Trade in Textiles done at Geneva on December 20, 1973, as extended on December 15, 1977; pursuant to the Bilateral Cotton, Wool and Man-Made Fiber Textile Agreement of October 4, 1978, as amended, between the Governments of the United States and Thailand; and in accordance with the provisions of Executive Order 11651 of March 3, 1972, as amended by Executive Order 11951 of January 6, 1977, you are directed to prohibit, effective on July 7, 1981 and for the twelve-month period beginning on January 1, 1981 and extending through December 31, 1981, entry into the United States for consumption and withdrawal from warehouse for consumption of cotton textile products in Category 320, produced or manufactured in Thailand, in excess of 16 million square yards.[1]

The action taken with respect to the Government of Thailand and with respect to imports of cotton textile products from Thailand has been determined by the Committee for the Implementation of Textile Agreements to involve foreign affairs functions of the United States. Therefore, these directions to the Commissioner of Customs, which are necessary for the implementation of such actions, fall within the foreign affairs exception to the rule-making provisions of 5 U.S.C. 553. This letter will be published in the Federal Register.

Sincerely,

PAUL T. O'DAY,
Chairman, Committee for the Implementation of Textile Agreements.

(T.D. 81-203)

Bonds

Approval and discontinuance of carrier's bonds, Customs Form 3587

Bonds of carriers for the transportation of bonded merchandise have been approved or discontinued as shown below. The symbol

---

[1] The level of restraint has not been adjusted to reflect any imports after December 31, 1980.

"D" indicates that the bond previously outstanding has been discontinued on the month, day, and year represented by the figures which follow. "PB" refers to a previous bond, dated as represented by figures in parentheses immediately following, which has been discontinued. If the previous bond was in the name of a different company or if the surety was different, the information is shown in a footnote at the end of the list.

Dated: July 27, 1981.

Name of principal and surety	Date of bond	Date of approval	Filed with district director/area director/amount
A & H Express Lines (Canada), Ltd., 928 Marion St., St. Boniface, Manitoba, Canada; motor carrier; UnitedStates Fidelity & Guaranty Co. D 6/12/81	Mar. 28, 1961	May 1, 1961	Pembina, ND $20,000
American Commercial Barge Line Co., Box 610, 1701 E. Market St., Jeffersonville, IN; water carrier; Federal Ins. Co. (PB 7/19/67) D 6/11/81	May 19, 1981	June 11, 1981	Cleveland, OH $150,000
Badger Freightways, Inc., 2720 N. 19th St., Sheboygan, WI; motor carrier; Fidelity & Deposit Co. of MD D 8/19/81	Apr. 21, 1978	May 2, 1978	Milwaukee, WI $25,000
Dist-Trans Multi Services, Inc. (See Tahwheelalen Express, Inc.)			
Dworkin, Inc., 5400 Harvard Ave., Cleveland, OH; motor carrier; St. Paul Fire & Marine Ins. Co. (PB 2/1/69) D 6/11/81	May 26, 1981	June 11, 1981	Cleveland, OH $50,000
Eazor Express, Inc., and its wholly owned sub: Daniels Motor Freight, Inc., Eazor Square, Pittsburgh, PA; motor carrier; Seaboard Surety Co. D 7/13/81	Feb. 20, 1971	Mar. 29, 1971	Philadelphia, PA $100,000
Express Transport Corp., P.O. Box 1, Crows Mill Rd., Keasbey, NJ; motor carrier; Liberty Mutual Ins. Co.	Apr. 30, 1981	June 2, 1981	Baltimore, MD $25,000
First Freight Inc. (See Omega Air Cargo)			
Fuller Transportation, Inc., 1200 Shull St., W. Columbia, SC; motor carrier; Liberty Mutual Ins. Co. D 6/12/79	June 27, 1975	July 28, 1975	Charleston, SC $25,000
Gilchrist Trucking Inc., 105 N. Keyser Ave., Old Forge, PA; motor carrier; Washington International Ins. Co.	Apr. 17, 1981	June 10, 1981	Philadelphia, PA $50,000
Horizon Transport, Inc., P.O. Box 20848, Portland, OR; motor carrier; Safeco Ins. Co. of America	May 7, 1981	June 17, 1981	Portland, OR $25,000
McCracken Motor Freight, Inc., 3641 N.W. St. Helens Rd., Portland, OR; motor carrier; Peerless Ins. Co.	Nov. 26, 1980	May 7, 1981	Portland, OR $25,000

See footnotes at end of table.

350-342 O - 81 - 3

Name of principal and surety	Date of bond	Date of approval	Filed with district director/area director/amount
Midwest Eastern Transport, Inc., P.O. Box 1614, Elkhart, IN; motor carrier; Ins. Co. of North America	Dec. 1, 1980	May 26, 1981	Chicago, IL $25,000
Midwest Solvents Co., Inc., 1300 Main St., Box 309, Atchison, KS; motor carrier; The Travelers Indemnity Co.	Apr. 8, 1981	June 22, 1981	St. Louis, MO $50,000
P.A. Milan, Inc., 392 Pearl St., Malden, MA; motor carrier; Liberty Mutual Ins. Co. (PB 10/22/71) D 5/3/81[1]	May 1, 1981	May 7, 1981	Boston, MA $25,000
Motor Freight Express Inc., Arsenal Rd. and Toronita St., York, PA; motor carrier; Ins. Co. of North America D 5/15/81	June 20, 1971	June 29, 1971	Baltimore, MD $25,000
Motor Freight Express, Arsenal Rd. and Toronita, York, PA; motor carrier; St. Paul Fire & Marine Ins. Co.	May 19, 1981	May 20, 1981	Philadelphia, PA $25,000
Mustang Distributing Co., Inc., 23505 N.E. Halsey, Troutdale, OR; motor carrier; American States Ins. Co. D 7/6/81	Mar. 18, 1980	Mar. 21, 1980	Portland, OR $25,000
First Freight Inc., d.b.a. Omega Air Cargo, Bldg. "D" Airfreight Complex, P.O.B. 61193, Dallas/Fort Worth Airport, TX; motor carrier; Old Republic Ins. Co.	June 4, 1981	June 4, 1981	Dallas/Fort Worth, TX $25,000
P & G Motor Freight, Inc., 430 Burnham St., S. Windsor, CT; motor carrier; St. Paul Fire & Marine Ins. Co. D 5/27/81	May 27, 1970	June 2, 1970	New York Seaport $25,000
J.L. Rothrock, Inc., P.O. Box 1230, High Point, NC; motor carrier; Great American Ins. Co.	June 1, 1981	June 5, 1981	Wilmington, NC $25,000
Service Refrigerated Transport, P.O. Box 2218, Hunter St., Freight Station, Newark, NJ; motor carrier; The American Ins. Co. D 6/8/81	June 1, 1975	Aug. 12, 1975	New York Seaport $50,000
Dist-Trans Multi Services, Inc., d.b.a. Tahwheelalen Express, Inc., P.O. Box 7191, 1333 Nevada Blvd., Charlotte, NC; motor carrier; American Casualty Co. of Reading, PA (PB 8/13/80) D 6/15/81[2]	June 3, 1981	June 16, 1981	Wilmington, NC $25,000
Transport Champlain Express (International) Inc., Cowansville, Quebec, Canada; motor carrier; The Continental Ins. Co. (PB 7/18/79) D 6/15/81[3]	June 15, 1981	June 15, 1981	St. Albans, VT $25,000
Virginia Cartage Corporation, 2349 Campostella Rd., Chesapeake, VA; motor carrier; Fidelity & Deposit Co. of MD. D 6/1/81	Sept. 1, 1971	Oct. 29, 1971	Norfolk, VA $25,000

See footnotes at end of table.

Name of principal and surety	Date of bond	Date of approval	Filed with district director/area director/amount
Dovel Wade, d.b.a. Vol Air Freight, P.O. Box 4, Alcoa, TN; air carrier; Nationwide Mutual Ins. Co.	Jan. 9, 1981	Apr. 24, 1981	New Orleans, LA $25,000

[1] Surety is Peerless Ins. Co.
[2] Principal is Dist-Trans Multi Services, Inc.
[3] Principal is Transport Champlain Express (International) Inc./Champlain Express Transport (International) Inc.; Surety is Transamerica Ins. Co.

BON-3-03

MARILYN G. MORRISON,
Director,
Carriers, Drawback and Bonds Division.

T.D. 81-204

Foreign Currencies—Variances From Quarterly Rate

The following rates of exchange are based upon rates certified to the Secretary of the Treasury by the Federal Reserve Bank of New York, pursuant to Section 522(C), Tariff Act of 1930, as amended (31 USC 372(c)), and reflect variances of 5 per centum or more from the quarterly rate published in Treasury Decision for the following countries. Therefore, as to entries covering merchandise exported on the dates listed, whenever it is necessary for Customs purposes to convert such currency into currency of the United States, conversion shall be at the following rates.

Thailand baht (tical)	
July 16, 1981	$0.043383
July 17, 1981	.043384

(LIQ-03-01 O:C:E)

Dated: July 17, 1981.

KENNETH A. RICH,
Acting Chief.

(T.D. 81-205)

Foreign Currencies—Daily Rates for Countries Not on Quarterly List

The Federal Reserve Bank of New York, pursuant to section 522(c), Tariff Act of 1930, as amended (31 U.S.C. 372(c)), has certified

buying rates for the dates and foreign currencies shown below. The rates of exchange, based on these buying rates, are published for the information and use of Customs officers and others concerned pursuant to Part 159, Subpart C, Customs Regulations (19 CFR 159, Subpart C).

Argentina peso:	
July 1–2, 1981	$0. 000225
July 3–9, 1981	. 000220
July 10–16, 1981	. 000216
July 17, 1981	. 000214
Chile peso:	
July 1–17, 1981	$0. 025667
Colombia peso:	
July 1–2, 1981	$0. 018491
July 3–9, 1981	. 018454
July 10, 1981	. 018402
July 13–15, 1981	. 018403
July 16, 1981	. 018402
July 17, 1981	. 018403
Greece drachma:	
July 1, 1981	$0. 017007
July 2, 1981	. 016935
July 3, 1981	. 016949
July 6, 1981	. 016694
July 7, 1981	. 016736
July 8, 1981	. 016584
July 9, 1981	. 016639
July 10, 1981	. 016736
July 13, 1981	. 016906
July 14, 1981	. 016708
July 15, 1981	. 016849
July 16, 1981	. 016949
July 17, 1981	. 016683
Indonesia rupiah:	
July 1–2, 1981	$0. 001585
July 3, 1981	. 001667
July 6–9, 1981	. 001585
July 10, 1981	. 001584
July 13–15, 1981	. 001585
July 16, 1981	. 001584
July 17, 1981	. 001585
Israel shekel:	
July 1, 1981	$0. 085690
July 2–7, 1981	. 084818

July 8–13, 1981	.081967
July 14–15. 1981	.082645
July 16, 1981	.082644
July 17, 1981	.082645
Peru sol:	
July 1–2, 1981	$0.002404
July 3, 1981	.002439
July 6–9, 1981	.002398
July 10–16, 1981	.002392
July 17, 1981	.002370
South Korea won:	
July 1, 1981	$0.001464
July 2–6, 1981	.001458
July 7–17, 1981	.001456

(LIQ–03–01 O:C:E)

Dated: July 17, 1981.

KENNETH A. RICH,
Acting Chief.

U.S. Customs Service

Recent Unpublished Customs Service Decisions

The following listing of recent administrative decisions issued by the Office of Regulations and Rulings, U.S. Customs Service, and not otherwise published, is published for the information of Customs officers and the importing community. Although the decisions are not of sufficient general interest to warrant publication as Treasury Decisions, the listing describes the issues involved and is intended to aid Customs officers and concerned members of the public in identifying matters of interest which recently have been considered by the Office of Regulations and Rulings.

A copy of any decision included in this listing, identified by its date and file number, may be obtained in a form appropriate for public distribution upon written request to the Office of Regulations and Rulings, Attention: Legal Retrieval and Dissemination Branch, Room 2404, U.S. Customs Service, 1301 Constitution Avenue, N.W., Washington, D.C. 20229. These copies will be made available at a cost to the requester of $0.10 per page. However, the Customs Service will waive this charge if the total number of pages copied is ten or less.

Decisions listed in earlier issues of the Customs Bulletin, through February 2, 1981, are available in microfiche format at a cost of $30.90 ($0.15 per sheet of fiche). It is anticipated that additions to the microfiche will be made quarterly and subscriptions are available. Requests for the microfiche now available and for subscriptions should be directed to the Legal Retrieval and Dissemination Branch. Subscribers will automatically receive updates as they are issued and will be billed accordingly.

Dated: July 28, 1981.

MARVIN M. AMERNICK,
Acting Director,
Regulations Control and Disclosure Law Division.

Date of decision	Control No.	Issue
6-26-81	105116/ 105142	Vessels: whether a vessel in one area of a consolidated port may obtain clearance at another area in the consolidated port
6-24-81	105200	Vessels: pending amendment of section 4.22, CR, to add Dominica to the list of nations whose vessels are exempt from the payment of special tonnage tax and light money
6-16-81	542498	Trade Agreements Act: whether certain engineering costs used to establish specifications and prepare detailed drawings are dutiable assists under the TAA
7- 7-81	062814	Classification: Screw hook and a bolt hook (646.72, 646.54, 923.51)
6-18-81	064624	Classification: IA 122/79 reconsidered and affirmed to hold that certain scalloped edging used to finish raw edges of a sweater does constitute ornamentation
6-16-81	065118	Classification: 26 BW Medium semi-chemical corrugating medium (252.90)
6-22-81	065489	Classification: amphibious vehicle designed to tow a barge on ice or water (692.35, 692.02, 683.39)
6-25-81	065610	Classification: hangers, springs, and brushings (652.84, 692.32, 692.32)
6-25-81	065618	Classification: stainless steel wire rod (606.90)
6-25-81	065644	Classification: rifle and syringe projectile (730.81, 774.55)
6- 5-81	065672	Classification: women's jeans with plastic belts (382.33, 772.30)
6-25-81	065752	Classification: hydraulic nut and accessories (660.85, 660.97, 657.25, 711.78, 772.65, 610.80, 610.30, 610.52)
6-22-81	065844	Classification: pressure sensitive tapes, semi-conducting tapes of woven fabric, of man-made fibers (790.55, 355.65, 355.82, 309.35)
6-18-81	065977	Classification: electric typewriter (676.05)
6-16-81	066740	Classification: polypropylene fiber (445.52)
6-10-81	066973	Classification: metallic and plastic wires suitable for use in paper making machinery (642.25, 642.30)
6-25-81	068280	Classification: circular glass trays used in microwave ovens (684.28)
6-25-81	068358	Classification: ladies beachcomber (700.60)
6- 5-81	068363	American selling price: basis of valuation of ladies casual open toe shoes unit molded bottoms
6- 5-81	068377	Classification: women's blouses (682.04)
6- 5-81	068448	Classification: solar balloon (737.95)
6-18-81	068459	Classification: fiberglass woven roving reinforcement fabric consisting of a layer of woven man-made glass fibers bonded to a mat of chopped non-woven, man-made glass fiber strands (359.50)
6- 5-81	068489	Classification: men's casual shoe with rope foxing (700.60)

Date of decision	Control No.	Issue
6- 9-81	068491	Classification: ladies open toe, slingback, medium wedge casual shoe of plastic (700.60)
6-25-81	068566	Classification: acrylic hat that features braid between hat and pom-pom ornamentation (703.10)
6-22-81	068570	Classification: air bypass valve (680.27)
7- 7-81	068729	Classification: screw hooks, bolt hooks (646.72, 646.54)

United States Court of International Trade

One Federal Plaza
New York, N.Y. 10007

Chief Judge

Edward D. Re

Judges

Paul P. Rao
Morgan Ford
Scovel Richardson
Frederick Landis
James L. Watson
Herbert N. Maletz
Bernard Newman
Nils A. Boe

Senior Judge

Samuel M. Rosenstein

Clerk

Joseph E. Lombardi

Decisions of the United States Court of International Trade

(Slip Op. 81–64)

BRANIFF AIRWAYS, INC., PLAINTIFF *v.* THE UNITED STATES, DEFENDANT

Court No. 75–3–00646

WARRANTY OBLIGATIONS

In the absence of evidence provided by the plaintiff relating to expenditures which may have been made by the manufacturer-seller pursuant to its warranty obligations contained in a purchase agreement to rectify defects occurring in the manufacture of aircraft purchased by plaintiff, the sum attributed to the cost of such

350-342 O - 81 - 4

warranty by the Customs Service as a part of the constructed value of the aircraft must be deemed "profit."

[Judgment for defendant.]

(Decided July 14, 1981)

Arnold & Porter (*Kenneth A. Letzler* at the trial; *Paul S. Berger* with him on the briefs) for the plaintiff.

Stuart E. Schiffer, Acting Assistant Attorney General; *Joseph I. Lieb'man*, Attorney in Charge, International Trade Field Office, Commercial Litigation Branch (*Saul Davis* at the trial and on the brief), for the defendant.

BOE, *Judge:* Subsequent to the entry of a prior order of this court in the above-entitled action denying a motion to grant judgment on the pleadings and on an accompanying stipulation of facts, the parties again have submitted the within action for determination and judgment predicated upon the prior proceedings before this court, Plaintiff's Exhibit 1, and a further stipulation executed by the parties hereto under date of March 26, 1981, Plaintiff's Exhibit 2.[1]

From the pleadings, the stipulations between the parties and the affidavits submitted by the plaintiff, Exhibits 3 and 4, the following facts are deemed germane to a determination of the issue presented and sufficient to permit an adjudication thereof.

The subject merchandise consists of 13 BAC One-Eleven Jet Passenger Aircraft manufactured by the British Air Corporation (hereinafter referred to as BAC) in the United Kingdom, imported therefrom by the plaintiff and entered at the port of Newark, New Jersey between March 1965 and January 1966. In the purchase agreement entered into between the plaintiff and BAC, it was agreed that 10 percent of the total purchase price for each aircraft represented the cost of the "services," "warranties," "taxes," "liabilities" and "indemnities" furnished by the seller to the buyer as well as the amount of the agency commissions payable by BAC in connection with the sale of the aircraft to the plaintiff. Plaintiff's Exhibit 1 (Exhibit A, Article III). Included in the appraised value of each aircraft, set forth with particularity in plaintiff's complaint, is the sum of $57,115 attributable to the cost of warranties relating to the correction and rectification of defects in the aircraft by BAC pursuant to the specific provisions of the purchase agreement. The correction of the defects to be performed by BAC within a defined period of time might be made in the United Kingdom as well as in the United States depending upon circumstances and the options specified in the purchase agreement.[2] The warranty provisions con-

[1] The order denying judgment on the pleadings and an accompanying stipulation of facts was denied by this court under date of November 14, 1979 on the grounds that a genuine issue of material facts remained in connection with the review of the appraised constructed value of the merchandise in question. An order denying a motion for rehearing by the defendant was entered on January 17, 1980.

[2] Plaintiff's Exhibit 1 (Exhibit A, Article VI, Sections 6.01, 6.02 and 6.03).

tained in the purchase agreement relating to the imported aircraft were negotiated at arms length between the parties possessing relatively equal bargaining power and economic strength.

From the further stipulation submitted by the parties in connection with the present proceeding, Plaintiff's Exhibit 2, it is established that:

> 1. At all relevant times, there were in the country of exportation no other producers of merchandise of the same general class or kind as that at issue in this case; * * *

The parties are in agreement that the appraisement of the subject aircraft properly was made on the basis of constructed value pursuant to section 402(d), Tariff Act of 1930, as amended by the Customs Simplification Act of 1956 (19 U.S.C. 1401a(d)) providing:

> (d) Constructed value.
> For the purposes of this section, the constructed value of imported merchandise shall be the sum of—
> (1) the cost of materials (exclusive of any internal tax applicable in the country of exportation directly to such materials or their disposition, but remitted or refunded upon the exportation of the article in the production of which such materials are used) and of fabrication or other processing of any kind employed in producing such or similar merchandise, at a time preceding the date of exportation of the merchandise undergoing appraisement which would ordinarily permit the production of that particular merchandise in the ordinary course of business;
> (2) an amount for general expenses and profit equal to that usually reflected in sales of merchandise of the same general class or kind as the merchandise undergoing appraisement which are made by producers in the country of exportation, in the usual wholesale quantities and in the ordinary course of trade, for shipment to the United States; and
> (3) the cost of all containers and coverings of whatever nature, and all other expenses incidential to placing the merchandise undergoing appraisement in condition, packed ready for shipment to the United States.

It is undisputed that the sum of $57,115 is the amount attributable to the cost of the warranties included in the appraised valuation of the subject aircraft by the Customs Service. Thus, the sole question to be determined herein is whether the said sum has properly been included in the appraised constructed value.

Counsel for the plaintiff, placing great reliance on the fact that the correction of any defects in the subject aircraft by BAC is (1) contingent in character and (2) may be physically performed in the United States after importation, contends that the warranty in essence is similar to a service contract and/or an insurance policy guaranteeing repair of the aircraft after importation into the United States. It, accordingly, follows, the plaintiff urges, that the warranty is not a

"general expense" in connection with the manufacture of the subject aircraft within the contemplation of the statute.

Although, for the reasons hereinafter stated, a determination as to whether a warranty of the character in issue is a "general expense" is unnecessary to the adjudication of the instant action, the court is reluctant to accept without comment the foregoing arguments urged by the plaintiff. The obligation of BAC as the manufacturer of the subject aircraft to correct and rectify the defects in the design and construction of each respective aircraft, as well as to replace the defective materials found to exist therein, became a binding obligation at the time the purchase agreement was executed with the plaintiff. It was an obligation *in praesenti* to rectify the defects which might be found to exist in the aircraft manufactured by BAC when such defects in design, materials or workmanship became evident within the periods of time specified in the purchase agreement. The warranty and the obligation created thereby became an integral part of each aircraft manufactured by BAC. It is difficult for the court not to view the warranty provisions as an inducement to effect the sale of the subject aircraft to the plaintiff. The respective warranty provisions, initially proposed by BAC and the plaintiff during the negotiations relating to the purchase agreement, would appear to evidence the significant part a warranty may play in consummating the transaction at a purchase price which the plaintiff as a buyer was willing to pay.

"General expenses and profit," as provided for in the statutory provision are neither related nor restricted solely to the manufacture of the merchandise in question. As the statute specifically mandates, the component which is a part of constructed value includes the "general expenses and profit" which have been incurred in the *sale* of the merchandise for shipment to the United States. *New York Credit Men's Adjustment Bureau, Inc.* v. *United States*, 64 Cust. Ct. 770, 314 F. Supp. 1246 (1970); *United States* v. *C. J. Tower & Sons of Buffalo, Inc.*, 60 CCPA 46, 470 F. 2d 1393 (1972).[3]

In light of the stipulation offered by the respective parties in the present proceedings, Exhibit 2, establishing that there are no producers of the same general class or kind as the subject aircraft from which the amount of general expenses and profit are usually reflected in the sales of such merchandise for shipment to the United States

[3] In the *Tower* decision our appellate court emphasized that in the statutory provisions for the determination of constructed value, Congress has specified that the amount for general expenses and profit shall be equal to the amount reflected in " 'sales of merchandise * * *, *for shipment to the United States*.' Emphasis added." 60 CCPA at 52. Although impliedly recognizing warranty costs as expenses, the appellate court affirmed the determination of the trial court that the warranty costs had not been incurred by the manufacturing company (Studebaker of Canada) and, accordingly, the amount of such expenses were not properly a part of the cost of production.

can be ascertained, the actual general expense and profit of BAC necessarily are accepted. *United States* v. *Jovita Perez*, 36 CCPA 114, C.A.D. 407 (1949); *English Electric Export and Trading Co.* v. *United States*, 53 CCPA 84, C.A.D. 881 (1966).

From Plaintiff's Exhibits 3 and 4, consisting of affidavits relating to the customary accounting procedures used by BAC, it appears that at the time of export of each aircraft a reserve account for warranty expenses was established by making a charge against income. As stated in paragraph 11 of Plaintiff's Exhibit 3 and in paragraph 8 of Plaintiff's Exhibit 4, "[a]ctual warranty expenses were charged against the reserve as the expenses occurred after export." Thus, although the record provides the procedure by which accounting was conducted by BAC in connection with the manufacture and sale of the subject aircraft, it, however, remains silent with respect to the amount of the reserve charged against income as well as the specific and actual warranty expenses charged against the reserve.

If the sum of $57,115 of the appraised valuation of each aircraft, attributed by the Customs Service to be the cost of warranties thereon to BAC, is not properly included as a "general expense" then such sum must remain as income and profit, derived from the purchase price paid by the plaintiff, until such time the plaintiff has established the amount of the expenditures made by BAC in the performance of its warranty obligations. As has been succinctly stated in the case of *United States* v. *Alfred Dunhill of London, Inc.*, 32 CCPA 187, C.A.D. 305 (1945), "profit is calculated on the difference between such expenses and receipts."

Although the result of the decision of our appellate court in the case of *English Electric Export and Trading Co.* v. *United States*, 53 CCPA 84, C.A.D. 881 (1966) was a reduction of the appraised constructed value of the subject merchandise therein, the reasoning of the appellate court in that decision is deemed applicable. In the *English Electric* case certain generators imported from England into the United States were tested after importation and found to be defective. A "credit for penalty" relating to the contract price for the generators had been accepted by the company because of a failure of the merchandise to meet temperature requirements specified in the contract. In holding that the penalty constituted a reduction in the profit of the manufacturer, our appellate court stated:

> Since the appraisement here is on the basis of the profit item in the cost of production being the profit actually added, the penalty sum amounts to a reduction in the actual profit and should have been subtracted from the appraised value. The fact that the transaction involving the penalty occurred after

exportation presents no difficulty since it did occur in time for evidence regarding it to be submitted to the Trial Court. 53 CCPA at 89–90.

Unlike the proof provided in the *English Electric* case, the plaintiff in the instant action has neither provided the Customs Service nor this court any evidence relating to the expenditures which may have been made by BAC pursuant to its contractual obligations to correct and rectify defects occurring in the manufacture of the subject aircraft. The appraised valuation was made seven years after the importation of the aircraft in question. Ample opportunity has been afforded plaintiff, after the expiration of the warranty periods, to apprise the Customs Service of the expenses incurred by BAC or at the very least the defects discovered in each aircraft corrected BAC under the terms of the purchase agreement. In the absence of such profit this court can only deem the sum of $57,115, to constitute "profit" and, accordingly, a part of the constructed value of the aircraft in question.

Upon the plaintiff rests the burden to prove the correct dutiable value of the subject aircraft. *A. N. Deringer, Inc.* v. *United States*, 53 CCPA 135, C.A.D. 890 (1966); *United States* v. *Cavalier Shipping Co.*, 56 CCPA 117, 412 F. 2d 245 (1969).

The plaintiff having failed in its burden to rebut the presumption of correctness attaching to the appraisement of the subject aircraft on the basis of constructed value, the appraised valuation as determined by the Customs Service is affirmed and the above-entitled action, accordingly, is hereby dismissed.

Let judgment be entered accordingly.

(Slip Op. 81–65)

OLD REPUBLIC INSURANCE COMPANY AND PEERLESS INSURANCE COMPANY, PLAINTIFFS, *v.* WINSTON E. PITMAN, DISTRICT DIRECTOR OF CUSTOMS, MIAMI, FLORIDA; ROBERT N. BATTARD, REGIONAL COMMISSIONER OF CUSTOMS, MIAMI, FLORIDA; AND THE UNITED STATES CUSTOMS SERVICE, DEFENDANTS

Court No. 81–7–00891

Temporary Restraining Order and Order To Show Cause Why a Preliminary Injunction Should Not Issue

(July 16, 1981)

RICHARDSON, Judge: Upon reading and filing the verified complaint, the summons, and affidavits of counsel herein, together with Motion for Temporary Restraining Order and Preliminary Injunction against

the defendants, for the purpose of restraining them from refusing to honor the surety bonds issued by the plaintiffs in connection with entries of merchandise into the Miami Customs District; and said motions being supported by allegations contained in the Verified Complaint; together with plaintiff's written and oral statements and affidavits in support thereof the Court finds that in order to preserve the status quo of the parties the Court should issue a Temporary Restraining Order.

The rejection of plaintiffs surety bonds on entries filed in the District of Miami by the District Director, dated July 13, 1981, without prior notice and opportunity for hearing under 31 CFR 223.17 will cause immediate irreparable harm, injury, loss, and damage, in that it forces members of the importing public who are customers of plaintiffs to seek alternative sources for purposes of obtaining surety bonds on importations, with the possible permanent loss of such customers. Therefore, it is

ORDERED AND ADJUDGED that the above-named Defendants, together with their agents, servants, employees and representatives under the direct or indirect control of said Defendants, are hereby temporarily restrained and enjoined from:

1. Refusing to honor surety bonds issued by the plaintiffs, OLD REPUBLIC INSURANCE COMPANY and PEERLESS INSURANCE COMPANY, in conjunction with entries of merchandise into the United States through the Miami Customs District, or any other Customs District.

2. Engaging in any conduct that results in the surety bonds issued by the plaintiffs, OLD REPUBLIC INSURANCE COMPANY and PEERLESS INSURANCE COMPANY, being dishonored with regard to any entries of merchandise made into the United States through the Miami Customs District, or any other Customs District.

3. Revoking, withdrawing, or cancelling the status of OLD REPUBLIC INSURANCE COMPANY and PEERLESS INSURANCE COMPANY as sureties approved by the Secretary of Treasury to issue surety bonds with regard to entries of merchandise into the United States through the Miami Customs District, or any other Customs District.

4. Implementing any of their directives or policy statements that result in the surety bonds of OLD REPUBLIC INSURANCE COMPANY and PEERLESS INSURANCE COMPANY being dishonored with regard to the entry of merchandise into the United States through the Miami Customs District, or any other Customs District.

5. Failing to release any merchandise covered by said Customs Surety bonds for the sole reason that said merchandise is subject to such bonds.

The instant Temporary Restraining Order shall remain in full

force and effect until the hearing on the application for Preliminary Injunction herein.

The defendants are further ORDERED to Show Cause before the United States Court of International Trade, on Monday, the 27th day of July, 1981 at 10:30 o'clock a.m., why a Preliminary Injunction in this matter should not issue.

Decisions of the United States Court of International Trade

Abstracts

Abstracted Protest Decisions

DEPARTMENT OF THE TREASURY, *July 21, 1981.*

The following abstracts of decisions of the United States Court of International Trade at New York are published for the information and guidance of officers of the customs and others concerned. Although the decision are not of sufficient general interest to print in full, the summary herein given will be of assistance to customs officials in easily locating cases and tracing important facts.

WILLIAM T. ARCHEY,
Acting Commissioner of Customs.

DECISION NUMBER	JUDGE & DATE OF DECISION	PLAINTIFF	COURT NO.	ASSESSED	HELD	BASIS	ENTRY AND MERCHANDISE
				Par. or Item No. and Rate	Par. or Item No. and Rate		
P81/113	Landis, J. July 13, 1981	Banff International, Ltd.	80-11-00078	Item 382.81 25¢ per lb. +27.5%	Item 382.42 7.5%	Agreed statement of facts	New York Ladies skirts and pants
P81/114	Landis, J. July 13, 1981	Corning Glass Works et al.	80-1-00113, etc.	Item 710.90 25%	Item 712.49 10%	Agreed statement of facts	New York Time domain reflectometers.

DECISION NUMBER	JUDGE & DATE OF DECISION	PLAINTIFF	COURT NO.	ASSESSED	HELD	BASIS	PORT OF ENTRY AND MERCHANDISE
				Par. or Item No. and Rate	Par. or Item No. and Rate		
P81/115	Newman, J. July 13, 1981	A. N. Deringer, Inc., a/c Uniroyal, Inc.	78-1-00177	Item 657.20 9.5%	Item 772.65 4%	Uniroyal, Inc., c/o A. N. Deringer, Inc. (Abs. P80/59)	Champlain-Rouses Point (Ogdensburg) Rubber hose, pipe or tubing in various lengths with attached fittings
P81/116	Landis, J. July 14, 1981	Uniroyal, Inc.	80-6-00946	Item 680.12 5.5%	Item 680.11 Free of duty	Judgment on the pleadings	Bridgeport Footwear molds for use with Desma 714 machine
P81/117	Newman, J. July 14, 1981	A. N. Deringer, Inc., a/c Uniroyal, Inc.	78-1-00184	Item 657.20 9.5%	Item 772.65 4%	Uniroyal, Inc., c/o A. N. Deringer, Inc. v. U.S. (Abs. P80/59)	Champlain-Rouses Point (Ogdensburg) Rubber hose, pipe or tubing in various lengths with attached fittings
P81/118	Newman, J. July 14, 1981	A. N. Deringer, Inc., a/c Uniroyal, Inc.	78-5-00918, etc.	Item 657.20, 657.25 or 657.40 9.5%	Item 772.65 4%	Uniroyal, Inc., c/o A. N. Deringer, Inc. v. U.S. (Abs. P80/59)	Champlain-Rouses Point (Ogdensburg) Rubber hose, pipe or tubing in various lengths with attached fittings

P81/119	Ford, J. July 17, 1981	RMS Electronics, Inc.	77-11-04777-S	Item 682.05 12.5%	Item 682.07 6%	RMS Electronics, Inc. v. U.S. (C.D. 4818, aff'd C.A.D. 1249)	New York Baluns, impedence matching couplers, matching transformers, model No. CA-2500
P81/120	Richardson, J. July 17, 1981	Sortex Co. of North America, Inc.	75-5-01248, etc.	Item 712.49 12%, 11.5%, 11%, 10.5% or 10%	Item 666.25 11.5%, 10%, 9%, 8%, 6.5% or 5.5%	Sortex Company of North America, Inc. v. U.S. (C.D. 4746, aff'd C.A.D. 1221)	Boston; Detroit Electronic color sorting machines and parts
P81/121	Richardson, J. July 17, 1981	Sortex Co. of North America, Inc.	75-9-02436	Item 712.49 12%, 11.5%, 11%, 10.5% or 10%	Item 666.25 11.5%, 10%, 9%, 8%, 6.5% or 5.5%	Sortex Company of North America, Inc. v. U.S. (C.D. 4746, aff'd C.A.D. 1231)	Boston; Detroit Electronic color sorting machines and parts thereof
P81/122	Richardson, J. July 17, 1981	Sortex Co. of North America, Inc.	77-12-04796, etc.	Item 712.49 10%	Item 666.25 5.5%	Sortex Company of North America, Inc. v. U.S. (C.D. 4746, aff'd C.A.D. 1221)	Boston Electronic color sorting machines and parts thereof
P81/123	Newman, J. July 17, 1981	A. N. Deringer, Inc., a/c Uniroyal, Inc.	78-1-00188	Item 657.20 9.5%	Item 772.65 4%	Uniroyal, Inc., c/o A. N. Deringer, Inc. v. U.S. (Abs. P80/59)	Champlain-Rouses Point (Ogdensburg) Rubber hose, pipe or tubing in various lengths with attached metal fittings

Decisions of the United States Court of International Trade

Abstracts

Abstracted Reappraisement Decisions

DECISION NUMBER	JUDGE AND DATE OF DECISION	PLAINTIFF	COURT NO.	BASIS OF VALUATION	HELD VALUE	BASIS	PORT OF ENTRY AND MERCHANDISE
R81/266	Landis, J. July 13, 1981	Topp Electronics, Inc.	78-10-01795	Constructed value	Various values specified on entry papers by liquidating officer excluding one-half of amount added for assists set forth in schedule of protests attached to decision and judgment	Agreed statement of facts	Los Angeles Various articles
R81/267	Re, C.J. July 14, 1981	Regal Accessories, Inc.	78-12-02321	Export value	Appraised values shown on entry papers less additions included to reflect currency revaluation	C.B.S. Imports Corp. v. U.S. (C.D. 4739)	New York Wearing apparel, etc.
R81/268	Landis, J. July 14, 1981	Columbia House, a Division of CBS, Inc.	79-3-00430	Constructed value	Invoiced unit values, packed	Agreed statement of facts	New York Duplicate film positives
R81/269	Landis, J. July 14, 1981	Kent International	80-7-01060	Export value	F.o.b. Prices set forth in invoices of Willing Industry Co., Ltd.	Agreed statement of facts	Philadelphia Bicycles

best copy available

Judgment of the U.S. Court of International Trade in Appealed Case

July 13, 1981

Appeal 80-28.—THE FERRISWEEL *v.* UNITED STATES.—SCOTTISH HIGHLAND JACKETS AND KILTS—GARMENTS (WOOL AND COTTON) WITH FRINGE, EPAULETS OR BRAID—MEN'S WEARING APPAREL, ORNAMENTED—MEN'S WEARING APPAREL, NOT ORNAMENTED—TSUS.—C.D. 4844 affirmed in part and reversed in part March 12, 1981 (C.A.D. 1260); ordered, adjudged, and decreed that the wool Argyll jackets are properly classifiable under item 380.02, TSUS, with duty at the rate of 42.5 percent ad valorem; that the cotton Sheriffmuir jackets are properly classifiable under item 380.00, TSUS, with duty at the rate of 35 percent ad valorem; that the wool men's kilts are properly classifiable under item 380.66, TSUS, with duty at the rate of 37.5¢ per lb., plus 21 percent ad valorem; and that the district director of customs at Washington, D.C. shall reliquidate the entries accordingly.

International Trade Commission Notices

Investigations by the U.S. International Trade Commission

DEPARTMENT OF THE TREASURY, JULY 30, 1981

The appended notices relating to investigations by the U.S. International Trade Commission are published for the information of Customs officers and others concerned.

WILLIAM T. ARCHEY,
Acting Commissioner of Customs.

In the Matter of CERTAIN ULTRAFILTRATION MEMBRANE SYSTEMS AND COMPONENTS THEROF, INCLUDING ULTRAFILTRATION MEMBRANES	Investigation No. 337-TA-107

Order No. 1

Pursuant to my authority as Chief Administrative Law Judge of this Commission, I hereby designate Administrative Law Judge Donald K. Duvall as Presiding Officer in this investigation.

The Secretary shall serve a copy of this order upon all parties of record and shall publish it in the Federal Register.

Issued: July 15, 1981.

DONALD K. DUVALL,
Chief Administrative Law Judge.

(TA-131(b)-6)

Probable Economic Effects of Possible Tariff Reductions Under Section 124 of the Trade Act of 1974

AGENCY: United States International Trade Commission.

ACTION. In accordance with the provisions of section 131(b) of the Trade Act of 1974 (hereinafter referred to as "the Act"), the

Commission has instituted investigation No. TA-131(b)-6 for the purpose of obtaining, to the extent practicable, information of the kind described in section 131(d) of the Act. This information is for use in connection with the preparation of advice requested by the U.S. Trade Representative (USTR) on June 17, 1981 in accordance with section 131(a) of the Act with respect to articles classified in the following 6 items of the Tariff Schedules of the United States:

TSUS item	Brief description
147.64	Fresh grapes (except hothouse) entered July 1 to February 14, inclusive
642.30	Fourdrinier wires for papermaking machines
653.01 (pt.)	Only tents and similar structures having an aluminum frame and a vinyl laminated polyester fabric shell or cover
685.7010	Indicator panels incorporating semiconducting luminescent devices (LED's)
685.80(pt.)	Only fixed or variable electrical vacuum capacitors
687.3010	Light emitting diodes

For each of these articles the USTR requests the probable economic effects on U.S. industries producing like or directly competitive articles and on consumers of the reduction of United States duties by the maximum amount permissible under the residual tariff reduction authority granted to the President under section 124. The USTR published the list of articles in the July 7, 1981 Federal Register (46 F.R. 35234).

EFFECTIVE DATE: July 16, 1981.

FOR FURTHER INFORMATION CONTACT: (1) Agricultural products, Mr. Edward Furlow (202–724–0068); (2) Minerals and metals, Mr. Larry Brookhart (202–523–0275); (3) Machinery and equipment, Mr. Aaron Chesser (202–523–0353); Office of Industries, United States International Trade Commission, 701 E Street NW., Washington, D.C. 20436; (4) Legal aspects, Mr. William Gearhart, (202–523–0487), Office of General Counsel, at the same address.

SUPPLEMENTARY INFORMATION:

PUBLIC HEARING

A public hearing in connection with the investigation will be held in the Commission Hearing Room, 701 E Street NW., Washington, D.C. 20436, beginning at 10:00 a.m., e.d.t., on August 18, 1981. All

persons shall have the right to appear by counsel or in person, to present information, and to be heard. Requests to appear at the public hearing should be filed with the Secretary, United States International Trade Commission, 701 E Street NW., Washington, D.C. 20436, not later than noon, August 11, 1981.

WRITTEN SUBMISSIONS

In lieu of or in addition to appearances at the public hearing, interested persons are invited to submit written statements concerning the investigation. Commercial or financial information which a submitter desires the Commission to treat as confidential must be submitted on separate sheets of paper, each clearly marked "Confidential Business Information" at the top. All submissions requesting confidential treatment must conform with the requirements of section 201.6 of the Commission's *Rules of Practice and Procedure* (19 C.F.R. 201.6). All written submissions, except for confidential business information, will be made available for inspection by interested persons.

To be ensured of consideration by the Commission, written statements should be submitted at the earliest practicable date, but no later than August 31, 1981. All submissions should be addressed to the Secretary at the Commission's office in Washington, D.C.

By order of the Commission.

Issued: July 17, 1981.

KENNETH R. MASON,
Secretary.

(332-73)

Notice of Release for Public Comment of Provisionally Adopted Chapters of the Harmonized Commodity Description and Coding System

AGENCY: United States International Trade Commission.

ACTION: Release for public comment, pursuant to Commission investigation No. 332-73, under the authority of section 332(g) of the Tariff Act of 1930, as amended, of drafts of the following chapters of the Harmonized Commodity Description and Coding System (Harmonized System) as provisionally adopted by the Harmonized System Committee and the Nomenclature Committee of the Customs Cooperation Council.

Chapter 72: Iron and steel
Chapter 73: Articles of iron or steel
Chapter 83: Miscellaneous articles of base metal

WRITTEN SUBMISSIONS: Parties wishing to submit written comments should do so by August 15, 1981.

HEARING: Parties desiring the Commission to hold a hearing on these draft chapters of the Harmonized System should contact the Secretary of the Commission by July 31, 1981, and show good cause for holding a hearing.

COPIES OF DOCUMENTS: Copies of the chapters which are the subject of this notice are available for public inspection at the offices of the Commission, 701 E Street, NW., Washington, D.C. 20436. The Commission will also send copies to interested parties upon request.

FOR FURTHER INFORMATION CONTACT: Eugene A. Rosengarden, Director, Office of Tariff Affairs, U.S. International Trade Commission, 701 E Street, NW., Washington, D.C. 20436, Telephone: 202/523-0370.

SUPPLEMENTARY INFORMATION: In its public notices of February 8, 1980 (45 F.R. 9828 of February 13, 1980), March 21, 1980 (45 F.R. 19696 of March 26, 1980), August 15, 1980 (45 F.R. 55549 of August 20, 1980) and June 24, 1981 (46 F.R. 34439 of July 1, 1981) the Commission identified 94 chapters of the Harmonized Commodity Description and Coding System (Harmonized System) for which texts had been provisionally adopted by the Harmonized System and Nomenclature Committees of the Customs Cooperation Council. The purpose of the above mentioned notices was to invite comments and views of interested parties with respect to the 94 chapters.

Since the release of the June 24, 1981 notice, provisionally adopted texts of three further chapters have been received from the Customs Cooperation Council. This notice hereby amends the previous notice by adding these three new chapter texts to the list of texts released for public comment.

This notice is being issued pursuant to Commission investigation No. 332-73, instituted on January 31, 1975 (40 F.R. 6329), under section 332(g) of the Tariff Act of 1930. The investigation was initiated in accordance with section 608(c) of the Trade Act of 1974, which provides, in part, that the Commission shall institute an investigation which would provide the basis for—

> (2) full and immediate participation by the United States International Trade Commission in the United States contribution to technical work of the Harmonized Systems [sic] Committee under the Customs Cooperation Council to assure the recognition of the needs of the United States business community in the development of a Harmonized Code reflecting sound principles of commodity identification and specification and modern producing methods and trading practices * * *.

The Harmonized System is being developed by the Customs Cooperation Council (CCC), a 91-member international organization with headquarters in Brussels, as an international commodity classification system which will be adaptable for modernized customs tariff nomenclature purposes and for recording, handling, and reporting of transactions in international trade. The Harmonized System will be based on, and in many respects will be an extension of, the Customs Cooperation Council Nomenclature (CCCN), formerly known as the Brussels Tariff Nomenclature (BTN).

The Technical Team, working under auspices of the CCC, prepared drafts of the various chapters of the Harmonized System for consideration by the Harmonized System Committee, which was established in order to develop the system. These drafts were forwarded to the members and observers of the Committee for their review and submission of written comments. The Committee met three times a year to consider these drafts and the written comments and presentations of the various delegations. The review of a particular chapter or group of chapters often extended to more than one meeting.

In its public notices of May 4, 1976 (41 F.R. 18716 of May 6, 1976), August 9, 1976 (41 F.R. 34370 of August 13, 1976), December 20, 1976 (41 F.R. 55948 of December 23, 1976), September 1, 1977 (42 F.R. 44852 of September 7, 1977), February 7, 1978 (43 F.R. 5902 of February 10, 1978), October 16, 1978 (43 F.R. 48723 of October 19, 1978), February 14, 1979 (44 F.R. 10435 of February 20, 1979), May 16, 1979 (F.R. 29740 of May 22, 1979), September 5, 1979 (44 F.R. 53112 of September 12, 1979), January 28, 1980 (45 F.R. 7648 of February 4, 1980), February 1, 1980 (45 F.R. 8168 of February 6, 1980), May 20, 1980 (45 F.R. 36231 of May 29, 1980), May 23, 1980 (45 F.R. 36230 of May 29, 1980) and August 20, 1980 (45 F.R. 57228 of August 27, 1980) the Commission identified those chapters which had been considered by the Harmonized System Committee, and the chapters for which a Technical Team draft had been released.

Following its deliberations on the draft chapters, the Harmonized System Committee forwarded recommended texts for the chapters to the Nomenclature Committee. The Nomenclature Committee, which supervises the operations of the Convention on Nomenclature for the Classification of Goods in Customs Tariffs and is responsible for ensuring international uniformity in the interpretation and application of the CCCN, reviews the recommended texts for the Harmonized System and returns the draft chapters which it has approved to the Harmonized System Committee. The draft chapters which have thusly been provisionally approved by both committees are then held in

abeyance pending final revision sessions. The Harmonized System Committee began final revision sessions in May 1981.

The draft chapters released for public comment today have been provisionally adopted by the Harmonized System Committee and the Nomenclature Committee according to the above described procedure and are on the Harmonized System Committee's agenda for the October 1981 revision session. As further chapters are adopted, the Commission will issue future notices requesting public comment.

In 1971, the Department of the Treasury established an Interagency Advisory Committee on Customs Cooperation Council Matters in order to provide a basis for interested Federal agencies to participate with respect to CCC matters. In order to establish and develop U.S. programs and policies with respect to the Harmonized System, the interagency committee has instituted procedures which take into account the provisions of section 608(c) of the Trade Act of 1974, which call for the Commission to contribute to the U.S. technical input to the Harmonized System Committee. Under these procedures the Commission is preparing technical comments and proposals on the various chapters of the Harmonized System for consideration by the interagency committee in the determination of U.S. proposals with respect to the Harmonized System. In making proposals, the Commission is seeking and taking into consideration the views of trade and industry and other interested parties and of interested Government agencies.

By order of the Commission.

Issued: July 17, 1981.

KENNETH R. MASON,
Secretary.

Investigation No. TA-203-12

CLOTHESPINS

Notice of Investigation and Hearing

ACENCY: United States International Trade Commission.

ACTION: Upon its own motion and on the basis of a petition filed on July 10, 1981, on behalf of Diamond International Corporation, Forster Manufacturing Company, National Clothespin Company and Penley Corporation, the Commission of July 20, 1981, instituted investigation No. TA-203-12 under section 203(i)(2) and 203(i)(3) of the Trade Act of 1974 (19 U.S.C. 2253 (i)(2) and (i)(3)) for the purpose of gathering information in order that it might advise the President of its judgment as to the probable economic effect on the

industry concerned of the extension, reduction, or termination of import relief presently in effect with respect to clothespins, spring type, of wood or plastics valued not over $1.70 per gross, provided for in item 790.05 of the Tariff Schedules of the United States (TSUS). Relief in the form of quantitative restrictions described in items 925.11, 925.12, and 925.13 of the Appendix to the TSUS is provided for in Presidential Proclamation 4640 (issued February 23, 1979). Import relief presently in effect with respect to such merchandise is scheduled to terminate at the close of business on February 22, 1982, unless extended by the President.

EFFECTIVE DATE: July 20, 1981.

FURTHER INFORMATION CONTACT: John MacHatton, Supervisory Investigator, telephone 202–523–0439 or Bill Schechter, Investigator, telephone 202–523–0300, U.S. International Trade Commission, 701 E Street NW., Room 341, Washington, D.C. 20436.

SUPPLEMENTARY INFORMATION:

Public hearing ordered. A public hearing in connection with this investigation will be held in Portland, Maine, at 10 a.m., e.d.t., on Monday, October 5, 1981, in the Holiday Inn West, 81 Riverside Street, Portland, Maine 04104. Requests for appearances at the hearing should be received in writing by the Secretary to the Commission at his office in Washington no later than the close of business on Monday, September 21, 1981.

Prehearing procedure. To facilitate the hearing process, it is requested that persons wishing to appear at the hearing submit prehearing briefs enumerating and discussing the issues which they wish to raise at the hearing. Nineteen copies of such prehearing briefs should be submitted to the Secretary to the Commission no later than the close of business on Monday, September 28, 1981. Copies of prehearing briefs submitted will be made available for public inspection in the Office of the Secretary. While submission of prehearing briefs does not prohibit submission of prepared statements in accordance with section 201.12(d) of the Commission's *Rules of Practice and Procedure* (19 CFR 201.12(d)), it would be unnecessary to submit such a statement if a prehearing brief is submitted instead. Oral presentations should, to the extent possible, be limited to issues raised in the prehearing briefs.

A prehearing conference will be held on Tuesday, September 22, 1981, at 10:00 a.m., e.d.t., in Room 117 of the U.S. International Trade Commission Building.

Persons not represented by counsel or public officials who have relevant matters to present may give testimony without regard to the suggested prehearing procedures outlined above.

Inspection of petition. The petition filed in this case is available for public inspection at the Office of the Secretary, U.S. International Trade Commission.

By order of the Commission.

Issued: July 21, 1981.

KENNETH R. MASON,
Secretary.

In the Matter of CERTAIN WET MOTOR CIRCULATING PUMPS AND COMPONENTS THEREOF	Investigation No. 337–TA–94

Notice of Commission Request for Comments Regarding Settlement Agreement

AGENCY: U.S. International Trade Commission.

ACTION: Request for public comment on proposed termination of investigation based on settlement agreement.

SUMMARY: The settlement agreement would result in the complete termination of this investigation. This notice requests comments from the public on the proposed settlement agreement within thirty (30) days of publication of this notice in the Federal Register.

DATES: Comments will be considered if received within 30 days of publication of this notice. Comments should conform with section 201.8 of the Commission's Rules of Practice and Procedure (19 CFR, §201.8), and should be addressed to Kenneth R. Mason, Secretary U.S. International Trade Commission, 701 E Street NW., Washington, D.C. 20436.

SUPPLEMENTARY INFORMATION: Complainant, Taco, Inc., and respondents, Grundfos A.S., Grundfos Pumps, Inc., and Curtis V. Givan, and the Commission Investigative Attorney have moved jointly for termination of this investigation on the basis of a settlement agreement. On June 30, 1981, the presiding officer recommended that the joint motion be granted.

Notice of the institution of the investigation was published in the Federal Register of December 31, 1980 (45 F.R. 86564).

SETTLEMENT AGREEMENT: The settlement agreement, with confidential business information deleted, provides as follows:

> ***This Agreement*** **entered into this 5th day of June in Zurich, Switzerland, among Taco, Inc., Grundfos Pumps, Inc., Grundfos A/S, Grundfos International A/S, Grundfos Holding A.G., and Curtis V. Givan.**

Whereas, the parties desire to settle their differences.

It Is Hereby Agreed:

1. The parties named above hereby release all other parties from any and all claims that may have accrued heretofore or that may presently exist, including but not limited to:

(a) Civil Action No. 81–0286 pending in the United States District Court for the District of Rhode Island.

(b) Civil Action No. C81–1257 pending in United States District Court for the Northern District of California.

(c) Investigation No. 337–TA–94 pending in United States International Trade Commission.

2. The parties shall file stipulations of dismissal in each of the above identified actions and shall take any other action necessary to accomplish the dismissal of such actions.

3. Taco, Inc., agrees not to bring suit against the Grundfos companies named above, as well as their subsidiaries and affiliates, based on United States patent No. 3,264,653 or its foreign equivalent patents, and agrees not to assert, or otherwise contend hereafter that any Grundfos pump is or was an infringement of the United States or foreign patent.

4. The Grundfos companies named above shall pay to Taco Inc. * * * within 30 days of the date of signing of this agreement. In making this judgment, Grundfos does not concede that it has committed any of the acts complained of in the above identified litigation, nor does Grundfos concede that the 3,264,653 patent is valid.

5. In the event any party chooses to make a press release or any other form of public statement, such release or statement shall state that they "have resolved their differences" and no other information concerning the settlement will be disclosed in public or in private except as lawfully required, especially for commercial purposes.

WRITTEN COMMENTS REQUESTED: In order to discharge its statutory obligation to consider the public interest, the Commission seeks written comments from interested persons regarding the effects of terminating this investigation on the basis of the settlement agreement on (1) the public health and welfare, (2) competitive conditions in the U.S. economy, (3) the production of like or directly competitive articles in the United States, and (4) U.S. consumers. All written comments must be filed with the Secretary to the Commission no later than 30 days after publication of this notice in the Federal Register. In addition, pursuant to 19 CFR §210.14(a)(2), the Commission has requested comments from the Department of

Health and Human Services, the Department of Justice, the Federal Trade Commission, and the U.S. Customs Service.

ADDITIONAL INFORMATION: The original and 19 copies of all written submissions must be filed with the Secretary to the Commission, 701 E Street NW., Washington, D.C. 20436, telephone (202) 523-0161. All comments must be filed no later than 30 days after publication of this notice in the Federal Register. Any person desiring to submit a document (or portion thereof) to the Commission in confidence must request *in camera* treatment. Such requests should be directed to the Secretary to the Commission and must include a full statement of the reasons the Commission should grant such treatment. The Commission will either accept the submission in confidence or return it. All nonconfidential written submissions will be available for public inspection at the Secretary's office.

FOR FURTHER INFORMATION CONTACT: William E. Perry, Esq., Office of the General Counsel, U.S. International Trade Commission, 701 E Street NW., Washington, D.C. 20436; telephone (202) 523-1693.

By order of the Commission.

Issued: July 21, 1981.

KENNETH R. MASON,
Secretary.

(332-129)

Monthly Report Providing Information on the U.S. Auto Industry

AGENCY: United States International Trade Commission.

ACTION: At the request of the Subcommittee on Trade, Committee on Ways and Means, U.S. House of Representatives, and in accordance with the provisions of section 322(b) of the Tariff Act of 1930, as amended (19 U.S.C. 1332(b)), the Commission has instituted investigation No. 332-129, for the purpose of providing monthly data on the U.S. automobile industry through December 1981. The monthly reports will include data on automobile production, imports, exports, inventories, retail sales, price adjustments, and employment. The report will also include retail prices of selected comparable Japanese and U.S. produced automobiles on a monthly basis.

The reports issued under this investigation will be similar in scope to those issued under recently completed investigation No. 332-121, of like title. Notice of that investigation was published in the Federal Register of January 7, 1981 (46 F.R. 1849).

EFFECTIVE DATE: July 20, 1981.

FOR FURTHER INFORMATION CONTACT: Mr. James McElroy or Mr. Charles West, Machinery and Equipment Division, Office of Industries, U.S. International Trade Commission, Washington, D.C. 20436 (Telephone 202-523-0258, 202-523-0299, respectively).

By order of the Commission.

Issued: July 22, 1981.

KENNETH R. MASON,
Secretary.

In the Matter of
CERTAIN UNIVERSAL JOINT KITS, COMPONENTS THEREOF, AND TRUNNION SEALS THEREWITH } Investigation No. 337-TA-93

Notice of Proposed Settlement Agreement and Request for Public Comments

AGENCY: U.S. International Trade Commission.

ACTION: Notice is hereby given that the presiding officer in the above-captioned investigation has certified to the Commission for action a joint motion to terminate the investigation, along with a proposed settlement agreement executed by the complainant and the respondents. Before taking final action on the proposed settlement, the Commission requests that interested members of the public submit written comments thereon.

SUPPLEMENTARY INFORMATION:

Background. On May 26, 1981, the complainant, GMB Universal Joints Inc., GMB Universal Joints (West) Inc., and Naniwa Seimitsu Industry Co., Ltd., and the Commission investigative attorney jointly moved, pursuant to rule 201.51(a) of the Commission's Rules of Practice and Procedure (19 CFR § 210.51(a)), to terminate the investigation. The joint motion to terminate is based on a voluntary settlement agreement, executed by all the parties, which is alleged to resolve the various issues in this investigation.

On June 8, 1981, the presiding officer filed a recommended determination in which he recommended that Motion No. 93-7 be granted. The judge noted that there are no agreements or understandings between the parties other than those embodied in the proposed settlement agreements and that it does not appear from the face of the agreement that the public interest will be harmed by the settlement.

The proposed settlement agreement is appended to this notice.

Submission of Comments. All comments should be addressed to

the Secretary, U.S. International Trade Commission, 701 E Street NW., Washington, D.C. 20436, and must reference investigation No. 337-TA-93. Comments must be received not later than 30 days after the date of publication of this notice in the Federal Register.

FOR FURTHER INFORMATION CONTACT: Jack Simmons, Esq., Office of the General Counsel, U.S. International Trade Commission, telephone (202) 523-0350.

By order of the Commission.

Issued: July 22, 1981.

KENNETH R. MASON,
Secretary.

SETTLEMENT AGREEMENT

Whereas, Dana Corporation, a Virginia corporation, the principal office of which is in Toledo, Ohio ("Dana"), filed a Complaint with the International Trade Commission ("ITC") on September 15, 1980 ("Complaint"), and amended such Complaint on November 17, 1980 and sought among other relief the exclusion from the United States of universal joint kits manufactured by Naniwa Seimitsu Industry Co., LTD., a Japanese enterprise, the principal office of which is in Osaka, Japan ("Naniwa"), and imported into the United States by GMB Universal Joints, Inc., a New Jersey corporation, the principal office of which is in Avenel, New Jersey ("GMB East"), and GMB Universal Joints (West) INC., a California corporation, the principal office of which is in El Segundo, California ("GMB west"); and

Whereas, immediately after the execution of this Agreement, Dana and Naniwa, GMB East and GMB West intend to make a Joint Motion with the ITC Investigative Attorney, David J. Dir, Esq., to terminate ITC Investigation No. 337-TA-93 ("Investigation") which was commenced in response to the Complaint, as amended;

Now, Therefore, in consideration of and in exchange for their respective agreements contained herein, Dana and Naniwa, GMB East and GMB West, hereby agree as follows:

1. Naniwa, GMB East and GMB West (hereinafter collectively "Naniwa and Affiliates") acknowledge that the universal joint trunnion seals referred to in the Complaint, as amended, and described in Exhibit A attached hereto ("Model No. 1 Seals") are covered by the claims of United States Patent No. 3,479,840 ("Dana's Patent").

2. After September 1, 1981, Naniwa and Affiliates will not import into the United States universal joints containing either Model No. 1 Seals (as described in Exhibit A attached hereto) or trunnion seals manufactured in accordance with the design attached as Exhibit B hereto ("Model No. 2 Seals") until Dana's Patent either expires or is

finally declared to be invalid or unenforceable by a Court of competent jurisdiction from which no appeal has been taken; provided, however, that if Naniwa and Affiliates have made reasonable efforts to manufacture (or have manufactured) trunnion seals according to the design attached as Exhibit C hereto ("Model No. 3 Seals") for commercial production and export to the United States, and commercial production and export to the United States are not yet commercially feasible, Naniwa and Affiliates may ask Dana to extend such September 1, 1981 deadline for an additional reasonable period, and Dana's consent to such request shall not be unreasonably withheld.

3. Dana will not instigate any proceeding with the ITC or bring any action in any forum based on or arising out of any one or more claim(s) of Dana's patent against Naniwa, GMB East and/or GMB West or any of their suppliers or customers either for manufacture, use or sale of Model No. 1 or Model No. 2 Seals imported into the United States on or before September 1, 1981 or such later deadline as Dana shall consent to in accordance with Paragraph 2 above, or for manufacture, use or sale of Model No. 3 Seals imported into the United States at any time.

4. GMB East and GMB West are currently reviewing the trade nomenclature for their products for unrelated business reasons and may (or may not) change such nomenclature in the future.

5. Immediately following the execution of this Agreement, Dana and Naniwa, GMB East and GMB West shall jointly make a Motion, together with the ITC Investigative Attorney, to terminate the Investigation ("Motion"), including all matters alleged in the Complaint, as amended, and in the Response thereto.

6. This Settlement Agreement is the only agreement between Dana and Naniwa, GMB East and GMB West relating to the Investigation, and there are no other agreements or understandings between the parties in connection with the Investigation.

7. The consideration received by Dana and Naniwa, GMB East and GMB West pursuant to this agreement in the form of their respective agreements contained herein (including this reciprocal general release) shall constitute full payment, satisfaction, discharge, compromise and release by Dana to Naniwa and Affiliates individually and collectively and by Naniwa and Affiliates individually and collectively to Dana of any and all claims, demands, damages, attorneys' fees, costs, expenses, sums of money, actions, causes of action (both at law and in equity, including but not limited to any or all causes of action arising under 35 U.S.C. §§ 271 and 282 and under 19 U.S.C. § 1337), obligations or liabilities of every kind or nature whatsoever, wherever arising, whether known or unknown, which exist or existed on or prior to the Effective Date (as herein-

after defined) of this agreement which Dana and Naniwa and Affiliates, their officers, directors, employees, agents, representatives, successors and assigns have ever had, now have or shall have (or have claimed, now claim or shall claim to have) on or before the Effective Date against each other (in the case of Naniwa and Affiliates either individually or collectively) and/or any of each others' officers, directors, employees, agents, representatives, successors or assigns (in the case of Naniwa and Affiliates either individually or collectively).

Dana and Naniwa and Affiliates (individually and collectively) are not relying and have not relied on any representation or statement made by each other either with respect to the facts involved in the controversy being settled hereby ("Controversy") or with respect to their rights or asserted rights. Each party assumes the risk of any mistakes of fact in connection with the true facts involved in the Controversy, and any facts which are now unknown to them relating thereto. Each party expressly waives all rights under any possibly applicable statute or regulation which might limit the scope of this general release, including § 1542 of the *California Civil Code* which provides:

> A general release does not extend to claims which the creditor does not know or suspect to exist in his favor at the time of executing the release, which if known by him must have materially affected his settlement with the debtor.

8. This Agreement shall become effective on the date the ITC formally terminates the Investigation in response to the Motion ("Effective Date").

In Witness Whereof duly authorized officers or representatives of the parties have executed this Agreement.

DANA CORPORATION,
RAYMOND J. PEAT,
Vice President Sales.

NANIWA SEIMITSU INDUSTRY CO., LTD.,
NICK MATSUOKA,
Director.

GMB UNIVERSAL JOINTS, INC.,
KYOSUNG KOO,
Vice President.

GMB UNIVERSAL JOINTS (WEST) INC.,
J. ROBERT MATHESON,
Vice President.

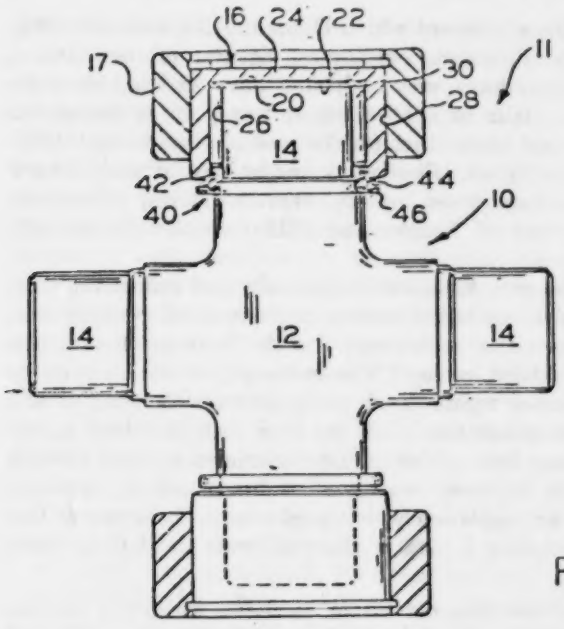
16
24
22
17
11
30
20
28
26
14
42
44
40
46
10
14
12
14

FIG. 1

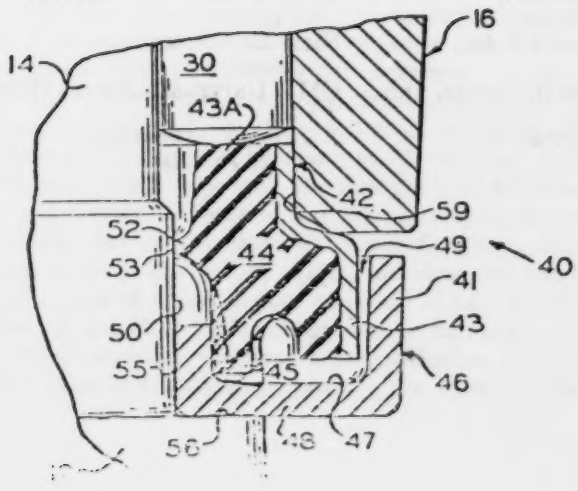
16
14
30
43A
42
59
52
49
40
53
44
41
50
43
55
45
46
56
48
47

EXHIBIT I

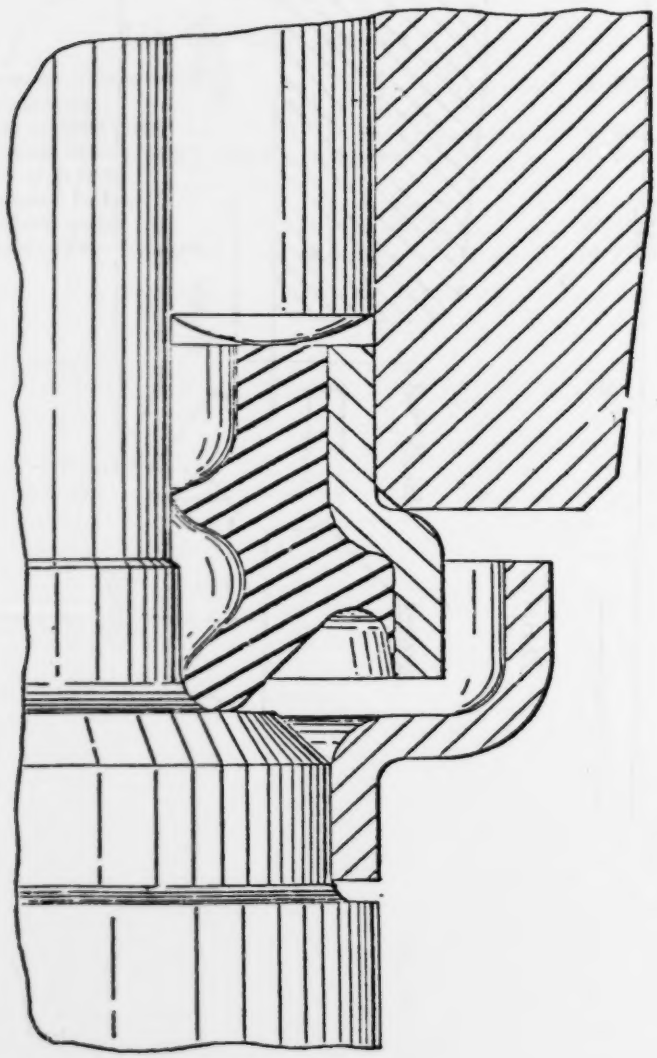

EXHIBIT C

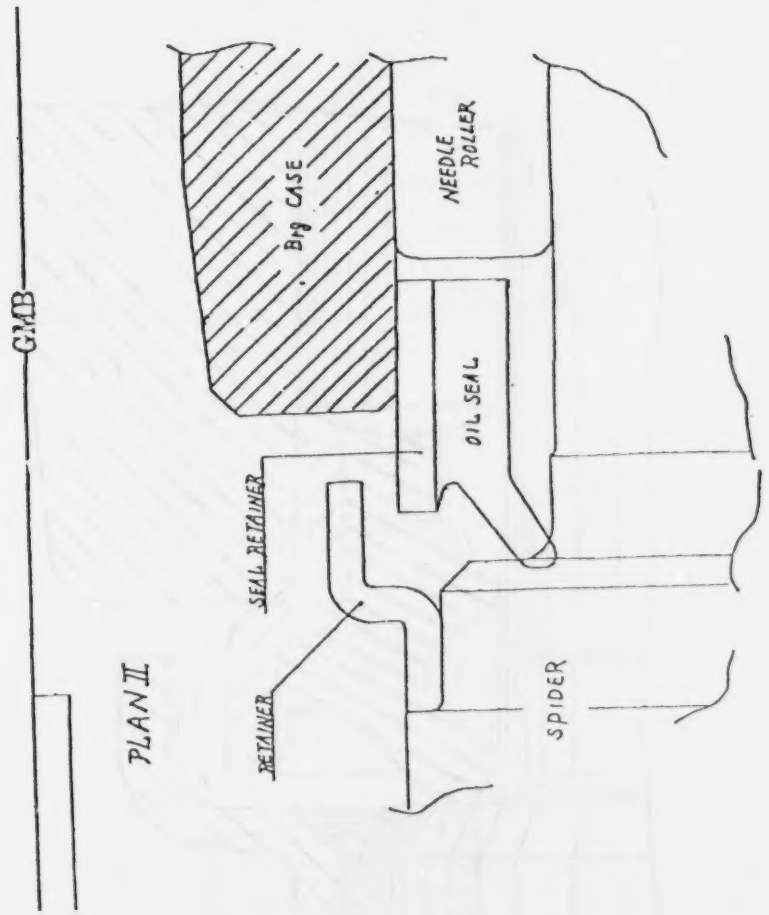
GMB
PLAN II
Brg CASE
NEEDLE ROLLER
OIL SEAL
SEAL RETAINER
RETAINER
SPIDER

Index

U.S. Customs Service

Treasury decisions: Carrier bonds 81-203
Foreign currencies:
Daily certified rates 81-205
Variances from quarterly rates 81-204
Restrictions on entry:
Singapore, cotton 81-210
Thailand, cotton 81-202
Synopses of drawback decisions 81-200

U. S. GOVERNMENT PRINTING OFFICE : 1981 O - 350-342

DEPARTMENT OF THE TREASURY
U.S. CUSTOMS SERVICE
WASHINGTON, D.C. 20229

OFFICIAL BUSINESS
PENALTY FOR PRIVATE USE, $300

POSTAGE AND FEES PAID
DEPARTMENT OF THE TREASURY (CUSTOMS)
(TREAS. 552)

15/33

Customs Bulletin

Regulations, Rulings, Decisions, and Notices concerning Customs and related matters

and Decisions

of the United States Court of Customs and Patent Appeals and the United States Court of International Trade

Vol. 15 AUGUST 17, 1981 No. 33

NEWARK PUBLIC LIBRARY
SEP 2 1981
U. S. GOVT. PUBS.
DEPOSITORY 376

This issue contains

T.D. 81-206 Through 81-210
C.S.D. 81-171 Through 81-180
Erratum
Slip Op. 81-66
Protest Abstracts P81/124 and P81/125
Reap. Abstracts R81/270 Through R81/275
International Trade Commission Notices

THE DEPARTMENT OF THE TREASURY
U.S. Customs Service

T1.11/3:

NOTICE

The abstracts, rulings, and notices which are issued weekly by the U.S. Customs Service are subject to correction for typographical or other printing errors. Users may notify the U.S. Customs Service, Logistics Management Division, Washington, D.C. 20229, of any such errors in order that corrections may be made before the bound volumes are published.

For sale by the Superintendent of Documents, U.S. Government Printing Office, Washington, D.C. 20402. Price: $2.25 (single copy domestic); $2.85 (single copy foreign). Subscription price: $85.00 a year domestic; $106.25 a year foreign.

U.S. Customs Service

Treasury Decisions

(T.D. 81-206)

Bonds

Approval and discontinuance of carrier's bonds, Customs Form 3587

Bonds of carriers for the transportation of bonded merchandise have been approved or discontinued as shown below. The symbol "D" indicates that the bond previously outstanding has been discontinued on the month, day, and year represented by the figures which follow. "PB" refers to a previous bond, dated as represented by figures in parentheses immediately following, which has been discontinued. If the previous bond was in the name of a different company or if the surety was different, the information is shown in a footnote at the end of the list.

Dated: July 30, 1981.

Name of principal and surety	Date of bond	Date of approval	Filed with district director/area director/amount
A.T.F. Trucking Co., Inc., Rt. 11, Box 507-B, Birmingham, AL; motor carrier; Ins. Co. of North America.	May 29, 1981	June 17, 1981	Mobile, AL $25,000
Ace Air Cargo Express, Inc., d.b.a. Ace Cargo Service, 6410 Eastland Rd., Suite F, Brookpark, OH; air carrier; St. Paul Fire & Marine Ins. Co. D 6/17/81.	Jan. 14, 1981	Jan. 19, 1981	Cleveland, OH $50,000
Arkansas Best Freight Systems, Inc., 1000 S. 21st St., Fort Smith, AR; motor carrier; Fidelity & Deposit Co. of MD. (PB 9/15/70) D 6/10/81 [1]	June 10, 1981	June 10, 1981	New Orleans, LA $25,000
Associated Truck Lines, Inc., One Vanderberg Center, Grand Rapids, MI; motor carrier; Safeco Ins. Co. of America. (PB 7/27/75) D 6/13/81 [2]	June 4, 1981	June 13, 1981	Detroit, MI $50,000
Auto Driveaway Co., 310 S. Michigan Ave., Chicago, IL; motor carrier; Transamerica Ins. Co.	June 30, 1981	July 7, 1981	Chicago, IL $25,000
Baltimore-Washington Express Service, Inc., 3605 Benson Ave., Baltimore, MD; motor carrier; The American Ins. Co. D 8/10/81	July 24, 1979	Sept. 5, 1979	Baltimore, MD $25,000

See footnotes at end of table.

Name of principal and surety	Date of bond	Date of approval	Filed with district director/area director/amount
Hugh Michael Clark, d.b.a. Clark Transportation, 1547 Lori Ave., Sarnia, ON Canada; motor carrier; The Travelers Indemnity Co.	May 6, 1981	July 13, 1981	Laredo, TX $25,000
General Highway Express, Inc., 2280 Industrial Dr., P.O. Box 727, Sidney, OH; motor carrier; Fireman's Fund Ins. Co. (PB 1/28/70) D 6/23/81	June 9, 1981	June 23, 1981	Cleveland, OH $50,000
Interstate Contract Carrier Corp., 2100 W. 2200 S., Salt Lake City, UT; motor carrier; St. Paul Fire & Marine Ins. Co.	Sept. 5, 1980	June 11, 1981	Los Angeles, CA $50,000
Larry Johnson, d.b.a. Larry Johnson Aircraft, P.O. Box 1389, McAllen, TX; air carrier; Fidelity & Deposit Co. of MD. D 6/15/81	June 11, 1979	July 24, 1979	Laredo, TX $25,000
Liquid Transporters, Inc., 1292 Fern Valley Rd., P.O.B. 36247, Louisville, KY; motor carrier; Insurance Co. of North America. (PB 6/21/71) D 7/7/81	June 21, 1981	July 7, 1981	Cleveland, OH $150,000
Marine Transport Co., P.O. Box 2142, Wilmington, NC; motor carrier; Washington International Ins. Co.	June 1, 1981	June 1, 1981	Wilmington, NC $25,000
Nebraska Bulk Transports, Inc., P.O. Box 215, Bennet, NB; motor carrier; Aetna Casualty & Surety Co.	May 1, 1981	June 26, 1981	Chicago, IL $25,000
Ohio Container Service, Inc., 2701 Lakeside Ave., Cleveland, OH; motor carrier; St. Paul Fire & Marine Ins. Co. (PB 4/11/79) D 6/17/81 [3]	May 1, 1981	June 17, 1981	Cleveland, OH $100,000
Ozark Air Lines, Inc., Lambert-St. Louis International Airport, St. Louis, MO; air carrier; North River Ins. Co. (PB 2/4/80) D 6/1/81 [4]	June 1, 1981	June 1, 1981	St. Louis, MO $25,000
Redwing Carriers, Inc., 8515 Palm River Rd., Tampa, FL.; motor carrier; Ins. Co. of North America. D 7/2/81	June 1, 1973	June 1, 1973	Tampa, FL $25,000
Sherwood Hume Transportation Ltd., 141 Healey Rd., P.O. Box 644, Bolton, Ontario, Canada; motor carrier; Hartford Fire Ins. Co.	Oct. 8, 1980	June 8, 1981	Buffalo, NY $25,000
Wallace Colville Motor Freight Inc., N. 404 Sycamore, Spokane, WA; motor carrier; Safeco Ins. Co. of America. (PB 8/1/72) D 6/8/81 [5]	Sept. 23, 1980	June 8, 1981	Seattle, WA $25,000
West Coast Warehouse Corp., P.O. Box 258, Long Beach, CA; motor carrier; St. Paul Fire & Marine Ins. Co. (PB 11/15/76) D 5/28/81 [6]	May 8, 1981	May 29, 1981	Los Angeles, CA $50,000
West Shore Transport Co., Inc., P.O. Box 765, Hammond, IN; motor carrier; The North River Ins. Co. D 5/22/81.	Nov. 6, 1978	Nov. 6, 1978	Milwaukee, WI $25,000

See footnotes at end of table.

Name of principal and surety	Date of bond	Date of approval	Filed with district director/area director/amount
William J. Call, d.b.a. Wisconsin Cartage Co., 1121 W. Grange Ave., Milwaukee, WI; motor carrier; The Ohio Casualty Ins. Co.	Apr. 6, 1981	May 22, 1981	Milwaukee, WI $25,000

[1] Surety is Fireman's Fund Ins. Co.
[2] Surety is Protective Ins. Co.
[3] Surety is Washington International Ins. Co.
[4] Surety is Safeco Ins. Co. of America.
[5] Surety is Royal Indemnity Co.
[6] Surety is Fireman's Fund Ins. Co.

BON-3-03

MARILYN G. MORRISON,
Director,
Carriers, Drawback and Bonds Division.

(81-207)

Reimbursable Services—Excess Cost of Preclearance Operations

DEPARTMENT OF THE TREASURY,
OFFICE OF THE COMMISSIONER OF CUSTOMS,
Washington, D.C., August 3, 1981.

Notice is hereby given that pursuant to section 24.18(d), Customs Regulations (19 CFR 24.18(d)), the biweekly reimbursable excess costs for each preclearance installation are determined to be as set forth below and will be effective with the pay period beginning August 23, 1981.

Installation:	*Biweekly excess cost*
Montreal, Canada	$17,717
Toronto, Canada	31,795
Kindley Field, Bermuda	6,747
Nassau, Bahama Islands	17,244
Vancouver, Canada	12,139
Winnipeg, Canada	2,113
Freeport, Bahama Islands	13,323
Calgary, Canada	10,027
Edmonton, Canada	4,756

JACK T. LACEY,
Comptroller.

Published in the Federal Register August 7, 1981 (46 FR 40362)

(T.D. 81-208)

Foreign Currencies—Daily Rates For Countries Not on Quarterly List

The Federal Reserve Bank of New York, pursuant to section 522(c), Tariff Act of 1930, as amended (31 USC 372(c)), has certified buying rates for the dates and foreign currencies shown below. The rates of exchange, based on these buying rates, are published for the information and use of Customs officers and others concerned pursuant to Part 159, Subpart C, Customs Regulations (19 CFR 159, Subpart C).

Argentina peso:	
July 20–23, 1981	$0.000214
July 24, 1981	.000211
Chile peso:	
July 20–24, 1981	$0.025667
Colombia peso:	
July 20–24, 1981	$0.018403
Greece drachma:	
July 20, 1981	$0.167736
July 21, 1981	.016611
July 22, 1981	.016667
July 23, 1981	.016750
July 24, 1981	.016736
Indonesia rupiah:	
July 20–24, 1981	$0.001585
Israel shekel:	
July 20–24, 1981	$0.082645
Peru sol:	
July 20–23, 1981	$0.002370
July 24, 1981	.002342
South Korea won:	
July 20–24, 1981	$0.001456

(LIQ-03-01 O:C:E)

Date: July 24, 1981.

KENNETH A. RICH,
Acting Chief,
Customs Information Exchange.

(T.D. 81-209)

Foreign Currencies—Variances From Quarterly Rate

The following rates of exchange are based upon rates certified to the Secretary of the Treasury by the Federal Reserve Bank of New York, pursuant to Section 522(C), Tariff Act of 1930, as amended (31 USC 372(c)), and reflect variances of 5 per centum or more from the quarterly rate published in Treasury Decision for the following countries. Therefore, as to entries covering merchandise exported on the dates listed, whenever it is necessary for Customs purposes to convert such currency into currency of the United States, conversion shall be at the following rates.

South Africa rand:	
July 20–23, 1981	Quarterly
July 24, 1981	$1.0617
Thailand baht (tical):	
July 20–24, 1981	$0.043384

(LIQ-03-01 O:C:E)

Date: July 24, 1981.

KENNETH A. RICH,
Acting Chief,
Customs Information Exchange.

(T.D. 81-210)

Bonds

Approval and discontinuance of bonds on Customs Form 7587 for the control of instruments of international traffic of a kind specified in section 10.41a of the Customs Regulations.

Bonds on Customs Form 7587 for the control of instruments of international traffic of a kind specified in section 10.41a of the Customs Regulations have been approved or discontinued as shown below. The symbol "D" indicates that the bond previously outstanding has been discontinued on the month, day, and year represented by the figures which follow. "PB" refers to a previous bond, dated as represented by the figures in parentheses immediately following which has been discontinued. If the previous bond was in the name of a different

company or if the surety was different, the information is shown in a footnote at the end of the list.

Dated: August 4, 1981.

Name of principal and surety	Date of bond	Date of approval	Filed with district director/area director/amount
Aerospatiale Helicopter Corp., 2701 Forum Drive, Grand Prairie, TX; Washington International Ins. Co.	May 7, 1981	May 14, 1981	New York Seaport $10,000
Allied Intercontinental Agency, Inc., 39 Broadway, New York, NY; Investors Ins. Co. of America. (PB 2/26/79) D 2/26/81.[1]	Feb. 26, 1981	Feb. 26, 1981	New York Seaport $10,000
American Oceanic Shipping Corp., 50 Broad St., New York, NY; Washington International Ins. Co.	May 21, 1981	May 22, 1981	New York Seaport $10,000
Boke Trading, Inc. (a PA corp.), 500 Two Allegany Center, Pittsburgh, PA; Investors Ins. Co. of America.	May 12, 1981	May 12, 1981	Wilmington, NC $10,000
China Ocean Shipping Co., 200 Carondelet St., New Orleans, LA; Washington International Ins. Co.	July 8, 1981	July 10, 1981	New Orleans, LA $10,000
Clou Containers Inc. and its wholly owned sub: compass Container Inc., 17 Battery Place, New York, NY; Washington International Ins. Co. (PB 3/17/80) D 6/19/81[2]	June 15, 1981	June 19, 1981	New York Seaport $10,000
Consafe, Inc., P.O. Box 40339, Houston, TX; Old Republic Ins. Co.	Apr. 27, 1981	Apr. 27, 1981	New Orleans, LA $10,000
Container-Lloyd (USA) Inc., and/or Container-Lloyd Leasing Div. of Container-Lloyd (USA) Inc., 140 S. Dearborn St., Chicago, IL; Insurance Co. of North America. D 1/27/81	Jan. 21, 1977	Jan. 21, 1977	Chicago, IL $10,000
Dalton Steamship Corp., 736 Union St., New Orleans, LA; Washington International Ins. Co.	June 4, 1981	June 4, 1981	New Orleans, LA $10,000
Gdynia America Line Inc., One World Trade Center, New York, NY; Investors Ins. Co. of America. (PB 4/30/75) D 4/30/81[3]	May 1, 1981	May 1, 1981	New York Seaport $10,000
Jack B. Kelly Inc., 66 West Kelly Dr., Amarillo, TX; Peerless Ins. Co. D 6/13/81	Mar. 15, 1978	Mar. 15, 1978	New York Seaport $10,000
Meadows Wye & Co., Inc., 111 Broadway, New York, NY; Peerless Ins. Co. (PB 3/1/79) D 3/1/81[4]	Mar. 2, 1981	Mar. 2, 1981	New York Seaport $10,000
Pacific Mexico Container Line (Paxicon), Inc., (a Calif. corp.), 300 Montgomery St., San Francisco, CA; Washington International Ins. Co.	Apr. 1, 1981	Apr. 1, 1981	Los Angeles, CA $50,000
Pacific Northwest Equipment Co., 1440 S. Jackson St., Seattle, WA; Washington International Ins. Co.	Apr. 1, 1981	June 16, 1981	Seattle, WA $10,000
Peninsula Plywood Corp., Port Angeles, WA; Federal Ins. Co. D 6/10/81	Apr. 15, 1968	Apr. 30, 1968	Seattle, WA $10,000

See footnotes at end of table.

Name of principal and surety	Date of bond	Date of approval	Filed with district director/area director/amount
Rio Grande Foods, Inc., 3701 W. Military Hwy., McAllen, TX; St. Paul Fire & Marine Ins. Co.	Mar. 27, 1979	Aug. 14, 1980	Laredo, TX $10,000
San Juan Cement Co., Inc., Km. 26.7, State Hwy. No. 2, Dorado, PR; Continental Casualty Co.	Apr. 3, 1981	Apr. 6, 1981	San Juan, PR $10,000

[1] Surety is Old Republic Ins. Co.
[2] Principal is Clou Containers Inc.; Surety is Old Republic Ins. Co
[3] Surety is Peerless Ins. Co.
[4] Surety is Old Republic Ins. Co.

BON-3-10

MARILYN G. MORRISON,
Director,
Carriers, Drawback and Bonds Division.

U.S. Customs Service

Customs Service Decisions

DEPARTMENT OF THE TREASURY,
OFFICE OF THE COMMISSIONER OF CUSTOMS,
Washington, D.C., August 3, 1981.

The following are decisions made by the United States Customs Service where the issues involved are of sufficient interest or importance to warrant publication in the Customs Bulletin.

DONALD W. LEWIS,
Director,
Office of Regulations and Rulings.

(C.S.D. 81-171)

Vessels: Vessels Used to Transport Offshore Fishing Parties from a United States Port and Back Constitutes Coastwise Trade

Date: January 15, 1981
File: VES-3-02-CO:R:CD:C
104932 PH

This responds to your letter of October 22, 1980, concerning the use of vessels to carry six or less passengers for hire in Michigan waters. In our letter of August 1, 1980 (VES-3-02-RRUCDC 104767 PH), we supplied you with general information on this subject.

You state that the vessels under consideration were built in the United States, are owned by United States citizens, and are between 5 and 20 net tons. The vessels carry 6 or less passengers for hire on fishing parties, excursions, and other activities. You describe a sample itinerary for one of the vessels as follows: The vessel departs port "A" at 7 a.m., navigates out onto a Great Lake less than 20 miles and may or may not cross state lines or international boundaries, and returns to port "A" at 1 p.m. or 5 p.m., depending on whether the trip is for a half-day or whole day. You contend that these vessels are not engaged in the coastwise trade and, therefore, are not required to be documented.

As Mr. Joseph A. Yglesias of the U.S. Coast Guard stated in his letter to you of June 26, 1980, a copy of which he forwarded to us, the Customs Service is responsible for determining whether or not a particular use of a vessel is coastwise trade. Based on our determination, the Coast Guard decides what, if any, documentation is required of the vessel.

In your letter, you note that we nave ruled that the transportation by a foreign-built vessel of passengers to the high seas or foreign waters and back to the port of embarkation is not considered coastwise trade. This position is based upon an opinion of the Attorney General (29 O.A.G. 318 (1912)), which you cite.

You contend that if the transportation described in the previous paragraph is not considered coastwise trade for a foreign-built vessel, it should not be considered coastwise trade for a United States-built vessel. You are correct. Transportation of passengers from a United States port to the high seas or foreign waters and back to the port of embarkation is not considered coastwise trade whether performed by a foreign-built or United States-built vessel.

The transportation described by you, however, appears to involve voyages in which passengers are transported solely in United States territorial waters and returned to the port of embarkation. The Attorney General's opinion did not address such transportation. The material you quoted on this subject (incorrectly attributed by you to Justice McKenna in his opinion in *United States* v. *Baltimore and Ohio Southwestern Railroad Co.*, 222 U.S. 8; the quoted material is actually from the text of the Attorney General's opinion (29 O.A.G. 318, at 321)) concerns transportation which is "not coastwise, but outward, *into foreign waters* * * *." (Emphasis added.)

On June 11, 1900, the Treasury Department ruled that the use of a Canadian vessel for the purpose of taking passengers on "short excursions" from the port of Duluth and back contravened the provisions of 46 U.S.C. 289 (T.D. 22275, copy enclosed). We note that it is approximately 150 miles from Duluth to the international boundary in Lake Superior and, therefore, assume that these "short excursions" did not encompass transportation to the high seas or foreign waters. Thus, transportation of passengers from a United States port solely into territorial waters and back to the port of embarkation has been considered coastwise trade at least since 1900. We have been unable to find any ruling after the 1900 decision which holds such transportation to be other than coastwise trade. In fact, our rulings consistently follow the position enunciated in that decision. Accordingly, it is our conclusion that although the transportation of passengers from a United States port to the high seas or foreign waters and back to the port of embarkation is not considered coastwise trade, the trans-

portation of passengers from a United States port on a voyage *solely* within United States territorial waters and back to the port of embarkation is considered coastwise trade.

You also state that you seriously doubt the validity of Treasury Decision 55193(2), under which operations of vessels carrying offshore fishing parties for hire, whether or not the trips extend beyond territorial waters, are considered to be predominantly coastwise in nature. This position is based on a ruling by the predecessor to the Customs Service in the administration of the coastwise and other navigation laws. (See, Bureau of Navigation and Steamboat Inspection Circular Letter No. 103, June 3, 1936, copy enclosed, in which it was held that "a vessel employed in the business of taking out fishing parties is not construed as engaged in the fisheries and should be licensed only for the coasting trade * * *.") The position stated in Treasury Decision 55193(2) has been followed consistently since its publication in 1960. Accordingly, it continues to be our position that vessels used to transport offshore fishing parties from a United States port and back to the port of embarkation are considered to be engaged in coastwise trade whether the vessels transport the fishing parties solely within United States territorial waters or to the high seas or foreign waters.

If you have any further questions concerning this matter, please feel free to call upon us.

(C.S.D. 81-172)

Classification: Exemption From Quota Restraints, Pursuant to Item 950.10D, TSUS, Soft Ripened Cheeses Made From Mixtures of Cow's Milk and Other Animals

Date: February 10, 1981
File: CLA-2:CO:R:CV:G
065783 LCS

This is reply to your letter of November 26, 1980, in which you requested Headquarters, United States Customs Service, to issue a ruling interpreting the provisions of item 950.10D, Tariff Schedules of the United States (TSUS), in such a way so as to preclude the imposition of quota restraints on importations of soft ripened cheeses made from a mixture of cow's milk and milk from other animals, notably goat's and sheep's milk.

Item 950.10D, TSUS, provides that:

> [c]heeses and substitutes for cheese provided for in items 117.75 or 117.88, [TSUS], (*except* cheese not containing cow's milk and *soft ripened cow's milk cheese* * * *) [emphasis provided]

shall be subject to the quota quantities, allocated by country, provided for therein.

Items 117.75 and 117.88, TSUS, provide for other cheeses and substitutes for cheese, other than sheep's milk cheese:

(1) valued not over 25 cents per pound; and
(2) valued over 25 cents per pound and other than Colbey or specific named cheeses made from cow's milk, respectively.

Accordingly, the United States Customs Service has, pursuant to these provisions, subjected certain entries (approximately 3 as of June 25, 1980) of soft ripened cheese made from a combination of cow's milk and other milk to quota restraint pursuant to item 950.10D, TSUS, since they were not "soft ripened cow's milk cheese," as they contained other milk as well, and since they were not "cheese *not* containing cow's milk."

It is your position, supported by our National Import Specialist at New York, that is was not the intention of the Multilateral Trade negotiators, or of those formulating the United States position prior to those negotiations (conducted and finalized in Brussels, Belgium, in March, 1979), for such a result and that the exemption for soft ripened cheeses from the quota restraints in item 950.10D, TSUS, was intended to apply without restriction to the kind of milk or milks from which such soft ripened cheeses were made.

We have been informed that the Customs Laboratory can determine the animal source or sources of milks contained in cheeses made from a mixture of milks; however, it cannot quantify the amount by percentage of each milk constituting such a cheese.

Based on information now before this Headquarters, it is obvious that the intent of the United States delegation to the Multilateral Trade Negotiations (MTN, together with its advisors in formulating this position, and their counterparts from the European Economic Community) was clearly to exempt from quota restraint, pursuant to item 950.10D, TSUS, soft ripened cheeses made from mixtures of cow's milk and the milk of other animals. This determination is further supported by the fact that soft ripened cheeses and substitutes for cheese wholly of cow's milk or wholly of milk from other animals, classifiable under either items 117.75 or 117.88, TSUS, are exempt from quota restraint pursuant to item 950.10D, TSUS.

Therefore, to give force and effect to the intent of the MTN and to Presidential Proclamation 4708 of December 11, 1979, Headquarters, United States Customs Service, has determined that the exemptions from quota restraints applicable to: 1) soft ripened cow's milk cheese; or 2) cheeses not containing cow's milk, pursuant to item 950.10D, TSUS, shall be interpreted and applied to exempt from quota restraint under this provision soft ripened cheeses made

from mixtures of cow's milk and the milk of other animals (*e.g.*, sheep's and/or goat's milk) irrespective of the percentages of such milks present, insofar as the cheeses in question meet all other requirements of Headnote 3(a)(iv), Part 3, Appendix to the TSUS, defining the term "soft ripened cow's milk cheese."

(C.S.D. 81-173)

Drawback: Denial of Drawback, Pursuant to 19 CFR 22.13(a), When Claimant Fails to Make Timely Submission of Proof of Exportation or Certificates of Manufacture

Date: February 11, 1981
File: DRA-1-CO:R:CD:D B 211999

Re: Further review of Protest 28098-001280 of October 19, 1978 (Protests 28098-001435, -001394, -001381, and 001314 suspended)

REGIONAL COMMISSIONER OF CUSTOMS
San Francisco, CA.

DEAR SIR: These protests and request for further review were filed against your decision to liquidate 69 drawback entries filed during the period April 16, 1973 through November 4, 1974, "no drawback." The articles covered by the claim for drawback, pants pockets, were exported in 1971 and 1972.

ISSUE

Based on the facts presented, was the drawback claimant entitled to an extension of the 3-year period after exportation in which drawback claims must be completed by filing of an entry and certificate of manufacture?

FACTS

The protestant received approval of a drawback proposal on December 11, 1973. The approved contract covered cotton drill which was to be cut into pants pockets, upon which drawback would be claimed upon exportation. Sixty-nine drawback entries were filed during the above-noted period along with two certificates of manufacture. The drawback entries upon examination were found to be lacking certificates from the Government waiving drawback, as required by section 22.42 of the regulations, notices of exportation or bills of lading as required by section 22.7 of the regulations, and certificates of manufacture or reference to certificates of manufacture numbers covering the exported pockets.

Not having received proof of exportation or certificates of manufacture, the Regional Commissioner advised the protestant by letter of December 29, 1977, that drawback could not be allowed on the 69 entries. After conversations with protestant's counsel, regional

liquidators agreed on February 14, 1978 to suspend action pending a study of which records would be acceptable to establish timely use of the drill under drawback regulations. No further information was forthcoming and the entries were sent to liquidation, where the claims were liquidated "no drawback" in July 1978. Timely protests were filed. A denial was issued in 2809–8–001280 and the remainder were suspended pending further review of that protest.

LAW AND ANALYSIS

Section 22.13(a), Customs Regulations, provides in pertinent part:

> A drawback entry and certificate of manufacture shall be filed within 3 years after the date the articles were exported. . . . Claims not completed within the 3-year period prescribed above shall be treated as abandoned and no extension will be granted, unless it is established that failure to complete the claim within 3 years was occasioned by the action of a responsible Customs officer.

Counsel claims that had the letter of December 29, 1977 referred to under FACTS been sent earlier, immediately after the claims were filed, proper documentation would have been submitted by the protestant. This is an indirect argument that Customs personnel did not notify protestant of the entries' inadequacies until after the 3-year period had run.

The first entry was filed with the District Director on August 4, 1974, and we must assume all entries were timely. The District forwarded the entries to the Region and according to the file counsel for protestant was contacted by phone in August, 1974, and again in December 1974, regarding exportation certification. The Region returned the drawback entries to the District Director on November 11, 1974, with directions to have protestant indicate a Certificate of Manufacture for the exported articles and to furnish the Government certificate required by section 22.42 of the regulations. It is not clear when the District returned the entries to protestant, but the entries were not returned to Customs until January 30, 1978, without any corrections. Counsel for protestant had been asked by the Region to submit Certificates of Manufacture and certified bills of lading on July 16, 1976, however. In any case, it is clear Customs personnel notified the protestant of the shortcomings long before the expiration of the 3-year period.

Finally, counsel refers to a discussion with the Chief Liquidator at San Francisco in the Fall of 1977, wherein the type of evidence necessary to establish use of the designated merchandise was discussed. Evidently "cutting reports", which would establish use were discussed. but counsel states it is "not practical" to maintain these reports over a period of time.

Six years from exportation to liquidation are sufficient to document properly and complete a drawback claim. The record indicates that protestant and its counsel were notified of the shortcomings long before the letter of December 29, 1977. The record does not indicate any action or inaction on the part of Customs which could be said to have delayed or hindered protestant from completing its claims.

HOLDING

The protest is denied. The entries are returned herewith.

(C.S.D. 81-174)

Classification: The Dutiable Status Of Financial Assistance Furnished To A Foreign Assembler

Date: February 12, 1981
File: CLA-2:R:CV:V
542166 MK
TAA # 17

This refers to your letter of July 22, 1980, requesting a ruling on the dutiable status of financial assistance you furnish to your Mexican assembler. We apologize for our delay in replying.

The assistance you are providing is an interest-free loan. Your specific question is whether the interest the assembler would normally have to pay the lender for this loan is a dutiable assist under 19 U.S.C. 1401a(h)(1)(a). As you correctly noted, the statutory definition of the term "assist" does not include financial assistance supplied by the buyer. We therefore conclude that neither the financial assistance you provided, nor the interest which would normally have to be paid, absent that financial assistance, is considered to be an "assist" within the statutory definition of that term under the Trade Agreements Act of 1979.

(C.S.D. 81-175)

Classification: A "CAP" Payment Received by an Exporter Cannot be Used to Reduce Production Costs of Merchandise Appraised Under Sec. 402a(f), TA of 1930, as Amended.

Date: February 12, 1981
File: CLA-2: RRUCV
542290 BS

To: Area Director of Customs, New York Seaport.

From: Director, Classification and Value Division.

Subject: Reconsideration of Internal Advice No. 173/79; Appraisement of Confectionary Items Imported from the United Kingdom

ISSUE

Whether "CAP" payments made to the exporter may be used to reduce the cost of production of certain merchandise appraised under section 402a(f), Tariff Act of 1930, as amended.

BACKGROUND

This issue has been the subject of two previous Headquarters rulings, dated September 21, 1979, and February 27, 1980. After the second ruling had been issued the Acting Area Director, New York Seaport, requested a reconsideration. The importer takes issue with the Acting Area Director's position and has submitted additional legal arguments addressing the relevant questions.

FACTS

The imported merchandise consists of certain confectionary items produced in Great Britain, the exporting country. In order to manufacture this merchandise, the exporter utilizes substantial quantities of sugar, which is imported into Great Britain, a country which belongs to the European Economic Community (EEC).

If the world price of sugar is below the EEC price, a levy is placed upon the sugar when it enters the EEC country based on the current differential. On the other hand, if the world price of sugar is above the EEC price, then the importer (of the sugar) receives the difference between the EEC price and the world price. Similarly, if the sugar is exported (as in the case of the subject confectionary items), the exporter either receives a "CAP" payment or may pay a levy, depending upon the EEC price of sugar at that time in relation to the world price.

There is no direct relationship between the levy paid upon importation (if applicable) and the CAP payment that may be received. Thus, it is theoretically possible that the exporter may pay a levy upon importation of sugar into Great Britain and pay an additional levy upon exportation to the United States.

In the instant case, the exporter paid a levy when the sugar entered Great Britain and (the record establishes) was entitled to a CAP payment when the confectionary items were scheduled for export to the United States (which obviously was prior to exportation).

LAW AND ANALYSIS

Section 402a(f) of The Act provides that the cost of production of imported merchandise shall include "* * * the cost of materials * * *

350-343 0 - 81 - 3

employed in manufacturing or producing such or similar merchandise, *at a time preceding the date of exportation of the particular merchandise under consideration which would ordinarily permit the manufacture or production of the particular merchandise* under consideration * * *." (Emphasis added.)

The importer contends that:

(1) The "real" costs of production must take into account the amount of levies paid or payments received at the time of manufacture and prior to exportation; and that the date of filing the export schedules is within the time "preceding the date of exportation which would ordinarily permit the manufacture" of the goods. This means that if a CAP payment is received at the time of scheduling, the cost of materials would be *reduced* by that amount; however, if a CAP levy is paid at the time of scheduling, then the cost of materials would have to be *increased* by that amount. (Emphasis added.)

(2) Assuming CAP payments are made on a daily basis, they reduce the cost to the exporter of sugar to be used in the next batch to be produced in the next few hours. Thus, on any given day, the CAP payments are received by the exporter prior to the next production run and therefore are reducing the actual cost of sugar for the next run.

(3) CAP levies are not unavoidable costs nor can the CAP payments be viewed as "refunds" of earlier paid CAP levies, since they are totally unrelated to one another.

In *Charles Stockheimer* and *Inter-Maritime Forwarding Co., Inc.* v. *United States*, 44 CCPA 92, CAD 642 (1957), the court held that the language of the subject statute fixes the cost of materials with respect to a definite time, that is, *the latest time which would permit delivery of the materials on the date when manufacture of the merchandise was commenced.* (Emphasis added.) The court stated that if the producer had actually made a purchase at the time specified, the price paid would fix the statutory cost of materials and that if he had not, the cost would be the price for which he might have made a purchase at such time.

It follows that since the cost of materials is determined as of a specific time, which is at or prior to the date of manufacture of the merchandise, refunds, rebates, or other such payments which may be received thereafter, may not be considered in determining statutory cost of production. Similarly, additional payments made by the manufacturer subsequent to this point in time may not be used to increase the cost of production.

Most of the decisions in this area have involved taxes or levies that were refunded upon exportation. Thus, in *Schweppes (U.S.A.), Ltd.* v. *United States*, A.R.D. 111, 43 Cust. Ct. 608 (1959), an excise tax was computed as an element in the cost of materials for cost of

production purposes, even though the full amount was refunded upon exportation. While the excise tax was found to be "* * * bound up with the other costs of the ingredients to the manufacturer and an integral part of the cost of materials, * * *", the court held that the refunds of the excise tax, contingent upon the exportation of the merchandise, did not reduce the cost of the materials. The court cited *Stockheimer*, as follows:

> * * * the quoted language refers to the *latest* time which permits such production, *since if the reference were to any time sufficiently early to permit production it would be wholly indefinite.* (Emphasis added.) The section (section 402a(f)), fixes cost of materials with respect to a definite time and without reference to who the purchaser may be or whether a purchase is actually made.

An analagous situation can be found in *Adolph Goldmark & Sons Corp.* v. *United States* (31 CCPA 6, C.A.D. 241 (1943)), which involved the determination of the component material of chief value of marmalade, manufactured from sugar and oranges. The court held in that case that a drawback of duty on sugar, received upon exportation of the marmalade, could not be considered in computing the component material of chief value.

In the above cases, the key factor was not that the drawback or refund was received upon or after exportation, but rather that such payments became effective after the merchandise had been manufactured, in accordance with the *Stockheimer* interpretation of the statute. We see no difference in the result when the principles of *Stockheimer*, *Schweppes*, etc., are applied to the facts involved in the instant case. Whether or not the CAP payments are a dollar-for-dollar refund is irrelevant. What is relevant is that these payments are legally due after the time required by the statute to fix the cost of materials, i.e., after the latest time which would permit production of the merchandise. Nor can such payments be used to reduce the cost of sugar used on the following day, since the payment is based on the quantity of merchandise manufactured on the day of scheduling and has no relevance to the cost of a different batch of sugar used to produce confectionery items scheduled for exportation on the following day. It also follows that if a CAP levy was imposed at the time of export scheduling, rather than a CAP payment received, this would similarly have no effect upon the cost of materials for statutory cost of production purposes.

While we are aware of what the manufacturer may consider to be his actual costs, this is irrelevant in determining the cost of materials

under the statute. Thus in *Schweppes, supra*, the court made the following comments:

> * * * we are constrained to observe that the Congress has, in section 402(f), *supra*, laid down a complete and inclusive formula for determining cost of production, and if a literal construction of its provision tends to bring about inequities, it is not the function of this court to relieve against them.

In recognizing certain inequities inherent in the statute, the court noted that the Customs Simplification Act of 1956 had remedied the problem (at least in that fact situation) in connection with merchandise appraised under the new constructed value basis of appraisement, by excluding from the cost of materials "* * * any internal tax applicable in the country of exportation directly to such materials or their disposition, but remitted or refunded upon the exportation of the article * * *". The court specifically pointed out that this was a change in the law and not a mere classification of the cost of production statute.

Under the circumstances, the subject levy imposed upon the sugar when entering the exporting country must be included in ascertaining the cost of materials under the statutory cost of production appraisement. On the other hand, a CAP payment received prior to the date of exportation but after "the latest time" which would permit production of the subject merchandise cannot serve to reduce the cost of materials.

(C.S.D. 81-176)

Drawback: Allowance of Drawback Under 19 U.S.C. 1313(c) When Ordered Merchandise Does Not Conform to Preimportation Standards and Specifications

Date: February 17, 1981
File: DRA-1-09-R:CD:D B 212529

Re: Further Review of Protest 4101-0-00062 of October 30, 1980—Drawback 19 U.S.C. 1313(c)

REGIONAL COMMISSIONER OF CUSTOMS,
Chicago, IL.

DEAR SIR: The referenced protest is the outgrowth of a decision by the District Director, Cleveland, refusing drawback of duties paid on 78 mobile X-ray units claimed by the importer as not meeting specifications. Claim for drawback on seven of the machines has been abandoned by the protestant.

ISSUE

May drawback under 19 U.S.C. 1313(c) be obtained based on failure of the merchandise ordered to meet an indirect specification of the importer/claimant?

FACTS

Protestant ordered 100 mobile X-ray units from a manufacturer in Japan. After importation of 78 of these battery-operated models, the units were returned to the manufacturer after first being returned to Customs at Cleveland for examination, although the return occurred more than ninety days after release from Customs custody. The units were supposedly exported from Baltimore but apparently no proof of exportation has been submitted for some of the units. Drawback entries under 19 U.S.C. 1313(c) were filed on May 31, 1979; and on July 22, 1980, protestant requested drawback in a letter to the District Director, Cleveland, informing him that protestant was "in process" of returining the units to Japan. Protestant at that time claimed the inverter circuits of the imported units failed to meet the output of an American-made mobile unit in protestant's possession. On July 28, 1980, the protestant was informed in writing by an import specialist simply that "This office is unable to comply with your request" and recommended that a protest be filed if "you want to pursue this matter." No reason was given for the denial of drawback.

Protest was timely filed on October 30, 1980, liquidation having occurred on August 1, 1980.

In reply, the District Director denied the protest because "Specific specifications regarding radiation output were not furnished timely to the manufacturer."

LAW AND ANALYSIS

1. Section 1313(c), Title 19, United States Code, provides for a refund of 99 percent of duties paid on merchandise not conforming to sample or specification, or shipped without the consent of the consignee, provided the merchandise is returned to Customs within 90 days of the date of release from Customs custody.

We note the units were not returned to Customs custody within 90 days as prescribed in the law, nor has proof of exportation been provided for each claim. Protestant alleges on the face of the protest that the "units were returned to supplier under proper drawback procedure (CR 22.31)." Yet each drawback entry was denied solely because "Claimant did not establish that the merchandise failed to conform to the sample or specifications of the order." The forms used for denying the entries specifically refer, under DRAWBACK DENIED FOR THE REASON(S) NOTED BELOW, to merchandise

not returned timely to Customs custody and failure to provide signed bills of lading within two years. These reasons were not noted as bases for denial of drawback.

The doctrine of equitable estoppel cannot be invoked by the protestant for failure to supply proof of exportation for some claims inasmuch as there is no allegation that it acted to its detriment because Customs did not use this failure as a reason for denying the claims. Timely redelivery to Customs and exportation are required by the law to obtain drawback.

In regard to the issue of untimely delivery, however, the fact that Customs accepted the goods for examination after expiration of the 90-day period constitutes an implied granting of an extension of that period. Moreover, acceptance by Customs in this instance might very well support a claim of equitable estoppel by protestant regarding this issue.

Proof of exportation is another matter. Section 1520(c)(1), Title 19, United States Code, provides:

> (c) Notwithstanding a valid protest was not filed, the appropriate customs officer may, in accordance with regulations prescribed by the Secretary, reliquidate entry to correct—(1) a clerical error, mistake of fact, or other inadvertance not amounting to an error in the construction of a law, adverse to the importer and manifest from the record or established by documentary evidence, in any entry, liquidation, or other customs transactions, when the error, mistake, or inadvertance is brought to the attention of the appropriate customs officer within one year after the date of liquidation or exaction . . .

Exportation apparently occurred no earlier than May 31, 1979 and the entries were liquidated on August 1, 1980. To complete the drawback claim, an appropriate bill of lading must be filed within two years of the date of exportation, as required by section 22.29(d) of the regulations. The protestant still has time (at least until May 30, 1981) to file the appropriate proof of export. Although liquidation has become final, if the protestant can show failure to submit proof of exportation resulted from a mistake or inadvertance as set out in 19 U.S.C. 1520(c)(1), the claims which could be denied for failure to prove exportation would be reliquidated, if notice of a claim under that section is made on or before July 31, 1981. Negligent inaction on the part of protestant in not filing the bills of lading does not constitute a "clerical error, mistake of fact, or other inadvertance." We are in no position to rule on this aspect of the case, lacking a claim under 1520(c)(1) and not having any facts as to the cause of failure to file proof of export.

2. The burden of showing failure to meet specifications, as set out in section 22.32(b) of the regulations, is on the claimant (*Border*

Brokerage Co.—A. G. Grasher v. *United States*, 53 Cust. Ct. 6, C.D. 2465). That section provides in relevant part:

> * * * If the goods are claimed to be not in accordance with sample or specifications, the drawback entry shall be accompanied by a copy of the order for the merchandise, copies of any preliminary correspondence, and the samples or specifications on which the merchandise was ordered together with a certificate of the actual owner that the sample or specifications submitted are those on which the merchandise was ordered, showing in detail in what manner the merchandise does not conform to sample or specifications. If no written order was placed and no sample or specifications are available, a certificate of the actual owner setting forth the specifications of the order and the manner in which they were communicated to the seller may be accepted * * *

According to a chronological summary of the facts prepared by the seller, in 1972 protestant asked the manufacturer/seller to develop a model unit similar to a U.S.-made model. The seller decided at that time such a unit was "too early" for the market. Upon seeing goods sales of the U.S. unit in November, 1974, the protestant informed the manufacturer/seller that the protestant intended to develop such a unit itself or the seller "should do it." At this time, the seller initiated a development plan.

Specifications were prepared by the protestant and a sample competitive U.S. unit was acquired by protestant and provided to the manufacturer/seller to promote the development.

After the models were produced by the seller and imported by protestant, a customer discovered that the inverter circuit failed to meet the output of the U.S. competitive model. The imported product's radiation per unit of time output was 30–40 percent less than the competitive model.

Further, along with its letter of July 22, 1980, to the District Director, protestant enclosed copies of specifications dated December 20, 1977. Protestant also enclosed an advertising brochure setting forth these specifications, and with the language "The (X) unit is useful in any application normally requiring the advantages of mobile radiographic unit." According to the protestant the lower output generated by the inverter circuit results in X-ray overdosages and lower quality film images.

Protestant also forwarded a letter dated September 25, 1980, from a radiological physicist with 12 years' experience, whose expert opinion is that protestant was entitled to expect only a plus or minus 10 percent deviation in the inverter output as expressed in the formula: exposure rate X current through tube X exposure time. The physicist further states that the inverter circuit output range was specified when the

protestant specified the peak voltage (kVp) and the current through tube X exposure time (mAs).

Lastly, we note that 100 units were ordered but the problems were discovered before the entire purchase order was filled. The seller agreed to the return of the 78 units sent and accepted responsibility for payment of all freight charges.

Based on the foregoing, we believe that protestant more than adequately has complied with section 22.32(b) of the regulations (see *Lansing Company, Inc.* v. *United States*, 77 Cust. Ct. 92, C.D. 4675).

Protestant's reliance on C.S.D. 80–187 is well-founded. That decision allowed drawback upon discovery by the manufacturer of a latent defect in the imported article, and notification given by the manufacturer to the importer/claimant. The same result would have ensued had the latent defect been discovered by the importer/claimant. In this case, such defect was discovered by protestant's customer who notified protestant.

HOLDING

The protest is sustained on all entries for which proper proof of exportation has been submitted. We are reserving our ruling on the remaining entries pending protestant's timely submission of proof exportation and resolution of any timely claim which may be made pursuant to 19 U.S.C. 1520(C)(1). All entries are returned herewith.

(C.S.D. 81–177)

Vessels: The Application Of The Coastwise Laws To The Shipment Of Food Commodities By An Agency Of The U.S. Government

Date: February 18, 1981
File: VES–3–07 CO:R:CD:C
VES–3–08
104942 MKT

This ruling concerns the application of the coastwise laws to the shipment of food commodities by an agency of the United States Government from the U.S. West Coast to the Northern Mariana Islands.

ISSUE

Whether section 502(b) of the Covenant to Establish a Commonwealth of the Northern Mariana Islands in Political Union With the United States of America ("Covenant") (title 48, United States Code, section 1681 note) requires that an agency of the United States Government employ coastwise-qualified vessels to transport food commodities from the U.S. West Coast to the Northern Mariana Islands.

FACTS

The Agricultural Stabilization and Conservation Service (ASCS) of the Department of Agriculture procures food commodities for another agency of the Department, the Food and Nutrition Service (FNS), for shipment to the Northern Mariana Islands as part of an FNS program. Presently, the ASCS employs a foreign-flag vessel to transport the food commodities from distribution centers on the U.S. West Coast, including one in San Francisco, to the Northern Marianas. ASCS switched to foreign-flag vessels after it found the service on United States-flag vessels to be unacceptable.

LAW AND ANALYSIS

Section 503(b) of the Covenant excepts the Northern Mariana Islands from the general application of the coastwise laws by providing that:

> The following laws of the United States, * * * will not apply to the Northern Mariana Islands except in the manner and to the extent made applicable to them by the Congress by law after termination of the Trusteeship Agreement:
> (b) Except as otherwise provided in Subsection (b) of Section 502, the coastwise laws of the United States * * *.

Section 502(b) of the Covenant makes the laws regarding coastal shipments applicable to the Northern Mariana Islands to a limited extent. Section 502(b) reads, in pertinent part, that:

> The laws of the United States regarding coastal shipments * * * will apply to the activities of the United States Government and its contractors in the Northern Mariana Islands.

Among the coastwise laws, the law regarding coastal shipments that concerns the transportation of merchandise, which is at issue here, is title 46, United States Code, section 883 (46 U.S.C. 883), also known as the "Jones Act". Section 883 prohibits a non-coastwise-qualified vessel from transporting merchandise between points embraced within the coastwise laws, directly or via a foreign port, for any part of the transportation.

To reach our decision on the application of section 883 to the Northern Mariana Islands, we have reviewed the legislative history of the Covenant. The Senate Committee on Interior and Insular Affairs Report on H.J. Res. 549 (S. Rep. No. 94–433, 94th Cong., 1st Sess. (1975)), which was enacted as the Covenant, states that:

> This provision [section 502(b)] is important because those laws [concerning coastal shipments and the conditions of employment] will be generally inapplicable to the Northern Mariana Islands until the Congress undertakes to fully apply these laws

to the Northern Mariana Islands as provided in section 503 (b) and (c). (S. Rep. No. 94–433, 94th Cong., 1st Sess. 77 (1975)).

The specific reasons for applying the laws regarding coastal shipments to the Government or its contractors when the coastwise laws do not apply to the Northern Mariana Islands generally are not discussed in the legislative history of the Covenant. However, the reason for making the coastwise laws generally inapplicable to the Northern Mariana Islands is stated in the *Hearings to Approve the Covenant to Establish a Commonwealth of the Northern Marianas on H.J. Res. 549 Before the House Committee on Interior and Insular Affairs*, 94th Cong., 1st Sess. 642 (July 14, 1975).

The hearings on H.J. Res. 549 reprinted the section-by-section analysis of the Covenant made by the Marianas Political Commission, dated February 15, 1975. The analysis was prepared to explain the features of the Covenant to the local people so that they could make an informed decision to vote to accept or reject its terms. That analysis says with regard to the general application of the coastwise laws that:

> The coastwise laws are generally applicable throughout the United States and apply to Guam. Because shipping rates on American vessels are higher than on foreign vessels, the application of the coastwise laws, also known as the "Jones Act", can have a detrimental effect on local industry and can significantly increase the cost of consumer products. It is therefore desirable to keep these laws from applying at least until after termination of the Trusteeship. (*Hearings to Approve the Covenant to Establish a Commonwealth of the Northern Marianas on H.J. Res. 549 Before the House Committee on Interior and Insular Affairs*, 94th Cong., 1st Sess. 642 (July 14, 1975); also published in *Northern Mariana Islands: Hearing on S.J. Res. 107 Before the Senate Committee on Interior and Insular Affairs*, 94th Cong., 1st Sess. 414–415 (July 24, 1975)).

The House Committee on Interior and Insular Affairs hearing on H.J. Res. 549 also contained an analysis of the Covenant that states:

> The immediate introduction of those laws [The coastwise laws of the United States and the prohibitions against foreign-flag vessels landing fish or unfinished fish products in the United States] into the Northern Mariana Islands may cause serious economic dislocation. For that reason their introduction should await special scrutiny to be made after the establishment of the Commonwealth. (*Hearings to Approve the Covenant to Establish A Commonwealth of the Northern Marianas on H.J. Res. 549 Before the House Committee on Interior and Insular Affairs* 94th Cong., 1st Sess. 389 (July 14, 1975)).

From these references that discuss the Jones Act only as it operates in its general application and from the lack of any indication that the

exception in section 502(b) is to be applied in an unusual manner, we conclude that the geographic limitation of section 502(b) is not intended to limit the application of the Jones Act to the transportation of merchandise by the Government or its contractors merely from one island in the Northern Marianas to another such island. We conclude instead that section 502(b) is intended to make the Jones Act apply to the Northern Mariana Islands in its usual sense when merchandise is transported by the Government or its contractors to any place in the Northern Mariana Islands from another coastwise point, or between places in those islands, only when the merchandise is transported to carry out an activity of the Government or its contractors in those islands.

We consider the distribution of the food commodities by the FNS in the Northern Mariana Islands to be an "activity" in the Northern Mariana Islands within the meaning of the Covenant. Therefore, a coastwise-qualified United States-flag vessel must be employed to transport the food commodities from any other coastwise point to the Northern Mariana Islands by the Government or its contractors.

Because the use of foreign-flag vessels is prohibited, any merchandise transported by your agency from the U.S. West Coast to the Northern Mariana Islands may be subject to the assessment of a monetary penalty equal to the value of the merchandise in accordance with 46 U.S.C. 883. Ordinarily, the merchandise would be subject alternatively to the penalty of forfeiture under section 883. However, the Attorney General has ruled that Government merchandise is not subject to forfeiture (26 O.A.G. 415, 417; 426–430 (1907)).

Customs currently is considering whether a monetary penalty may be assessed pursuant to 46 U.S.C. 883 against the Government or its contractors, and if so, whether it may be assessed retroactively or prospectively only. We will inform you of our decision when it is made.

HOLDING

Section 502(b) of the Covenant to Establish a Commonwealth of the Northern Mariana Islands (48 U.S.C. 1681 note) requires that an agency of the United States Government employ coastwise-qualified vessels to transport food commodities from the West Coast to the Northern Mariana Islands in accordance with 46 U.S.C. 883. Customs currently is considering and will inform you of our decision on whether a monetary penalty may be assessed, pursuant to 46 U.S.C. 883, against the Government or its contractors, and if so, whether it may be assessed retroactively or prospectively only.

EFFECT ON OTHER DECISIONS

None.

(C.S.D. 81-178)

Vessels: Application of 19 U.S.C. 1466 to foreign-flag vessels carrying U.S.-flag LASH barges subjected to repairs on the high seas by regular crew members

Date: February 19, 1981
File: VES-13-18-CO:R:CD:C
104972 JL

This ruling concerns the application of 19 U.S.C. 1466 to LASH barges.

ISSUES

(1) Must repairs made to a U.S.-flag LASH barge on the high seas by members of the regular crew of its foreign-flag carrying vessel be reported to Customs pursuant to 19 U.S.C. 1466(a)?

(2) Are members of the regular crew of a foreign-flag vessel carrying U.S.-flag LASH barges also members of the regular crew of such barges for the purposes of 19 U.S.C. 1466 (a) and (d)(2)?

FACTS

Repairs to U.S.-documented LASH (Lighter Aboard Ship) barges are being performed by the regular crews of foreign-flag carrying vessels while on the high seas. The owner of the barges claims the repairs are not dutiable by virtue of the fact that they are performed on the high seas rather than in a foreign country. The district director suggests that remission may be authorized under 19 U.S.C. 1466(d)(2).

LAW AND ANALYSIS

Title 19, United States Code, section 1466(a) (19 U.S.C. 1466(a)), provides for a 50 per centum ad valorem duty on the cost of foreign repairs and equipment purchases for certain U.S.-flag vessels except that compensation paid for such work to the regular crew of the vessel shall not be included in the cost thereof. Section 1466(d)(2) provides that the duty may be refunded or remitted if the parts used or equipment installed were of U.S. production or manufacture and the labor was performed by U.S. residents or members of the regular crew of the vessel.

LASH barges are unmanned non-self-propelled cargo barges that are transported on larger vessels in foreign trade. Upon reaching the foreign port, the carrying vessel discharges the barges, which are then towed to a secondary destination where they are unloaded. The Customs Service has consistently held that such barges are vessels that are subject to the imposition of repair duties under 19 U.S.C. 1466. (Headquarters Letter August 31, 1973, case 100348.) We have

also held that these barges, although unmanned and utilized in many respects as cargo containers while being transported on board larger vessels, are nevertheless vessels separate and apart from their carrying vessels. This is so notwithstanding the fact that the master of a carrying vessel, if the owner of the barges elects, may present vessel repair declarations and entries for the barges. (Headquarters Ruling October 3, 1978, case 103573.)

These barges, as pointed out above, have no crew. It would be patently inconsistent to hold that the barges here under consideration have identities separate and apart from the transporting vessel, which identities as U.S.-flag vessels subject them to the duties imposed by 19 U.S.C. 1466(a), and simultaneously hold that crewmembers of the carrying vessel are also crewmembers of the barge under the statute.

As to whether repairs performed to U.S.-flag vessels on the high seas are performed "in a foreign country" within the meaning of 19 U.S.C. 1466(a), the Customs Service held in 1956 that they were not performed in a foreign country within the meaning of the vessel repair statute. (Bureau Letter October 15, 1956, to Collector N.Y., file 212.6.) However, in a later ruling abstracted as T.D. 69–252(1), it was held that the costs of repairs made by workmen signed on as auxiliary crewmembers for the purpose of performing repairs on the high seas between ports of call were dutiable under the statute because the workmen were not regular members of the crew. This approach was followed in subsequent cases (ORR Rulings 243–70 and 350–70), but the issue of the location of the repairs was not addressed.

It appears that the October 15, 1956, ruling was implicitly overruled in the later cases. If not, then there would be no question of the dutiability of the repairs under consideration in cases subsequent to the earlier ruling. The question presented was recently tried by the United States Court of International Trade in the case of *Mount Washington Tanker Company* v. *United States*, 1 C.I.T. ——, Slip Opinion 80–8, December 5, 1980. The Court held that repairs performed on the high seas were accomplished in a "foreign country" for purposes of 19 U.S.C. 1466(a).

HOLDINGS

(1) Repairs made to U.S.-flag unmanned barges on the high seas by the crew of a foreign-flag carrying vessel are performed in a "foreign country" for purposes of 19 U.S.C. 1466 and are subject to declaration, entry, and payment of duty.

(2) A LASH-type barge, being unmanned, cannot have a "regular crew" as that expression is used in 19 U.S.C. 1466 (a) and (d)(2).

Therefore, the crew of a barge-carrying vessel cannot be "the crew" of a LASH or other type of unmanned vessel.

(C.S.D. 81-179)

Drawback: Machining a Casting During a Repair or Assembling Parts Into an Article Renders the Imported Article Ineligible for Same Condition Drawback

Date: February 23, 1981
File: CO:R:CD:D
212643 WR

ISSUE

Whether machining an article or assembling parts into an article is an incidental operation so as not to be considered a use for the purpose of same condition drawback.

FACTS

1. A casting is imported into the United States for repair. The repair consists of machining the casting so that it can be re-used abroad.

2. A check valve is imported into the United States and then is assembled into a product for export.

A detailed description of either process was not provided.

LAW AND ANALYSIS

Section 313(J), Tariff Act of 1930, as amended (19 U.S.C. 1313(J)), provides for a refund of duty if a duty-paid article is exported in the same condition as when imported and was not used in the United States. The performance of incidental operations on the article such as testing, cleaning, repacking and inspecting it is not considered to be a use. The allowable limit for an operation is that it may not amount to a manufacture or production for drawback purposes.

Both the House and Senate Reports on P.L. 96-609, which added the provision to the drawback law make it clear that it was intended to supplement, rather than replace, the provisions for temporary importations under bond. H. Rept. 95-1109, 96th Cong., 17 (1980) and S. Rept. 96-999, 96th Cong., 23 (1980). A major purpose was to make imports eligible for drawback in those instances where the imported merchandise was not used and the importers were unable to anticipate the later need to export that merchandise.

It also seems clear that by the choice of the words "incidental operations" and the list of examples used in section 313(J), Congress

did not intend for the imported article to be changed. The machining of a casting so as to make that casting usable again changes the casting. The assembly of a valve into another article generally is considered to be a manufacture for drawback purposes.

HOLDING

Machining a casting during a repair of that casting or assembling parts into an article involves a use of the imported article which makes them ineligible for same condition drawback under 19 U.S.C. 1313(J).

(C.S.D. 81-180)

Classification: Molded Plastic Footwear Bottoms Manufactured in Taiwan are Classifiable as Unfinished Footwear in Item 700.60, TSUS

Date: February 24, 1981
File: CLA-2:CO:R:CV:G
066155 DFC

This ruling concerns the tariff classification of molded plastic footwear bottoms manufactured in Taiwan

FACTS

The sample, known as an "icicle" is a flat, clear or translucent piece of injection molded plastic in the shape of the bottom of the foot. It has a tread on its bottom surface and a vertical projection on the top surface in the arch area. This item is designed to be held to the wearer's foot by passing a lace through a vertical loop in the plastic which extends above the top surface between the wearer's big and second toes and then through two diagonal holes in the plastic behind the arch. This item does not have a lace in its condition as imported.

ISSUE

Whether "icicles" represented by the sample are considered unfinished footwear classifiable under item 700.60, Tariff Schedules of the United States (TSUS), or are classifiable under the provision for articles not specially provided for, of rubber or plastics: other: parts of footwear in item 774.50, Tariff Schedules of the United States (TSUS).

LAW AND ANALYSIS

General Headnote 10(h), TSUS, provides that "unless the context requires otherwise, a tariff provision for an article covers such article, whether assembled or not assembled and whether finished or not finished."

It is our view that General Headnote 10(h), TSUS, is in its essence prospective. A proper application of this headnote requires us to consider what an item will become in terms of its ultimate use or construction. In this respect your attention is invited to ORR Ruling 888 dated September 21, 1970, wherein this office stated with regard to the tariff classification of incomplete footwear of textile fibers that "Assuming, without granting that they are unfinished footwear, they are not susceptible of proper classification in their condition as imported and the Bureau is of the opinion that the unfinished principle of General Headnote 10(h) is not applicable to a product which, when the headnote is applied, is not susceptible of proper classification."

A survey has been conducted at various ports within the customs territory of the United States in order to determine the type of lace that is being sold with the molded plastic footwear bottoms. This survey indicated that almost 99 percent of the instant plastic bottoms have been sold with textile laces.

Inasmuch as the survey indicates that an overwhelming number of "icicles" are used with textile laces we are constrained to hold that the icicles are unfinished footwear.

Since our ruling in ORR 888, dated September 21, 1970, was issued regarding the classification of incomplete footwear, the court has redefined the substantially complete test in the case of *Daisy Heddon, Div. Victor Comptometer Corp.* v. *United States*, 66 CCPA 97, C.A.D. 1228, 600 F. 2d 799 (1979). In this case, the court held that incomplete fishing reels were classifiable as finished fishing reels although missing a number of components. The court in reaching its decision stated at page 801, that, "There are several factors which may come into play in the determination of whether an article is substantially complete. In a case, such as this, where the article is incomplete due to the omission of one or more parts, as opposed to where an article is incomplete because the material which comprises the article is in need of further processing, the following factors can be revelant: (1) Comparison of the number of omitted parts with the number of included parts; (2) comparison of the time and effort required to complete the article with the time and effort required to place it in its imported condition; (3) comparison of the cost of the included parts with that of the omitted parts; (4) the significance of the omitted parts to the overall functioning of the completed article; and, (5) trade customs, i.e., does the trade recognize the importation as an unfinished article or merely a part of that article."

In applying the first factor there is one omitted part and one included part. In this instance the first factor is inconclusive in determining whether the "icicle" is a part or is unfinished footwear.

With respect to the second factor, the omitted lace needs only to be threaded through the loop and rear holes. The time involved in threading the lace is but a few seconds and consequently this factor favors classification of the "icicle" as unfinished footwear.

With respect to the third factor, the cost of the omitted lace is considerably less than the cost of the plastic bottom. Thus, the application of this factor favors classification as unfinished footwear.

In applying the fourth factor there is no doubt that the absence of a lace is important. However, it is not extremely significant in this instance because of the unique character of the "icicle." With ordinary footwear the upper performs the function of protecting the instep, heel and sides of the foot. The lace used with an "icicle" performs no such function; it merely holds the "icicle" to the bottom of the foot. We would agree that application of this factor barely favors classification of the "icicle" as a part.

With respect to the fifth factor we have conflicting information as to whether the trade considers the "icicle" to be unfinished footwear. Consequently, application of this factor to the merchandise is inconclusive in determining whether the "icicle" is a part or is unfinished footwear.

A summary of the factors listed above shows two of the factors in favor of classification as unfinished footwear, one in favor of classification as parts, and two factors inconclusive in determining classification. We believe that on the whole, application of the factors to this unique type of footwear compels the conclusion that the "icicles" are unfinished footwear for tariff purposes.

"Icicles" without laces and "icicles" with textile laces do not have uppers with over 90 percent of the exterior surface area of rubber or plastics and consequently are precluded from classification under item 700.58, TSUS. Inasmuch as they are precluded from classification under item 700.58, TSUS, they fall within the basket provision of item 700.60, TSUS.

It has been asserted that "the imported article in its imported condition is totally incapable of use and unsaleable because one feature required to create a substantially complete article of footwear, to wit, the ability of such article to be worn on the foot, is not present at the time of importation and therefore the subject article cannot be considered an article of footwear."

We do not believe that the missing upper in this instance which renders the "icicle" unuseable as finished footwear disqualifies the incomplete "icicle" from classification as unfinished footwear. In the case of *The Kinney Co.* v. *United States*, 83 Cust. Ct. 137, C.D. 4831 (1979), the Customs Court responded to the importer's contention that unfinished flat metal pieces with enamel decoration have no use

350-343 0 - 81 - 5

in their imported condition and thus could not be classified as parts of jewelry under item 740.38 TSUS, as follows:

> The implications of plaintiff's argument that these objects have no use at all in their imported condition would disrupt a basic statutory arrangement. If that reasoning were followed, no unfinished article could be classified in the provision for the finished article since it could always be argued that articles have no use in their unfinished state. Yet it is clear from general interpretative rule 10(h) that the tariff schedules contemplate that articles whose finished form can be definitely discerned are described by the provision for the finished article even if they are unfinished.

In conclusion we believe that using the rationale of ORR Ruling 888 or the guidelines set forth in the *Daisy Heddon* case, *supra*, the result reached is that the "icicles" in issue are unfinished footwear for tariff purposes.

HOLDING

The "icicles" are dutiable at the rate of 20 percent ad valorem under item 700.60, TSUS.

Pursuant to Schedule 7, Part 1, Subpart A, Headnote 3(b), TSUS, this unfinished footwear is subject to appraisement on the American selling price of the domestically produced Firence "Sun Skimmer" in the same state of completion.

ERRATUM

In Customs Bulletin, Vol. 15, No. 26, dated July 1, 1981, T.D. 81-168 should read as follows:

19 CFR Parts 103, 152, 175

(T.D. 81-168)

Customs Regulations Relating to Availability of Information

AGENCY: U.S. Customs Service, Department of the Treasury.

ACTION: Final rule.

SUMMARY: This document revises the Customs Regulations relating to the public disclosure of information. There have been substantial changes to the relevant law since publication of the prior regulations. The revision brings the regulations into conformity with the current law.

This action has been taken after publication of a notice of proposed rulemaking and careful analysis of public comment received.

These amendments do not constitute a major regulation within the meaning of Executive Order 12291, relating to Federal Regulation.

EFFECTIVE DATE: (30 days after publication in the Federal Register.)

FOR FURTHER INFORMATION CONTACT: Steven I. Pinter, Freedom of Information and Privacy Branch, U.S. Customs Service, 1301 Constitution Avenue NW., Washington D.C. 20229 (202-566-8681).

SUPPLEMENTARY INFORMATION:

BACKGROUND

A proposed revision of Part 103, Customs Regulations (19 CFR Part 103), relating to the public disclosure of information was published in the Federal Register on August 20, 1979 (44 FR 48709). This revision was deemed necessary due to the amendments to the Freedom of Information Act by Public Law 93-502, 80 Stat. 1561, and the conforming amendments to the Department of the Treasury regulations concerning public access to records (31 CFR Part 1)

published in the Federal Register on February 20, 1975 (40 FR 7439).

Part 103 sets forth procedures whereby the public may obtain access to records created and maintained by the United States Customs Service. The procedures involve the publication of certain information in the Federal Register, the public inspection or copying of information, and the submission of specific requests for records to Headquarters, United States Customs Service, or to offices of the regional commissioners of Customs. Also included are procedures for appeal of an initial administrative determination to deny such a request and a uniform schedule of fees for the search and duplication of Customs records. Officers of the Customs Service who are responsible for making the initial and appellate determinations as to whether a request for records shall be granted are designated.

Exemptions from disclosure, conforming to the Freedom of Information Act amended by Public Law 93-502 are set forth.

DISCUSSION OF MAJOR COMMENTS

Comments received in response to publication of the proposed revision of Part 103 in the Federal Register (44 FR 48709) have been carefully analyzed and are summarized below.

The majority of comments were concerned primarily with the protection of confidential business information. These comments were critical of section 103.14 which permits limited access to information on vessel manifests to both accredited members of the press, and to the public and allows the publication of certain of this information. Generally, privileged or confidential information contained in vessel manifests is exempt from disclosure under section 103.12. In this regard, commenters believed that competitors could glean from vessel manifests and summary statistical reports shipping methods, ports of entry, sources of supply, volume cost and selling price of goods, and determine market expectations and plans for new markets. Concerns were expressed that this private data, developed at a cost to a firm, would become publicly available. According to these commenters, competitors would thereby gain a substantial market advantage. The commenters conceive that if one information service published identifying data for a shipment plus its quantity, and a second service published the data for the same shipment plus its price, a subscriber to both services would obtain the combination of information which Customs would not release to either the press or public.

Criticism is also raised that section 103.14 permits selective disclosure inasmuch as accredited members of the press are allowed to examine vessel manifests which the general public may not.

It is the position of the Customs Service that the proposed regulation adequately balances the interests of the parties involved by generally exempting from disclosure privileged or confidential information contained in vessel manifests, while still insuring relative ease of publication of legally available information. As an added precaution, section 103.14(d) permits, upon written application, a shipper, consignee, or importer to request, that its name be withheld from public disclosure. In addition, under section 103.14(b), a press representative must submit to Customs for review any copy or notation made from a vessel manifest. Therefore, although the press may examine information not available to the public, the ability to copy such information or take notes of such information is severely limited by section 103.14.

It is pertinent to note that, on the other hand, certain comments received oppose the suspension of disclosure provision as currently written inasmuch as it does not require some factual determination of specific harm to be made.

Parenthetically, it also must be noted that that portion of Treasury Decision 81-19, published in the Federal Register on January 29, 1981 (46 FR 9567), relating to vessel manifest disclosure requirements, has been incorporated into this document as section 103.14.

One commenter recommended that section 103.15, which provides for sanctions against Customs officers and employees for improper disclosure to exporters and importers, be broadened to encompass all unauthorized disclosures. In response to this comment, the language of section 103.15 has been changed to invoke sanctions for unauthorized disclosures to any person not authorized by law or regulation to receive the disclosed information.

In reference to judicial review of an administrative action on an information request, one commenter noted that the authority formerly possessed by the Civil Service Commission to investigate certain withholdings has been transferred to the Special Counsel, Merit Systems Protection Board. (Section 906(a)(10) of the Civil Service Reform Act of 1978). In response, appropriate changes in section 103.9 have been made.

PROCEDURAL CHANGES

In accordance with a change in the internal procedures in Customs Headquarters, the proposed section on the maintenance of files and records, which invested the Director, Entry Procedures and Penalties Division, at Headquarters with the responsibility for maintaining files on information requests, has been deleted. Henceforth, information requests should be made at the Freedom of Information and Privacy Branch, Headquarters (section 103.5(d)), and

the appropriate division director at Headquarters shall make the initial determination to grant or deny a request for a record maintained in that particular division (section 103.6(a)(2)). Appeal of an initial determination shall no longer be made to the Assistant Commissioner of Customs, but rather to the Director, Office of Regulations and Rulings (section 103.7).

Pursuant to Executive Order 12188 (45 FR 69273), which transferred responsibility for the administration of antidumping and countervailing duty laws to the Secretary of Commerce, references to records on antidumping and countervailing duty in section 103.11 have been deleted.

INAPPLICABILITY OF REGULATORY FLEXIBILITY ACT

This document is not subject to the provisions of the Regulatory Flexibility Act (5 U.S.C. 601-612) because the notice of proposed rulemaking on which the final rule is based was issued prior to January 1, 1981, the effective date of the Act.

DRAFTING INFORMATION

The principal authors of this document were Harold I. Loring and Todd J. Schneider, Office of Regulations and Rulings, U.S. Customs Service. However, personnel from other Customs offices participated in its development.

AMENDMENTS TO THE REGULATIONS

Parts 103, 152, and 175, Customs Regulations (19 CFR Parts 103, 152, 175), are amended as set forth below.

WILLIAM T. ARCHEY,
Acting Commissioner of Customs.

Approved: May 7, 1981.

JOHN P. SIMPSON,
Acting Assistant Secretary of the Treasury.

Part 103, Customs Regulations (19 CFR Part 103), is revised to read as follows:

PART 103—AVAILABILITY OF INFORMATION

SEC.

103.0 Scope.
103.1 Public reading rooms.
103.2 Information available to the public.
103.3 Publication of information in the Federal Register.

SEC.

103.4 Public inspection and copying.
103.5 Specific requests for records.
103.6 Grant or denial of initial request.
103.7 Administrative appeal of initial determination.
103.8 Time extensions.
103.9 Judicial review.
103.10 Fees for services.
103.11 Specific Customs Service records subject to disclosure.
103.12 Exemptions.
103.13 Segregability of records.
103.14 Information on vessel manifests and summary statistical reports.
103.15 Sanctions for improper actions by Customs officers or employees.
103.16 Information concerning fines, penalties, and forfeitures cases.
103.17 Testimony or the production of documents in court.

Authority.—R.S. 251, as amended, sec. 624, 46 Stat. 759, sec. 501, 65 Stat. 290; 5 U.S.C. 301, 552, 19 U.S.C. 66, 1624, 31 U.S.C. 483a. Additional authority and statutes interpreted or applied are cited in the text or in parentheses following the sections affected.

§ 103.0 SCOPE.

This part contains regulations implementing the public information provisions of the Freedom of Information Act, as amended (5 U.S.C. 552). For the purpose of this part the Office of the Chief Counsel is considered to be a part of the United States Customs Service. The regulations supplement the regulations of the Department of the Treasury concerning public access to records, which are found in 31 CFR Part 1 and which are applicable to all constituent units of the Department, including the United States Customs Service. In the event of any inconsistency between these regulations and those of the Department of the Treasury, the Department of the Treasury regulations shall govern. Included in this part are the procedures by which the public may obtain access to records maintained by the United States Customs Service. The regulations provide a uniform schedule of fees for the search and duplication of Customs opinions and rulings, orders made in the adjudication of cases, and other Customs records and documents. In addition, the part includes provisions governing the release of certain information to the press and the giving of testimony or the production of Customs documents in court proceedings. Persons seeking information or records may find it useful to consult with either the Chief, Freedom of Information and

Privacy Branch, United States Customs Service, Washington, D.C. 20229, the Public Information Division at Headquarters, the appropriate regional commissioner of Customs, or the public information officer in the appropriate Customs regional office, before invoking the formal procedures set forth in this part.

§ 103.1 PUBLIC READING ROOMS.

Each office listed below will maintain a public reading room or public reading area where the material required to be made available under 5 U.S.C. 552(a)(2) and this part may be inspected and copied:

United States Customs Service [Headquarters], 1301 Constitution Avenue, N.W., Washington, D.C. 20229.
Region I—Boston, 100 Summer Street, Suite 1819, Boston, Massachusetts 02110.
Region II—New York, 6 World Trade Center, New York, New York, 10048.
Region III—Baltimore, U.S. Customhouse, 40 S. Gay Street, Baltimore, Maryland 21202.
Region IV—Miami, 99 S.E. 5th Street, Maimi, Florida 33131.
Region V—New Orleans, Canal-LaSalle Building, Suite 2400, 1440 Canal Street, New Orleans, Louisiana 70112.
Region VI—Houston, 500 Dallas Street, Suite 1240, Houston, Texas 77002.
Region VII—Los Angeles, New Federal Building, 300 N. Los Angeles Street, Los Angeles, California 90012.
Region VIII—San Francisco, 211 Main Street, Suite 1000, San Francisco, California 94105.
Region IX—Chicago, Room 1501, 55 East Monroe Street, Chicago, Illinois 60603.

The reading rooms are open to the public during regular business hours unless other hours are posted, Monday through Friday of each week, exclusive of national holidays. A fee for copies of requested material is charged in accordance with § 103.10.

§ 103.2 INFORMATION AVAILABLE TO THE PUBLIC.

(a) *General.* The Freedom of Information Act, as amended (5 U.S.C. 552), provides for access to information and records developed or maintained by Federal agencies. Subject only to the exemptions set forth in § 103.12, the public generally or any individual member is entitled to information or records which are described in paragraph (b) of this section and which are in the possession of the United States Customs Service. Access to that information is governed by the regulations in this part.

(b) *Three categories of information available.* Generally, 5 U.S.C. 552 divides agency information into three major categories and provides methods by which each category is available to the public. The three major categories, for which the disclosure requirements

of the United States Customs Service are set forth in this part, are as follows:

(1) Information required to be published in the Federal Register (see § 103.3).

(2) Information required to be made available for public inspection and copying or, in the alternative, to be published and offered for sale (see §103.4).

(3) Information required to be made available to any member of the public upon specific request (see § 103.5).

§ 103.3 PUBLICATION OF INFORMATION IN THE FEDERAL REGISTER.

(a) *Requirement.* Subject to the application of the exemptions described in §103.12 and subject to the limitations provided in paragraph (b) of this section, the United States Customs Service is required, by 5 U.S.C. 552(a)(1), to separately state, publish and keep current in the Federal Register for the guidance of the public the following information:

(1) Descriptions of its central and field organization and the established places at which, the persons from whom, and the methods whereby, the public may obtain information, make submittals or requests, or obtain decisions.

(2) A statement of the general course and method by which its function are channeled and determined, including the nature and requirements of all formal and informal procedures available.

(3) Rules of procedure, descriptions of forms available and the places at which forms may be obtained, and instructions as to the scope and contents of all papers, reports, or examinations.

(4) Substantive rules of general applicability adopted as authorized by law, and statements of general policy or interpretations of general applicability formulated and adopted by it.

(5) Each amendment, revision, or repeal of matters referred to in subparagraphs (1) through (4) of this paragraph.

(b) *Limitations.*—(1) *Incorporation by reference in the Federal Register.* Matter reasonably available to an affected class of persons, whether published by a private organization or an agency of the United States, is published in the Federal Register for purposes of paragraph (a) of this section when it is incorporated by reference in the Federal Register with the approval of the Director of the Federal Register. Any matter which is incorporated by reference must be set forth in the privately- or publicly-printed document substantially in its entirety and not merely summarized or printed as a synopsis. There can be no incorporation by reference in the Federal Reigster of any matter where only a few persons having a special working knowledge of the activities of the United States Customs Service are familiar with its location and scope.

The provision of 5 U.S.C. 552(a)(1) and 1 CFR Part 20 control any incorporation of matter by reference.

(2) *Effect of failure to publish.* Except to the extent that a person has actual and timely notice of the terms of any matter referred to in paragraph (a) of this section which is required to be published in the Federal Register, that person is not required in any manner to resort to, or be adversely affected by, that matter if it is not published or incorporated by reference. That is, any matter which imposes an obligation and which is not published or incorporated by reference can not adversely change or affect a person's rights.

§ 103.4 PUBLIC INSPECTION AND COPYING.

(a) *In general.* Subject to the application of the exemption described in § 103.12 the United States Customs Service is required, by 5 U.S.C. 552(a)(2) and sections 174.32 and 177.10 of this chapter, to make available for public inspection and copying or, in the alternative, promptly publish and offer for sale, the following information:

(1) Final opinions and orders, including concurring or dissenting opinions, made in the adjudication of cases;

(2) Within 120 days of issuance, any precedential decision (including any ruling letter, internal advice memorandum, or protest review decision) issued under the Tariff Act of 1930, as amended, with respect to any Customs transaction;

(3) Those statements of policy and interpretations which have been adopted by the United States Customs Service but are not published in the Federal Register; and

(4) Administrative staff manuals and instructions to staff that affect a member of the public.

(b) *Indexes.* The United States Customs Service is required by 5 U.S.C. 552(a)(2) to maintain and make available for public inspection and copying those current indexes which identify any item described in paragraphs (a) (1) through (3) of this section that is issued, adopted, or promulgated after July 4, 1967, and that is required to be made available for public inspection or published. Unless the Commissioner determines by an order published in the Federal Register that publication is unnecessary and impracticable, these indexes are published on a quarterly or more frequent basis and are available for purchase at each of the public reading rooms listed in § 103.1, at a cost not to exceed the direct cost of duplication.

(c) *Effect of failure to publish or make available.* No matter, described in paragraphs (a) (1) through (3) of this section which is required by this section to be made available for public inspection or published, may be relied upon, used, or cited as precedent by the United States Customs Service against a party, other than an agency, unless that

party has actual and timely notice of such matter or unless the matter has been indexed and either made available for inspection or published, as provided by this section. This paragraph applies only to matters which have precedential significance and does not apply to matters which have been made available pursuant to § 103.3.

(d) *Deletion of identifying details.* To prevent an unwarranted invasion of personal privacy, in accordance with 5 U.S.C. 552(a)(2), identifying details contained in any matter described in paragraphs (a) (1) through (3) of this section are deleted before making that matter available for inspection or publication. However, in every case where identifying details are deleted, the basis for the deletion is explained in writing, giving specific reasons for the deletion and citing the applicable provision of 5 U.S.C. 552 and § 103.12, in an attachment to the document from which the identifying details have been deleted.

(e) *Public reading rooms.* The United States Customs Service has available for inspection and copying, in a reading room or otherwise the matters described in paragraphs (a) (1) through (3) of this section which are required by paragraph (a) to be made available for public inspection or published in the current indexes. Facilities are provided whereby a person may inspect and obtain copies of the material. There is no fee for access to materials, but a fee is charged in accordance with § 103.10 for a copy of any material provided.

§ 103.5 SPECIFIC REQUEST FOR RECORDS.

(a) *In general.* Except with respect to the records made available under §§ 103.3 and 103.4, but subject to the application of the exemptions described in § 103.12 the United States Customs Service is required, by 5 U.S.C. 552(a)(3), upon a request for reasonably-described records that conforms in every respect to the rules and procedures of this part, to make the requested records promptly available to the requester. A request or an appeal from the initial denial of a request which does not comply with the requirements set forth in this part is not subject to the time limits of §§ 103.6, 103.7, and 103.8 until amended so as to comply. Nevertheless, every reasonable effort will be made to answer each request within the applicable time limits or, if necessary, to promptly advise the requester in what respect the request or appeal is deficient so that it may be resubmitted or amended for consideration in accordance with this part. This section applies only to existing records which are in the possession or control of the United States Customs Service. There is no requirement that records be created or data be processed in other than the existing format in order to answer a request for records.

(b) *Requests for records not in control of the United States Customs Service*—(1) *Referral of request.* Where the request is for a record in the possession of, under the control of, or created by a constituent unit of the Department of the Treasury other than the United States Customs Service, the appropriate Customs officer shall transfer the request to the appropriate constituent unit and notify the requester of that transfer. Forwarding a request to another constituent unit is not a denial of access within the meaning of these regulations. If the United States Customs Service receives a request forwarded from another constituent unit of the Department of the Treasury, the time limits for response set forth in §§ 103.6(b) and 103.8(a) commence upon receipt of the request by the Freedom of Information and Privacy Branch, U.S. Customs Service. If the United States Customs Service receives a request for a record that is not in the possession or control of any constituent unit of the Department of the Treasury, the appropriate Customs officer shall return the request to the sender with an explanation of that fact.

(2) *Request for advice.* If the Customs Service has a copy of a requested unclassified record that was created by a Department or agency other than a constituent unit of the Department of the Treasury; the appropriate Customs officer shall ask that Department or agency for its advice on the release of the record. The appropriate Customs officer shall advise the other Department or agency that, in the absence of timely guidance from it, the United States Customs Service will proceed to make its own determination in accordance with this part. If it becomes necessary to respond to a requester because of the time limits set forth in §§ 103.6(b) and 103.8(a) without the advice of the other Department or agency, the appropriate Customs officer shall make the determination in accordance with this part and advise the requester accordingly. If the appropriate Customs officer denies access to the record under one of the exemptions set forth in § 103.12, that officer shall advise the requester of the right to appeal the denial and of the possibility of sending a request for the record directly to the originating Department or agency. If a requester appeals from a denial to the United States Customs Service, the appropriate Customs officer shall ask the originating Department or agency for timely advice on whether to release the records. Nevertheless, the ultimate decision on the appeal from a denial of access to a record rests with the Director, Office of Regulations and Rulings, as set forth in § 103.7.

(3) *Classified records.* If the Customs Service has a copy of a requested record created by a Department or agency other than a constituent unit of the Department of the Treasury, and that record is classified or contains both classified and unclassified material, the

request shall be referred to the originating Department or agency for a direct response. The requester shall be notified immediately of the referral. Such referral shall not constitute a denial of the request and no appeal rights accrue to the requester.

(c) *Form of request.* Although no standard form is prescribed for a request, in order to be subject to the provisions of this section and §§ 103.6 through 103.9, a request for records must—

(1) Be made in writing and signed by the person making that request;

(2) State that it is made pursuant to the Freedom of Information Act, as amended (5 U.S.C. 552), or these regulations, and have conspicuously printed on the face of the envelope the words "Freedom of Information Act Request" or "FOIA Request";

(3) Be addressed to the appropriate office or officer of the United States Customs Service, as set forth in paragraph (d) of this section;

(4) Reasonably describe the records in accordance with paragraph (e) of this section;

(5) Set forth the address where the person making the request desires to be notified of the determination as to whether the request will be granted;

(6) State whether the requester wishes to inspect the records or desires to have a copy made and furnished without first inspecting them; and

(7) State the firm agreement of the requester to pay the fees for search and duplication ultimately determined in accordance with §103.10, or request that such fees be reduced or waived and state the justification for such request (see § 103.10(d)).

Where the initial request, rather than stating a firm agreement to pay the fee ultimately determined in accordance with § 103.10, places an upper limit on the amount the requester agrees to pay and that upper limit is likely to be lower than the estimated fee, or where the requester asks for an estimate of the fees to be charged, or if the fees are expected to exceed $50, the appropriate Customs officer shall promptly advise the requester of the estimated fee due and ask the requester to agree to pay that amount. Where the initial request includes a request for reduction or waiver of fees, the appropriate Customs officer shall determine whether to grant the request for reduction or waiver in accordance with § 103.10(d) and notify the requester of the decision. If the officer decides to charge the requester for all or part of the fees normally due, the officer shall ask the requester to agree to pay the amount so determined. The requirements of this paragraph are not met until the requester agrees, in writing, to pay the fees applicable to the request for records, if any, or has made payment in advance of the fees estimated to be due.

(d) *To whom requests for records should be addressed.*

(1) *Headquarters.* Requests made by mail for records maintained at the Headquarters of the United States Customs Service should be addressed to "Freedom of Information Act Request," U.S. Customs Service, 1301 Constitution Avenue, NW., Washington, D.C. 20229. Requests may be delivered personally to the Freedom of Information and Privacy Branch, U.S. Customs Service, 1301 Constitution Avenue, NW., Washington, D.C.

(2) *Regional offices.* A person shall request records or information maintained in a field office of the United States Customs Service by either mailing or personally delivering the request to the regional commissioner of Customs of the region in which the field office is located. The addresses of the regional commissioners are listed in § 103.1.

(e) *Reasonable description of records.* A request for records must describe the records in reasonably sufficient detail to enable a Customs officer who is familiar with the subject area of the request to locate the records without placing an unreasonable burden upon the United States Customs Service. While no specific formula for a reasonable description of a record can be established, the requirement is usually satisfied if the requester gives the name, subject matter, and, if known, the date and location of the requested record. However, a requester should furnish any additional information which will more clearly identify the requested records. If a request does not reasonably describe the records being sought, the appropriate Customs officer shall ask the requester to refine the request. If necessary a requester may be granted a conference with knowledgeable Customs personnel. The requirement for a reasonable description is not a device for improperly withholding records from the public.

(f) *Date of receipt of request.* A request for records is considered to have been received for purposes of this part on the later of the dates on which—

(1) The requirements of paragraph (c) of this section have been satisfied; and, where applicable,

(2) The requester has agreed in writing, by executing a separate contract or otherwise, to pay the fees for search and duplication determined to be due in accordance with § 103.10; or

(3) The fees have been waived in accordance with § 103.10(d); or

(4) Payment in advance has been received from the requester.

A Customs officer or employee who receives a request for records and a separate agreement to pay, or a letter transmitting prepayment, or who issues a final notification of waiver of fees, shall stamp the date of receipt or dispatch by the responsible office on the material. The latest of those dates is the date of receipt of the request. As soon as

the date of receipt has been established, the appropriate Customs officer shall acknowledge receipt and inform the requester of the title of the Customs officer who is responsible for acting on the request.

(g) *Search for record requested.* Upon the receipt of a request, the appropriate Customs officer shall attempt to identify and locate the requested records. With respect to records maintained in computerized form, a search for a record includes services functionally analogous to searches for records which are maintained in a conventional form. However, Customs personnel are not required to tabulate or compile information for the purpose of creating a record. Only records in existence at the time of the receipt of the request will be treated as falling within the scope of the request and no request for the continuing production of documents created after receipt of the request will be honored.

(h) *"Request for record" defined.* For purposes of uniformity in record-keeping a "request for a record" is defined as a written request for a record of the U.S. Customs Service which has not been published in the Federal Register, the Customs Bulletin, by press release, or otherwise, or made available in a public reading room, or which has not previously been customarily furnished to requesters, whether or not the request makes reference to the Freedom of Information Act, as amended (5 U.S.C. 552).

103.6 GRANT OR DENIAL OF INITIAL REQUEST.

(a) *Officers designated to make initial determinations.*

(1) *Regional offices* The appropriate regional commissioner of Customs shall make any initial determination on a request for a record which is maintained in that region.

(2) *Headquarters.* For records located at Customs Service Headquarters, the initial determination to grant or deny a request shall be made by the appropriate Division Director at Customs Service Headquarters having custody of or functional jurisdiction over the subject matter of the requested records. In the event the request relates to records which are maintained in an office which is not within a division, the initial determination shall be made by the individual designated for that purpose by the Assistant Commissioner or Comptroller, as appropriate, having responsibility for that office.

(b) *Time limit for initial determinations.* The time limit for making an initial determination to grant or deny a request for records, including the time for notifying the requester of that determination, is 10 days (excepting Saturdays, Sundays, and legal public holidays) after the date of receipt of the request (see § 103.5(f)), unless the designated officer invokes an extension pursuant to § 103.8(a) or the requester otherwise agrees to an extension.

(c) *Grant of request.* If the appropriate Customs officer grants a request, and if the requester wants a copy of the requested records, that officer shall mail a copy of those records to the requester together with a statement of the fees for search and duplication at the time of the determination or promptly thereafter. If a requester wants to inspect the record, the appropriate Customs officer who grants the request shall send written notice to the requester stating the time and place of inspection and the amount of any fee involved in the request. In such a case, the appropriate Customs officer shall make the record available for inspection at the time and place stated, but in a manner so as not to interfere with its use by the United States Customs Service or to exclude other persons from making an inspection. In addition, reasonable limitations may be placed on the number of records which may be inspected by a person on any given date. The requester is not allowed to remove a record from the inspection room. If, after making inspection, the requester wants a copy of all or a portion of the requested record, the appropriate Customs officer shall supply the desired copy upon payment of the established fee prescribed in § 103.10.

(d) *Denial of request.* The Customs officer who denies a request for records (whether in whole or in part) shall mail written notice of the denial to the requester. The letter of notification shall contain (1) the physical location of the requested records, (2) the applicable exemption(s) and reason for not granting the request, (3) the name and title or position of the Customs officer who denied the request, (4) advice on the right to administrative appeal in accordance with § 103.7, and (5) the title and address of the Customs officer who is to decide any appeal.

(e) *Inability to locate records within time limits.* If a requested record cannot be located and evaluated within the initial 10-day period or the extension period allowed under § 103.8(a), the Customs officer who is responsible for the initial determination shall continue to search for the records. However, that officer shall also notify the requester of the facts and inform the requester that he or she may consider the notification to be a denial of access within the meaning of paragraph (d) of this section, and provide the requester with the address for the submission of an administrative appeal. The requester may also be invited, in the alternative, to agree to a voluntary extension of time in which to locate and evaluate the records. A voluntary extension of time does not waive a requester's right to appeal any ultimate denial of access or to appeal a failure to locate the records within the voluntary extension period.

§ 103.7 ADMINISTRATIVE APPEAL OF INITIAL DETERMINATION.

(a) *To whom appeals should be submitted.* A requester may submit an administrative appeal to the Director, Office of Regulations and Rulings, within 35 days after the date of notification described in § 103.6 or the date of the letter transmitting the last records released, whichever is later. A requester shall mail or personally deliver an appeal to the United States Customs Service, 1301 Constitution Avenue, NW., Washington, D.C. 20229.

(b) *Form of appeal.* The Administrative appeal shall—

(1) Be in writing and signed by the requester;

(2) Have conspicuously printed on the face of the envelope the words "Freedom of Information Act Appeal";

(3) Reasonably describe, in accordance with § 103.5(e), the records to which the appeal relates;

(4) Set forth the address where the requester desires to be notified of the determination on appeal;

(5) Specify the date of the initial request and the date and control number of the letter denying the initial request; and

(6) Petition the Director, Office of Regulations and Rulings, to grant the request for records and state any arguments in support thereof.

(c) *Disposition of appeal.* The Customs officer or employee who receives an appeal shall stamp the date of receipt on the appeal and the stamped date is the date of receipt for purposes of the appeal. The Director, Office of Regulations and Rulings, shall acknowledge and advise the appellant of the date of receipt and of the date that a response is due under this paragraph. The Director shall affirm the initial denial (in whole or in part) or grant the request for records and notify the appellant of that determination by letter mailed within 20 days (exclusive of Saturdays, Sundays, and legal public holidays) after the date of receipt of the appeal, unless extended pursuant to § 103.8(a). The purpose of the letter of denial is to inform the appellant of the reason for the denial and the right to judicial review of that denial under 5 U.S.C. 552(a)(4)(B). If the Director is unable to act on an appeal within the 20-day period (or any extension thereof pursuant to § 103.8(a)), the Director shall send written notice of that fact to the appellant. In those circumstances, an appellant is entitled to commence an action in a district court as provided in § 103.9 despite any continuation in the processing of an appeal. However, the appellant may also be invited, in the alternative, to agree to a voluntary extension of time in which to decide the appeal. A voluntary extension does not waive the right of the appellant to ultimately commence an action in a United States district court on the appellant's request.

§ 103.8 TIME EXTENSIONS.

(a) *Ten-day extension.* In unusual circumstances, the Customs Officer who is responsible for deciding an initial request or an appeal may extend the time limitations set in §§ 103.6 and 103.7 after written notice to the requester or appellant. This notice must state the reason for the extension and the date on which the determination is expected to be dispatched. Any extension or extensions of time are limited to a cumulative total of not more than 10 additional working days. (For example, if an extension pursuant to this paragraph is invoked in connection with an initial determination, any unused days of the extension period may be invoked in connection with the determination on administrative appeal by written notice from the Director, Office of Regulations and Rulings, who is to make the appellate determination. If no extension is sought for the initial determination, and extension of 10 days may be added to the ordinary 20-day period for appellant review.) Generally, extensions will be invoked only to the extent reasonably necessary to properly respond to a request. As used in this paragraph, "unusal circumstances" means at least one of the following:

(1) The need to search for and collect the requested records from field facilities or other establishments in buildings other than the building in which the office of the Customs officer to whom the request is made is located.

(2) The need to search for, collect, and appropriately examine a voluminous amount of separate and distinct records which are demanded in a single request.

(3) The need for consultation, which shall be conducted with all practicable speed, with another Department or agency having a substanital interest in the determination of the request, among two or more constituent units within Department of the Treasury, or within the United States Customs Service (other than the legal staff or Public Affairs Division) having substantial subject-matter interest therein. Consultations with personnel of the Department of Justice concerned with requests for records under the Freedom of Information Act, as amended (5 U.S.C. 552), do not constitute a basis for an extension under this subparagraph.

(b) *Extension by judicial review.* If the United States Customs Service fails to comply with the time limitations specified in §§ 103.6 and 103.7 and the requester commences an action under § 103.9, the court in which the suit was initiated may retain jurisdiction and allow the United States Customs Service additional time to review its records, if the Customs Service shows the existence of exceptional circumstances and the exercise of due diligence in responding to the request.

§103.9 JUDICIAL REVIEW.

(a) *Failure to comply with time limitations.* If the United States Customs Service fails to comply with the time limitations specified in §§103.6, 103.7 or 103.8, a requester is considered to have exhausted the administrative remedies with respect to the request.

(b) *Procedure of initiating judicial review.* If a request for records is denied upon appeal pursuant to §103.7, or if no determination is made within the 10-day or 20-day periods specified in §§103.6 and 103.7, respectively, together with an extension pursuant to §103.8(a) or by agreement of the requester, the requester may commence an action under 5 U.S.C. 552(a)(4)(B) in a United States district court in the district (1) in which the requester resides, (2) in which the requester's principal place of business is located, (3) in which the records are situated, or (4) in the District of Columbia. Service of process in that action is governed by the Federal Rules of Civil Procedure (28 U.S.C. App.) applicable to actions against an agency of the United States. The Chief Counsel, United States Customs Service, 1301 Constitution Avenue, NW., Washington, D.C. 20229 is the officer designated to receive any service of process.

(c) *Proceeding against officer or employee.* Under 5 U.S.C. 552(a)(4)(F), the Special Counsel, Merit Systems Protection Board, has authority, upon the issuance of a written finding by a court that the Customs officer or employee who was primarily responsible for withholding a record may have acted arbitrarily or capriciously, to initiate a proceeding to determine whether disciplinary action is warranted against that officer or employee. The Special Counsel, after investigation and consideration of the evidence submitted, submits its findings and recommendations to the Commissioner of Customs and the Secretary of the Treasury. The Special Counsel also sends copies of the findings and recommendations to the officer or employee or the representative of that officer or employee.

§103.10 FEES FOR SERVICES.

(a) *In general.* (1) The fees prescribed in this section are for search and duplication and under no circumstances is there a fee for determining whether an exemption can or should be asserted, for deleting exempt matter being withheld from records to be furnished, or for monitoring a requester's inspection of records made available in this manner.

(2) Customs publications which are available for sale through the Government Printing Office are on the shelves of the reading rooms and similar public inspection facilities, but those publications are not available for sale at those facilities. Those publications may be purchased from the Superintendent of Documents, U.S. Government

Printing Office, Washington, D.C. 20402. However, pages from those publications may be copied at the public inspection facilities in accordance with the schedule of fees set forth in paragraph (g) of this section.

(b) *When charged.* Unless charges are inapplicable, or are waived or reduced in accordance with paragraph (c) or (d) of this section, fees are charged in accordance with the schedule contained in paragraph (g) of this section for services rendered in responding to requests for records.

(c) *Services performed without charge*—(1) *Certain classes of records.* The Commissioner of Customs or any of the Commissioner's designees may determine, under the rulemaking procedures of 5 U.S.C. 553, which classes or records under their control may be provided to the public without charge, or at a reduced charge.

(2) *Records provided to government units.* Normally, in accordance with paragraph (d)(2)(ii) of this section, no charge is made for providing records to Federal, State, or foreign governments, international governmental organizations, or local governmental agencies or offices.

(d) *Waiver or reduction of fees*—(1) *Records unavailable or exempt.* Fees may be waived or reduced at the discretion of the Customs officer who determines the availability of records, if the record is not found or is exempt from disclosure.

(2) *Request for waiver or reduction of fees.* Fees may be waived or reduced on a case by case basis in accordance with this paragraph by the Customs officer who determines whether to release the record. A request for a waiver or reduction of fees must be in writing. The appropriate Customs officer shall waive or reduce a fee if the officer determines either that—

(i) The records are being requested by, or on behalf of, an individual who in writing, under penalty of perjury, demonstrates indigency to the satisfaction of the officer and that compliance with the request does not constitute an unreasonable burden on the United States Customs Service; or

(ii) A waiver or reduction of the fees is in the public interest because furnishing the information primarily benefits the general public.

(3) *Appeal from denial of request.* An appeal from a denial of a request for waiver or reduction of fees is decided under the criteria set forth in subparagraph (2) of this paragraph by the Director, Office of Regulations and Rulings. An appeal shall be in writing and mailed to the Director within 35 days of the denial of the initial request for waiver or reduction. An appeal under this paragraph is entitled to a prompt decision.

(e) *Avoidance of unexpected fees.* In order to protect a requester from unexpected fees, a requester is required to state in the request an agreement to pay the fees determined in accordance with paragraph (g) of this section or to state an acceptable upper limit on the cost of processing the request. If the fee for processing the request is estimated to exceed that limit, or if the requester has failed to state a limit and the cost is estimated to exceed $50 and there is no decision to waive or reduce the fees, the appropriate Customs officer shall—

(1) Inform the requester of the estimated costs;

(2) Extend an offer to the requester to confer with Customs personnel in an attempt to reformulate the request in a manner which will reduce the fee and still meet the needs of the requester; and

(3) Inform the requester that the running of the time period within which a determination on the request must be made is suspended until the request is reformulated in manner to reduce the cost or until the requester pays or agrees to pay the estimated cost.

(f) *Form of payment.* (1) A requester shall pay by a check or money order that is payable to the order of the United States Customs Service.

(2) If the estimated cost exceeds $50, the requester may be required to enter into a contract for the payment of actual costs, as determined in accordance with paragraph (g) of this section, which contract may provide for prepayment of the estimated costs in whole or in part.

(g) *Amount to be charged for specified services.* A fee for a service performed is imposed and collected as set forth in this paragraph. The Commissioner of Customs or the Commissioner's designee may set an appropriate fee for any service not described below. These extraordinary fees are imposed and collected pursuant to 31 U.S.C. 483a, subject to the constraints imposed by 5 U.S.C. 552(a)(4)(A).

(1) *Duplication.* (i) The charge for photocopies per page up to 8½″ x 14″ is at the rate of $0.10 each, except that no charge is imposed for copying 10 pages or less when less than one hour is spent in locating the records requested.

(ii) The charge for photographs, films and other materials is their actual cost. The United States Customs Service may furnish the records to be released to a private contractor for copying and charge the person requesting the records the actual cost of duplication charged by the private contractor. No fee is charged where the requester furnishes the supplies and equipment and makes the copies at the Government location.

(2) *Unpriced printed materials.* The charge for unpriced printed material, which is available at the location where requested and

which does not require duplication for copies to be furnished, is at the rate of $0.25 for each twenty-five pages or fraction thereof.

(3) *Search services.* The charge for services of personnel involved in locating records is $5 for each hour or fraction thereof, except that no charge is imposed for a search of less than one hour. Where a computer search is required because of the nature of the records sought and the manner in which such records are stored, the fee is $5 for each hour or fraction thereof of personnel time associated with the search plus the actual cost of extracting the stored information in the format in which it is normally produced. This actual cost of extracting information is based on computer time and supplies necessary to comply with the request.

(4) *Searches requiring travel or transportation.* The charge for transporting a record from one location to another, or for transporting a Customs officer or employee to the site of requested records when it is necessary to locate rather than examine the records, is the actual cost of the transportation.

§103.11 SPECIFIC CUSTOMS SERVICE RECORDS SUBJECT TO DISCLOSURE.

(a) *Administrative staff manuals and instructions.* Except as exempted by §103.12, all administrative staff manuals and instructions to staff that affect any member of the public, and indexes thereto, are available for public inspection and copying in the United States Customs Service public reference facilities (see § 103.1), including the following:

Catalogue of Customs Forms.
Computer printout of precedent cases decided by the Office of Regulations and Rulings, Headquarters, United States Customs Service.
Customs Information Exchange Rulings and Rulings issued by the Office of Regulations and Rulings organized chronologically by year, with identifying data deleted pursuant to §§ 103.12 and 103.14.
Customs Simplification Act (C.S.A.) Series Letters and Index (identifying information deleted pursuant to §§103.12 and 103.14).
Customs Statistical Manual.
Import Requirements on Articles Assembled Abroad from U.S. Components (Item 807.00, TSUS).
KWIC Index of United States Customs Service circulars letters, and supplementary monthly checklists.
Synopsis of Decisions of the Duty Assessment Process.

(b) *Other Customs records.* In general, all other documents issued by the Secretary of the Treasury, the Commissioner of Customs, or other officers of the Department of the Treasury or of the United States Customs Service in matters administered by the United States Customs Service, if reasonably described, and unless exempted from

disclosure under §103.12, are available. The classes of records of the United States Customs Service which may be made available under this paragraph upon written request submitted in accordance with the §103.5 include, but are not limited tc the following:

(1) Records relating to—(i) Comments submitted by private parties (which are not considered to include foreign governments) in response to a published notice of proposed rulemaking and of proposed changes in tariff classification, unless the submitter states that the information is privileged or confidential, giving reasons therefor, and the Commissioner of Customs agrees that the information contained therein is exempt from disclosure under §103.12;

(ii) Advisory committees on Customs matters;

(iii) Rosters of licensed customhouse brokers;

(iv) Names of individual licensed customhouse brokers;

(v) Names and titles of all Customs personnel;

(vi) Performance awards;

(vii) Suggestion awards;

(viii) The administration of and decisions concerning import quotas; and

(ix) Customs laboratory methods.

(2) Decisions concerning—(i) Matters arising under the Tariff Schedules of the United States (19 U.S.C. 1202);

(ii) Whether or not specific items, articles, or merchandise qualify for entry under the Fair Trade Act of 1959 (19 U.S.C. 1751 *et seq.*), and the disposition of articles previously entered under the Fair Trade Act; Customs participation and assistance at Trade Fairs;

(iii) The dutiable status of gifts pursuant to section 321, Tariff Act of 1930, as amended (19 U.S.C. 1321);

(iv) The eligibility of vehicles used in international traffic pursuant to section 332(a), Tariff Act of 1930 (19 U.S.C. 1322(a)), and other instruments of international traffic generally for duty-free entry;

(v) Prohibition from entry of merchandise produced by convict, forced, or indentured labor (19 U.S.C. 1307);

(vi) The entry or valuation of merchandise;

(vii) Liens in cases arising under section 564, Tariff Act of 1930, as amended (19 U.S.C. 1564);

(viii) Bills of lading, carriers' certificates, or rights in respect of merchandise, cases arising under section 483 or 484 (c), (h), or (i), Tariff Act of 1930, as amended (19 U.S.C. 1483, 1484 (c), (h), (i));

(ix) Trademarks, trade names, copyrights, patents, and related matters;

(x) Country of origin marking requirements of section 304, Tariff Act of 1930, as amended (19 U.S.C. 1304);

(xi) Psittacine or other birds, bird feathers, bird skins, monkeys, dogs, cats, and other animals and pets prohibited entry or subject to restrictions and controls on entry;

(xii) Entry of articles admitted temporarily free of duty under bond as provided in schedule 8, part 5C, Tariff Schedules of the United States (19 U.S.C. 1202), and entry of articles admitted temporarily free of duty under A.T.A. Carnets, as provided in § 114.22 (a) and (b) of this chapter;

(xiii) Tonnage taxes (regular, special, and discriminatory) and light money;

(xiv) The entry, clearance, and use of vessels and permits for them to proceed coastwise;

(xv) The regulation of vessels in the foreign, coastal, fishing, and other trades of the United States;

(xvi) The limitation of the use of foreign vessels in waters under the jurisdiction of the United States;

(xvii) Salvage operations by vessels within the territorial waters of the United States (46 U.S.C. 316);

(xviii) The assessment and collection of duties on equipment or repairs of vessels or aircraft under section 466, Tariff Act of 1930, as amemded (19 U.S.C. 1466), and the remission or refund of such duties;

(xix) Requirements for entry, clearance, and use of aircraft;

(xx) The arrival or departure and the use of motor vehicles, railway trains, or other vehicles;

(xxi) Adequacy of premises at Customs bonded warehouses and control of the merchandise stored therein;

(xxii) Use of protective Customs seals and labels; and

(xxiii) The itineraries of foreign vessels which had been submitted for an advisory ruling to determine whether the primary object of a contemplated voyage would be considered to unlawful coastwise trade (see § 4.80a(d) of this chapter).

§ 103.12 EXEMPTIONS.

Pursuant to 5 U.S.C. 552(b), the disclosure requirements of 5 U.S.C. 552(a) are not applicable to U.S. Customs Service records which relate to the following:

(a) *Matters kept secret pursuant to Executive Order.* Matters specifically authorized under criteria established by an Executive Order to be kept secret in the interest of national defense or foreign policy and which are, in fact, properly classified pursuant to such Executive Order (see 31 CFR Part 2).

(b) *Certain internal rules and procedures.* Information relating solely to the internal personnel rules and practices of an agency.

(c) *Matters exempt from disclosure by statute.* Information specifically exempted from disclosure by statute (other than 5 U.S.C. 552b), if the statute (1) requires that the matters be withheld from the public in such a manner as to leave no discretion on the issue, or (2) establishes particular criteria for withholding or refers to particular types of matters to be withheld.

(d) *Privileged or confidential information.* Trade secrets and commercial or financial information obtained from any person which is privileged or confidential.

(e) *Certain inter-agency or intra-agency correspondence.* Inter-agency or intra-agency memoranda or letters which would not be available by law to a private party in litigation with the agency.

(f) *Material involving personal privacy.* Personnel and medical files and similar files the disclosure of which would constitute a clearly unwarranted invasion of personal privacy.

(g) *Certain investigatory records.* Investigatory records compiled for law enforcement purposes, but only to the extent that the production of such records would—

(1) Interfere with enforcement proceedings;

(2) Deprive a person of a right to a fair trial or an impartial adjudication;

(3) Constitute an unwarranted invasion of personal privacy;

(4) Disclose the identity of a confidential source and, in the case of a record compiled by a criminal law enforcement authority in the course of a criminal investigation, or by an agency conducting a lawful national security intelligence investigation, confidential information furnished only by the confidential source;

(5) Disclose investigative techniques and procedures; or

(6) Endanger the life or physical security of law enforcement personnel.

§ 103.13 Segregability of records.

(a) *Reasonably segregable portions.* Where the record requested contains information which is exempt from disclosure under 5 U.S.C. 552(b) and section 103.12, the reasonably segregable portions of the record shall be made available to the requester. For purposes of this section, the term "reasonably segregable portions" means those portions of the record: (1) which are not exempt from disclosure by 5 U.S.C. 552(b) and section 103.12; (2) which, after deletion of the exempt material, still convey meaningful and nonmisleading information; and (3) from which it can reasonably be assumed that a skillful and knowledgeable person could not reconstruct the exempt portions.

350-343 01- 81 - 4

(b) *Petitions by American manufacturers, producers, or wholesalers.* Identifying data is not to be deleted from petitions filed by American manufacturers, producers, and wholesalers pursuant to section 516, Tariff Act of 1930, as amended (19 U.S.C. 1516). See Part 175 of this chapter.

§ 103.14 INFORMATION ON VESSEL MANIFESTS AND SUMMARY STATISTICAL REPORTS.

(a) *Disclosure to members of the press.* Although the following classes of information are exempt from the requirement of disclosure under the provisions of § 103.12, accredited representatives of the press, including newspapers, commercial magazines, trade journals, and similar publications may be permitted to examine vessel manifests and summary statistical reports of imports and exports and to copy therefrom for publication information and data not of a confidential nature, subject to the following rules:

(1) Of the information and data appearing on outward manifests, only the name and address of the shipper, general character of the cargo, number of packages and gross weight, name of vessel or carrier, port of exit, port of destination, and country of destination may be copied and published. However, if the Secretary of the Treasury makes an affirmative finding on a shipment-by-shipment basis that disclosure of the above information is likely to pose a threat of personal injury or property damage, that information shall not be disclosed to the public.

(2) Commercial or financial information, such as the names of the consignees, and marks and numbers shall not be copied from outward manifests or any other papers.

(3) Of the information shown on inward manifests, only the name of the consignee, the general character of the commodity, the quantity (or value), name of vessel, and the country of dispatch shall be copied and published. When an inward manifest shows both quantity and value of the commodity, either may be copied and published, but not both in any instance.

(b) *Review of data.* All copies and notations from inward or outward manifests shall be submitted for examination by a Customs officer designated for that purpose.

(c) *Disclosure to the public.* Members of the public shall be permitted to obtain information from, but not examine, vessel manifests, subject to the rules set forth in paragraphs (a) and (b) of this section. However, importers and exporters or their duly authorized brokers, attorneys, or agents may be permitted to examine manifests with respect to any consignment of goods in which they have a proper and legal interest as principal or agent, but shall not be permitted

to make any general examination of manifests or make any copies or notations from them except with reference to the particular importation or exportation in which they have a proper and legal interest.

(d) *Suspension of disclosure.* (1) Inward manifest. Except as provided in § 103.17, upon written application of a consignee or importer, access to the name of such consignee or importer, on an inward manifest will thereafter be refused.

(2) Outward manifest. If a shipper wishes to request confidential treatment by Customs of the shipper's name and address contained in an outward manifest, the following procedure shall be followed:

(i) A shipper, or authorized employee or official of the shipper, must submit a certification claiming confidential treatment of the shipper's name and address. The certification shall include the shipper's Internal Revenue Service Employer Number, if available.

(ii) There is no prescribed format for a certification.

(iii) The certification must be submitted to the Regional Commissioner for the Region in which the port of exportation is located.

(iv) Each certification will be valid for a period of two (2) years from the date of its submission to Customs.

(3) If any individual shall abuse the privilege granted him of examining inward and outward manifests or shall make any improper use of any information or data obtained from such manifests or other papers filed in the customhouse, both he and the party or publication which he represents shall thereafter be denied access to such papers.

§ 103.15 Sanctions for improper actions by Customs officers or employees.

(a) The improper disclosure of the confidential information contained in Customs documents, or the disclosure of information relative to the business of one importer or exporter that is acquired by a Customs officer or employee in an official capacity to any person not authorized by law or regulations to receive this information is a ground for dismissal from the United States Customs Service, suspension, or other disciplinary action, and if done for a valuable consideration subjects that person to criminal prosecution.

(b) Sanctions for improper denials of information by Customs officers or employees are set forth in § 103.9(c).

§ 103.16 Information concerning fines, penalties, and forfeitures cases.

Except as otherwise provided in these regulations or in other directives (including those published as Treasury Decisions), district

directors of Customs and other Customs officers shall refrain from disclosing facts concerning seizures, investigations, and other pending cases until Customs action is completed. After the penalty proceeding is closed by payment of the claim amount, payment of a mitigated amount, or judicial action, the identity of the violator, the section of the law violated, the amount of penalty assessed, loss of revenue, mitigated amount (if applicable), and the amount of money paid may be disclosed to the public by the appropriate district director of Customs. Public disclosure of any other item of information concerning such cases, whether open or closed, shall only be made in conformance with the procedures provided in § 103.5.

§ 103.17 TESTIMONY OR THE PRODUCTION OF DOCUMENTS IN COURT.

(a) *General.* In answer to a legal process or demand from a court issued on behalf of the United States or an officer thereof, Customs officers or employees shall produce in court, and may testify with respect to, any official Customs papers or documents demanded which are in Customs custody. When the process or demand is issued on behalf of a party other than the United States, Customs officers or employees shall produce in court, and may testify with respect to, those papers and documents, but only to the extent that the party on whose behalf the papers or documents are demanded is permitted under these regulations to inspect or copy those papers or documents. An exception to the above two rules may be made only on the written order of the Commissioner of Customs or the Commissioner's designee. When requested, copies may be authenticated pursuant to the provisions of section 1733, title 28, United States Code.

(b) *Request of Customs Court.* Except as stated in § 103.12, nothing in this part precludes Customs officers or employees from producing in the United States Customs Court, any Customs papers or documents, in Customs custody, or from testifying or otherwise rendering all proper assistance to the court in proceedings before it when request therefor is made by the court; nor from furnishing to counsel for the United States information in, and permitting inspection of, Customs papers and documents requested by such counsel, nor from testifying on behalf of the United States or otherwise assisting such counsel in the performance of official duties.

(c) *Subpoena or subpoena duces tecum.* Upon being served with a subpoena or subpoena duces tecum from a court or court officer calling for testimony or the production of papers or documents in cases not covered by paragraph (a) or (b) of this section, or in cases where the testimony or documents desired would disclose matters the disclosure of which would be contrary to these regulations, the Customs officer involved shall refer the matter to Headquarters for in-

structions, with a report that specifically describes the testimony or documents desired. The Customs officer involved shall include in that report his or her opinion on whether the giving of the testimony or the furnishing of the documents would disclose information not permitted to be disclosed under these regulations. That officer also shall state in what particulars, if any, the disclosure of the information and work incidental to that disclosure would interfere with the orderly conduct of Customs business. If instructions are not received prior to the date set for appearance or production of documents, or if the Commissioner of Customs or the Commissioner's designee declines to permit their production or the disclosure of the information contained therein or otherwise within the knowledge of the Customs officer or employee whose testimony is requested, the Customs officer or employee shall appear in court or before the officer concerned in answer to the subpoena and respectfully decline to produce the documents called for or to testify, except to the extent specifically authorized elsewhere in this section, citing this regulation as authority for the refusal. If the matter has not already been referred to Headquarters for instructions, the Customs officer or employee shall advise the court or officer that it will be so referred.

(d) *In camera inspection of records.* Nothing in this section authorizes Customs officers or employees to withhold records from a court, pursuant to its order, for *in camera* inspection to determine the propriety of claimed exemptions to disclosure.

(R.S. 251, as amended, sec. 624, 46 Stat. 759 (5 U.S.C. 301; 19 U.S.C. 66, 1624))

PART 152—CLASSIFICATION AND APPRAISEMENT OF MERCHANDISE

§ 152.42 [AMENDED]

Section 152.42(b) of the Customs Regulations (19 CFR 152.42(b)) is amended by substituting "103.12(d)" for "103.7(d)" in the last sentence.

(R.S. 251, as amended, sec. 624, 46 Stat. 759 (19 U.S.C. 66, 1624))

PART 175—PETITIONS BY AMERICAN MANUFACTURERS, PRODUCERS, AND WHOLESALERS

§ 175.21 [AMENDED]

Section 175.21(b) of the Customs Regulations (19 CFR 175.21(b)) is amended by substituting "103.11(b)" for "103.8(b)" and by substituting "103.12(d)" for "103.10".

(R.S. 251, as amended, sec. 624, 46 Stat. 759 (19 U.S.C. 66, 1624))

Parallel Reference Table

(THIS TABLE SHOWS THE RELATION OF SECTIONS IN NEW PART 103 TO 19 CFR PART 103)

Proposed section	*19 CFR section*
103.0	103.0.
103.1	103.1.
103.2(a)	New.
103.2(b)	New.
103.3(a)	New.
103.3(b)	New.
103.4(a)	New.
103.4(b)	New.
103.4(c)	New.
103.4(d)	103.4(b) New.
103.4(e)	New.
103.5(a)	103.2 (b), (c), and (d) New.
103.5(b)	103.2(e) New.
103.5(c)	103.2 (b) and (c) New.
103.5(d)	103.2 (a) New.
103.5(e)	103.2 (d) New.
103.5(f)	New.
103.5(g)	New.
103.5(h)	103.6(c).
103.6(a)	103.2(f), 103.3(a).
103.6(b)	New.
103.6(c)	New.
103.6(d)	New.
103.6(e)	103.4(d) New.
103.7(a)	103.5(a) New.
103.7(b)	New.
103.7(c)	103.5 (b) and (c) New.
103.8(a)	New.
103.8(b)	New.
103.9(a)	New.
103.9(b)	103.4(c)(2) New.
103.9(c)	New.
103.10(a)	New.
103.10(b)	103.9(b) New.
103.10(c)	103.9(c) New.
103.10(d)	New.
103.10(e)	New.
103.10(f)	New.

Proposed section	*19 CFR section*
103.10(g)	103.9(b) New.
103.11(a)	103.7.
103.11(b)	103.8 (a) and (b).
103.12(a)	103.10(a) New.
103.12(b)	103.10(b) New.
103.12(c)	New.
103.12(d)	103.10(d).
103.12(e)	103.10(e).
103.12(f)	103.10(f).
103.12(g)	103.10(g) New.
103.13(a)	New.
103.13(b)	New.
103.14(a)	103.11(a).
103.14(b)	103.11(b).
103.14(c)	103.11(c).
103.14(d)	103.11(d).
103.15(a)	103.12.
103.15(b)	New.
103.16	103.13.
103.17(a)	103.14(a).
103.17(b)	103.14(b).
103.17(c)	103.14(c).
103.17(d)	New.

Parallel Reference Table

(THIS TABLE SHOWS THE RELATION OF THE OLD SECTIONS TO THE NEW SECTIONS IN PART 103)

Old	*New*
103.0	103.0.
103.1	103.1.
103.2(a)	103.5(d); 103.6(a).
103.2 (b)-(d)	103.5 (a), (c), (e).
103.2(e)	103.5(b).
103.2(f)	103.6(a).
103.4(b)	103.4(d).
103.4(c)(2)	103.9(b).
103.4(d)	103.6(e).
103.5(a)	103.7(a).
103.5 (b), (c)	103.7(c).
103.6 (a), (b)	Deleted.
103.6(c)	103.5(h).
103.7	103.11(a).

Old	*New*
103.8 (a), (b)	103.11(b).
103.9(b)	103.10(b); 103.10(g).
103.9(c)	103.10(c).
103.10(a)	103.12(a).
103.10(b)	103.12(b).
103.10(d)	103.12(d).
103.10(e)	103.12(e).
103.10(f)	103.12(f).
103.10(g)	103.12(g).
103.11(a)	103.14(a).
103.11(b)	103.14(b).
103.11(c)	103.14(c).
103.11(d)	103.14(d).
103.12	103.15(a).
103.13	103.16.
103.14 (a)-(c)	103.17 (a)-(c).

United States Court of International Trade

One Federal Plaza
New York, N.Y. 10007

Chief Judge

Edward D. Re

Judges

Paul P. Rao
Morgan Ford
Scovel Richardson
Frederick Landis
James L. Watson
Herbert N. Maletz
Bernard Newman
Nils A. Boe

Senior Judge

Samuel M. Rosenstein

Clerk

Joseph E. Lombardi

Decisions of the United States Court of International Trade

(Slip Op. 81–66)

H. E. LAUFFER, CO., INC., PLAINTIFF *v.* UNITED STATES, DEFENDANT

Court No. 74–4–00885–S

Articles Chiefly Used for Preparing, Serving, or Storing Food or Beverages or Food or Beverage Ingredients, of Fine-grained Earthenware or Fine-grained Stoneware

[Judgment for Plaintiff]

(Decided July 22, 1981)

Murray Sklaroff for the plaintiff.

Stuart E. Schiffer, Acting-Assistant Attorney General; *Joseph I. Liebman*, Attorney in Charge, International Trade Field Office, Commercial Litigation Branch (*Susan Handler-Menahem* on the brief), for the defendant.

RAO, *Judge:* This case involves merchandise imported at New York in 1972 and 1973, consisting of articles described on the commercial invoices as "Anenome," "Karelia," "Rosemarin," "Saara," "Kosmos Brown," "Ruska," "Valencia" and "Oliivi."

The merchandise was classified as articles chiefly used for preparing, serving, or storing food or beverages, or food or beverage ingredients, of nonbone chinaware or of subporcelain, available in specified sets having an aggregate value of over $10 but not over $24 in item 533.65, TSUS as amended; or available in specified sets having an aggregate value of over $24 but not over $56 in item 533.66, TSUS, as amended.

The parties have stipulated that if this court has jurisdiction over this action, the merchandise is properly classifiable as articles chiefly used for preparing, serving, or storing food or beverages, or food or beverage ingredients, of fine-grained earthenware or fine-grained stoneware available in specified sets having an aggregate value of over $7 but not over $12 in item 533.26, TSUS, as amended, or available in specified sets having an aggregate value of over $12 in item 533.28, TSUS, as amended.

The jurisdictional question arises as a consequence of plaintiff's having filed two protests against the merchandise in three entries (entries 450637, 356439 and 304891). Entry 472635, also involved herein, is not the subject of a dual protest.

Pursuant to 19 U.S.C. § 1514(b)(1) [as in effect at the time of these entries] "only one protest may be filed for each entry of merchandise, except that where the entry covers merchandise of different categories, a separate protest may be filed for each category." The United States Court of International Trade [the U.S. Customs Court at the time this action was commenced] does not have jurisdiction of any action unless a protest has been filed as prescribed by section 514 of the Tariff Act of 1930, as amended [19 U.S.C. § 1514 (1976)]. 28 U.S.C. § 1582(c) (1976).

The sole issue before this court, therefore, is whether merchandise classifiable as articles used for food preparation, serving or storage of fine-grained earthenware or stoneware available in specified sets having an aggregate value between $7 and $12 and merchandise of the same composition and use but having an aggregate value of more than $12 per specified set is "of different categories."

The merchandise is "of different categories" and this court, accordingly, has jurisdiction in this case.

The word "category" is defined in *Webster's New Collegiate Dictionary*, C. & C. Merriam Co., 1973, as follows:

> 1 c: one of the fundamental or ultimate classes of entities or of language

2: a division within a system of classification.

It is also defined in *Webster's New International Dictionary of the English Language*, 2nd ed. (1956), as:

> 2. A class to which a certain assertion applies; a class or division formed by the nature of the considerations entertained or for the purposes of a given discussion or classification; * * * (see classification).

The Tariff Schedules themselves speak of "all articles imported into the customs territory of the United States" [general headnote 1, TSUS], the broadest category of merchandise for purposes of imposing tariffs, and very specific categories of merchandise; e.g. vegetables, reduced to flour, garlic, in item 140.60, TSUS. Therefore the merchandise in this action is of different categories, because it has different values, that is, the merchandise with a value between $7 and $12 is different from the merchandise of the same type but with a value of over $12.

The *Tariff Classification Study Explanatory and Background Materials*, Schedule 5 at page 86, discusses items 533.23, –.25 and –.27 (item 533.27 is encompassed in 533.26 and 533.28, effective January 1, 1968), and states:

> The existing "value-bracket" tariff descriptions for plates, cups, saucers and other articles adopted as a result of the trade-agreement concessions were aimed at separating tableware into three quality grades each of which would bear the same rate for all articles in the grade.* * *

This evidences a Congressional intent that tableware of different grades would be considered separately, that is, to be of different categories, based on differences in quality.

In the United States Tariff Commission's (now the United States International Trade Commission) *Summaries of Trade and Tariff Information*, Schedule 5, Volume 3 (1971), at page 102, it is stated that for tariff purposes, ware "available in specified sets (items 533.23, –.25, –.26, –.28) is considered dinnerware." In discussing United States imports of dinnerware the Tariff Commission stated at page 107:

> Dinnerware having a unit value of over $7 per 77-piece norm, which accounted for about 95 percent of the quantity of dinnerware imported during 1966–70, increased irregularly from 5.5 million dozen pieces, valued at $12.8 million in 1966 to 6.8 million dozen pieces, valued at $20.4 million in 1970. The United Kingdom and Japan together supplied most of the imported dinnerware valued over $7 per norm, while Japan alone supplied most of the ware valued at less that (sic) $7 per norm. [Footnote and table ommitted.]

While the *Summaries of Trade and Tariff Information* are not legislative history for the tariff schedules, having been promulgated subsequent to the enactment of the tariff schedules, the *Summaries* are indicia of Congressional intent. *American Bristle & Hair Drawing Co. et al.* v. *United States*, 59 CCPA 104, C.A.D. 1048, 458 F. 2d 524 (1972). The quoted statement evidences an intent to separate dinnerware having a unit value of over $7 per 77-Piece norm from that valued under $7 per norm by the Tariff Commission, and the norms were in different categories for the purpose of compilation of statistical and trade data.

It is not difficult to determine that dinnerware worth between $7 and $12 per set would be marketed and sold differently than dinnerware worth more than $12 per set, with different expectations on the part of the purchasers with respect to quality, performance, durability and desirability. Indeed, the marketing and sale of the different categories would be directed to different classes of purchasers.

This court does not decide that the involved merchandise is "of different categories" because it is encompassed in different items of the TSUS, as argued by plaintiff in its brief. None of the authorities relied on by the plaintiff supports such a conclusion. *International Seaway Trading Corp.* v. *United States*, 81 Cust. Ct. 92, C.D. 4773, 464 F. Supp. 380 (1978) involved rubber footwear with soles of material other than leather, with uppers of vegetable fibers. In considering whether the presumption of correctness attached to alternative categories of rubber and plastics within the same item number, the court concluded that the presumption attached to neither, and discussed the possibility that merchandise may fall within the same paragraph or item number. In the instant case, the issue is not whether the merchandise is encompassed in different categories within one item number, but whether it is encompassed in different items. The cited case is inapposite.

Webcor Electronics v. *United States*, 79 Cust. Ct. 137, C.D. 4725 (1977), relied on by defendant, involved dual protests of Customs' classification of merchandise described in the invoices as 8-track stereo tape players under item no. 685.30, TSUS and the assessment of a 10 percent surcharge under item 948.00, TSUS, on the identical merchandise. Identical merchandise is not involved in the instant case.

In *Russ Togs, Inc.* v. *United States*, 79 Cust. Ct. 119, C.D. 4722 (1977), the dual protests involved the issues of appraisement and classification of merchandise (jackets) not contended by the plaintiff to be of different categories.

It is the judgment of this court that the merchandise in issue, dinnerware of fine-grained earthenware or of fine-grained stoneware available

in specified sets having an aggregate value of over $7 but not over $12 is "of different categories" than dinnerware of the same composition but having an aggregate value of more than $12 per specified set, that the prohibition against dual protests contained in 19 U.S.C. §1514 is inapplicable in this case, and that jurisdiction is properly vested in this court.

Accordingly, judgment is granted in favor of plaintiff based on the facts previously stipulated to by the parties.

Decisions of the United States Court of International Trade

Abstracts

Abstracted Protest Decisions

DEPARTMENT OF THE TREASURY, *July 27, 1981.*

The following abstracts of decisions of the United States Court of International Trade at New York are published for the information and guidance of officers of the customs and others concerned. Although the decisions are not of sufficient general interest to print in full, the summary herein given will be of assistance to customs officials in easily locating cases and tracing important facts.

WILLIAM T. ARCHEY,
Acting Commissioner of Customs.

DECISION NUMBER	JUDGE & DATE OF DECISION	PLAINTIFF	COURT NO.	ASSESSED	HELD	BASIS	PORT OF ENTRY AND MERCHANDISE
				Par. or Item No. and Rate	Par. or Item No. and Rate		
P81/124	Richardson, J. July 20, 1981	Mattel, Inc.	75-5-01347	Item 737.90 or 737.15 17.5% Item 774.60 8.5% Without allowance under item 807.00	Items 807.00 and 737.90 or 737.15 17.5% Item 807.00/774.60 8.5% With cost or value of U.S. fabricated components deducted from full appraised value of imported articles into which they were assembled	Mattel, Inc. v. U.S. (C.A.D. 1248)	Los Angeles American goods returned; U.S. fabricated components invoiced as rubber bands, etc., assembled abroad into articles
P81/125	Richardson, J. July 20, 1981	F. W. Myers & Co., Inc.	72-8-01761-81	Item 608.05 0.3¢ per lb.	Item 608.02 12¢ per ton for merchandise entered in 1971; duty-free for subsequently entered merchandise	F. W. Myers & Co., Inc. v. U.S. (C.D. 4635)	Detroit Sponge iron powders

Decisions of the United States Court of International Trade

Abstracts

Abstracted Reappraisement Decisions

DECISION NUMBER	JUDGE & DATE OF DECISION	PLAINTIFF	COURT NO.	BASIS OF VALUATION	HELD VALUE	BASIS	PORT OF ENTRY AND MERCHANDISE
R81/270	Re, C.J. July 20, 1981	Audiovox Corp.	73-1-00050, etc.	Export value	Appraised values shown on entry papers less additions included to reflect currency revaluation	C.B.S. Imports Corp. v. U.S. (C.D. 4739)	New York Miscellaneous articles
R81/271	Re, C.J. July 20, 1981	Franklin Stores Corp.	73-5-01312	Export value	Appraised values shown on entry papers less additions included to reflect currency revaluation	C.B.S. Imports Corp. v. U.S. (C.D. 4739)	New York Miscellaneous articles

R81/272	Re, C.J. July 20, 1981	Marco Pol Imports Ltd.	74-1-00245, etc.	Export value	Appraised values shown on entry papers less additions included to reflect currency revaluation	C.B.S. Imports Corp. v. U.S. (C.D. 4780)	New York Miscellaneous articles
R81/273	Re, C.J. July 20, 1981	Nichimen Co., Inc.	75-11-02940, etc.	Export value	Appraised values shown on entry papers less additions included to reflect currency revaluation	C.B.S. Imports Corp. v. U.S. (C.D. 4779)	New York Miscellaneous articles
R81/274	Landis, J. July 20, 1981	Mitsubishi International Corporation	74-3-00707, etc.	American selling price	Appraised values less 23%, per pair	Agreed statement of facts	Los Angeles Footwear
R81/275	Landis, J. July 20, 1981	Mitsubishi International Corporation	74-6-01433, etc.	American selling price	Appraised values less 23%, per pair	Agreed statement of facts	Los Angeles Footwear

350-343 0 - 81 - 2

International Trade Commission Notices

Investigations by the U.S. International Trade Commission

DEPARTMENT OF THE TREASURY, *August 6, 1981.*

The appended notices relating to investigations by the U.S. International Trade Commission are published for the information of Customs officers and others concerned.

WILLIAM T. ARCHEY,
Acting Commissioner of Customs.

In the Matter of
CERTAIN MODULAR PUSHBUTTON SWITCHES AND COMPONENTS THEREOF } Investigation No. 337-TA-96

Notice to All Parties

Notice is hereby given that the prehearing conference and hearing in this case scheduled to commence on August 3, 1981 (46 Fed. Reg. 35394) are cancelled.

The Secretary shall publish this Notice in the Federal Register.

Issued: July 24, 1981.

JANET D. SAXON,
Administrative Law Judge.

In the Matter of
CERTAIN MODULAR PUSHBUTTON SWITCHES AND COMPONENTS THEREOF } Investigation No. 337-TA-96

Notice of Addition of International Telephone and Telegraph Company As a Party

AGENCY: U.S. International Trade Commission.

ACTION: Addition of a party.

SUMMARY: Upon consideration of Motion Docket 96–3, as certified to the Commission by the Administrative Law Judge (ALJ) on June 9, 1981 and the ALJ's recommendation that the motion be granted, the Commission has ordered that said motion is granted and that International Telephone and Telegraph Company is added as a party.

Copies of the Commission action and order are available to the public during official business hours (8:45 a.m. to 5:15 p.m.) at the Office of the Secretary, U.S. International Trade Commission, 701 E Street NW., Washington, D.C. 20436, telephone 202–523–0161.

FOR FURTHER INFORMATION CONTACT: Scott Daniels, Esq., Office of the General Counsel, U.S. International Trade Commission, telephone 202–523–0480.

Issued: July 28, 1981.

By order of the Commission.

KENNETH R. MASON,
Secretary

Notice of Investigation and Hearing

(TA–201–45)

FISHING RODS AND PARTS THEREOF

AGENCY: United States International Trade Commission.

ACTION: Following receipt of a petition on July 13, 1981, filed by nineteen U.S. manufacturers of fishing rods and parts thereof, the U.S. International Trade Commission on July 27, 1981, instituted an investigation (No. TA–201–45) under section 201(b) of the Trade Act of 1974 (19 U.S.C. 2251(b)) to determine whether fishing rods and parts thereof, provided for in item 731.15 of the Tariff Schedules of the United States, are being imported into the United States in such increased quantities as to be a substantial cause of serious injury, or the threat thereof, to the domestic industry producing an article like or directly competitive with the imported article.

EFFECTIVE DATE: July 13, 1981.

FOR FURTHER INFORMATION CONTACT: John MacHatton, Supervisory Investigator, U.S. International Trade Commission, Washington, D.C. 20436 (202–523–0439).

SUPPLEMENTARY INFORMATION:

Public hearing ordered. A public hearing in connection with this investigation will be held in Washington, D.C., at 10 a.m. e.d.t. on

Friday, October 2, 1981, in the Hearing Room, U.S. International Trade Commission Building, 701 E Street, NW. Requests to appear at the hearing should be filed in writing with the Secretary to the Commission at his office in Washington no later than the close of business Wednesday, September 23, 1981.

Prehearing procedures. To facilitate the hearing process, it is requested that persons wishing to appear at the hearing submit prehearing briefs enumerating and discussing the issues which they wish to raise at the hearing. An original and nineteen copies of such prehearing briefs should be submitted to the Secretary no later than the close of business Wednesday, September 23, 1981. Copies of any prehearing briefs submitted will be made available for public inspection in the Office of the Secretary. While submission of prehearing briefs does not prohibit submission of prepared statements in accordance with section 201.12(d) of the Commission's Rules of Practice and Procedure (19 CFR 201.12(d)), it would be unnecessary to submit such a statement if a prehearing brief is submitted instead. Any prepared statements submitted will be made a part of the transcript. Oral presentations should, to the extent possible, be limited to issues raised in the prehearing briefs.

A prehearing conference will be held on Friday, September 25, 1981, at 10 a.m. e.d.t. in Room 117 of the U.S. International Trade Commission Building.

Persons not represented by counsel or public officials who have relevant matters to present may give testimony without regard to the suggested prehearing procedures outlined above.

Other written submissions. Other written submissions, except for posthearing briefs, should be filed with the Secretary to the Commission prior to the public hearing. Commercial or financial data which are confidential should be clearly marked "Confidential Business Information" and should be submitted in accord with the requirements of section 201.6 of the Commission's Rules of Practice and Procedure (19 CRF 201.6). Submissions should also conform to the general requirements of section 201.8 of the Commission's rules (19 CFR 201.8).

Inspection of petition. The petition filed in this case is available for public inspection at the Office of the Secretary, U.S. International Trade Commission.

Issued: July 28, 1981.

By order of the Commission.

KENNETH R. MASON,
Secretary.

In the Matter of CERTAIN MASS FLOW DEVICES AND COMPONENTS THEREOF	Investigation No. 337–TA–91

Notice of Commission Request for Comments Concerning Settlement Agreement

AGENCY: U.S. International Trade Commission.

ACTION: Request for public comments on proposed termination of this investigation based on settlement agreement.

SUMMARY: On June 10, 1981, all parties to *Certain Mass Flow Devices and Components Thereof*, investigation No. 337–TA–91, filed a joint motion to terminate the investigation, based on a settlement agreement entered into on June 1, 1981, by complainant Tylan Corporation of Torrance, CA ("Tylan") and respondents Advanced Semiconductor Holding b.v. of the Netherlands and Advanced Semiconductor Materials America, Inc. of Phoenix, AZ (collectively referred to herein as "ASM"). This motion, if granted, would have the effect of terminating this investigation. This notice contains a nonconfidential synopsis of the agreement and seeks public comments upon it.

DATES: Comments will be considered if received within thirty (30) days of the date this notice appears in the Federal Register. Comments should conform with Commission Rule 201.8 (19 CFR § 201.8) and should be addressed to Kenneth R. Mason, Secretary, U.S. International Trade Commission, 701 E Street NW., Washington, D.C. 20436.

FOR FURTHER INFORMATION CONTACT: Jane Albrecht, Esq., Office of the General Counsel, U.S. International Trade Commission, 701 E Street NW., Washington, D.C. 20436; telephone 202–523–1627.

SUPPLEMENTARY INFORMATION: This investigation was instituted upon publication by the Commission of notice in the Federal Register on November 26, 1980 (45 F.R. 78843).

SYNOPSIS OF THE SETTLEMENT AGREEMENT

The settlement agreement in question settles all outstanding litigation involving Tylan and ASM before this and all other forums.

Tylan agrees for a specified sum of money to grant ASM a fully paid-up, royalty-free, non-exclusive, nontransferable and unassignable license for the practice of U.S. Letters Patent Nos. 3,650,505, 3,851,526, and 3,938,384, and their foreign counterparts (other than Tylan's Japanese patents and Japanese patent application). Similarly, for a

specified sum of money, Nippon Tylan agrees to deliver to ASM to a fully paid-up, royalty-free, non-exclusive, nontransferable and unassignable license to Japanese Patents Nos. 861655 and 970462 and Japanese Patent Application No. 114381/73 for the importation into or manufacture in Japan of devices to be sold only after such devices have been incorporated as components of systems or as spare or replacement parts in such systems.

ASM agrees not to contest or oppose in any manner the validity or enforceability of all of the above-mentioned patents. Additionally, Tylan agrees to sell to ASM and ASM agrees to accept delivery from Tylan of an agreed-upon number of units of Tylan's mass flow controllers within the next three years.

COMMENTS REQUESTED: In light of the Commission's duty to consider the public interest in this investigation, the Commission requests written comments from interested persons concerning the effect of the termination of this investigation based upon the settlement agreement upon (1) the public health and welfare, (2) competitive conditions in the U.S. economy, (3) the production of like or directly competitive articles in the United States, and (4) U.S. consumers. Written comments must be filed with the Secretary to the Commission no later than 30 days after publication of this notice in the Federal Register. The Commission will consider requests for oral argument or oral presentation on this matter if such requests are received in the Office of the Secretary not later than 15 days after publication of this notice in the Federal Register. Any peron desiring to submit a document (or portion thereof) to the Commission in confidence must request *in camera* treatment. Such requests should be directed to the Secretary of the Commission and must include a full statement of the reasons why the Commission should grant such treatment. The Commission will either accept such submission in confidence or return it. All nonconfidential written submissions will be open for public inspection at the Secretary's office.

Issued: July 29, 1981.

By order of the Commission.

KENNETH R. MASON,
Secretary.

In the Matter of
CERTAIN MOLDED-IN SANDWICH PANEL INSERTS AND METHODS FOR THEIR INSTALLATION } Investigation No. 337–TA–99

Notice of Addition of Two Respondents

AGENCY: U.S. International Trade Commission.

best copy available

ACTION: Addition of two parties respondent.

AUTHORITY: The authority for the Commission action in this matter is contained in section 337 of the Tariff Act of 1930, 19 § U.S.C. 1337, and 19 CFR § 210.22

SUMMARY: Notice is hereby given that the Commission has granted the motion of complainant to amend the complaint and notice of investigation to add Kyoei Trading Corp. (Kyoei), of Osaka, Japan, and Hariki Metal Industries (Hariki), also of Osaka, Japan, as respondents in the subject investigation.

SUPPLEMENTARY INFORMATION: On April 29, 1981, the Commission, upon receipt of complaint filed by Shur-Lok Corp., of Los Angeles, California, published in the Federal Register (46 F.R. 24034); Wed., Apr. 29, 1981, notice of an investigation to determine whether there is a violation of section 337(a) of the Tariff Act of 1930 in the importation into the United States of certain molded-in sandwich panel inserts, or in their sale, by reason of (1) the alleged infringement by said molded-in sandwich panel inserts of the sole claim of U.S. Letters Patent 3,182,015, (2) the alleged infringement of claims 1–4 of U.S. Letters Patent 3,271,498 and all four claims of U.S. Letters Patent 3,392,225 and the inducement of and/or contribution to said infringement, and (3) the alleged misappropriation of complainant's trade secrets. The complaint alleges that the effect or tendency of the aforementioned unfair methods of competition and unfair acts is to destroy or substantially injure an industry, efficiently and economically operated, in the United States.

On June 15, 1981, complainant filed a motion to amend the complaint and notice of investigation to add Kyoei and Hariki as parties respondents. The administrative law judge certified the motion to the Commission and recommended that it be granted. There was no opposition to the proposed amendments.

Any party wishing reconsideration of the Commission's action must do so within fourteen (14) days of service of the Commission order. Any such petition must be in accord with the Commission's Rules of Practice and Procedure (19 CFR § 210.56).

Copies of the Commission's Action and Order and any other public documents in this investigation are available for inspection during official working hours (8:45 a.m. to 5:15 p.m.) in the Office of the Secretary, United States International Trade Commission, 701 E Street NW., Washington, D.C. 20436, telephone 202–523–0161.

Notice of the institution of this investigation was published in the Federal Register of April 29, 1981 (46 F.R. 24034)

FOR FURTHER INFORMATION CONTACT: Clarease E. Mitchell, Esq., Office of the General Counsel, telephone 202–523–0148

Issued: August 3, 1981.

By order of the Commission.

KENNETH R. MASON,
Secretary.

Index

U.S. Customs Service

	T.D. No.
Treasury Decisions:	
Carrier bonds; CF 3587	81-206
Instruments of international traffic	81-210
Foreign currencies.	
Daily rates; July 20-24, 1981	81-208
Variances from quarterly rate	81-209
Reimbursable services	81-207
Customs Service Decisions:	
Classification:	
A "Cap" payment	81-175
Exemption from quota restraints	81-172
Molded plastic footwear	81-180
The dutiable status of financial assistance	81-174
Drawback:	
Allowance of drawback under 19 U.S.C. 1313(c)	81-176
Denial of drawback 19 CFR 22.13(a)	81-173
Machining a casting during a repair	81-179
Vessels:	
Application of 19 U.S.C. 1466 to foreign flag	81-178
The application of the coastwise laws	81-177
Vessels used to transport offshore fishing parties	81-171

U.S. GOVERNMENT PRINTING OFFICE : 1981

DEPARTMENT OF THE TREASURY
U.S. CUSTOMS SERVICE
WASHINGTON, D.C. 20229

OFFICIAL BUSINESS
PENALTY FOR PRIVATE USE, $300

POSTAGE AND FEES PAID
DEPARTMENT OF THE TREASURY (CUSTOMS)
(TREAS. 552)

15/34

Customs Bulletin

Regulations, Rulings, Decisions, and Notices concerning Customs and related matters

and Decisions

of the United States Court of Customs and Patent Appeals and the United States Court of International Trade

Vol. 15 AUGUST 24, 1981 No. 34

NEWARK PUBLIC LIBRARY
SEP 17 1981
U. S. GOVT. PUBS.
DEPOSITORY 376

This issue contains

T.D. 81-211 and T.D. 81-212
Slip Op. 81-67 and 81-68
Protest Abstracts P81/126 Through P81/138
Reap. Abstracts R81/276 Through R81/284
International Trade Commission Notices

THE DEPARTMENT OF THE TREASURY
U.S. Customs Service

T 1.11/3:

NOTICE

The abstracts, rulings, and notices which are issued weekly by the U.S. Customs Service are subject to correction for typographical or other printing errors. Users may notify the U.S. Customs Service, Logistics Management Division, Washington, D.C. 20229, of any such errors in order that corrections may be made before the bound volumes are published.

For sale by the Superintendent of Documents, U.S. Government Printing Office, Washington, D.C. 20402. Price: $2.25 (single copy domestic); $2.85 (single copy foreign). Subscription price: $85.00 a year domestic; $106.25 a year foreign.

U.S. Customs Service

Treasury Decisions

(T.D. 81-211)

Foreign Currencies—Daily Rates for Countries Not On Quarterly List

The Federal Reserve Bank of New York, pursuant to section 522(c), Tariff Act of 1930, as amended (31 U.S.C. 372 (c)), has certified buying rates for the dates and foreign currencies shown below. The rates of exchange, based on these buying rates, are published for the information and use of Customs officers and others concerned pursuant to Part 159, Subpart C, Customs Regulations (19 CFR 159, Subpart C).

Argentina peso:	
July 27–30, 1981	$0. 000211
July 31, 1981	.000207
Chile peso:	
July 27–31, 1981	$0. 025667
Colombia peso:	
July 27–31, 1981	$0. 018403
Greece drachma:	
July 27, 1981	$0. 016878
July 28–29, 1981	.016750
July 30, 1981	.016543
July 31, 1981	.016611
Indonesia rupiah:	
July 27–31, 1981	$0. 001585
Israel shekel:	
July 27, 1981	$0. 082645
July 28–31, 1981	.081967
Peru sol:	
July 27–31, 1981	$0. 002342
South Korea won:	
July 27–31, 1981	$0. 001456

(LIQ-03-01 O:C:E)

Dated: July 31, 1981.

KENNETH A. RICH,
Acting Chief,
Customs Information Exchange.

(T.D. 81-212)

Foreign Currencies—Variances From Quarterly Rate

The following rates of exchange are based upon rates certified to the Secretary of the Treasury by the Federal Reserve Bank of New York, pursuant to Section 522(C), Tariff Act of 1930, as amended (31 U.S.C. 372(c)), and reflect variances of 5 per centum or more from the quarterly rate published in Treasury Decision 81-183 for the following countries. Therefore, as to entries covering merchandise exported on the dates listed, whenever it is necessary for Customs purposes to convert such currency into currency of the United States, conversion shall be at the following rates.

Brazil cruziero:	
July 28-31, 1981	$0.010322
Japan yen:	
July 31, 1981	$0.004160
Republic of South Africa rand:	
July 28, 1981	$1.0535
July 29, 1981	1.0550
July 30, 1981	1.0498
July 31, 1981	1.0485
Thailand baht (tical):	
July 27-31, 1981	$0.043384

(LIQ-03-01 O:C:E)

Date: July 31, 1981.

KENNETH A. RICH,
Acting Chief,
Customs Information Exchange.

Recent Unpublished Customs Service Decisions

The following listing of recent administrative decisions issued by the Office of Regulations and Rulings, U.S. Customs Service, and not otherwise published, is published for the information of Customs officers and the importing community. Although the decisions are not of sufficient general interest to warrant publication as Treasury Decisions, the listing describes the issues involved and is intended to aid Customs officers and concerned members of the public in identifying matters of interest which recently have been considered by the Office of Regulations and Rulings.

A copy of any decision included in this listing, identified by its date and file number, may be obtained in a form appropriate for public distribution upon written request to the Office of Regulations and Rulings, Attention: Legal Retrieval and Dissemination Branch, Room 2404, U.S. Customs Service, 1301 Constitution Avenue NW., Washington, D.C. 20229. These copies will be made available at a cost to the requester of $0.10 per page. However, the Customs Service will waive this charge if the total number of pages copied is ten or less.

Decisions listed in earlier issues of the Customs Bulletin, through February 2, 1981 are available in microfiche format at a cost of $30.90 ($0.15 per sheet of fiche). It is anticipated that additions to the microfiche will be made quarterly and subscriptions are available. Requests for the microfiche now available and for subscriptions should be directed to the Legal Retrieval and Dissemination Branch. Subscribers will automatically receive updates as they are issued and will be billed accordingly.

Dated: August 12, 1981.

B. James Fritz,
Director, Regulations Control and Disclosure Law Division.

Date of decision	Number	Issue
06-18-81	055925	Classification: tissue dehydration unit (678.50)
06-05-81	065509	Classification: gear boxes used with orchard sprayers (662.45, 666.00)
06-05-81	065794	Classification: 24 karat gold bars mounted in frames attached to chains and used as pendants (605.20, 740.15)
05-27-81	065834	Classification: system for regulating the flow of molten steel into ingot molds (531.39, 674.10)
07-01-81	065883	Classification: boy's basketball shoe (700.60)
07-02-81	068534	Classification: moon boot shells (700.60)
06-22-81	068614	Classification: figures made from inedible bread dough (737.40)
07-20-81	105211	Vessels: a 24' rigid inflatable search and rescue craft is classifiable as an intangible pursuant to General Headnote 5(e), TSUS, and subject to duty-free entry
07-20-81	105223	Vessels: GSP eligibility and dutiable status of yachts and pleasure boats imported from Taiwan (696.05, 696.10)
07-02-81	542407	Value: A warranty is dutiable as a usual general expense under constructed value though labor on warranty is performed in the U.S.
06-25-81	542418	Transaction Value: sales from foreign vendors to a foreign buyer who resells to a related importer may qualify for transaction value if the merchandise, at time of purchase, is destined for the U.S. and if a buying agency exists
04-15-81	800429	Classification: organic ketone (427.64)
06-10-81	800633	Classification: ascorbic acid (437.82)
07-31-81	800689	Classification: components of an exterior vessel storage tank (664.10, 678.50)
06-10-81	800694	Classification: resorcinol resin (409.06)
06-16-81	800721	Classification: women's eyelet blouse (382.00)
06-11-81	800723	Classification: string puppet (737.22)
06-10-81	800727	Classification: porcelain dolls (737.22)
06-11-81	800733	Classification: model vehicle (737.15)
06-15-81	800736	Classification: men's mylar ski glove (735.06)
06-10-81	800737	Classification: printed circuit board (682.60)
06-23-81	800741	Classification: electronic games (734.20)
06-11-81	800743	Classification: scale model vehicles (737.07)
06-11-81	800746	Classification: inflatable vinyl boats (696.35, 790.39)
06-10-81	800749	Classification: hollow spike strips (657.25)
06-19-81	800756	Classification: automotive tool accessories comprised of wood (206.54)
06-10-81	800758	Classification: nylon rope (348.00, 348.05)
06-19-81	800759	Classification: children's slipper socks (700.60)
06-19-81	800763	Classification: artificial flowers (389.61)
06-25-81	800764	Classification: explosives and chemicals (408.00, 408.04, 408.08, 417.30, 425.32, 485.10, 485.50, 485.20, 485.40, 755.50)

Date of decision	Number	Issue
06-19-81	800766	Classification: clothesline (654.00, 657.25)
06-19-81	800774	Classification: portable video cassette recorder carrying case (685.40, 706.62)
06-15-81	800778	Classification: PVC handbags (706.62)
06-11-81	800781	Classification: laminated poplin ski glove (735.06)
07-06-81	800783	Classification: puncture repair kit (494.60, 523.35, 774.25)
06-16-81	800790	Classification: stainless steel or copper flexible tubing (657.25, 657.30)
06-11-81	800791	Classification: gold and silver plated insulated copper wire (688.04)
06-11-81	800797	Classification: plied flax yarn (305.09, 305.10)
06-23-81	800799	Classification: carbon steel bars (690.25)
06-15-81	800800	Classification: ropes of sisal, manila, hemp, man-made fibers and steel (315.30, 315.35, 315.50, 315.40, 315.55, 316.25, 316.30, 316.60, 348.05, 642.16)
06-15-81	800802	Classification: printed wall charts (273.35)
06-15-81	800805	Classification: three-wheeled vehicle without engine (692.10)
06-11-81	800806	Classification: natting of man-made fibers (352.80)
06-16-81	800807	Classification: keyboards for CRT data displays (676.52)
06-23-81	800809	Classification: traditional willow and tamorack geese decoys (207.00, 222.60, 222.64)
06-19-81	800814	Classification: cold formed carbon steel angles (609.80)
06-25-81	800815	Classification: women's underwear (378.15)
06-16-81	800816	Classification: chair used in treatment of back problems (727.02)
07-01-81	800818	Classification: road signalling and marking apparatus (685.70, 661.68, 678.50, 662.50, 692.16)
06-29-81	800819	Classification: prothesis made of chromium-cobalt (658.00)
06-16-81	800820	Classification: dodecyl benzyl chloride (402.80, 407.16)
06-23-81	800821	Classification: cotton and cotton/polyester blend tablecloths and napkins (366.46, 366.47)

United States Court of International Trade

One Federal Plaza
New York, N.Y. 10007

Chief Judge

Edward D. Re

Judges

Paul P. Rao
Morgan Ford
Scovel Richardson
Frederick Landis
James L. Watson
Herbert N. Maletz
Bernard Newman
Nils A. Boe

Senior Judge

Samuel M. Rosenstein

Clerk

Joseph E. Lombardi

Decisions of the United States Court of International Trade

(Slip Op. 81–67)

TEXAS INSTRUMENTS INCORPORATED, PLAINTIFF *v.* UNITED STATES, DEFENDANT

Court No. 78–10–01812

On Plaintiff's Motion for Summary Judgment and Defendant's Cross-Motion for Summary Judgment

[Plaintiff's motion denied; defendant's cross-motion granted.]

(Decided July 28, 1981)

Frederick L. Ikenson, Esq., for the plaintiff.

Stuart E. Schiffer, Acting Assistant Attorney General; *Joseph I. Liebman*, Attorney in Charge, International Trade Field Office, Commercial Litigation Branch, *Saul Davis*, Esq., for the defendant.

NEWMAN, *Judge*. The narrow and technical issue presented by this action affects one of the Government's most important international trade programs—the Generalized System of Preferences ("GSP"), 19 U.S.C. § 2461, *et seq*. See also General Headnote 3(c), Tariff Schedules of the United States ("TSUS"). We are called upon in this case to determine whether plaintiff's importation was entitled to duty-free entry under the GSP statute.

Plaintiff imported from Taiwan certain electronic components for cameras called "cue modules", which were entered at the port of Honolulu, Hawaii in May 1977. The District Director of Customs at Honolulu classified the merchandise as "other" parts of photographic cameras under item 722.34, TSUS, as modified by T.D. 68–9, and assessed duty at the rate of 10 per centum ad valorem. Plaintiff admits that the imported merchandise is properly classifiable as other parts of photographic cameras, as found by the District Director, but claims that the merchandise should have been classified under item A722.34, TSUS, and granted duty-free treatment under the GSP statute and General Headnote 3(c), TSUS.

Plaintiff has moved for summary judgment, and defendant has cross-moved for summary judgment. For the reasons stated hereinafter, plaintiff's motion is denied, and defendant's cross-motion is granted.

I

The pertinent facts are:

Each of the imported cue modules consists of a flexible circuit board to which have been assembled in Taiwan three integrated circuits ("ICs"), a photodiode, a capacitor, a resistor, and a jumper wire. The cost or value of the three ICs and photodiode in each cue module is not less than 35 percent of the appraised value of each cue module at the time of its entry into the United States.

Certain items were imported into Taiwan where they were then assembled into the ICs and photodiodes. These items consisted of silicon slices containing a multitude of fabricated electronic chips, lead frame strips, mold compound, gold wire on spools and chip mounting material, either epoxy or gold preforms. The chips were separated by a "scribe and break" operation. Subsequently, each chip was mounted (and by use of epoxy or gold preform made to adhere conductively) to a section of a lead frame strip. Pieces of gold wire were used to provide an electrical connection from various areas on the chip to various areas on each lead frame strip section. Plastic mold compound was then liquified and molded under pressure over each section of

lead frame strip containing a bonded and connected chip (or, in one instance, two bonded and connected chips). After the mold compound hardened into a protective covering, the lead frame strips were trimmed and severed into a multitude of individual devices. The devices, at this stage, were finished ICs and photodiodes.

Each cue module was produced in Taiwan by assembling three ICs and one photodiode (themselves produced in Taiwan, as described above) together with one resistor, one capacitor, and a jumper wire to a flexible circuit board.

II

General Headnote 3(c), TSUS, reads, so far as relevant:

> Whenever an eligible article is imported into the customs territory of the United States directly from a country or territory listed in subdivision (c)(i) of this headnote, it shall receive duty-free treatment, unless excluded from such treatment by subdivision (c)(iii) of this headnote, provided that, in accordance with regulations promulgated by the Secretary of the Treasury:
>
> (A) the sum of (1) the cost or value of the materials produced in the beneficiary developing country plus (2) the direct costs of processing operations performed in such country is not less than 35 percent of the appraised value of such article at the time of its entry into the customs territory of the United States; See also 19 U.S.C. § 2463(b).

The applicable GSP regulations are:

> Section 10.176(a), Customs Regulations [19 CFR § 10.176 (a)]:
>
> (a) *Merchandise produced in one beneficiary developing country.* Merchandise which is the growth, product, manufacture, or assembly of a beneficiary developing country and which is imported directly from such beneficiary developing country may qualify for duty-free entry under the Generalized System of Preferences only if the sum of the cost or value of the materials produced in the beneficiary developing country, plus the direct costs of processing operations performed in such country, is not less than 35 percent of the value of the article as appraised in accordance with section 402 or 402a, Tariff Act of 1930, as amended (19 U.S.C. 1401a, 1402). For purposes of this paragraph, the term 'country' does not include an association of countries which is treated as one country under § 10.171(b), but does include a country which is a member of any such association.

> Section 10.177(a), Customs Regulations [19 CFR § 10.177(a)]:
>
> (a) *'Produced in the beneficiary developing country' defined.* For purposes of §§ 10.171 through 10.178, the words produced in the beneficiary developing 'country' refer to the constituent materials of which the eligible article is composed which are either:

(1) Wholly the growth, product, or manufacture of the beneficiary developing country; or
(2) Substantially transformed in the beneficiary developing country into a new and different article of commerce.

Plaintiff argues that the assembly of the silicon slices, lead frame, gold wire, etc. (which were imported into Taiwan) into the ICs and photodiodes constituted the substantial transformation of constituent materials into new articles of commerce within the purview of 19 CFR § 10.177(a)(2). Defendant contends that the cost of the ICs and photodiodes contained in each cue module does not qualify for inclusion in the statutory 35 percent standard, for the reasons that: (1) the items imported into Taiwan were "United States fabricated components" or "articles" rather than "materials" prior to shipment to Taiwan; (2) in any event, the assembly of the components in Taiwan into the cue modules did not "substantially transform" them into new articles of commerce.

Defendant's position in the present case is succinctly stated in 10 Cust. Bull. 176, 178, T.D. 76–100 (1976):

> [When articles are] produced by the joining and fitting together of components [, they] are not considered substantially transformed constituent materials. Articles of this kind may well have been substantially transformed, but they are not produced from substantially transformed constituent materials. *Under this criterion partially completed components which are completed and assembled in the beneficiary developing country into finished articles or components do not qualify as substantially transformed constituent materials. By the same token, most assembly operations and operations incidental to assembly will not qualify.* For example, various electronic components and a bare but otherwise finished circuit board are imported into a beneficiary developing country and there assembled by soldering into an assembled circuit board for a computer. Although substantially transformed, the fabricated unit is not a substantially transformed constituent material of the computer, the exported eligible article produced in the beneficiary developing country. [Emphasis supplied.]

III

The imported cue modules were classified under item 807.00, TSUS, and assessed with duty on the basis of the appraised value less the United States cost of the fabricated components of United States origin. The gravamen of plaintiff's claim is that the cost or value of the "materials" imported into Taiwan should be included in the Taiwanese value added costs for purposes of duty-free treatment under the GSP statute and regulations. It is defendant's contention that the GSP statute and the pertinent Customs Regulations preclude the utilization of United States (or any non-Taiwanese) fabricated components that were assembled to form a completed

part or article in determining whether the 35 percent value added requirement was fulfilled, since fabricated components are not "constituent materials". In essence, defendant urges that products which are "fabricated components" for the purposes of item 807.00 are not "materials" for purposes of the GSP.

I agree with defendant's argument. The GSP statute limits duty-free entry to those "eligible articles" of a BDC which:

> (1) were directly imported from the BDC to the United States, and
>
> (2) possessed "*materials*" produced in the BDC that amounted to, together with the direct cost of processing performed in the BDC, at least 35% of the appraised value of the "article."

The use of the term "article" to refer to imported merchandise, and use of the term "material" to refer to the value added requirement for the "eligible article" in the BDC, clearly demonstrate a Congressional intent to differentiate between "articles" on the one hand and "materials" on the other hand. In essence, then, the statute and regulations provide bifurcated requirements for GSP treatment relative to the origin of the imported merchandise.

As a threshold requirement, the imported "article" must of course, be produced in the BDC. However, the imported "eligible article" must not only be a product of the BDC, but it must also possess a "cost or value of *materials* produced in the BDC" and/or "direct cost in processing" that is at least 35 percent of the appraised value of the "eligible article".

19 CFR § 10.177(a) limits the inclusion in the value added portion of the eligible article to material which was the growth, product, or manufacture of the BDC, or to material which had been substantially transformed in the BDC into a new and different article of commerce. Hence, while the assembly of fabricated components, rather than materials, may be relevant in determining whether the "eligible article" was a product of the BDC, assembly of fabricated components is not relevant respecting the 35 percent value added requirement.

The short of the matter is: the GSP statute and pertinent regulations preclude the inclusion of fabricated components produced outside the BDC and assembled in the BDC in the "cost or value of the materials produced in the beneficiary developing country" to determine the 35 percent value added requirement. Consequently, the value of the ICs and photodiodes cannot be included in the figures for the "cost of materials" and "direct costs of processing" to determine whether these figures are not less than 35 percent of the appraised value of the cue modules.

For the foregoing reasons, plaintiff's motion for summary judgment is denied; defendant's cross-motion for summary judgment is granted; and it is ordered that this action be and hereby is dismissed.

(Slip Op. 81–68)

EISEMAN-LUDMAR CO., INC., PLAINTIFF *v.* UNITED STATES, DEFENDANT

(Court No. 76–1–00117)

FUR FELT—HEADWEAR

I. Merchandise consisting of fur felts imported by the plaintiff in rectangular shapes approximating 18″ by 45″ was sold by the plaintiff to domestic hat manufacturers for their use in the manufacture of army officer hats.

II. Evidence having been presented as to the use of the imported merchandise sold by the plaintiff only, the court is unable to find that the subject merchandise is of a class or kind chiefly used in headwear "For men or boys," as defined in the inferior heading to item 703.35, Tariff Schedules of the United States.

[Judgment for defendant.]

(Decided July 28, 1981)

Fitch, King & Caffentzis (*Richard C. King* at the trial and on the brief) for the plaintiff.

Stuart E. Schiffer, Acting Assistant Attorney General; *Joseph I. Liebman*, Attorney in Charge, International Trade Field Office, Commercial Litigation Branch (*Robert H. White* at the trial and on the brief), for the defendant.

BOE, *Judge*. The subject merchandise described in the invoices as "fur felts" was imported by the plaintiff from Japan and entered at the port of New York between December 27, 1974 and July 16, 1975. Upon liquidation the merchandise was classified under item 798.00, TSUS, by similitude to item 124.60, TSUS, as modified by T.D. 68–9, providing:

SCHEDULE 7, PART 14

	Any article, not provided for elsewhere in these schedules:	
	Which is similar in the use to which it may be applied to any article or articles enumerated in any of the foregoing provisions of these schedules as chargeable with duty:	
798.00	Most resembling as to use a particular enumerated article chargeable with duty	The same rate of duty as the particular enumerated article which it most resembles as to use.

SCHEDULE 1, PART 5, SUBPART B

	Other furskins, raw or not dressed, or dressed:	
	* * * * * * *	
	Dressed:	
	* * * * * * *	
124.60	Dyed:	
	Plates, mats, linings, strips, crosses, or similar forms.....	10% ad val.

The plaintiff contends that the merchandise in question is classified under item 703.35, TSUS, as modified by T.D. 68–9. The relevant statutory provisions provide:

SCHEDULE 7, PART 1, SUBPART B

Subpart B headnote:

1. For the purposes of this subpart—

(a) the term "*headwear*" includes hats, caps, berets, bonnets, hoods, and all other head coverings, of whatever material composed (*including* bodies, forms, plateaux, manchons, and shapes for headwear), designed for human wear, except infants' knit headwear, but does not include mufflers, scarves, shawls, mantillas, veils, and similar articles; hair nets; hair ornaments; or wigs and similar articles; * * * [Emphasis supplied.]

	Headwear, of fur not on the skin:	
	For men or boys:	
	* * * * * * * *	
703.35	Valued over $30 per dozen.....	$2.75 per doz. + 4% ad val.
	For other persons:	
	* * * * * * *	
703.35	Valued over $30 per dozen.....	$3.40 per doz. + 5% ad val.

In its answer, the defendant asserts as an alternative claim that the merchandise in question is classified under item 186.20, TSUS, at the rate of 15% ad val. and as a second alternative claim that the subject merchandise is classifiable under item 703.55, TSUS, as modified by T.D. 68–9.

By prior order of this court under date of June 29, 1979, in which plaintiff's motion for summary judgment and defendant's cross-motion for summary judgment were denied, the record in the cause of action of *Eiseman-Ludmar Co.* v. *United States*, 73–6–01552, 75 Cust. Ct. 1, C.D. 4603 (1975), has been incorporated into the record of the

within proceedings, pursuant to the motion of the plaintiff and the consent thereto by the defendant.

In addition to the evidence relating to the subject merchandise and the manner of its processing prior to its exportation from Japan presented in the proceedings incorporated herein, the following facts with respect to the subject merchandise, its processing and its subsequent use are deemed established without contradiction in the present proceedings. The rabbit fur from which the subject merchandise is made is imported into Japan for use by the manufacturer, the Fuji Company, after the same has been cut from the skin. The testimony of Mr. Kusumoto, managing director of the Fuji Company, establishes that the subject merchandise was formed in a cylindrical or cone shape and there-after slit in order to produce a flat rectangular sheet of felt which at the time of importation was of a size of approximately 18" by 45". The merchandise as manufactured met specifications required by the United States Military Service and after importation was sold by the plaintiff only to domestic companies for the manufacture of United States Army officer hats.

Having failed to find a definition of the term "manchon" in lexicographic sources, the plaintiff, in its effort to establish the classification of the subject merchandise under item 703.35, TSUS, places principal reliance on the Brussels Nomenclature. The similarity between the provisions therein and the Tariff Schedules of the United States and particularly headnote 1, subpart B, as the same relates to headwear, is, indeed, significant. The Explanatory Notes to Section XII, Chapter 65 of the Brussels Nomenclature (1955) relating to Headgear and Parts Thereof provide in pertinent part:

> 65.01 HAT-FORMS, HAT-BODIES AND HOODS OF FELT, NEITHER BLOCKED TO SHAPE NOR WITH MADE BRIMS; PLATEAUX AND MANCHONS (INCLUDING SLIT MANCHONS), OF FELT
>
> * * * * * * *
>
> (B) The heading also includes:
>
> * * * * * * *
>
> (2) *Felt Manchons*—usually made of fur on a cylindrical form (about 40 cm in height and about 100 cm in circumference) by a similar suction process to that used for making fur-felt cones. They are normally used by milliners, and are classified in this heading whether in cylinders or slit into rectangular form.

The court recognizes the use of this source in determining the meaning of terms contained in the provisions thereof which are similar to the provisions contained in the Tariff Schedules of the United States. *J. E. Bernard & Co.* v. *United States*, 60 Cust. Ct. 296, C.D. 3372 (1968). From the evidence presented in this proceeding the court acknowledges that the subject merchandise at the

time of importation may have borne the characteristics of a "slit manchon" as contemplated by headnote 1, subpart B, part 1, schedule 7. However, the burden of the plaintiff in sustaining its claimed classification is not fulfilled solely by demonstrating that the subject merchandise falls within the definition of "headwear" provided for in headnote 1, subpart B. The superior heading, under which item 703.35, TSUS, is included—"headwear, of fur not on the skin," is limited by the inferior heading thereto—"For men or boys." Thus, in conformity with the chief use defined in the inferior heading of the statute, the plaintiff likewise has the burden to establish that the imported merchandise would be of a class or kind of slit manchons of fur felt chiefly used in headwear "For men or boys."

It is undisputed that the subject merchandise in its manufacture conformed to the specifications required by the United States Army relating to materials to be used in Army officers' hats. It likewise appears undisputed that the plaintiff sells the merchandise in question only to military hat manufacturers in the United States of which there are a total of five or six in number. Although Mr. Larsen, sales manager and president of the plaintiff, testified that no "fur felts" other than the subject merchandise, represented by Exhibit 1, were used by the military, he subsequently amplified his testimony by stating:

> A. My testimony is we only import fur felt to be used for the military. I don't know what the rest of the market uses. That's not my business. R. 39.

Mr. Larsen further acknowledged that women's military hats and berets are made from fur felt hoods of blue or white color. Whether the specifications by the military for such women's headwear are the same as for the subject merchandise imported by the plaintiff was not known by him.

It likewise appears from the testimony of the import specialist, Mr. Eyskens, that in his investigation and inquiries as to the characteristics of "manchons" and their uses, he learned that these articles were used in the manufacture of headwear for "—men, ladies—whatever." R. 66. In a response to an inquiry with respect to the meaning of the term "manchons" and their use made by Mr. Eyskens to an "old timer in the trade," a letter particularly describing the article bearing this seldom-used name was submitted by the plaintiff in evidence. Plaintiff's Exhibit 8. Of particular interest is paragraph 2 thereof in which the writer referred to the historical use of "manchons" in the manufacture of ladies' headwear:

> This article, which is felted in a similar way to ordinary fur felt hoods or capelines, was formerly used extensively in the manufacture of ladies' headwear. Generally the article was cut

> into a flat piece and then using the article like a piece of cloth, patterns would be cut and stitched together to make a hat. In this way it was used differently from a fur felt hood or capeline where the entire hat was usually blocked in one piece and only then cut to accommodate a particular shape.

From the evidence submitted the court is unable to find that the subject merchandise is of a class or kind of slit manchons of fur felt chiefly used in headwear "For men or boys." As hereinbefore stated the testimony of plaintiff's principal witness, Mr. Larsen, clearly indicated that his knowledge is restricted only to the use of the imported merchandise by his own company and that he possessed no knowledge as to the use employed with respect to merchandise of the same class or kind by others. On the contrary, all of the evidence reflects that slit manchons of fur felt could be and were used in the manufacture of ladies hats. The fact that the plaintiff imported the merchandise in question only for sale to domestic companies in thier manufacture of United States Army officers' hats cannot serv to bring the imported merchandise within the limiting provisions of plaintiff's claimed classification, item 703.35, TSUS. *W. A. Gleeson* v. *The United States*, 58 CCPA 17, 432 F. 2d 1403 (1970); *E. Dillingham, Inc.* v. *The United States*, 54 CCPA 121, C.A.D. 922 (1967).

At the conclusion of the trial in the instant action, plaintiff moved to amend its complaint alleging classification of the subject merchandise under item 703.35, TSUS, by similitude. Although the court sustained defendant's objection to plaintiff's motion as being untimely, it is evident that a classification under item 703.35, TSUS, by similitude, cannot be sustained.

Paragraph 1559, Tariff Act of 1930, was amended by the Customs Simplification Act of 1954 (68 Stat. 1136) by the terms of which "use" has been designated the principal factor governing classifications by similitude.

Thus, where the subject merchandise is precluded from classification under item 703.35, TSUS, because of the limiting provision appurtenant thereto, it cannot be relieved from this use requirement by the application of the similitude provisions of the statute. As stated in *United States* v. *Steinberg Bros.*, 47 CCPA 47, C.A.D. 727 (1959):

> No application of the similitude provision of the statute can put merchandise into a classification from which it is expressly excluded. At 50.

It appearing to the court, therefore, that the plaintiff has failed in its burden to establish its claimed classification with respect to the subject merchandise, the protest of the plaintiff, accordingly, is overruled and the above-entitled action dismissed.

Let judgment be entered accordingly.

Decisions of the United States Court of International Trade

Abstracts

Abstracted Protest Decisions

DEPARTMENT OF THE TREASURY, *August 3, 1981.*

The following abstracts of decisions of the United States Court of International Trade at New York are published for the information and guidance of officers of the customs and others concerned. Although the decisions are not of sufficient general interest to print in full, the summary herein given will be of assistance to customs officials in easily locating cases and tracing important facts.

WILLIAM T. ARCHEY,
Acting Commissioner of Customs.

DECISION NUMBER	JUDGE & DATE OF DECISION	PLAINTIFF	COURT NO.	ASSESSED	HELD	BASIS	PORT OF ENTRY AND MERCHANDISE
				Par. or Item No. and Rate	Par. or Item No. and Rate		
P81/126	Richardson, J. July 27, 1981	Dae Woo Int'l. America Corp.	80-3-00527	Item 737.25 28%	Item 737.30 9%	Agreed statement of facts	New York Stuffed toy hugging animals; value as a unit exceeds 10¢ per inch of height

P81/127	Richardson, J. July 27, 1981	ITT Semiconductors	78-7-01246, etc.	Item 687.60 6% without allowance under item 807.00	Items 687.60/ 807.00 6% with allowance for cost or value of silicon dice or chips	Texas Instruments, Incorporated v. U.S. (Abs. P75/653, aff'd C.A.D. 1178) I.T.T. Semiconductors v. U.S. (Abs. P78/11	West Palm Beach (Miami) American goods returned; integrated circuits and transistors with U.S. components incorporated abroad
P81/128	Richardson, J. July 27, 1981	Ozen Sound Devices	78-11-01922	Item 737.90 or 737.95 17.5%	Item 724.25 5%	Judgment on the pleadings	New York Plastic miniature records
P81/129	Richardson, J. July 27, 1981	Premier Gear & Machine Works	81-1-00051	Item 680.59 16.3% + $1.04 each	Item 682.60 6.9% District director ordered to reliquidate accordingly and to refund excess duties plus interest from date of filing of summons (1-19-81) until the date of refund in accordance with 28 U.S.C. § 2644	Judgment on the pleadings	Portland, Oreg. "A.C. Variable Speed Drive"

DECISION NUMBER	JUDGE & DATE OF DECISION	PLAINTIFF	COURT NO.	ASSESSED	HELD	BASIS	PORT OF ENTRY AND MERCHANDISE
				Par. or Item No. and Rate	Par. or Item No. and Rate		
P81/130	Richardson, J. July 27, 1981	Uniroyal, Inc.	78-10-01768	Item 700.60 20%	Item 700.35 8.5%	Agreed statement of facts	New York Various styles of leather footwear
P81/131	Richardson, J. July 27, 1981	Zayre Corp.	80-5-00717	Item 676.20 5%	Item A676.20 Duty free pursuant to GSP	Agreed statement of facts	Atlanta Calculating machines; products of an eligible beneficiary country
P81/132	Newman, J. July 27, 1981	A. N. Deringer, Inc., a/c Uniroyal, Inc.	78-1-00010	Item 657.20 9.5%	Item 772.65 4%	Uniroyal, Inc., c/o A. N. Deringer, Inc. v. U.S. (Abs. P80/59)	Champlain-Rouses Point (Ogdensburg) Rubber hose, pipe or tubing in various lengths with attached fittings
P81/133	Newman, J. July 27, 1981	A. N. Deringer, Inc., a/c Uniroyal, Inc.	78-1-00176	Item 657.20 9.5%	Item 772.65 4%	Uniroyal, Inc., c/o A. N. Deringer, Inc. v. U.S. (Abs. P80/59)	Champlain-Rouses Point (Ogdensburg) Rubber hose, pipe or tubing in various lengths with attached fittings
P81/134	Newman, J. July 27, 1981	A. N. Deringer, Inc., a/c Uniroyal, Inc.	78-1-00179	Item 657.20 9.5%	Item 772.65 4%	Uniroyal, Inc., c/o A. N. Deringer, Inc. v. U.S. (Abs. P80/59)	Champlain-Rouses Point (Ogdensburg) Rubber hose, pipe or tubing in various lengths with attached fittings

P81/135	Newman, J. July 27, 1981	Stone and Downer	78-10-01532	Item 608.52 10.5%, plus additional duties under items 607.01 and 607.02 on chromium and molybdenum content	Item 609.82 2% + 0.1¢ per lb., plus additional duties, *supra*	Overton & Co. v. U.S. (C.D. 4875)	Boston Hot rolled, sectional steel shapes, alloyed; not annealed, drilled, punched, nor otherwise advanced
P81/136	Newman, J. July 27, 1981	Stone and Downer	79-10-01535	Item 608.52 10.5%, plus additional duties under items 607.01 and 607.02 on chromium and molybdenum content	Item 609.82 2% + 0.1¢ per lb., plus additional duties, *supra*	Overton & Co. v. U.S. (C.D. 4875)	Boston Hot rolled, sectional steel shapes, alloyed; not annealed, drilled, punched, nor otherwise advanced
P81/137	Newman, J. July 27, 1981	Uniroyal, Inc.	80-3-00558, etc.	Item 657.25 9.5%	Item 772.65 4%	Uniroyal, Inc., c/o A. N. Deringer, Inc. v. U.S. (Abs. P80/59)	Champlain-Rouses Point (Ogdensburg) Rubber hose, pipe or tubing in various lengths with attached fittings
P81/138	Newman, J. July 28, 1981	Stone and Downer	79-10-01534	Item 608.52 10.5%, plus additional duties under items 607.01 and 607.02 on chromium and molybdenum content	Item 609.82 2% + 0.1¢ per lb., plus additional duties, *supra*	Overton & Co. v. U.S. (C.D. 4875)	Boston Hot rolled, sectional steel shapes, alloyed; not annealed, drilled, punched, nor otherwise advanced

Decisions of the United States Court of International Trade

Abstracts

Abstracted Reappraisement Decisions

DECISION NUMBER	JUDGE & DATE OF DECISION	PLAINTIFF	COURT NO.	BASIS OF VALUATION	HELD VALUE	BASIS	PORT OF ENTRY AND MERCHANDISE
R81/276	Re, C.J. July 28, 1981	Campus Casuals of California.	74-5-01165, etc.	Export value	Invoiced unit prices less nondutiable charges (if any) included therein.	C.B.S. Imports Corp. v. U.S. (C.D. 4739)	Los Angeles Wearing apparel
R81/277	Re, C.J. July 28, 1981	Cole of California	74-2-00360, etc.	Export value	Invoiced unit prices less nondutiable charges (if any) included therein.	C.B.S. Imports Corp. v. U.S. (C.D. 4739)	Los Angeles Wearing apparel
R81/278	Re, C.J. July 28, 1981	Monarch Knit & Sportswear.	74-2-00575, etc.	Export value	Invoiced unit prices less nondutiable charges (if any) included therein.	C.B.S. Imports Corp. v. U.S. (C.D. 4739)	Los Angeles Wearing apparel

R81/279	Re, C.J. July 28, 1981	Nissho-Iwai American Corp.	74-8-02182, etc.	Export value	Appraised values specified on entry papers by liquidating officer, less additions included which reflect currency revaluation.	C.B.S. Imports Corp. v. U.S. (C.D. 4739)	Los Angeles Miscellaneous articles.
R81/280	Re, C.J. July 28, 1981	Sheridan Creations Inc.	78-10-01837	Export value	Appraised values shown on entry papers, less additions included to reflect currency revaluation.	C.B.S. Imports Corp. v. U.S. (C.D. 4739)	New York Wearing apparel, etc.
R81/281	Re, C.J. July 28, 1981	Superscope, Inc.	74-8-02120, etc.	Export value	Invoiced unit prices less nondutiable charges (if any) included therein	C.B.S. Imports Corp. v. U.S. (C.D. 4739)	Los Angeles Stereo radio components
R81/282	Re, C.J. July 28, 1981	Supreme Cutlery Corp.	77-11-04776	Export value	Appraised values shown on entry papers, less additions included to reflect currency revaluation	C.B.S. Imports Corp. v. U.S. (C.D. 4739)	New York Flatware, etc.
R81/283	Re, C.J. July 28, 1981	U.S. Suzuki Motor Corp.	74-7-01753	Export value	Invoiced unit prices less nondutiable charges (if any) included therein	C.B.S. Imports Corp. v. U.S. (C.D. 4739)	Los Angeles Motorcycles
R81/284	Richardson, J. July 28, 1981	Mitsubishi International Corporation	75-2-00404, etc.	American selling price	Appraised values less 23%, per pair	Agreed statement of facts	New York Footwear

International Trade Commission Notices

Investigations by the U.S. International Trade Commission

DEPARTMENT OF THE TREASURY, *August 13, 1981.*

The appended notices relating to investigations by the U.S. International Trade Commission are published for the information of Customs officers and others concerned.

WILLIAM T. ARCHEY,
Acting Commissioner of Customs.

Investigation No. 731–TA–48 (Preliminary)

CERTAIN AMPLIFIER ASSEMBLIES AND PARTS THEREOF FROM JAPAN

AGENCY: United States International Trade Commission.

ACTION: Institution of preliminary antidumping investigation.

SUMMARY: The U.S. International Trade Commission hereby gives notice of the institution of investigation No. 731–TA–48 (Preliminary) to determine whether there is a reasonable indication that an industry in the United States is materially injured, or is threatened with material injury, or the establishment of an industry in the United States is materially retarded, by reason of imports from Japan of certain amplifier assemblies and parts thereof, which are allegedly sold or likely to be sold in the United States at less than fair value (LTFV). For purposes of this investigation, certain amplifier assemblies are defined as radio frequencey power amplifier assemblies, and parts thereof, specially designed for transmission in the C, X, and Ku bands from fixed earth stations to communications satellites, as provided for in item 685.29 of the Tariff schedules of the United States.

EFFECTIVE DATE: July 24, 1981.

FOR FURTHER INFORMATION CONTACT: Mr. Patrick Magrath, Office of Investigations, U.S. International Trade Commission, Room 348, 701 E Street NW., Washington, D.C. 20436; telephone 202-523-0283.

SUPPLEMENTARY INFORMATION: On July 24, 1981, petitions were simultaneously filed with the U.S. Department of Commerce and the U.S. International Trade Commission by counsel representing Aydin Corp., Fort Washington, Pa., alleging that certain amplifier assemblies and parts thereof from Japan are being sold in the United States at LTFV and that an industry in the United States is being materially injured or threatened with material injury by reason of such imports.

Accordingly, pursuant to section 733(a) of the Tariff Act of 1930 (19 U.S.C. 1673b(a)), the Commission is instituting preliminary antidumping investigation No. 731–TA–48 (Preliminary) to determine whether a reasonable indication of such injury exists. The Commission must make its determination within 45 days after the date on which the petition was received, or in this case by September 8, 1981. The investigation will be conducted according to the provisions of part 207, subpart B, of the Commission's Rules of Practice and Procedure (19 CFR 207).

Written submissions. Any person may submit to the Commission a written statement of information pertinent to the subject of the investigation. A signed original and nineteen (19) true copies of each submission must be filed at the Office of the Secretary, U.S. International Trade Commission Building, 701 E Street NW., Washington, D.C. 20436, on or before August 24, 1981. All written submissions except for confidential business data will be available for public inspection.

Any business information for which confidential treatment is desired shall be submitted separately. The envelope and all pages of such submissions must be clearly labeled "Confidential Business Information." Confidential submissions and requests for confidential treatment must conform with the requirements of section 201.6 of the Commission's Rules of Practice and Procedure (19 CFR 201.6).

For further information concerning the conduct of the investigation and rules of general application, consult the Commission's Rules of Practice and Procedure, part 207, subparts A and B (19 CFR 207), and part 201, subparts A through E (19 CFR 201).

Conference. The Director of Operations of the Commission has scheduled a conference in connection with this investigation for 10 a.m., e.d.t., on Wednesday, August 19, 1981, at the U.S. International Trade Commission Building. Parties wishing to participate in the conference should contact the supervisory investigator for this investigation, Mr. Lynn Featherstone (202–523–0242). It is anticipated that parties in support of the petition for the imposition of antidumping duties and parties opposed to such petition will each be collectively allocated one (1) hour within which to make an oral presentation at

the conference. Further details concerning the conduct of the conference will be provided by the supervisory investigator.

Inspection of the petition. The petition filed in this case is available for public inspection at the Office of the Secretary, U.S. International Trade Commission.

This notice is published pursuant to section 207.12 of the Commission's Rules of Practice and Procedure (19 CFR 207.12).

By order of the Commission.

Issued: July 29, 1981.

KENNETH R. MASON,
Secretary.

Index

U.S. Customs Service

	T.D. No.
Foreign currencies:	
Daily rates; July 27–31, 1981	81–211
Variances from quarterly rates; July 27–31, 1981	81–212

DEPARTMENT OF THE TREASURY
U.S. CUSTOMS SERVICE
WASHINGTON, D.C. 20229

OFFICIAL BUSINESS
PENALTY FOR PRIVATE USE, $300

POSTAGE AND FEES PAID
DEPARTMENT OF THE TREASURY (CUSTOMS)
(TREAS. 552)

U.S. GOVERNMENT PRINTING OFFICE: 1981

15/35

Customs Bulletin

Regulations, Rulings, Decisions, and Notices concerning Customs and related matters

and Decisions

of the United States Court of Customs and Patent Appeals and the United States Court of International Trade

Vol. 15 SEPTEMBER 2, 1981 No. 35

NEWARK PUBLIC LIBRARY

SEP 15 1981

U. S. GOVT. PUBS.
DEPOSITORY 376

This issue contains

T.D. 81-213 Through 81-218
C.S.D. 81-181 Through 81-190
Slip. Op. 81-69 Through 81-73
Protest Abstract P81/139
Reap. Abstract R81/285
International Trade Commission Notices

THE DEPARTMENT OF THE TREASURY
U.S. Customs Service

T1. 11/3:

NOTICE

The abstracts, rulings, and notices which are issued weekly by the U.S. Customs Service are subject to correction for typographical or other printing errors. Users may notify the U.S. Customs Service, Logistics Management Division, Washington, D.C. 20229, of any such errors in order that corrections may be made before the bound volumes are published.

For sale by the Superintendent of Documents, U.S. Government Printing Office, Washington, D.C. 20402. Price: $2.25 (single copy domestic); $2.85 (single copy foreign). Subscription price: $85.00 a year domestic; $106.25 a year foreign.

U.S. Customs Service

Treasury Decisions

(T.D. 81-213)

Bonds

Approval and discontinuance of consolidated aircraft bonds (air carrier blanket bonds), Customs Form 7605

The following consolidated aircraft bonds have been approved or discontinued as shown below. The symbol "D" indicates that the bond previously outstanding has been discontinued on the month, day, and year represented by the figures which follow. "PB" refers to a previous bond, dated as represented by the figures in parentheses immediately following, which has been discontinued. If the previous bond was in the name of a different company or if the surety was different, the information is shown in a footnote at the end of the list.

Dated: August 12, 1981

Name of principal and surety	Date term commences	Date of approval	Filed with district director/area director/amount
Dominicana de Aviacion C. por A., Santo Domingo, Dominican Republic; National Union Fire Ins. Co. of Pittsburgh, PA (PB 12/5/72) D 8/2/80 [1]	June 3, 1981	June 9, 1981	J.F.K. Airport $100,000

[1] Surety is American Home Assurance Company.

The foregoing principal has not been designated as a carrier of bonded merchandise.

BON-3-01

MARILYN G. MORRISON,
Director,
Carriers, Drawback and Bonds Division.

19 CFR Part 177

(T.D. 81-214)

Tariff Classification: Ornamented and Not Ornamented Wearing Apparel

AGENCY: U.S. Customs Service, Department of the Treasury.

ACTION: Notice announcing the application of a court decision to the tariff classification of certain merchandise.

SUMMARY: This notice advises the public of the manner in which the Customs Service will apply the principles announced by the U.S. Court of Customs and Patent Appeals in *The Ferriswheel* v. *United States* to certain specified garments. The rejection by the court of the so-called "traditional feature" doctrine will result in the classification by Customs of certain western-style shirts as ornamented. Certain raincoats having epaulets will continue to be classified as not ornamented. Certain shirts with hanger loops, previously classified as ornamented because of the presence of such loops, will hereafter be classified as not ornamented. The classification of military-style and bush/safari garments with epaulets will be determined on a case-by-case basis.

EFFECTIVE DATES: The change in classification with respect to western-style shirts, military style and bush/safari garments with epaulets, described below, will be effective (120 days from the date of publication of this notice in the Federal Register). The change in classification with respect to shirts with hanger loops, as described below, will be effective (the date of publication of this notice in the Federal Register).

FOR FURTHER INFORMATION CONTACT: Philip Robins, Classification and Value Division, U.S. Customs Service, 1301 Constitution Avenue, NW., Washington, D.C. 20229 (202-566-8181).

SUPPLEMENTARY INFORMATION:

BACKGROUND

In classifying wearing apparel for Customs purposes, the question often arises whether or not such apparel is ornamented or not ornamented. Generally, ornamented wearing apparel is subject to a higher rate of duty than not ornamented wearing apparel.

On February 21, 1980, the United States Customs Court issued its decision in *The Ferriswheel* v. *United States*, C.D. 4844, concerning the ornamentation of certain wearing apparel. The court held that

Scottish Highland ceremonial jackets with traditional (but primarily decorative) epaulets, and braid which simulates buttonholes, were ornamented wearing apparel. In view of this decision, Customs published a notice in the Federal Register on August 14, 1980 (45 FR 54085), advising the public that Customs was reviewing its uniform and established practices of classifying certain garments with traditional, but primarily decorative, features as not ornamented wearing apparel and of classifying garments with simulated functional features also as not ornamented. The notice requested comments from interested parties on whether the *Ferriswheel* case required Customs to change its practice. Final action on the notice was postponed pending the decision of the U.S. Court of Customs and Patent Appeals on the appeal of the *Ferriswheel* case.

On March 12, 1981, the U.S. Court of Customs and Patent Appeals issued its decision in *The Ferriswheel* v. *United States*, C.A.D. 1260. The court (1) reaffirmed its previously stated rule that in order for a feature to constitute ornamentation for tariff purposes, that feature must be primarily decorative as opposed to being primarily functional; (2) rejected the idea that a clearly ornamental feature on a garment did not constitute ornamentation because it was traditional to the garment; and (3) held that functional capability, together with the appropriateness of that function to the garment, determines whether or not a feature is functional.

In rejecting the "traditional feature" doctrine of classification, the court expressly rejected the premise that garments with clearly ornamental features were classifiable as not ornamented because those features were necessary to make the garments authentic. Such garments, according to the court, must be judged by the same standards as other garments.

It has been the practice of Customs to classify certain western-style shirts with traditional but, in Customs view, primarily decorative, overlaid front and back shoulder yokes as not ornamented on the basis that the overlaid yokes were necessary to create an "authentic" western shirt. This premise has been clearly invalidated by the U.S. Court of Customs and Patent Appeals in the *Ferriswheel* case. Therefore, Customs believes it is required to apply to western-style shirts the principle expressed by the court that garments with traditional features "must be judged by the same standards as other articles of wearing apparel." That standard or test, as expressed in *Ferriswheel* and previously in numerous other court decisions, is whether the ornamental or decorative aspect of a feature on a garment outweighs the functional or utilitarian nature of that feature—whether the feature is primarily decorative or primarily functional.

In this regard, Customs has expressed the view in a number of

rulings that the overlaid yokes on western-style shirts are usually primarily decorative and only incidentally functional. Accordingly, those yokes would, except for the practice of classification that developed by reason of their being traditional on that type of shirt, normally be considered ornamentation.

All of the comments received in response to the notice published by Customs in the Federal Register on August 14, 1980, were completely reviewed. Several of the comments received relating to overlaid yokes on western-style shirts concerned factors which Customs could not legally consider, *e.g.*, the economic impact of classifying the shirts under the ornamented provisions of the tariff schedules. On the other hand, some of the commenters presented arguments which dealt with the legally relevant question of the various functions which the overlaid yokes serve and the utility of overlaid yokes generally.

After thoroughly considering all of the views expressed, it is Customs position that while there are some functional purposes served by the overlaid yokes, they do not appear to be sufficient to overcome the highly visible impact, which is decidely ornamental, that overlaid yokes usually present on garments.

In view of the principles set forth in the court decision, western-style shirts will be classified in accordance with the same standards as other garments and all western-style shirts with *primarily decorative* overlaid fabric yokes entered, or withdrawn from warehouse, for consumption after (120 days from the date of publication of this notice), will be classified under the ornamented wearing apparel provisions in the Tariff Schedules of the United States (19 U.S.C. 1202). All prior administrative rulings issued by Customs concerning the classification of western-style shirts with decorative overlaid yokes which are not in accordance with the principles stated in *Ferriswheel*, are, pursuant to section 177.9(d)(1), Customs Regulations (19 CFR 177.9(d)(1)), hereby revoked. The classification of such garments will, from (120 days from the date of publication of this notice), be determined on the characteristics of each garment.

As as result of this action, Customs anticipates that most western-style shirts with overlaid yokes will be classified as ornamented because the utility of the overlaid yokes is usually incidental to the decorative appearance they present. However, due to styling and construction differences, Customs recognizes that some overlaid yokes may, in fact, be primarily functional and, therefore, would not constitute ornamentation.

In the *Ferriswheel* case, the U.S. Court of Customs and Patent Appeals stated that a functional feature does not cease to be functional because it is not used by most wearers. Customs believes

that an overly broad interpretation and application of that principle is neither reasonable nor intended by the court. Where a feature, once functional, has virtually ceased to have any utility on a garment except in a few isolated instances, that feature is subject to the same standards as traditional features—whether it is primarily decorative or primarily functional. In making this determination, Customs will consider such a feature to be primarily functional on a garment if (1) the feature has a functional capability which is appropriate to the garment, and (2) there is credible evidence the feature is actually used and that such use is more than a fugitive use.

It has been Customs practice to classify certain types of garments with epaulets (raincoats, certain bush/safari jackets, and certain military-style garments) as not ornamented, even though in the view of Customs, the epaulets were primarily decorative. This practice was based on the idea that epaulets were traditional features on those garments. Because that premise is no longer valid, those garments must now be classified in accordance with the same standards as other garments.

Customs does not believe that the decision in the *Ferriswheel* case should affect the existing practice of classification of raincoats with functional epaulets. After reviewing the submissions received in response to the notice of August 14, 1980, Customs now believes that all prior rulings stating that any functional use of epaulets on raincoats constituted a "fugitive use", were in error. The submissions make it clear that the epaulets are actually used by a significant number of wearers of those raincoats. Therefore, raincoats with epaulets will continue to be classified as not ornamented barring other features on the garments which would cause a contrary classification.

Few of the comments received dealt with, or even mentioned, the classification of military-style and bush/safari garments with epaulets. In view of the invalidation of the "traditional feature" doctrine, the same principles of classification that apply to other garments will apply to military-style and bush/safari garments entered, or withdrawn from warehouse, for consumption after (120 days from the date of publication of this notice). From that date, the classification of those and all other garments with epaulets will be determined on a case-by-case basis based on the individual characteristics of each garment. Those characteristics will include, but not be limited to, the construction of the fabric comprising the garment (knit or woven), the weight of that fabric, and the styling and intended purpose of the garment. For example, knit garments or ones made from loosely woven fabrics would not normally have primarily functional epaulets. Further, garments designed for formal or dress wear or for sleeping

would usually not have epaulets which are primarily functional. All prior administrative rulings by Customs classifying military-style and bush/safari garments with epaulets as either ornamented or not ornamented, which are not in accordance with the principles stated in *Ferriswheel*, are, pursuant to section 177.9(d)(1), Customs Regulations (19 CFR 177.9(d)(1)), hereby revoked.

The U.S. Court of Customs and Patent Appeals in the *Ferriswheel* case did not decide the question of whether garments with simulated features should be classified as ornamented. Therefore, Customs, at this time, will not change its existing practice of classifying garments with simulated features which are located where the real features would normally be found and are no more decorative than the real features normally are, as not ornamented.

The *Ferriswheel* case has prompted Customs to review other aspects of the ornamentation question, one of which involves the classification of shirts with hanger loops located on the center of the back areas. It does not appear that such loops, if made from the same fabric as the garments on which they are located, are primarily decorative. Rather, it appears that loops of this nature are actually used to hang the garment. Accordingly, pursuant to section 177.9(d)(1), Customs Regulations (19 CFR 177.9(d)(1)), all prior rulings classifying shirts as ornamented due solely to the presence of hanger loops in the center of the back areas, are revoked. Customs will classify shirts with such loops as not ornamented, provided that no other features of the garment would cause a contrary classification.

AUTHORITY

This notice is being published in accordance with section 315(d), Tariff Act of 1930, as amended (19 U.S.C. 1315(d)), and section 177.10(c)(1), Customs Regulations (19 CFR 177.10(c)(1)).

DRAFTING INFORMATION

The principal author of this notice was Robert J. Pisani, Regulations and Information Division, U.S. Customs Service. However, personnel from other Customs offices participated in its development.

Dated: August 17, 1981.

WILLIAM T. ARCHEY,
Acting Commissioner of Customs.

[Published in the Federal Register, Aug. 21, 1981 (46 F.R. 42446)]

(T.D. 81-215)

Foreign Currencies—Daily Rates for Countries Not on Quarterly List

The Federal Reserve Bank of New York, pursuant to section 522(c), Tariff Act of 1930, as amended (31 USC 372 (c)), has certified buying rates for the dates and foreign currencies shown below. The rates of exchange, based on these buying rates, are published for the information and use of Customs officers and others concerned pursuant to Part 159, Subpart C, Customs Regulations (19 CFR 159, Subpart C).

Argentina peso:	
August 3–4, 1981	$0.000211
August 5–6, 1981	.000207
August 7, 1981	.000203
Chile peso:	
August 3–4, 1981	$0.025667
August 5, 1981	.025733
August 6 1981	.025667
August 7, 1981	.025575
Colombia peso:	
August 3–7, 1981	$0.018403
Greece drachma:	
August 3, 1981	$0.016327
August 4, 1981	.016273
August 5, 1981	.016287
August 6, 1981	.016300
August 7, 1981	.016103
Indonesia rupee:	
August 3–7, 1981	$0.001585
Israel shekel:	
August 3–7, 1981	$0.081900
Peru sol:	
August 3–7, 1981	$0.002342
South Korea won:	
August 3, 1981	$0.001455
August 4–6, 1981	.001454
August 7, 1981	.003289

(LIQ-03-01 O:C:E)

Date: August 7, 1981.

KENNETH A. RICH,
Acting Chief,
Customs Information Exchange.

352-986 O - 81 - 2

(T.D. 81-216)

Foreign Currencies—Variances From Quarterly Rate

The following rates of exchange are based upon rates certified to the Secretary of the Treasury by the Federal Reserve Bank of New York, pursuant to Section 522(C), Tariff Act of 1930, as amended (31 USC 372(c)), and reflect variances of 5 per centum or more from the quarterly rate published in Treasury Decision 81-183 for the following countries. Therefore, as to entries covering merchandise exported on the dates listed, whenever it is necessary for Customs purposes to convert such currency into currency of the United States, conversion shall be at the following rates.

Brazil cruziero:	
August 3-5, 1981	$0.010322
August 6-8, 1981	.010090
Denmark krone:	
August 7, 1981	$0.125196
France franc:	
August 7, 1981	$0.164474
Hong Kong dollar:	
August 4, 1981	$0.168976
August 5, 1981	.168492
August 6, 1981	.168634
August 7, 1981	.168492
India rupee:	
August 7, 1981	$0.109170
Ireland pound:	
August 7, 1981	$1.4360
Japan yen:	
August 3, 1981	$0.004075
August 4, 1981	.004063
August 5, 1981	.004151
August 6-7, 1981	Quarterly
Republic of South Africa rand:	
August 3, 1981	$1.0428
August 4, 1981	1.0405
August 5, 1981	1.0500
August 6, 1981	1.0420
August 7, 1981	1.0435
Switzerland franc:	
August 3, 1981	$0.454959
August 4, 1981	.453721
August 5, 1981	Quarterly

August 6, 1981	$0.456850
August 7, 1981	.457666
Thailand baht (tical):	
August 3–7, 1981	$0.043384
United Kingdom pound:	
August 3, 1981	$1.8015
August 4, 1981	1.7935
August 5, 1981	1.8055
August 6, 1981	1.7980
August 7, 1981	1.7905

(LIQ–03–01 O:C:E)

Date: August 6, 1981.

KENNETH A. RICH,
Acting Chief,
Customs Information Exchange.

(T.D. 81–217)

Bonds

Approval and discontinuance of Carrier's Bonds, Customs Form 3587

Bonds of carriers for the transportation of bonded merchandise have been approved or discontinued as shown below. The symbol "D" indicates that the bond previously outstanding has been discontinued on the month, day, and year represented by the figures which follow. "PB" refers to a previous bond, dated as represented by figures in parentheses immediately following, which has been discontinued. If the previous bond was in the name of a different company or if the surety was different, the information is shown in a footnote at the end of the list.

Dated: August 17, 1981.

Name of principal and surety	Date of bond	Date of approval	Filed with district director/area director/amount
ABC-Trans National Transport, Inc., 201 11th Ave., New York, NY; freight forwarder; Sentry Ins., A Mutual Co. D 7/23/81	Dec. 18, 1975	Jan. 12, 1976	Chicago, Ill. $50,000
Air Service Consolidator Transport, Inc., 795 Beahan Rd., Rochester, NY; motor contract; Old Republic Ins. Co.	Sept. 11, 1980	June 11, 1981	Buffalo, NY $25,000

Name of principal and surety	Date of bond	Date of approval	Filed with district director/area director/amount
Belford Trucking Co., Inc., P.O. Box 270, Ocala, FL; motor carrier; Hartford Accident & Indemnity Co. (PB 3/10/78) D 5/18/81 [1]	Dec. 18, 1980	May 18, 1981	Miami, FL $25,000
Wayne Daniel Truck, Inc., P.O. Box 303, Mt. Vernon, MO; motor carrier; The Travelers Indemnity Co. (PB 9/25/79) D 7/30/81 [2]	July 30, 1931	July 30, 1981	St. Louis, MO $50,000
Angel D. Aguiar, dba: David Transport, 1501 East 8th Court, Hialeah, FL; motor carrier; St. Paul Fire & Marine Ins. Co.	May 18, 1981	June 29, 1981	Miami, FL $50,000
E T Freight Lines, Gould St. & E. 46th St., Bayonne, NJ; motor carrier; Peerless Ins. Co. D 6/25/81	Mar. 5, 1980	Apr. 4, 1980	Newark, NJ $50,000
Evans Delivery Co., Inc., P.O. Box 268, Pottsville, PA; motor carrier; The Aetna Casualty & Surety Co. D 7/30/81	May 23, 1978	June 6, 1978	Philadelphia, PA $25,000
GTL Transport Co., Inc., P.O. Box 1944, Suffolk, VA; motor carrier; Selected Risks Ins. Co.	June 15, 1981	July 9, 1981	Norfolk, VA $50,000
Gateway Transportation Co., Inc., 455 Park Plaza Dr., LaCrosse, WI; motor carrier; The Aetna Casualty & Surety Co. (PB 7/12/79) D 8/6/81 [3]	July 12, 1981	July 13, 1981	Milwaukee, WI $25,000
Gullett-Gould Ltd., P.O. Box 406, Union City, IN; motor carrier; Protective Ins. Co. D 2/29/80	Jan. 7, 1980	Jan. 15, 1980	Nogales, AZ $25,000
Harbor Cartage Inc., 312 West End S. Detroit, MI; motor carrier; Sentry Ins., a Mutual Co.	June 18, 1981	June 29, 1981	Detroit, MI $50,000
Klausner Transportation Co., Inc., 101 N. Avenue 18, Los Angeles, CA; motor carrier; Washington International Ins. Co.	July 22, 1980	June 10, 1981	Los Angeles, CA $50,000
Long Transportation Co., Inc., 3755 Central Ave., Detroit, MI; motor carrier; Hanover Ins. Co. D 6/29/81	Dec. 3, 1974	Dec. 3, 1974	Detroit, MI $50,000
Mistletoe Express Service of Texas, Inc., P.O. Box 9325, San Antonio, TX; motor carrier; Kansas City Fire & Marine Ins. Co.	June 29, 1981	July 13, 1981	Laredo, TX $50,000
Morton Chain Co., 4551 N.E. 6th Ave., Ft. Lauderdale, FL; motor carrier; The Ohio Casualty Ins. Co.	Apr. 24, 1981	June 29, 1981	Miami, FL $25,000
Neptune World Wide Moving, Inc., 55 Weyman Ave., New Rochelle, NY; motor carrier; Commercial Union Ins. Co. D 2/9/81	Feb. 27, 1975	Apr. 14, 1975	New York Seaport $50,000
Nielsen Freight Lines, 1272 Gossage Ave., Petaluma, CA; motor carrier; Mid-Century Ins. Co.	May 26, 1981	June 26, 1981	San Francisco, CA $25,000

See footnotes at end of table.

Name of principal and surety	Date of bond	Date of approval	Filed with district director/area director/amount
Parent Cartage Ltd., 520 Hill St., Windsor, Ontario, Canada; motor carrier; Old Republic Ins. Co. (PB 7/20/72) D 7/20/81 [4]	July 20, 1981	July 20, 1981	Detroit, MI $50,000
Ports International Inc., 3730 N W. 54th St., Miami, FL; motor carrier; Peerless Ins. Co.	May 11, 1981	June 30, 1981	Miami, FL $25,000
Sidney Truck & Storage, Inc., W. Campbell Rd., Sidney, OH; motor carrier; St. Paul Fire & Marine Ins. Co. D 7/14/81	Apr. 26, 1971	July 16, 1971	Cleveland, OH $25,000
CTD, Inc., dba: Statewide Haulers, Inc., 1800 Chicago, Laredo, TX; motor carrier; Royal Indemnity Co. (PB 7/14/80) D 7/6/81	June 24, 1981	July 6, 1981	Laredo, TX $25,000
Superior Express, 611 N. Mission Rd., P.O. Box 60100, Los Angeles, CA; motor carrier; St. Paul Fire & Marine Ins. Co.	Jan. 14, 1981	June 11, 1981	Los Angeles, CA $50,000
Texas Tex-Pack Express, Inc., P.O. Box 9325, San Antonio, TX; motor carrier; Hartford Accident & Indemnity Co. D 7/13/81	July 28, 1978	Aug. 10, 1978	Laredo, TX $50,000
Transportation Systems International Inc., 2500 Kennedy St., N.E., Minneapolis, MN; motor carrier; Great American Ins. Co.	Apr. 14, 1981	June 2, 1981	Minneapolis, MN $50,000
T. J. Trucking Inc., 425 Kennedy St., Oakland, CA; motor carrier; St. Paul Fire & Marine Ins. Co.	Feb. 1, 1981	June 26, 1981	San Francisco, CA $25,000

[1] Surety is National Bonding & Accident Ins. Co.
[2] Surety is Fidelity & Deposit Co. of MD.
[3] Principal is Gateway Transportation, Inc.; Surety is Hartford Accident & Indemnity Co.
[4] Surety is St. Paul Fire & Marine Ins. Co.

BON-3-03

MARILYN G. MORRISON,
Director,
Carriers, Drawback and Bonds Division.

---

19 CFR Part 148

(T.D. 81-218)

Personal Declarations and Exemptions

AGENCY: U.S. Customs Service, Department of the Treasury.

ACTION: Final rule.

SUMMARY: This document amends the Customs Regulations to provide that a crewmember will not be considered a returning resident qualifying for the personal exemptions from the payment of duties and taxes allowed under the Tariff Schedules of the United States, unless the crewmember permanently leaves the vessel, vehicle, or aircraft in which he arrived from a foreign port, without the intention of resuming employment on the same or any other carrier engaged in international traffic. The change will ensure uniform treatment of crewmembers nationwide, and conform the regulations with a headnote of the Tariff Schedules of the United States.

EFFECTIVE DATE: (30 days from the date of publication in the Federal Register).

FOR FURTHER INFORMATION CONTACT: Legal Aspects: James F. Bartley, Entry Procedures and Penalties Division, (202–566–5765). Operational Aspects: Dennis Hazelton, Inspection and Control Division, (202–566–5607), U.S. Customs Service, 1301 Constitution Avenue NW, Washington D.C. 20229.

SUPPLEMENTARY INFORMATION:

BACKGROUND

On October 24, 1980, a notice was published in the Federal Register (45 FR 70476) of a proposal to amend section 148.65, Customs Regulations (19 CFR 148.65), relating to the qualification of crewmembers for the personal exemptions from the payment of duties and taxes allowed under the Tariff Schedules of the United States (TSUS) (19 U.S.C. 1202). The personal exemptions from the payment of duty and taxes imposed on imported merchandise to which residents and nonresidents of the United States are entitled are set forth in Schedule 8, Part 2A, TSUS. Headnote 3 of Schedule 8, Part 2A, TSUS, provides that a person arriving on duty as an employee of a vessel, vehicle, or aircraft engaged in international traffic, or arriving from a trip during which he was so employed shall not be entitled to any of the personal exemptions other than those in item 814.00, TSUS, relating to articles for bona fide personal use which will be taken out of the United States, unless he is permanently leaving such employment without the intention of resuming it on the same or another carrier.

Under section 148.65(a), Customs Regulations (19 CFR 148.65(a)), a crewmember may qualify as a returning resident and be entitled to the exemptions allowed under Schedule 8, Part 2A, TSUS, in two situations. Section 148.65(a)(1) reflects the provisions of headnote 3, Schedule 8, Part 2A, TSUS, and provides that a crewmember may qualify as a returning resident if he permanently leaves the

carrier without the intention of resuming his employment on the same or another carrier engaged in international traffic. Under section 148.65(a)(2), a crewmember may also qualify as a returning resident if he remains on or transfers to a vessel which is to proceed to another port of the United States in a movement in which entry of the vessel will not be required.

Section 148.65(a)(2) apparently conflicts with the criteria set forth in headnote 3, of Schedule 8, Part 2A, TSUS, and Customs believes that the headnote must take precedence over the Customs Regulations. To resolve this discrepancy, Customs proposed to amend section 148.65(a) by including subparagraph (1) in the text of paragraph (a) and removing subparagraph (2).

As a conforming change, Customs proposed to remove the reference to subparagraphs (1) and (2) of section 148.65(a) from section 148.65 (b). The notice of October 24, 1980, erroneously stated that comments on the proposal were to have been submitted by November 23, 1980. By notice published in the Federal Register on November 26, 1980 (45 FR 78704), interested persons were advised that December 23, 1980, was the correct closing period to submit comments regarding the proposal.

DISCUSSION OF COMMENT

Only one comment was received in response to the notice of proposed rulemaking. The commenter expressed concern regarding the effect of removing section 148.65(a)(2), and requested clarification as to what personal duty exemption benefits, if any, would be lost to crewmembers by removal of the section.

Customs believes that the removal of section 148.65(a)(2) will ensure uniform treatment of crewmembers, and will not result in the loss of any personal duty exemption benefits to crewmembers to which they are legally entitled. Rather, it is anticipated that the removal of the section will prevent the bestowal of returning resident duty exemptions on those crewmembers who do not qualify for them.

In this regard, the treatment of crewmembers by Customs pursuant to section 148.65(a)(2) has not been uniform. For example, aircraft crewmembers returning to the United States as passengers on board commercial flights from a trip abroad on which they were employed as crewmembers (commonly referred to as "deadheading") frequently travel in civilian clothes and, in the ordinary course, are indistinguishable from other passengers on board. In some cases, "deadheading" crewmembers who did not permanently leave such employment and who did not remain on or transship to an aircraft which was to proceed to another port of the United States in a movement in which entry of

the aircraft was not required, were treated as passengers and granted returning resident duty exemptions pursuant to section 148.65(a)(2), to which they were not entitled. In these instances the "deadheading" crewmembers did not lose their status as crewmembers simply because they were not actively employed on the return flight to the United States.

The clear intent of headnote 3 of Schedule 8, Part 2A, TSUS, is to require that a crewmember permanently leave employment on a vessel, vehicle, or aircraft engaged in international traffic in order to qualify for returning resident duty exemptions. Because section 148.65(a)(2) conflicts with the headnote, and because the headnote takes precedence over the regulation, Customs believes that the removal of section 148.65(a)(2) will conform the regulations to the headnote and ensure uniform treatment of crewmembers.

In view of the above, Customs is amending section 148.65 as proposed.

EXECUTIVE ORDER 12291 AND REGULATORY FLEXIBILITY ACT

It has been determined that this amendment does not meet the criteria for a "major rule" as specified in section 1(b) of E.O. 12291. Accordingly, no regulatory impact analyses were required, and none have been prepared for this regulatory project.

In addition, the provisions of section 3 of the "Regulatory Flexibility Act" (5 U.S.C. 603, 604) are not applicable to the amendment because, as noted above, a notice document was published in the Federal Register before January 1, 1981, the effective date of the Act.

DRAFTING INFORMATION

The principal author of this document was Robert Joseph Pisani, Regulations and Information Division, Office of Regulations and Rulings, U.S. Customs Service. However, personnel from other Customs offices participated in its development.

AMENDMENT TO THE REGULATIONS

Section 148.65, Customs Regulations (19 CFR 148.65), is amended as set forth below.

GEORGE C. CORCORAN, Jr.,
Acting Commissioner of Customs.

Approved: July 24 1981.

JOHN P. SIMPSON,
Acting Assistant Secretary of the Treasury.

PART 148—PERSONAL DECLARATIONS AND EXEMPTIONS

Section 148.65, Customs Regulations (19 CFR 148.65), is amended to read as follows:

§ 148.65 EXEMPTION FOR RESIDENT CREWMEMBERS.

(a) *Status as returning resident.* A crewmember arriving in a vessel, vehicle, or aircraft from a foreign port who is a resident of the United States shall be considered a returning resident qualifying for the exemptions allowed under Schedule 8, Part 2A. Tariff Schedules of the United States (19 U.S.C. 1202), and Subpart D of this part if he permanently leaves the carrier without the intention of resuming his employment on the same or any other carrier that is engaged in international traffic.

(b) *Statement of declaration.* A resident crewmember who claims that articles declared by him are entitled to be passed free of duty and tax under the returning resident's exemption, shall include a legible statement on the declaration. Customs Form 5129, of the basis for his claim for entitlement to the resident's exemption.

(R.S. 251, as amended, sec. 624, 46 Stat. 759 (19 U.S.C. 66, 1624))

[Published in the Federal Register, August 24, 1981 (46 F.R. 42656)]

352-986 0 - 81 - 3

Customs Service Decisions

DEPARTMENT OF THE TREASURY,
OFFICE OF THE COMMISSIONER OF CUSTOMS,
Washington, D.C., August 13, 1981.

The following are decisions made by the United States Customs Service where the issues involved are of sufficient interest or importance to warrant publication in the Customs Bulletin.

DONALD W. LEWIS,
Director,
Office of Regulations and Rulings.

(C.S.D. 81-181)

Value: Use of a Trigger Price To Establish an Export Value Is a Correct Method of Appraisement Pursuant to Section 402(b), Tariff Act of 1930, as Amended

Date: January 13, 1981
File: CLA-2 RRUCV
065107 TLL

DISTRICT DIRECTOR OF CUSTOMS,
San Juan, Puerto Rico

DEAR SIR: This is in reply to Application for Further Review of San Juan Protest Nos. 4099-9-000015 and 4909-9-000016, which were timely filed.

Issue: Whether the use of a trigger price was a permissible method of establishing export value.

Facts: The instant protests cover certain steel plate exported from Belgium on March 2, 1978 and ordered on August 12, 1977. Information at New York discloses that Belgium was offering steel plate at the trigger price.

Protestant claims that the invoice value, less certain non-dutiable charges, represents statutory export value. Protestant was unable to submit any evidence supporting this claim. The merchandise covered by this protest is not on the final list, TD 54521.

Law and analysis: Section 402(b) of the Tariff Act of 1930, as amended, provides:

> (b) EXPORT VALUE—For the purposes of this section, the export value of imported merchandise shall be the price, at the

time of exportation to the United States of the merchandise undergoing appraisement, at which such or similar merchandise is freely sold or, in the absence of sales, offered for sale in the principal markets of the country of exportation, in the usual wholesale quantities and in the ordinary course of trade, for exportation to the United States, plus, when not included in such price the cost of all containers and coverings of whatever nature and other expenses incidental to placing the merchandise in condition packed ready for shipment to the United States.

Essentially, section 402(b) requires us to find either a "freely sold, or in the absence of sales, offered for sale" price in the principal markets of the country of exportation for exportation to the United States at the time of exportation. Thus to the extent merchandise subject to trigger pricing represents such a price, it is possible to find export value. Of course, whether or not export value would exist in a particular set of circumstances is a question of fact which must be determined on a case by case basis. On the basis of the facts established here, the trigger price figures used represent export value. The fact that the prices were for future delivery is no bar to the finding of export value. Therefore, you are directed to deny the protest.

Holding: Export value at the trigger price figure is the correct appraisement.

(C.S.D. 81-182)

Proper Tariff Classification of Wire "Cut to Length"

Date: February 11, 1981
File: CLA-2 CO:R:CV:G
065831 JLV

To: Chief, Duty Assessment Branch 1/11 New York Seaport.
From: Director, Classification & Value Division Headquarters.
Subject: Classification of wire cut to length.

In your memorandum of December 4, 1980, (Your file CLA-2-03-SCD-11-CST-18,437), you requested classification of Headquarters' position on the classification of cut wire in view of Section 20 of Public Law 96-467, October 17, 1980. Section 20 amended Headnote 3(i) to subpart B of part 2 of schedule 6, TSUS, by striking out "cut to length." The legislative history indicates that the primary purpose for the change was to ensure that certain small diameter cold finished steel bar would be classified as bar rather than as wire.

The issue is whether wire products cut to length, other than the small diameter cold finished steel bar, are now precluded from classification under the provisions for wire.

It is our opinion that the amended headnote language must control. The term "wire" is defined for tariff classification purposes in headnote 3(i) of subpart B, part 2, schedule 6, TSUS. The language is clear and should be applied as such. We note that the court in *Overton & Co.* v. *United States*, C.D. 4875 (1980), stated the statutory definitions for "bars" and "shapes" were determinative of the scope of the tariff provisions for such articles. The statutory provision for "wire" is similarly controlling.

The legislative history for section 20 of P.L. 96–467 indicates that the primary concern was to make certain that cold finished steel bars were classified under the provision for bars which carries a significantly higher rate of duty. On page S13661 of the Congressional Record, September 26, 1980, it was stated:

> * * * This provision would provide for a change in definition of steel wire so as to exclude the "cut to length" products, mainly of cold finished steel, from that definition.

It was also acknowledged in House Report No. 96–566 on H.R. 4309 (the original bill to change headnote 3(i)) that wire is usually shipped in coils whereas the small diameter cold finished steel bars are shipped cut to length.

It appears, therefore, that the Congress was aware that cut to length products other than steel bars would be affected. No attempt, however, was made to differentiate between these products. In view of this, we believe that wire, cut to length, is now precluded from classification as wire. Such wire would be classifiable under the appropriate provision for bar, or, if the wire does not fit the definition for bar, then it would be classifiable under the provision for angles, shapes, and sections.

The cut to length wire products would not be classifiable as either parts or as articles of metal unless it could be determined that they are processed to the degree that they are dedicated to the making of a specific article. *Avins Industrial Products Co.* v. *United States*, 62 C.C.P.A. 83, C.A.D. 11509(1975), is controlling on this issue.

(C.S.D. 81–183)

Classification: Protective Leather and Rubber Footwear

Date: February 13, 1981
File: CLA–2–07–S:C:D:6:60–14
800025

In a letter dated December 23, 1980, you inquired as to the dutiable status of three (3) styles of protective rubber bottomed, stitched

leather upper, footwear manufactured in Taiwan. Two (2) styles (#4446 and #4448) are below ankle height; in the remaining style (#476L), the laced leather upper extends above the ankle. Samples were submitted for examination.

You request the footwear classification rates that will apply to these prospective imports on and after July 1, 1981, as promulgated by Public Law 96–39; and, additionally, you request that the New York Regional Commissioner's classification determinations be in accordance with, and bound by, Customs Regulations Section 177.1(a), as amended by T.D. 80–285.

Style #4446 is a man's 3-eyelet tie oxford with a rubber/plastic molded bottom with a trimmed leather topline, variously extending down from the topline 1½ to 2½ inches, and stitched to the molded bottom. The unit molded bottom, which by itself virtually encloses the foot below the ankle, features a molded sole and ½ inch molded heel with a substantial calendered traction tread. This style is a modified version of the L.L. Bean Gum Shoe or the L.L. Bean Maine Hunting Shoe and is also variously known as a Foul Weather Shoe, Camp Shoe, Mud Moc and/or Rubber Duckie.

Style #4448 is a man's slip-on oxford with a rubber/plastic molded bottom and with a trimmed leather topline extending down from the topline one inch and stitched to the molded bottom. A single fabric lace is intertwined throughout the topline and tongue and serves as a tie closure. The unit molded bottom, which virtually encloses the foot below the ankle, features a molded sole and ½ inch molded heel with a substantial calendered traction tread. This style is also a modified version of the L.L. Bean Gum Shoe or the L.L. Bean Maine Hunting Shoe and is also variously known as a Foul Weather Shoe, Camp Shoe, Mud Moc and/or Rubber Duckie.

The Regional Commissioner at New York is of the opinion that styles #4446 and #4448 are classifiable under the provision for other footwear, which is over 50 percent by weight of rubber or plastics which is designed to be worn over, or in lieu of, other footwear as a protection against water or inclement weather and having soles and uppers of which not over 90 percent of the exterior surface area is rubber or plastics, in item 700.57, Tariff Schedules of the United States, and dutiable at the rate of 37.5 percent ad valorem. This classification and rate takes effect July 1, 1981.

Style #476L is a women's above-the-ankle 5-eyelet tie with a laced suede leather upper extending above the ankle and which is stitched to the molded bottom. The unit molded bottom, which virtually encloses the foot below the ankle, features a molded sole and ½ inch molded heel with a substantial calendered traction tread, polyurethane trim at the topline, and a suede leather pull-tab. This above-the-ankle

style is also variously known as a Foul Weather Shoe, Canadian Boot, and is a modified version of a women's L. L. Bean Maine Hunting Shoe. The importer states that the chief value of this shoe is the leather upper.

The Regional Commissioner at New York is of the opinion that providing the exterior surface area of the upper of women's style #476L is *over 50% leather* and the entire shoe is in *chief value of leather*, it is classifiable under the provision for other footwear of leather, for other persons in item 700.43 Tariff Schedules of the United States (TSUS), with duty at the rate of 15 percent ad valorem, if valued not over $2.50 per pair, or, in item 700.45, TSUS, with duty at the rate of 10 percent ad valorem, if valued over $2.50 per pair.

Further, the Regional Commissioner of Customs at New York is of the opinion that providing the exterior surface area of the upper of style #476L is *over 50% leather* and the entire shoe is in *chief value of rubber*, it is classifiable under the provision for other footwear, other, in item 700.95 Tariff Schedules of the United States (TSUS), with duty at the rate of 12½ percent ad valorem.

Lastly, if the exterior surface area of the upper in the women's style #476L is *50% or less of leather*, this shoe would be classifiable under the provision for other footwear, which is over 50 percent by weight of rubber or plastics which is designed to be worn over, or in lieu of, other footwear as a protection against water or inclement weather and having soles and uppers of which not over 90 percent of the exterior surface area is rubber or plastics, in item 700.57, Tariff Schedules of the United States, and dutiable at the rate of 37.5 percent ad valorem. These classifications and rates for style #476L will be those in effect on and after July 1, 1981.

These rulings are being issued under the provisions of Section 177.1(a) of the Customs Regulations (19 CFR 177.1).

(C.S.D. 81-184)

Classification: Covered Safety Pads Affixed to Various Bicycle Parts Are Properly Classified as Parts of Bicycles, Other, in Item 732.42, TSUS

Date: February 14, 1981
File: CLA-2:CO:R:CV
066193 MJ

Your letter of June 17, 1980, requested information on the classification of covered safety pads used on bicycles.

You assert that certain covered safety pads used on bicycles have been improperly classified under the provision for articles not specially

provided for, of rubber or plastics in item 774.55, Tariff Schedules of the United States (TSUS), dutiable at the rate of 8.5 percent ad valorem, and eligible for duty-free treatment under the Generalized System of Preferences (GSP).

The submitted samples are tubular closed cell butyl rubber of various lengths and normally at least one inch in diameter. The surface of the pads is somewhat slick and the pads are cut lengthwise so that they can be wrapped around various parts of the bicycle frame. A vinyl cover is then wrapped around the pad and secured by snap closures. The covered safety pads are designed to prevent injury to a bicycle rider by cushioning the handlebar, the handlebar stem, and the top bar of the frame of a bicycle. The safety pads are required equipment in moto-cross bicycle racing; approximately half are sold for general use.

General Headnote 10 (ij), TSUS, states that "a provision for "parts" of an article covers a product solely or chiefly used as a part of such article, but does not prevail over a specific provision for such part." An article is chiefly used on a bicycle if it falls with the class or kind of articles principally or predominantly used as parts of bicycles. See Sturm, *A Manual of Customs Law*, at 521. If an article is dedicated for use as a part, this is significant evidence that the article is chiefly used as a part. *Beacon Cycle and Supply Co., Inc.* v. *U.S.*, 81 Cust. Ct. 46, C.D. 4764 (1978), at 51. An article proposed as a part must also aid in the safe or efficient operation of the main article. An accessory can be a part if it satisfies the requirements of chief use and safe or efficient operation of the main article. *Victoria Distributor, Inc.* v. *U.S.*, 57 C.C.P.A. 76, C.A.D. 979 (1970).

The safety pads are dedicated to use as parts of bicycles. The slit down the side of the pad necessitates the use of the vinyl cover; this combination peculiarly adapts the entirety for use as a part of a bicycle. For example, the pads could not be effectively used as hand-grips, on bicycles or other objects, because of the slickness of their surface and because of the slits. Incidental or fugitive use also does not vitiate this conclusion. The safety pads also aid in the safe or efficient operation of a bicycle by diminishing a rider's risk of injury from a fall, a risk inherent in racing and in casual bicycling. The safety pads do not merely add a convenience, but aid directly in the safe operation of the main article itself.

Under the second clause of General Headnote 10(ij), set forth above, the safety pads, even though considered parts, might be classifiable under the provision for "Expanded, foamed, or sponge rubber or plastics, and articles not specially provided for, wholly or almost wholly, of such rubber or plastics," in item 770.80 TSUS. (The safety pads would fall under the second clause of this provision

because they are articles.) But a basket provision is not specific enough to prevail over a parts provision. *Ideal Toy Corp.* v. *U.S.*, 58 C.C.P.A. 9, C.A.D. 996 (1970). The safety pads are classifiable under the provision for parts of bicycles, other, in item 732.42, TSUS, dutiable at the rate of 15 percent ad valorem.

Products of beneficiary developing countries, including Taiwan, classifiable in item 732.42, TSUS, are *not* eligible for duty-free treatment under the Generalized System of Preferences (GSP). If the safety pads have been classified in item 774.55, TSUS, then they have been eligible for GSP if they were products of beneficiary developing countries. There has been no uniform and established practice for classification of the merchandise. This letter will be circulated to the various ports.

(C.S.D. 81-185)

Application of Coastwise Laws to Outer Continental Shelf Activity: The Use of a Foreign-Built Launch Barge in the Transportation of a Drilling Jacket

Date: February 26, 1981
File: VES-3-15 CO:R:CD:C
104983 JM
104880

This is in response to your letter of December 23, 1980, concerning use of a foreign-built launch barge, alone or in conjunction with a U.S. or foreign-built derrick barge, in the transportation of a drilling jacket to the Outer Continental Shelf of the United States.

You state that the launch barge and/or the derrick barge will deliver the drilling jacket to a point at which no buoy marker is submerged onto or attached to the Outer Continental Shelf and no well has been sunk into the seabed. While there may be buoys or wells in the general vicinity, the barge will not deliver the drilling jacket to any of these sites. You ask whether title 46, U.S. Code, sections 289 and 883, would prohibit this activity.

Title 46, U.S. Code, section 289, provides that no foreign-flag vessel shall transport passengers between points in the United States. Section 883 of title 46 provides, in pertinent part, that "no merchandise shall be transported . . . between points in the United States, including Districts, Territories and possessions thereof embraced within the coastwise laws, either directly or via a foreign port, or for any part of the transportation, in any other vessel than a vessel built in and documented under the laws of the United States".

The provisions of section 4(a) of the Outer Continental Shelf Lands Act, as amended (43 U.S.C. 1333(a), extend the Constitution and laws and civil and political jurisdiction of the United States to "the subsoil and seabed of the Outer Continental Shelf and to all

artificial islands, and all installations and other devices permanently or temporarily attached to the seabed, which may be erected thereon for the purpose of exploring for, developing, or producing resources therefrom . . ."

Because the drilling jacket would be delivered to a point on the Outer Continental Shelf where no device or structure has been attached or erected, there would be no violation of the coastwise laws in the transportation of the drilling jacket by a foreign-built launch barge, alone or in conjunction with a U.S. or foreign-built derrick barge, to the Outer Continental Shelf.

You therefore are correct in your interpretation that our ruling 104880 (circulated as Legal Determination 81–0010) should not be read to state otherwise.

(C.S.D. 81–186)

Classification: Sewing Machines, Telephone Switching Equipment, Emergency Generators, Air Conditioning Equipment and Transformers Are Not Assists Under Computed Value, TAA

Date: February 27, 1981
File: CLA–2 CO:R:CV:V
542302 BS
TAA #18

This is in reference to your letter dated December 1, 1980, in which you requested a ruling under Part 177, Customs Regulations, with regard to a prospective transaction. The facts of the transaction are as follows:

Company A is setting up an off-shore Company ("B") to perform an 807 assembly operation. Company A will supply to Company B the following equipment at no cost: Sewing machines, air conditioning equipment, power transformer, telephone switching equipment, and emergency generator. You advise that Company A uses a generally accepted accounting system and will depreciate the equipment over generally recognized periods.

Based on Headquarter's rulings, it is your opinion that the sewing machines are dutiable assists under section 402(1)(A)(ii), Tariff Act of 1930, as amended by the Trade Agreements Act of 1979 (TAA). On the other hand, you believe that the remaining equipment would not be considered dutiable assists, nor would their value be includable under any other provision in determining transaction value or computed value.

It is also your opinion that the value of the sewing machines to be includable as an assist would be the depreciated cost taken on the books of the importer at the end of each fiscal year. Thus, e.g., if it is

352-986 O - 81 - 4

reasonable to depreciate sewing machines over a 7-year period, and the value of the machines was $7,000, the maximum apportioned value of the assist that would have to be declared to Customs during each year would be $1,000.

Section 402(h)(1)(A) provides as follows:

> (1)(a) the term assist means any of the following if supplied directly or indirectly, and free of charge or at reduced cost, by the buyer of imported merchandise for use in connection with the production or the sale for export to the United States of the merchandise:
>
> (i) Materials, components, parts and similar items incorporated in the imported merchandise.
>
> (ii) Tools, dyes, molds and similar items used in the production of the merchandise.
>
> (iii) Merchandise consumed in the production of the imported merchandise.
>
> (iv) Engineering, development, artwork, design work, plans and sketches that are undertaken elsewhere than in the United States and are necessary for the production of the imported merchandise * * *.

In TAA # 4, dated September 4, 1980 (copy enclosed), we held that general purpose equipment, such as sewing machines, ovens, drill presses, etc., furnished free of charge or at a reduced cost used abroad in the production of merchandise imported into the United States, is dutiable under section 402(h)(1)(A)(ii). Thus, the sewing machines furnished by Company A fall within this provision.

However, since the other items (telephone switching equipment, emergency generator, air conditioning equipment, power transformer) are not used in the production of the merchandise, they cannot be considered assists within the meainng of section 402(h)(1)(A)(ii).

Nor do such items fall within any of the other assist categories. We note in this regard that these categories are intended to be inclusive and, accordingly, items not included therein are not considered assists.

The definition for an assist under transaction value is the same when determining computed value, and accordingly, these items are similarly treated. Futhermore, we agree that these items do not fall within any of the additions to the price paid or payable in determining transaction value, nor can they be considered as any of the elements in determining computed value.

One of the basic concepts inherent in the TAA is the use for appraisement purposes of the importer's or supplier's accounting method if such method is in accordance with generally accepted accounting principles. In the "Statement of Administrative Action" the draftsmen stated, with respect to assists:

> Once a value has been determined for the assist * * * it is necessary to apportion that value to the imported merchandise.

> The apportionment of these elements will be made in a reasonable manner appropriate to the circumstances and in accordance with generally accepted accounting principles. The method of apportionment used will depend on the details in the documentation by the importer to substantiate his requested method * * * If the anticipated production using the assist is only partially destined for the United States, or if the assist is used in several countries, the method of apportionment to be used will depend upon the documentation provided by the importer to substantiate the requested method * * *.

In your example, if it is in accordance with generally accepted accounting principles to depreciate the sewing machine over a 7-year period, and the value of the machines is $7,000, Company A's books would reflect a depreciated cost per year of $1,000. This is the amount which would be attributed on an annual basis to the imported merchandise.

Under the circumstances, we hold that where general purpose machinery is includable in transaction value or computed value as an assist, it may be apportioned for Customs valuation purposes on a yearly basis at the depreciation cost reflected on the books of the related domestic importer, assuming the depreciation is determined in accordance with generally accepted accounting principles. Further, air-conditioning equipment, a power transformer, telephone switching equipment and emergency generators do not fall within the definition of assist, as they are not used in the production of the merchandise. Accordingly, unless they are carried on the books of the foreign producer, their cost or value may not be apportioned to the merchandise, and is not includable in transaction value or computed value.

(C.S.D. 81-187)

Classification: Tariff Classification of Oversized Steel Slabs Which Do Not Conform to the Dimensional Requirements Defined in Headnote 3(c), Subpt. B, Pt. 2, Sch. 6, TSUS

Date: March 2, 1981.
File: CLA-2:CO:R:CV:G
065881 LJE

AREA DIRECTOR OF CUSTOMS,
New York, New York

Re Classification of oversized steel slabs or slabs which do not meet the dimensional requirements of the meaning of slabs in Headnote 3(c), Subpart B, Part 2, Schedule 6, TSUS, I/A 233/80.

DEAR SIR: In your memorandum of December 4, 1980 (your file CLA-2-06-SCD-11-CST-18), you requested advise on the above issue as a result of numerous phone calls from other ports and the im-

porting public concerning the lack of a definite ruling for purposes of uniform classification. You point out that several ports have expressed opinions that the subject merchandise should be classified as either ingots, or bars, or plates, or angles, shapes, and sections, all of which are defined in Schedule 6, Part 2, Subpart B.

You discussed the proposed classifications and pointed out that the subject slabs are not within the meaning of ingots because ingots are defined as castings, and these slabs are a hot rolled product. You eliminate the classification of angles, shapes, and sections on the basis that the subject slabs have a cross section in the shape of a rectangle and therefore would be within the meaning of the term bars which are specifically excluded from the meaning of angles, shapes, and sections.

Information received is that much of the production of steel slabs today does not fall within the dimensional requirements for slabs in Headnote 3(c) because they are oversized. You report that a preponderance of oversized slabs produced today meet the wording of the plate definition in Headnote 3(g) as flat rolled products, 0.1875 inch or more in thickness and over 8 inches in width. They do not, however, meet the commercial meaning of plates. You believe, therefore, that the oversized slabs should be classified as bars.

The issue presented is whether the meanings set forth in the headnotes or the commercial meanings shall control.

In *Overton and Co.* v. *United States*, C.D. 4875, decided September 23, 1980, the court in rendering its decision involving an issue between "bars" and "shapes" stated that where the terms have been statutorily defined, such statutory definitions are determinative.

The court then proceeded to address the issue of whether the merchandise fell within the definition of "bars" in Headnote 3(d), and stated that if the subject merchandise was encompassed by that definition, its classification as "shapes" would be precluded by the definition of "angles, shapes, and sections" in Headnote 3(j), which excludes "bars". Guided by the principle of this decision, the statutory definitions of "plate" and "bar" are determinative. Further, since the definition of "bars" in Headnote 3(d) specifically excludes "plates", it is first necessary to address the issue as to whether the oversized slabs are plates within the meaning of Headnote 3(g). See also I.A. 32–76, suppl. 1, 052649.

Applying the reasoning of OVERTON to the situation before us, those oversized slabs which meet the meaning of the term "plates" in Headnote 3(g), must be classified as plates.

We are informally bringing the outdated meaning of the term "slabs" to the attention of the International Trade Commission.

(C.S.D. 81-188)

Vessels: Whether Costs Incurred for the Cleaning of a Vessel's Tanks Are Dutiable Under the Vessel Repair Statute

Date: March 6, 1981
File: VES 13-18
CO:R:CD:C
104938 JL

This ruling concerns the dutiability under 19 U.S.C. 1466 of certain cleaning costs incurred by an American-flag vessel.

Issue: Are costs incurred for the cleaning of a vessel's tanks preparatory to repairs dutiable under the vessel repair statute?

Facts: An American-flag vessel was drydocked in Japan for extensive repairs, including work on its cargo tanks. A charge was made for the cleaning of the vessel's cargo tanks and the removal of slops (cargo residue) and dirty water. The owner claims that the charges, being for tank cleaning, are non-dutiable. The Regional Commissioner proposed to liquidate the charges as dutiable as cleaning preparatory to dutiable repairs.

Law and annalysis: The vessel repair statute, 19 U.S.C. 1466, provides for a 50% ad valorem duty on the cost of foreign repairs to American-flag vessels.

CIE 196/60 held that cleaning operations in cargo areas to protect cargo to be carried in the future are not dutiable repairs.

CIE 820/60 held that the cleaning of cargo tanks in preparation for dutiable painting is dutiable as part of the painting.

CIE 1203/60 held that the application of a coating to cargo tanks is analogous to dutiable painting.

An analysis of repair invoices discloses that the vessel underwent extensive repairs in drydock, including having its cargo tanks washed and coated. We note that ten other dutiable repairs to the cargo tanks were involved. It is our opinion that the cargo tanks were cleaned in preparation for, and the charges are dutiable as part of, dutiable repairs.

However, the removal of the slops is a cleaning procedure undertaken to prepare the vessel to receive future cargo, which cost is not dutiable pursuant to the holding in CIE 196/60. Customs has consistently held that where charges for non-dutiable items are not segregated on an invoice, the entire invoice will be liquidated as dutiable. Therefore, unless the petitioner is able to furnish a corrected invoice from the ship-yard which segregates the charges, the entire invoice should be liquidated as dutiable.

Holding: The charges for the cleaning of cargo tanks of an American-

flag vessel in a foreign drydock are dutiable under 19 U.S.C. 1466 when dutiable repairs on the tanks are made following the cleaning. The cost of removing slops, however, is a non-dutiable cost of preparing the vessel to receive future cargo.

(C.S.D. 81-189)

Classification: Proper Tariff Classification of Artificial or Synthetic Surface Ice-Skating Rinks Which Are Also Adaptable to Other Athletic and Recreational Uses

Date: March 9, 1981
File: CLA-2 CO:R:CV:G
061999 LCS
065087 LCS
064525 LCS
064798 LCS

This ruling concerns the Customs classification of artificial/synthetic surface ice-skating rinks, suitable also for other athletic/recreational uses.

Facts: Two separate artificial/synthetic surface ice-skating rinks, one marketed under the trade name "NEWICE" (a product of Belgium) and the other under the registered trade name "GLICE" (a product of Canada), have been presented for classification. Both systems permit the use of traditional-type blade ice skates for figure and recreational skating and hockey.

The former consists of standard panels, each measuring 4 feet by 3 feet in surface area and consisting of a notched plywood core, approximately .75 of an inch in thickness, bonded on each face with a 14-millimeter thickness of high-density polyethylene, both of which are capable of use for skating or other uses. The notched plywood core accommodates a plastic assembly "tongue" which serves to secure the panels one to another. The complete system includes, as well as the panels and assembly "tongues," an underlayment mattress of fiber material, approximately .50 of an inch in thickness, a rubber cushioning material, steel holding guard rails with related hardware, and a liquid coating/lubricating material. In assembly, the underlayment mattress, which compensates for any uneveness of the subsurface, either indoor or outdoor, is positioned and the panels assembled by use of the tongues; the surface is then girded by the rubber cushioning and the steel holding guard rails, after which the liquid lubricant is applied. Normal usage is stated to require reapplication of the lubricant on a 7 to 10 day cycle. However, nonreapplication at the end of a cycle enables use of the surface for nonskating athletic/recreational activities (*e.g.*, basketball, dancing, etc.)

The entire system is assumed to be in chief value of plastics material.

No breakdown by cost or value of the components was provided and no description of the constituent ingredients of the conditioner/lubricant was stated.

The latter of the two specific systems under consideration, "GLICE," consists of: (1) panels, measuring 600 by 800 (assumed to be stated in millimeters), similar to "NEWICE," compromised of a notched core (assumed to be of laminated wood) bonded on each face with a plastics material surface (both of which are capable of use for skating or other uses); (2) plastic assembly rods; (3) a resilient interpolated mattress, such as "Phaltex Isor...," measuring 1.0 to 1.5 centimeters in thickness; (4) a rigid hardwood perimeter frame; and (5) "GLICE" conditioner, a liquid lubricant to reduce friction between the surface and the skate blades.

The assembly procedure is essentially the same as for the "NEWICE" system; however, the conditioner application cycle for the "GLICE" system is stated to recur biweekly.

The entire system is stated to be in chief value of plastics materials. No breakdown by component or value was provided.

Both systems stress the energy conservation, cost (both initial and upkeep), maintenance, multiple-use, and other advantages over regular ice rink systems.

Issue: Whether artificial/synthetic surface ice-skating rinks are classifiable as entireties or separately by individual component; and if an entirety, whether as: (1) ice-hockey equipment; (2) other game, sport, gymnastic, athletic, or playground equipment, and parts thereof, not specially provided for; (3) according to component material in chief value; or otherwise (item Nos. 734.80 and 735.20, Tariff Schedules of the United States (TSUS), noted in particular).

Law and analysis: The resolution of the issue of whether these systems constitute entireties for tariff classification purposes presupposes that the entry or withdrawal from warehouse for consumption of the merchandise which is the subject of the particular entry comprises a substantially complete unit (*i.e.*, one complete ice-skating rink, one-complete ice-hockey rink). In such circumstances, it is well settled that the " * * * separate entities, which by their nature are obviously intended to be used as a unit, * * * [and] to be joined together by mere assembly, and [,] in such use * * * [and] joining [,] the individual identities of the separate entities are subordinated to the identity of the combined entity, * * * [the doctrine of entireties applies and] duty will be imposed upon the entity they represent." *Donalds Ltd., Inc.* v. *United States*, 32 Cust. Ct. 310, C.D. 1619 (1954).

Accordingly, based on the assumption that the substantially complete entity is entered (*i.e.*, arrives at the U.S. port in one conveyance or on the same day, if shipped in more than one conveyance) or, if not arriving as such, is withdrawn from warehouse, both for consump-

tion, the entity (*i.e.*, the subject system) will be treated as an entirety for tariff classification purposes.

In the absence of persuasive evidence that such complete systems are to be chiefly used (or exclusively used) as ice-hockey rinks, the available evidence indicates they are intended primarily for recreational skating and secondarily for other recreational athletic or sports activities. Therefore, complete artificial/synthetic surface ice-skating rinks, capable of and marketed for other nonskating uses, are most properly classifiable under the provision for other game, sport, gymnastic, athletic, or playground equipment, and parts thereof, not specially provided for, in item No. 735.20, TSUS, dutiable as a product of either Canada or Belgium at the reduced column 1 rate of duty of 9 percent ad valorem. C.I.E. 673/66, February 15, 1966, T.D. 56545(15), C.D. 492.23P, October 1, 1965, involving a complete indoor track system, and C.I.E. 2003/66, September 2, 1966, T.D. 66–169(36), T.C. 492.21 I, July 20, 1966, involving matting for cricket games, noted and followed.

Holding: Artificial/synthetic surface ice-skating rinks, consisting of underlayment, plastic surfaced panels, assembly tongues, supporting and/or framing rails, etc., together with the surface conditioner lubricant, imported either as complete units, are classifiable, in the absence of persuasive evidence of a more-restrictive chief or exclusive use as ice-hockey rinks, under the provision for other-game, sport, gymnastic, athletic, or playground equipment, and parts thereof, not specially provided for, in item No. 735.20, TSUS.

Effect on prior rulings: CLA–2:R:CV:MC HL, 053281, November 28, 1977, is hereby overruled. Additionally, insofar as the result herein and the two C.I.E.'s cited as precedent cannot be distinguished from the result in the following two rulings, they are overruled; however, it is believed that these synthetic surfaces are not necessarily chiefly used for recreational purposes even though specific importations may be intended for such use:

(1) R:CV:MA DB, 413.44, 030503, February 7, 1974; and

(2) ORR Ruling 730048, June 12, 1973, R:CV:MA 418.44.F, March 8, 1973.

(C.S.D. 81–190)

Drawback: The Applicability of Drawback Specifications (19 U.S.C. 1313(c)) to Imported Whiskey Claimed To Be 7 or 9 Years Old Rather Than 6 Years Old

Date: March 10, 1981
File: DRA–1–CO:R:CD:D 211730 NK

REGIONAL COMMISSIONER OF CUSTOMS,
Baltimore, Maryland.

Re Request for futher review of protests numbered 1101–9–000171 through 1101–9–000176

DEAR SIR: The following is in reply to your request for futher review of the above-referenced protests.

Issue: Whether a mere claim that imported whiskey was 7 or 9 years old rather than 6 years old is sufficient to prove that the imported merchandise did not conform to specifications for drawback under 19 U.S.C. 1313(c).

Facts: Duty-paid bulk Canadian whiskey was withdrawn from storage of a bonded internal revenue distilled spirits plant and returned to Canada.

Drawback entries were filed for a refund of duties under section 1313(c), title 19, United States Code, claiming that the whiskey did not conform to sample or specifications. The documentation submitted with each entry indicated that the whiskey was imported for bottling because of a strike at the Canadian facility and since the strike had ended, it was required to return the bulk whiskey to Canada.

Since no further documentation was submitted to support the claims that the merchandise imported did not conform to sample or specifications, drawback was disallowed and protests were filed.

The protestant submitted Canadian Customs and Excise documents that show that the whiskey sent to the United States was 6 year old whiskey. The protestant also submitted bottle labels containing a statement that "This Whiskey Is 6 Years Old."

The protestant implies or claims that the whiskey did not conform to specifications because Canadian Customs papers specified 6 year old whiskey whereas the shipments contained 7 and 9 year old whiskey.

Further, the protestant claims that the imported whiskey remained continuously in bond prior to exportation and section 1557(a) title 19, United States Code, mandates a refund of duties paid upon exportation.

Law and analysis: Section 1313(c), title 19, United States Code, in compliance with applicable regulations, provides for a refund of 99 percent of duty paid on imported merchandise upon exportation within certain time limitations when the merchandise does not conform to sample or specifications.

Section 22.32(b) of the Customs Regulations requires that if the goods are claimed to be not in accordance with sample or specifications (as it is claimed in this case), the drawback entry shall be accompanied by a copy of the order for the merchandise, copies of any preliminary correspondence, and the samples or specifications on which the merchandise was ordered, together with a certificate of the actual owner that the sample or specifications submitted are those on which the merchandise was ordered, showing in detail in

352-986 O - 81 - 5

what manner the merchandise does not conform to sample or specifications. The regulations also provide that if no written order was placed and no sample or specifications are available, a certificate of the actual owner setting forth the specifications of his order and the method by which they were communicated to the seller may be accepted.

The protestant did not comply with the requirements of section 22.32(b). The documents filed with the entries indicated that the merchandise was returned to Canada because a strike at the Canadian facility had ended. The claims that the merchandise did not conform to sample or specifications were not substantiated and drawback was properly disallowed.

Nor are we satisfied that the documents submitted with the protests substantiate claims that the merchandise did not conform to sample or specifications. No information was submitted with the protests to show what the foreign shipper intended to send to the United States or what the consignee intended to receive. No information was submitted to show the intended transactions between the shipper and the consignee. The protestant did not submit information to show that 7 or 9 year old whiskey was not acceptable to meet specifications for 6 year old whiskey. In the absence of such information, we must conclude that the merchandise was returned as stated in the documents filed with the entries, because a strike at the Canadian facility had ended.

Section 1557(a), title 19, United States Code, concerns merchandise entered for warehousing in a Customs bonded warehouse. Upon importation the merchandise in question was placed in a distilled spirits plant bonded under the Internal Revenue Code. Since the merchandise was not entered for warehousing in a Customs bonded warehouse, section 1557(a) is not applicable.

Holding: The mere claim that imported whiskey was 7 or 9 years old rather than 6 years old is not sufficient to prove that the imported merchandise did not conform to specifications.

You are directed to deny the protests in full. Your file is returned herewith.

United States Court of International Trade

One Federal Plaza
New York, N.Y. 10007

Chief Judge

Edward D. Re

Judges

Paul P. Rao
Morgan Ford
Scovel Richardson
Frederick Landis
James L. Watson
Herbert N. Maletz
Bernard Newman
Nils A. Boe

Senior Judge

Samuel M. Rosenstein

Clerk

Joseph E. Lombardi

Decisions of the United States Court of International Trade

(Slip Op. 81-69)

ARMCO, INC. AND CF&I STEEL CORPORATION, PLAINTIFFS *v.* UNITED STATES, DEFENDANT, AH JU STEEL CO., LTD., ET AL., INTERVENORS

Court No. 80-9-01435

MOTION TO DISQUALIFY COUNSEL

1. DISQUALIFYING FORMER GOVERNMENT ATTORNEY

If a former representation by a government attorney is "substantially related" to a current private representation in which he is participating, and if there is reasonable probability that the

privileged information available to said attorney in his former position might be disclosed to associates he is disqualified; although, substantial relationship between two representations is itself sufficient to disqualify him.

2. FIRM DISQUALIFICATION—SCREENING

When an attorney is found to be disqualified on the basis of prior adverse representation, and he was not screened from participating in a current proceeding that is substantially related to his earlier representation the attorney's firm is also disqualified from participation.

[Motion to disqualify counsel granted.]

(Dated August 4, 1981)

Freeman, Meade, Wasserman and Schneider (*James M. Brachman* and *Beth Ring* at the oral argument and *Jack Gumpert Wasserman* and *Beth Ring* on the briefs) for the plaintiffs.

Daniels, Houlihan & Palmeter (*N. David Palmeter* and *Martin J. Lewin* at the oral argument and on the briefs) for the intervenors.

Rivkin, Sherman & Levy (*Saul Sherman* at the oral argument) for Daniels, Houlihan & Palmeter.

RICHARDSON, *Judge:* This is a contested motion by plaintiffs, Armco, Inc. and CF&I Steel Corporation, for an order disqualifying the attorneys for intervenors, Ah Ju Steel Co., Ltd., et al, of Korea, from representing their clients in this action, which challenges the United States International Trade Commission's (ITC) negative determination of injury in an antidumping proceeding [steel nails from Korea].

On April 13, 1979, the Department of Treasury commenced an antidumping proceeding against certain steel wire nails from Korea pursuant to the Treasury Department's authority under the "trigger price mechanism". Under the then applicable antidumping statute the Treasury Department on April 17, 1979, advised the ITC that it had substantial doubt that an industry in the United States was being or is likely to be injured by reason of the importation into the United States of allegedly dumped merchandise. In transmitting this matter to the ITC, the Treasury Department stated: "Some of the information involved in this case is regarded by Treasury to be of a confidential nature. It is therefore requested that the Commission consider all the information provided for its investigation to be for the official use of the ITC only, not to be disclosed to others without prior clearance from the Treasury Department." [1]

On April 20, 1979, the ITC commenced an investigation to determine whether there was a "reasonable indication" that an industry in

[1] 44 Fed. Reg. 24649 (1979).

the United States was being or is likely to be injured by reason of the importation of the steel wire nails. On May 4, 1979, at a public hearing held by the ITC in this investigation, N. David Palmeter, a member of the firm of Daniels, Houlihan & Palmeter (Daniels' firm) appeared and testified on behalf of intervenors in this action.

Martin J. Lewin, an attorney presently with the Daniels firm is participating in this litigation. Lewin was employed by the ITC as a staff legal assistant from December 11, 1978, to January 11, 1979, when he became an Attorney Adviser to Commissioner Paula Stern, an economist, and continued such employment until June 1, 1979, when he joined the Daniels firm. He stated that while he was Attorney Adviser to Commissioner Stern during the preliminary investigation, he sent resumes to several Washington, D.C. law firms active in the trade area, and on May 9, 1979, he was interviewed at the Daniels firm, which was his first contact with the firm apart from his scheduling the interview.

May 10, 1979, according to Lewin's affidavit, he received an offer from said firm which he immediately accepted. On the same day he informed the Commissioner and it was agreed he should not assist her or otherwise participate in any aspect of any matter before the ITC in which the Daniels law firm was involved. He said that "To the best of my recollection, my involvement in the inquiry consisted of a brief review of some initial material available to the ITC prior to the ITC's public hearing * * *. I have no specific recollection of the contents of the material reviewed." Lewin also stated that "I had no further involvement whatsoever with the inquiry and did not discuss any aspect of the matter with the Commissioner, her staff or any member or employee of the ITC."

May, 17, 1979, the ITC unanimously determined that there was a "reasonable indication" of injury or likelihood of injury to a domestic industry by reason of the importation of certain wire nails from Korea.

May 19, 1980, the Department of Commerce determined that certain wire nails from Korea were being sold in the United States at less than fair value within the meaning of section 731 of the Tariff Act of 1930 (19 U.S.C. 1673).

July 23, 1980 the ITC in a 3 to 2 decision made a Final Determination that there was neither material injury nor threat of material injury to American industry resulting from the importation of Korean nails. Plaintiffs appealed said Final Determination to this Court.

February 27, 1981, Martin A. Lewin, on behalf of the Daniels firm, counsel to Korean nail intervenors, signed and filed with this court, a motion for access to confidential documents in the investigation which led to the Final Determination under review by this court, under a protective order. Lewin's signing and filing of this

motion in this litigation, prompted plaintiffs' to move for Lewin's disqualification, in view of his prior employment as Attorney Adviser by Commissioner Stern of the ITC, where he had access to confidential information in the preliminary investigation. Plaintiffs also seek the disqualification of the Daniels firm, which through its member, N. David Palmeter, the lead attorney, represented the intervenors in the preliminary investigation, the investigation leading to the Final Determination and is appearing here with Lewin.

The nature of Lewin's position as Attorney Adviser to Commissioner Paula Stern when the preliminary inquiry was in progress, was such that confidential information ordinarily would have been communicated to him.

Lewin in an affidavit and in testimony at the oral argument on the motion to disqualify, stated that he had not at anytime during his employment with the Daniels firm, or prior thereto, "discussed the substance of the inquiry" or any confidential information he had received about the Korean nails while at the ITC, with anyone in the firm. (R. 39)

Lewin, did not deny that he had access to confidential documents. He admits having read certain documents, but says he has "no specific recollection of the contents of the material reviewed" during the preliminary investigation, prior to the ITC's public hearing.

Lewin's counsel stated, at the oral argument, that after Lewin's conference with Commissioner Stern, May 10, 1979, she took him off of the case, and that Lewin left the Commission before it made the investigation for its final determination.

The matters involved in the present litigation (a review of the Final Determination of the ITC), are substantially related to the matters involved in the preliminary investigation when Lewin was an Attorney Adviser to Commissioner Stern. There could be no final determination without a preliminary inquiry to determine if there was "A Reasonable Indication of Injury."

The subject matter, certain steel wire nails from the Republic of Korea, in the preliminary inquiry was the same as in the investigation for the final determination. A reading of excerpts from the two proceedings in 1979 and 1980 clearly reveal the connection:

1. A reading of "Determination of A Reasonable Indication of Injury" in Inquiry No. AA 1921–Inq. –26, at page A–4:

> The products included within the scope of this investigation are brads, nails, spikes, staples, and tacks of one-piece construction which are made of round steel wire and which are (1) less than 1 inch in length and less than 0.065 inch in diameter or (2) 1 inch or more in length, and 0.065 inch or more in diameter, and made of round steel wire, as provided for in items 646.25 and 646.26, respectively, of the TSUS.

2. The Determination of the Commission in Investigation No. 731–TA–26 (Final) under the Tariff Act of 1930, together with the information obtained in the investigation lists the same merchandise, at page 5:

> The Department of Commerce determination of less-than-fair-value sales covers those articles entering the United States under items 646.25 and 646.26 of the Tariff Schedules of the United States (TSUS), which includes brads, nails, spikes, staples, and tacks of one-piece construction, made of round steel wire. TSUS 646.25 provides for these articles which are under 1-inch in length and less than 0.065 inches in diameter. Item 646.26 provides for these articles which are 1-inch or more in length and 0.065 inches or more in diameter.

Also, the Preliminary Determination is referred to at page 13 of the Final Determination where it states:

"In the unanimous preliminary determination *in this case*, the Commission found a "reasonable indication of injury." (Emphasis added). Footnote two which follows this statement gives the precise citation to the preliminary investigation.

19 U.S.C. § 1516a, which provides for Judicial review in countervailing duty and antidumping duty proceedings, in subparagraph (b)(2) Record for Review, requires that the preliminary investigation be included in the file submitted to the court.

Thus the two investigations—the one when Lewin was with the ITC and the one when Lewin was with the Daniels firm, but in which he states he did not participate—are inextricably linked together as a part of this case, and must be considered by this court in deciding the issue of attorney disqualification.

Plaintiffs motion to disqualify Lewin asserts Lewin's representation is in direct contravention of the American Bar Association's Code of Professional Responsibility, Canon 9, and Disciplinary Rules 9–101(B).

Canon 9 states that:

> A lawyer should avoid even the appearance of professional impropriety.

Disciplinary Rule 9–101(b) states that:

> A lawyer shall not accept private employment in a matter in which he had substantial responsibility while he was a public employee.

The decisions on some motions to disqualify give great weight to the "appearance of impropriety". *General Motors Corporation* v. *City of New York*, 501 F. 2d, 639 (2nd Cir. 1974) in which Irving R. Kaufman, Chief Judge, held that an attorney hired to represent the City of New York in a matter in which said attorney had substantial responsibility while a public employee with the Department of Justice in an antitrust action, gave the appearance of professional

impropriety under Canon 9, which would have to be avoided through the disqualification of the attorney. Chief Judge Kaufman stated further at page 648 that: "Providing a measure of specificity to this general caveat, DR9-101(B) commands:"

> A lawyer shall not accept private employment in a matter in which he had substantial responsibility while he was a public employee.

Kaufman, *supra*, in 70 Harv. L. Rev. at 664 wrote that:

> If there was a likelihood that information *pertaining* to the pending matter reached the attorney, although he did not "investigate" or "pass upon" it, * * * there would undoubtedly be an appearance of evil if he were not disqualified. (Emphasis added).

The District Court judge who reached a different result was reversed.

Five years later Jack B. Weinstein, District Judge of the Second Circuit, took the position that "The possibility of an attorney's representation in a given case may give rise to an 'appearance of impropriety' is not enough to disqualify." *Society For Good Will To Retarded, Etc.* v. *Carey*, 466 F. Supp. 722, at 724 (1979). The Judge cited *Board of Education of the City of New York* v. *Nyquist*, 590 F. 2d 1241, 1247, (2nd Cir. 1929) where the Court of Appeals receded from its earlier emphasis on the appearance of impropriety as the standard in favor of the taint of trail as the standard. It stated that where "there is no claim that the trial will be tainted, appearance of impropriety is simply a slender reed on which to rest a disqualification order in the rarest cases."

The same Court of Appeals sitting en banc in the case of *Michael F. Armstrong* v. *McAlpin*, 625 F. 2d 433 (1980) *Petition for Cert. Pending*, adhered to its standard that the test is whether the trial would be tainted if a counsel complained against were not disqualified.

The Court does not have to rely on the appearance of impropriety alone in this case to disqualify Lewin. Lewin had substantial responsibility over the subject matter of this litigation, Korean wire nails, while a government employee as attorney adviser to Commissioner Stern. He admitted that he had access to confidential documents in the matter during the preliminary investigation. It has been shown above that the matters embraced within this case were substantially related to matters before the ITC when Lewin was Attorney Adviser to one of the commissioners. The plaintiff does not need to show more. See: Edward Weinfeld, District Judge in *T. C. Theatre Corp.* v. *Warner Bros. Pictures*, 113 F. Supp. 365 at 268 (1953). The Court holds that Lewin is disqualified from participating in this litigation by virtue of his having received privileged information as a government employee with the ITC which was unavailable to plaintiffs.

Since Lewin is disqualified in this case the question of whether

his disability to continue is imputed to the Daniels firm must be addressed.

The American Bar Association Disciplinary Rule 5–105(D) extends every disqualification of a lawyer to all affiliated lawyers in his firm. When this rule is considered in connection with Disciplinary Rule 9–101(B) which prohibits a former government lawyer from accepting "private employment in a matter in which he had substantial responsibility while he was a public employee," the disqualification of an entire law firm is required. To mitigate some of the harsh effects of this Rule, the American Bar Association Ethics Committee issued formal opinion number 342 which permits a law firm to continue in a case where the disqualified member of the firm has been screened and effectively isolated from participation in the particular matter or sharing in its fees. If the law firm has not screened the disqualified attorney, the firm may not continue in the case. The lead counsel in the Daniels firms, Palmeter, stated on the stand at the oral argument that he had not received any confidential information from Attorney Lewin, that his law firm was a small firm and for that reason the firm had not screened Lewin from the case. It doesn't matter whether confidences were in fact imparted by Lewin to the Daniels firm. It is the possibility of the breach of confidence, not the fact of the breach, that triggers disqualification. *Trone* v. *Smith*, 621 F. 2d 994, 998 (9th Cir. 1980); *The NCK Organization Ltd.* v. *Bregman*, 542 F. 2d 128, 132–34 (2nd Cir. 1976); *Westinghouse Electric Corp.* v. *Kerr-McGee Corp.*, 580 F. 2d 1311, 1318 (7th Cir. 1978); *Schloetter* v. *Railoc of Indiana, Inc.*, 546 F. 2d 706, 710 (7th Cir. 1976); See, the comment on Firm Disqualification in 55 *St. Johns Law Review* 346.

When lead counsel, Palmeter, stated that Lewin was not screened, the exception provided in rule 342 became unavailable, and the Daniels law firm must be disqualified.

Both Attorney Lewin and his law firm, Daniels, Houlihan & Palmeter, are disqualified and cannot continue in this case as attorneys for intervenors.

(Slip Op. 81–70)

ASSOCIATED DRY GOODS CORPORATION, PLAINTIFF *v.* UNITED STATES, ET AL., DEFENDANTS

Court No. 81–4–00375

QUOTA ON WOOL SWEATERS

[Judgment for plaintiff.]

(Decided August 5, 1981)

Rode & Qualey (*Micheal S. O'Rourke* and *Patrick D. Gill* on the briefs) for the plaintiff.

Stuart E. Schiffer, Acting Assistant Attorney General; *David M. Cohen*, Branch Director, Commercial Litigation Branch (*Velta A. Melnbrencis* on the briefs); *Pamela Breed*, Deputy Assistant General Counsel, Enforcement and Litigation, Department of Commerce; for the defendants.

Daniels, Houlihan Palmeter, P.C. (*Michael P. Daniels* and *Martin J. Lewin* on the briefs) for American Importers' Association, Textile and Apparel Group, *amicus curiae.*

RAO, *Judge*: Plaintiff, an importer of 100% Shetland wool full-fashioned ladies sweaters from the People's Republic of China (hereinafter PRC), contests the exclusion of its merchandise from entry by the Customs Service pursuant to a quota established for the merchandise by the Committee for the Implementation of Textile Agreements (hereinafter CITA). The case is before this court on defendants' motion to dismiss for failure to state a claim upon which relief can be granted and plaintiff's opposition thereto.[1] The American Importers Association, Textile and Apparel Group (hereinafter AIA–TAG) appears as *amicus curiae*, participating through the filing of briefs and in oral argument. A verified complaint has been served and filed, which defendants have answered.

This case arises under an Agreement Relating to Trade in Cotton, Wool, and Man-made Fiber Textiles and Textile Products between the United States and the PRC (hereinafter the Agreement) on September 17, 1980. Although this agreement specified quantitative limits for some categories of textile products to be exported from the PRC to the United States, the category into which the instant merchandise falls (category 446) is unlimited. See Annexes A and B to the Agreement.

Under Paragraph 8 of the Agreement the United States reserved the right to request consultations with the PRC if it believed that imports in any category or categories not covered by specific limits were due to market disruption, threatening to impede the orderly development of trade between the two countries.[2]

---

[1] Previously, The Chief Judge of this court had denied plaintiff's motion for a preliminary injunction. *See* Slip Op. 81–47 of May 21, 1981.

[2] The full text of Paragraph 8, which delineates the consultation procedure and the remedies available if no agreement is reached is, because of its relevance to points discussed *infra*, set out in its entirety here:

8. (a) In the event that the Government of the United States believes that imports from the People's Republic of China classified in any category or categories not covered by Specific Limits are, due to market disruption, threatening to impede the orderly development of trade between the two countries, the Government of the United States may request consultations with the Government of the People's Republic of China with a view to avoiding such market disruption. The Government of the United States of America shall provide the Government of the People's Republic of China at the time of the request with a detailed factual statement of the reasons and justification for its request for consultation, with current data, which in the view of the Government of the United States of America shows

(1) the existence or threat of market disruption, and

(2) the contribution of exports from the People's Republic of China to that disruption.

(b) The Government of the People's Republic of China agrees to consult with the Government of the United States within 30 days of receipt of request for consultations. Both sides agree to make every effort to reach agreement on a mutually satisfactory resolution of the issue within 90 days of the receipt of the request, unless this period is extended by mutual agreement.

(c) During the 90 day period, the Government of the People's Republic of China agrees to hold its exports to the United States of America in the category or categories subject to this consultation to a level no greater than 35 percent of the amount entered in the latest twelve month period for which data are available.

(d) If no mutually satisfactory solution is reached during these consultations, the People's Republic of China will limit its exports in the category or categories under this consultation for the succeeding twelve months to a level of 20 percent for man-made fiber and cotton product categories (and of 6 percent for wool product categories) above the level of imports entered during the first twelve of the most recent fourteen months preceeding the date of the request for consultations.

On October 18, 1980 the United States requested consultations with the PRC with regard to category 445/446 merchandise. A notice of the request was published in the Federal Register on October 27, 1980 (45 Fed. Reg. 70960). These consultations did not result in agreement, and the United States proceeded to establish import restraint levels. CITA, which was empowered by Executive Order 11651 of March 3, 1972, as later amended, to supervise the implementation of all textile trade agreements, established an import restraint level of 183,706 dozen sweaters.[3]

On January 19, 1981 CITA published a notice in the Federal Register (46 Fed. Reg. 5033–4) directing the Commissioner of Customs to prohibit, effective January 19, 1981, for the period from October 19, 1980 through January 16, 1982, entry into the United States for consumption of wool sweaters in categories 445/446 produced or manufactured in the PRC exported on or after October 19, 1980, in excess of 183,706 dozen.

Plaintiff alleges and defendants admit that this quota was filled on February 9, 1981. Imports from the PRC of category 445/446 sweaters have been refused entry into the United States since that date.

The commercial invoices indicate that on September 25, 1980, 8 days after the Agreement was entered into by the PRC and the United States, plaintiff ordered approximately 1815 dozen sweaters, described as ladies 100% Shetland wool, 5 gauge, from various manufacturers in the PRC, and on October 15, 1980 it ordered an additional 1,000 dozen. This merchandise was exported on January 18, 1981[4] and on January 24, 1981.[5] Plaintiff attempted to enter the merchandise subsequent to February 9, 1981, the date on which the quota was filled, but the Customs Service refused to permit the importations to enter. The merchandise was, and continues to be, stored in a bonded warehouse. Plaintiff subsequently filed timely protests (Nos. 1001–1–002938, 1001–1–002939, 1001–1–002940 and 1001–1–002941), protesting Customs' refusal to release, and the exclusion of, the merchandise into the United States. These protests were denied by the Customs Service and this civil action timely followed. Protest No. 1001–1–003596 is hereby dismissed as untimely as it was not denied until after April 13, 1981, the date on which summons 81–4–00375 was filed.

It is plaintiff's position that its merchandise was wrongfully denied entry because CITA miscalculated the restraint level (quota) at

---

[3] According to the pleadings and briefs, this figure was arrived at by combining the restraint level for the 90-day consultation period and the succeeding 12-month period, based on the formulae contained in the Agreement, Paragraph 8(c) and 8(d).

[4] Entries 81831758-7, 81831764-2, and 81831765-5.

[5] Entry 8183759-0 and 8183175-4.

183,706 dozen sweaters and because CITA erred in concluding that importations of categories 445/446 merchandise from the PRC, between the period of time between September 17, 1980 and October 18, 1980 were causing market disruption, or threat of market disruption, based on the data then available to it with reference both to imports and to domestic production.

Defendants, through their motion to dismiss, bring into question this court's jurisdiction over this controversy, specifically denying that plaintiff has stated a claim as to which relief may be granted. Additionally, defendants contend that this court lacks jurisdiction in this matter because it involves foreign policy considerations and the conduct of foreign affairs. The court disagrees with both contentions.

I

The Customs Courts Act of 1980, Pub. L. 96–417, October 10, 1980, 94 Stat. 1727, not only restated the preexisting jurisdiction of this court, but also specifically provided that "the Court of International Trade shall have exclusive jurisdiction of any civil action commenced against the United States, its agencies, or its officers, that arises out of any law of the United States providing for * * * embargoes or other quantitative restrictions on the importation of merchandise for reasons other than the protection of the public health or safety." 28 U.S.C. §1581(i)(3).

This court has previously considered the scope of this provision with respect to quotas in *Wear Me Apparel Corp.* v. *United States*, ET AL., I CIT —, Slip Op. 81–22, 511 F. Supp. 814 (March 10, 1981), wherein it said:

> However, section 1581(a) is not the only jurisdictional provision applicable here. * * *
>
> * * * * * * *
>
> Section 1581(i), as explained by the House Committee on the Judiciary (H.R. Rept. No. 96–1235, supra at 47), provides a broad "residual grant of jurisdictional authority * * * to eliminate the confusion which currently exists as to the demarcation between the jurisdiction of the district courts and the Court of International Trade * * * [and] makes it clear that all suits of the type specified are properly commenced only in the Court of International Trade."
>
> Given the fact that the claims as to which a protest has been filed directly concern an import quota, these claims obviously arise "out of * * * [a] law * * * providing for * * * quantitative restrictions on the importation of merchandise." In that circumstance, section 1581(i)(3) specifically grants this court jurisdiction to entertain these claims.
>
> Moreover, since these claims involve the administration and enforcement of quantitative restrictions, section 1581(i)(4) also provides jurisdiction. [15 Cust. Bull. No. 14 at pp. 30–1.]

Defendants have conceded that this court has jurisdiction pursuant to 28 U.S.C. 1581(a), but only to the extent that this court could determine whether the Customs Service rightfully carried out the instructions of CITA in administering the quota. We conclude that this court has plenary jurisdiction to review the entire matter pursuant to section 1581(i) (3) and (4).

Defendants also address the issue as to whether plaintiff has stated a claim. The verified complaint alleges that plaintiff is the importer of record, that its merchandise was denied entry due to agency action resulting in restraints on the number of sweaters that can be imported from the PRC, that it has been injured by this agency action in that it is losing sales on this merchandise and related sales on other merchandise, that the agency action was based in incorrect or incomplete data, and plaintiff prayed for specific and general relief. Considering the fact that the Customs Courts Act of 1980 was enacted in part to provide relief for importers aggrieved by agency action in one forum, this court concludes that plaintiff's complaint sufficiently states a cause of action.

Defendants also contend that plaintiff is attempting to interfere with the proper function of the Executive in foreign policy matters, and that the United States will be hindered in its further negotiations with the PRC relative to the Agreement and other matters if plaintiff is given the relief it seeks. However, plaintiff's sweaters have already been exported from the PRC and the irrevocable letters of credit have already accrued to the benefit of the PRC manufacturers. The impact of permitting or denying entry to plaintiff's merchandise will be felt by it alone and will have little or no bearing on further negotiations, either to expand or restrict the number of sweaters in categories 445/446 permitted entry into this country.

This court recognizes that actions of the President with respect to the negotiation, and the signing of treaties and foreign agreements are beyond its review. *Cf. William A. Foster & Co. (Inc.) et al. v. United States* 20 CCPA 15, T.D 45673 (1932), and generally, Sturm, *Customs Law and Administration*, § 60.2. However, it can be hardly concluded that CITA rises to the power and authority conferred on the President by the Constitution and by Congress. Absent a clear mandate from Congress that CITA's actions are to be vested with the mantle of Presidential immunity from judicial review, this court concludes that Congress did not intend to extend the President's protective shield to cover CITA's actions.

Additionally CITA's action in determining that consultations with the PRC were necessary with respect to categories 445/446 were more administrative than foreign policymaking . To arrive at a belief that there was market disruption or the threat of market disruption,

CITA had to evaluate import data and the state of the domestic industry. If those actions or determinations were not based on sufficient data or if incorrect conclusions were drawn from such data and plaintiff was injured as a result, review of CITA's determinations by this court is proper.

II

Pursuant to section 8 (a) of the Agreement, a condition precedent to a request for consultations by the Government of the United States with the Government of the PRC is a belief that imports from the PRC are threatening to impede the orderly development of trade between the two countries due to market disruption.[6] The term "market disruption" is not defined in the Agreement, but the parties have agreed that the definition of the term provided in Paragraphs I and II of Annex A of the Arrangement Regarding International Trade in Textiles commonly known as the Multifiber Agreement (hereinafter MFA), 39 Fed. Reg. 13308, 13311 (April 12, 1974), is applicable.[7] Market disruption, according to the MFA, must be based on the existence of serious damage to domestic producers or actual threat thereof caused by (1) a sharp and substantial increase or imminent increase of imports of particular products from particular sources and (2) the offering of these products at prices which are substantially below those prevailing for similar goods of comparable quality in the market of the importing country.

The detailed factual statement which the United States was required to provide to the PRC with the request for consultations pursuant to section 8(a) of the Agreement did not establish the second of these factors. Its findings of offerings of "these products" related to all women's wool sweaters, not ornamented, in the middle value range classifiable under TSUS item 382.5871, but there is no indication that the domestic merchandise compared was "similar goods of comparable quality." [8] Indeed, it appears that what was compared was all women's wool sweaters, not ornamented, valued over $5 per pound, produced in the United States. A valid comparison was not made.

---

[6] See note 2, *supra*.

[7] See, particularly, defendants' brief filed April 21, 1981, pp. 37–45.

[8] Market Statement to China of October 7, 1980:

* * * The women's wool sweaters imported from China under TSUSA 382.5871 are in the middle value range among the major foreign suppliers but below the U.S. price (see table 5).

TABLE 5.—*Import values and domestic price (U.S. dollars per dozen)*

[TSUSA No. 382.5871—Women's wool sweaters, not ornamented, valued over $5 per pound]

China	$81.65
Taiwan	77.10
Hong Kong	100.45
United States	151.20

NOTE.—Import values based on C/F duty-paid values.

It therefore becomes unnecessary for this court to decide whether CITA should have considered those factors indicating the existence of damage, such as turnover, market share, profits, export performance, employment, etc., enumerated in Paragraph I of Annex A of the MFA as contended by plaintiff and *amicus curiae* or whether, as contended by defendants, those factors are relevant only to the existence of actual damage rather than the threat of damage. The finding by CITA of threat of market disruption in this case is unsupported by sufficient data.

III

Plaintiff also contends that the formulae utilized to arrive at the restraint level were improperly applied. This court finds that in arriving at a quota of 183,706 dozen sweaters, CITA improperly combined the restraint levels established during the 90-day consultation period pursuant to section 8(c) and that established by section 8(d) of the agreement if the parties could not agree during the consultation period, and improperly imposed the restraint level retroactively to October 19, 1980, the date of the receipt of the request for consultation by the PRC.

Section 8(d) of the Agreement provides that if no mutually satisfactory solution is reached during the consultations, the PRC will limit its exports in the category or categories under the consultation *for the succeeding twelve months* to a level of 6 percent for wool product categories above the level of imports entered during the first twelve of the most recent fourteen months preceding the date of the request for consultations. It does not even impliedly permit the combination of this restraint level with that provided for in section 8(c) which is applicable during the 90-day consultation period, nor does it permit retroactive application of the restraint level to the date of receipt of the request for consultations by the PRC.

Defendant argues that plaintiff has no standing to question the terms of a trade agreement with a foreign country and that this court lacks jurisdiction to interpret the terms of trade agreements. The short answer to both these arguments is that plaintiff seeks, not to vary or question the terms of the agreement, but to review the actions of CITA, a government agency with specific delegated authority and duties, in implementing a restraint level on merchandise based on its (CITA's) interpretation of the meaning of the terms of that Agreement.[9] That this court has jurisdiction to review agency action which impacts on imports is well settled.

It is, therefore, the decision of this court that within 90 days CITA

[9] CITA comes within the definition of governmental agency as "a subordinate creature of federal, state or local government created to carry out a governmental function or to implement a statute or statutes." *Blacks Law Dictionary*, 1979.

shall issue a new determination after a re-evaluation of the data on which it based its findings of threat of market disruption. If, on reconsideration of all pertinent data, CITA finds that threat of market disruption, did in fact exist at the time it requested consultations with the PRC under the Agreement, it shall recalculate the restraint level in conformance with the holding in this case and give it prospective application from the end of the consultation period, that is, from January 19, 1981.

Since plaintiff attempted to enter its merchandise for consumption on February 18, 19, 26, and 27, 1981, a period during which the quota would have been open if it had not been applied retroactively, it is further adjudged that plaintiff's merchandise should be released. It is therefore ordered and adjudged that the Customs Service release the plaintiff's merchandise the subject of this claim with the exception of the merchandise the subject of Protest No. 1001–1–003596, which is untimely, from bonded warehouse and permit it to enter the stream of commerce of the United States.

Defendant's motion to dismiss is denied.

(Slip Op. 81–71)

COMMITTEE TO PRESERVE AMERICAN COLOR TELEVISION (A.K.A. COMPACT) ET AL., PLAINTIFFS *v.* UNITED STATES, DEFENDANT

Court No. 81–3–00258

ORDER

(Dated August 5, 1981)

MALETZ, *Judge*: Upon consideration of (i) defendant's motion that the court suspend discovery by entering an order to the effect that discovery in this case, beyond disclosure of the administrative record, not be conducted until a decision is rendered by this court in *Zenith Radio Corp.* v. *United States*, Civil Action 80–5–00861; (ii) plaintiffs' opposition thereto; (iii) plaintiffs' crossmotion for a discovery conference; and (iv) defendant's opposition thereto, it is hereby ordered:

1. That the administrative record filed in *Zenith*, *supra*, shall be made available to counsel for plaintiffs, pursuant to a protective order, within 15 days after the date of this order;

2. That defendant's motion to suspend discovery is denied. As to this, the court notes that plaintiffs' first request for discovery does not require any new search by defendant of its files but rather re-

quires the reproduction of those documents already identified and made available to counsel for plaintiff in *Zenith*. Given this circumstance, discovery here, even though duplicative of discovery already carried out in *Zenith*, does not in the court's view constitute such a clear case of hardship or inequity on defendant as to warrant a stay of discovery. See, e.g., *Landis* v. *North American Co.*, 299 U.S. 248, 255 (1936); *United Refining Co.* v. *Department of Energy*, 486 F. Supp. 99 (W.D. Pa. 1980).

3. That plaintiffs' motion for a discovery conference is granted and such conference shall be held on Thursday, September 3, 1981, at 2:30 P.M. in the chambers of the undersigned.

(Slip Op. 81–72)

ZENITH RADIO CORPORATION, PLAINTIFF *v.* UNITED STATES, DEFENDANT

Court No. 80–5–00861

Memorandum and Order

(Dated August 6, 1981)

MALETZ, *Judge*: Defendant has filed a motion pursuant to rule 37 to impose sanctions upon plaintiff in the form of an order providing (i) that the judgment in defendant's favor be entered on the allegations contained in paragraphs 32, 33, 34, 35 (3rd through 5th sentences), and 36 of plaintiff's First Amended Complaint; and (ii) that plaintiff shall within 14 days pay to defendant the sum of $4.79 million. The basis of the motion is this. Plaintiff originally advanced an objection based on prematurity in response to several of defendant's first interrogatories. Defendant alleges that this objection consisted of a deliberate falsehood interposed solely for delay and for the purpose of concealing the lack of substance in plaintiff's case on the merits and that the sanctions sought are thus appropriate.

Upon consideration of defendant's motion; plaintiff's memorandum in opposition to such motion; and defendant's reply to plaintiff's memorandum in opposition, it is hereby ordered that defendant's motion for sanctions pursuant to rule 37 be denied for the following reasons:

First, sanctions pursuant to rule 37(b) may be imposed only where, unlike the situation here, the court has issued a discovery order and that order has been violated. See, e.g., *Schleper* v. *Ford Motor Co.*, 585 F. 2d 1367, 1371 (8th Cir. 1978); *Fisher* v. *Marubeni Cotton Corp.*, 526 F. 2d 1338, 1341 (8th Cir. 1975); *Britt* v. *Corporacion*

Peruana de Vapores, 506 F. 2d 927, 932 (5th Cir. 1975); 8 Wright & Miller, *Federal Practice and Procedure*, §§ 2282; 2289 (1970).

Also, rule 37(c) does not authorize sanctions here. That provision is applicable only where there has been a serious or total failure of a party to respond to interrogatories—a circumstance not present here. See, e.g., *Laclede Gas Co.* v. *C. W. Warnecke Corp.*, 604 F. 2d 561, 565 (8th Cir. 1979); *Fox* v. *Studebaker-Worthington, Inc.*, 516 F. 2d 989, 995 (8th Cir. 1975); 8 Wright & Miller, *supra*, § 2291. See also *Sigliano* v. *Mendoza*, 642 F. 2d 309, 310 (9th Cir. 1981).

Further, in the court's view, defendant has not shown that the objection of prematurity which plaintiff originally advanced with respect to defendant's first interrogatories consisted of a deliberate falsehood.

(Slip Op. 81–73)

OLD REPUBLIC INSURANCE COMPANY, PEERLESS INSURANCE COMPANY AND INSURANCE COMPANY OF NORTH AMERICA, PLAINTIFFS *v.* WINSTON E. PITMAN, DISTRICT DIRECTOR OF CUSTOMS, MIAMI, FLORIDA: GEORGE J. MCMANUS, DISTRICT DIRECTOR OF CUSTOMS, SAVANNAH, GEORGIA: ROBERT N. BATTARD, REGIONAL COMMISSIONER OF CUSTOMS, MIAMI, FLORIDA: AND THE UNITED STATES CUSTOMS SERVICE, DEFENDANTS

Court No. 81–7–00891

Memorandum and Order on Plaintiffs' Motion for Preliminary Injunction and Defendants' Cross-Motion to Dismiss

[Plaintiffs' motion for preliminary injunction granted; defendants' cross-motion to dismiss denied.]

(Dated August 7, 1981)

Sandler & Travis, Esqs. (*Gilbert Lee Sandler and Robert I. Targ, Esqs.*, of Counsel) for plaintiffs.

Stuart E. Schiffer, Acting Assistant Attorney General (*Joseph I. Liebman*, Attorney in Charge, Field Office for Customs Litigation, *Jerry P. Wiskin*, trial attorney), for the defendants.

Barry H. Nemmers, Staff Attorney, for American Importers Association, amicus curiae.

Tompkins & Davidson, esqs. (*Norman C. Schwartz* of counsel) for National customs brokers & forwarders association of America, Inc., amicus curiae.

RICHARDSON, *Judge*: This is an action to review decisions of the District Director of Customs, Miami, Florida, the District Director of Customs, Savannah, Georgia and the Regional Commissioner

of Customs Miami, Florida, refusing to honor bonds issued by plaintiffs' surety companies in conjunction with entries of merchandise into the United States through the Miami and Savannah Customs Districts, without a notice and revocation proceeding described in 31 Code of Federal Regulations (CFR) Section 223.17.

On Monday, July 13, 1981 the District Director of Customs at Miami sent letters to plaintiffs Old Republic Insurance Company and Peerless Insurance Company, and the District Director of Customs of Savannah, Georgia sent an identical letter to plaintiff Insurance Company of North America informing said plaintiffs that:

> The continued disregard of our request for payment on outstanding claims for which you are liable leaves us no alternative but to reject your surety bond on entries filed in this district * * *. This notice will be effective immediately.

Identical letters were sent to eight other insurance companies.

Plaintiffs are on the approved list of sureties issued by the Secretary of the Treasury July 1, 1981, and the rejection of their bonds by the said District Directors, on July 13, 1981, was the first time the Customs Service had undertaken to collect its revenue from alleged delinquent accounts by refusing to honor a customs bond approved by the Secretary of the Treasury.

In response to the rejection of their bonds the plaintiffs, Old Republic Insurance Company and Peerless Insurance Company filed a motion for a Temporary Restraining Order and Application for Preliminary Injunction in the United States Court of International Trade which was heard by the Court in New York, July 16, 1981. After hearing plaintiffs' counsel in support of said motion and application, and the defendants' counsel in opposition at 10:00 A.M. on July 16, 1981, the Court on the same day at 4:30 P.M. granted the plaintiffs' motion for a Temporary Restraining Order for ten days, and ordered the defendants to show cause before the Court on July 27, 1981 at 10:30 o'clock, A.M., why a preliminary injunction should not issue.

Since this Court granted the Temporary Restraining Order against Robert N. Battard, Regional Commissioner of Customs and Winston N. Pitman, District Director of Customs at Miami, Florida, July 16, 1981, the Regional Commissioner, on July 24, 1981, notified the ten affected surety companies within the Miami Region that "the U.S. Customs Service will not take any action to reject surety bonds pending the outcome of a final decision issued by the Court of International Trade." This representation to the sureties does not render the question on injunctive relief moot, inasmuch as the Regional Commissioner still claims authority to reject bonds. A moot question is not one that ebbs and flows as the tide, but one that does not present the possi-

bility of a recurrence. Also, the Miami situation has had repercussions in ports in other regions not under Commissioner Battard's jurisdiction, including New York City, San Francisco, California, and Union, New Jersey; and plaintiffs furnish surety bonds in a number of ports throughout the United States.

Also, on July 24, 1981, plaintiffs filed a Motion to Change Place of Hearing from New York, N.Y. to Miami, Florida, and the defendants responded that they had no opposition to a changed place of hearing, but requested that the Temporary Restraining Order be extended ten days from July 27, 1981 to August 6, 1981.

Chief Judge Edward D. Re, in accordance with 28 U.S.C. § 253(b) and 256(a) and Rule 77(c)(2) of the Rules of the United States Court of International Trade, designated Miami, Florida as the place of hearing on the motion for a Preliminary Injunction on August 6, 1981.

Plaintiff's pending Motion to Amend its Verified Complaint to include Insurance Company of North America as a party plaintiff, as it had received a bond rejection letter from George J. McManus, District Director of Customs at Savannah, Georgia; and to join said District Director as a party defendant, was granted over defendants' objection, before the hearing on the motion to grant a Preliminary Injunction began.

After the commencement of the hearing on the Motion for a Preliminary Injunction, the Court inquired of counsel if there was any objection to consolidating the hearing with a trial on the merits in accordance with Rule 65(a)(2). Counsel for plaintiffs agreed to do so, but since counsel for defendants stated that he was opposed, as he was not prepared for a trial on the merits, the Court did not order a consolidation.

JURISDICTION

This Court has jurisdiction over the parties and subject matter of the above-styled cause pursuant to 28 U.S.C. 1581(i)(4).

The Plaintiffs are entitled to bring the above-styled cause pursuant to 28 U.S.C. 2631(i).

This Court is empowered pursuant to 28 U.S.C. 2643(c)(1) to grant the relief requested by the Plaintiffs.

PRELIMINARY INJUNCTION

Have the plaintiffs made the requisite showing for the issuance of a preliminary injunction?

The factual information pertinent to plaintiffs' motion for a preliminary injunction in set forth in their Amended Verified Complaint

and the evidence adduced at the hearing on the Motion for a Preliminary Injunction, August 6, 1981.

Plaintiffs contend that as a result of defendants' rejection of their bonds they were barred from writing any new single entry bonds in the Miami and Savannah Districts and thus were virtually put out of business there until the issuance of the Temporary Restraining Order. Plaintiffs' witness, Lowell A. Welnak of Keene, New Hampshire, Vice-President for Claims of Peerless Insurance Company for ten years, and Gerson M. Joseph, a licensed customhouse broker and a member of the Florida Brokers Association, who uses Peerless Insurance Company's surety bonds through said company's agent in Florida, Loren Brokerage, in their testimony supported this contention of plaintiffs.

The defendant did not call any witnesses, and relied on its Memorandum with extensive citations in opposition to plaintiffs' Motion for a Preliminary Injunction filed August 5, 1981.

The witnesses testified that the only notice that they received from defendants was a bar notice of July 13, 1981, informing them that effective immediately they could no longer write bonds in the district by reason of their alleged delinquency in making payment on some outstanding entry accounts.[1] Plaintiffs say that this action is illegal and violative of procedural due process, citing the fifth amendment to the Federal Constitution, a number of statutory and Code of Federal Regulations provisions including 19 U.S.C. 1623 and 31 Code of Federal Regulations (CFR) 223.17.

It is the defendants' position that they have a right to refuse to accept plaintiffs' bonds based upon their record of non-payment, citing 19 U.S.C. 1623(b)(2) and 19 CFR 113.14, 113.15.

Plaintiffs respond by asserting that they have never refused to pay due bills, have not been sued therefor by the Government upon any of their bonds, that their names appear on the current list of approved bonding companies promulgated by the Treasury Department on July 1, 1981, and further, that defendants only recourse against plaintiffs is by way of litigation upon the bonds, or by appropriate proceedings before the Treasury Department for the revocation of their bonding privileges.

The Court's jurisdiction in this case is invoked under 28 U.S.C. 1581(i)(4), which is the broad, residual grant of power to the Court to adjudicate controversies arising in the administration of customs laws and regulations. Bonding practice is an important part of the customs administrative machinery that exists for the protection and

[1] This directive was modified by virtue of an announcement made by Government counsel in open court to the effect that defendants had postponed suspension of plaintiff's bonding privileges in the district until August 3, 1981.

collection of the Government's revenue. And Congress, under a broad, enabling statute, has conferred authority and responsibility therefor upon the Secretary of the Treasury ("Secretary"). See 19 U.S.C. 1623. Section 1623 deals both with bonds which are not specifically required by law as well as with bonds which are required by law, regulation or instruction of the Secretary to the Customs Service ("Service").

Section 1623(b)(2) on which defendants' counsel relies provides that when a bond is required or authorized by law, regulation, or instruction which the Secretary or the Service is authorized to enforce, the *Secretary* may provide for the approval of the sureties on such bond without regard to any general provision of law. Thus, the current list of approved sureties to which plaintiffs call attention is undoubtedly a manifestation of the *Secretary's* exercise of this statutory power.

Sections 113.14 and 113.15 of 19 CFR on which defendants' counsel also rely deal with bonding powers which the *Secretary*, under the enabling authority of section 1623, has delegated to the district director. Section 113.14 describes and enumerates various types of bonds which may be *executed*, subject to approval of the district direct, among which are:

> (g) *Immediate Delivery and Consumption Entry Bond*—(1) *Single entry bond, Customs Form* 7551. Immediate Delivery and Consumption Entry Bond (Single Entry), Customs Form 7551, in the amount equal to the value of the articles, as set forth in the entry, plus the estimated duty (including any taxes required by law to be treated as duties) and the estimated amount of any other taxes imposed upon or by reason of importation, as determined at the time of entry * * *.

And section 113.15 provides that the district director may approve any of the bonds described in section 113.14 if he is satisfied that the *amount of the bond is sufficient*, and it is in *proper form*. Obviously, this regulation is derivative of the Secretary's enabling authority under section 1623(b)(1) to *prescribe the conditions and form of such bonds* and *fix the amount of the penalty*. Customhouse broker, Gerson M. Joseph, testified that up until July 13, 1981 the only thing the Customs Service did with surety bonds was to approve or disapprove them as to form and amount required.

31 CFR 223.17 and 223.18 on which plaintiffs rely deal with revocation of a surety's certificate of authority, and are also manifestations of the *Secretary's* exercise of section 1623(b)(2) power. Section 223.17 provides that whenever it appears that a company (surety) is not complying with the regulations, the *Secretary* will (1) notify the company of the facts or conduct which indicate such failure, and provide opportunity to the company to respond, and

(2) provide opportunity to the company to demonstrate or achieve compliance with the requirements.

The regulation further provides that the *Secretary* shall revoke a company's certificate of authority with advice to it if (1) the company does not respond satisfactorily to his notification of non-compliance, or (2) the company fails to demonstrate or achieve compliance after having been provided an opportunity to do so.

And, insofar as Customs bonding practice is concerned, the revocation proceeding described in section 223.17 is set into motion in accordance with the provisions of section 223.18 which mandates that the company promptly *honor its bonds*. Section 223.18 provides [(a)] if an agency's (district director) demand upon a company (surety) for payment of a claim against it is not settled to the agency's satisfaction, and the agency's review of the situation thereafter establishes that the default is clear and the company's refusal to pay is not based on adequate grounds, *the agency may make a report to the Secretary*, including (1) a copy of the bond, (2) the basis for the claim against the company, (3) a chronological resume of efforts to obtain payment, (4) a statement of reasons offered for non-payment, and (5) a statement of the agency's view in the matter.

The regulation further provides [(b)] on receipt of the report the Secretary, if the circumstances warrant, will notify the company concerned that the agency report may demonstrate that the comapny is not keeping and performing its contracts, and that, in the absence of satisfactory explanation, the company's default may preclude the renewal of the company's certificate of authority.

It is clear from the foregoing that the Secretary of the Treasury has reserved unto himself the power to terminate a surety's privilege to write bonds in connection with customs matters while delegating to the district director only the power to approve the form and amount of the bonds—thus affording the latter official no local option for resolving disputes arising from bond matters at variance with the reserved power, or to set himself up as the final arbiter of disputes that he is involved in with sureties over alleged delinquencies in payments. There is no question but that a refusal on the part of a district director to accept customs entries with plaintiff's bonds accompanying them, whether acting on his own or under the direction of a regional commissioner of customs, cannot be interpreted as the exercise of a section 1623(b)(1) power to approve the form or amount of a bond, but is in fact an act of *finality* which invades a section 1623(b)(2) power with grave consequences attached to it.

Nothing can disturb the confidence of an importing public faster or with more certainty than the knowledge, or even a mere suggestion that a surety on the public's bonds lacks the financial stability

that the public was led to believe it possessed when engaged. Obviously, therefore, it was to guard against such an event that the Secretary chose to preside over events influencing the exercise of such devastating power, and then only after shepherding these events through a carefully detailed procedure designed to accord the surety protection of a valuable property right safeguarded by constitutional due process.

On the basis of the papers before the court, the testimony of plaintiffs' witnesses and the arguments of counsel it clearly appears that at the time the bar order went out a dialogue was in progress between plaintiffs and defendants relative to verification of plaintiffs' liability with respect to particular entries from among a mass of entry data on computer print-outs.

While the defendants did not present any witnesses, it appears to the court from argument by Government counsel, Mr. Wiskin, that there is room for improvement on plaintiffs' part of business methods calculated to make prompt and ready identification of their entry and bond responsibilities—a fault which may well have exacerbated the situation and led to understandable frustration on the part of customs officials in the district. There is nothing before the court to indicate that plaintiffs were in *default* on any of the bonds or had *refused* to make payment under any of them, or that defendants had filed a delinquency report on plaintiffs with the Secretary of the Treasury to invoke a section 223.18 proceeding against then.

The Court is, therefore, convinced that plaintiffs have shown the requisite injury and clear legal right to relief which is not counterbalanced by any showing of injury or loss to the Government, whose remedies remain fully intact. Consequently, there is no need to require the plaintiffs to give security, and the defendants' motion that the plaintiffs be required to furnish a bond in the amount of defendant's unsettled claims is denied.

The Order granting the plaintiffs' motion for a preliminary injunction is attached to this memorandum.

ORDER

This proceeding having been regularly brought on for hearing Thursday, August 6, 1981, in Miami Florida, pursuant to the motion of the plaintiffs for a Preliminary Injunction against the defendants for the purpose of enjoining them from refusing to honor the surety bonds issued by the plaintiffs, Old Republic Insurance Company, Peerless Insurance Company, and Insurance Company of North America in connection with entries of merchandise into the United States through the Miami, Florida and Savannah, Georgia Customs Districts; and the Court having heard and considered the evidence adduced, the arguments pre-

sented as well as the memoranda submitted by counsel, the Court doth conclude that the rejection of plaintiffs surety bonds on entries filed in the Districts of Miami and Savannah by the District Directors, dated July 13, 1981, without prior notice and opportunity for hearing as required by 31 CFR 223.17 will cause irreparable harm, injury, loss, and damage, in that it forces members of the importing public who are customers of plaintiffs to seek alternative sources for purposes of obtaining surety bonds on importations, with the possible permanent loss of such customers by the plaintiffs, and that plaintiffs are likely to prevail on the merits. Therefore, it is:

ORDERED ADJUDGED AND DECREED that Winston E. Pitman, District Director of Customs, Miami, Florida; George J. McManus, District Director of Customs, Savannah, Georgia; Robert N. Battard, Regional Commissioner of Customs, Miami, Florida; and the United States Customs Service, together with their agents, servants, employees and representatives under the direct or indirect control of said Defendants, are hereby preliminarily enjoined from.

1. Refusing to honor surety bonds issued by the plaintiffs, OLD REPUBLIC INSURANCE COMPANY, PEERLESS INSURANCE COMPANY and INSURANCE COMPANY OF NORTH AMERICA in conjunction with entries of merchandise into the United States through the Miami and Savannah Customs Districts, or any other Customs District.

2. Engaging in any conduct that results in the surety bonds issued by the plaintiffs, OLD REPUBLIC INSURANCE COMPANY, PEERLESS INSURANCE COMPANY and INSURANCE COMPANY OF NORTH AMERICA being dishonored with regard to any entries of merchandise made into the United States through the Miami and Savannah Customs Districts, or any other Customs District.

3. Revoking, withdrawing, or cancelling the status of OLD REPUBLIC INSURANCE COMPANY, PEERLESS INSURANCE COMPANY and INSURANCE COMPANY OF NORTH AMERICA as sureties approved by the Secretary of Treasury to issue surety bonds with regard to entries of merchandise into the United States through the Miami and Savannah Customs Districts, or any other Customs District.

4. Implementing any of their directives or policy statements that result in the surety bonds of OLD REPUBLIC INSURANCE COMPANY, PEERLESS INSURANCE COMPANY and INSURANCE COMPANY OF NORTH AMERICA being dishonored with regard to the entry of merchandise into the United States through the Miami and Savannah Customs Districts, or any other Customs District.

5. Failing to release any merchandise covered by said Customs Surety bonds for the sole reason that said merchandise is subject to such bonds.

The Temporary Restraining Order issued July 16, 1981 is hereby dissolved.

This Preliminary Injunction shall remain in full force and effect until disposition of this case on the merits or until such further order of the Court.

Defendant's motion to dismiss is overruled.

A copy of this order shall be forthwith served on each of the defendants herein.

Dated: Miami, Florida; August 7, 1981.

Decisions of the United States Court of International Trade

Abstracts

Abstracted Protest Decision

DEPARTMENT OF THE TREASURY, *August 10, 1981.*

The following abstracts of decisions of the United States Court of International Trade at New York are published for the information and guidance of officers of the customs and others concerned. Although the decisions are not of sufficient general interest to print in full, the summary herein given will be of assistance to customs officials in easily locating cases and tracing important facts.

WILLIAM T. ARCHEY,
Acting Commissioner of Customs.

DECISION NUMBER	JUDGE & DATE OF DECISION	PLAINTIFF	COURT NO.	ASSESSED	HELD	BASIS	PORT OF ENTRY AND MERCHANDISE
				Par. or Item No. and Rate	Par. or Item No. and Rate		
P81/139	Maletz, J. August 4, 1981	International Seaway Trading Corp.	67/47800, etc.	Item 700.60 20%	Item 700.70 15%, 13%, 12%, 10%, 9% or 7.5%	International Seaway Trading Corp. v. U.S. (C.D. 4773)	Seattle Footwear

Decisions of the United States Court of International Trade

Abstracts

Abstracted Reappraisement Decision

DECISION NUMBER	JUDGE & DATE OF DECISION	PLAINTIFF	COURT NO.	BASIS OF VALUATION	HELD VALUE	BASIS	PORT OF ENTRY AND MERCHANDISE
R81/285	Richardson, J. August 4, 1981	Kent International	79-11-01751, etc.	Export value	F.o.b. prices set forth in invoices of Willing Co., Ltd.	Agreed statement of facts	Philadelphia; San Juan; Boston; Seattle; San Francisco; Miami; Houston; New York Bicycles

International Trade Commission Notices

Investigations by the U.S. International Trade Commission

DEPARTMENT OF THE TREASURY, AUGUST 20, 1981

The appended notices relating to investigations by the U.S. International Trade Commission are published for the information of Customs officers and others concerned.

WILLIAM T. ARCHEY,
Acting Commissioner of Customs.

SALMON GILL FISH NETTING OF MANMADE FIBERS FROM JAPAN

Notice of Commission Request for Comments Concerning Institution of Section 751(b) Review Investigation

AGENCY: United States International Trade Commission.

ACTION: Request for comments regarding institution of section 751(b) review investigation concerning affirmative determination in Investigation No. AA1921-85, Fish Nets and Netting of Manmade Fibers from Japan.

SUMMARY: The Commission invites comments from the public on whether changed circumstances exist which warrant the institution of an investigation pursuant to section 751(b) of the Tariff Act of 1930 (19 U.S.C. 1675(b)), to review the Commission's affirmative determination in investigation No. AA1921-85 regarding salmon gill fish netting of manmade fibers from Japan. The purpose of the proposed section 751(b) review investigation, if instituted, would be to determine whether an industry in the United States would be materially injured, would be threatened with material injury, or the establishment of an industry would be materially retarded, by reason of imports of salmon gill fish netting of manmade fibers if the antidumping order regarding fish netting of manmade fibers from Japan is modified or revoked with respect to salmon gill fish netting of manmade fibers provided for in item 355.45 of the Tariff Schedules of

the United States. Revocation or modification of the dumping finding as to salmon gill fish netting would not affect the Commission's affirmative determination as to other types of fish netting from Japan.

SUPPLEMENTARY INFORMATION: On April 18, 1972, the Commission determined that an industry in the United States was injured within the meaning of the Antidumping Act, 1921, by reason of imports of fish netting of manmade fibers from Japan determined by the Secretary of Treasury to be sold or likely to be sold at less than fair value (LTFV).

On June 1, 1972, the Department of the Treasury issued a finding of dumping (T.D. 72–158) and on June 9, 1972, published notice of the dumping finding in the Federal Register.

On July 28, 1981, the Commission received a request to review its affirmative determination in investigation No. AA1921–85. The request was filed pursuant to section 751(b) of the Tariff Act of 1930 by the Law Offices of George R. Tuttle on behalf of Seattle Marine and Fishing Supply Co., Nordby Supply Co., Redden Net Co., Fisheries Supply Co., Lummi Fishery Supply Co., Nets, Inc., Tacoma Marine Supply, Astoria Marine Supply, and Englund Marine Supply, importers of salmon gill fish netting from Japan.

Written Comments Requested

Pursuant to section 207.45(b)(2) of the Commission's Rules of Practice and Procedure (46 FR 18023), the Commission requests comments on whether the following alleged changed circumstances are sufficient to warrant institution of a review investigation: (1) the likelihood that there has been no significant manufacturing of salmon gill netting in the United States comparable to that imported from Japan, since approximately 1974, and (2) the likelihood that the decline of salmon gill netting production in the United States is not a result of LTFV imports from Japan, but rather the inability of U.S. netting manufacturers to produce a commerically competitive product due to technology inferior to that in Japan. In addition, comments are invited on petitioners's request that the Commission's injury determination on salmon gill fish netting of manmade fibers be revoked retroactively to approximately 1974 and that the determination be made within sixty days of institution rather than the one hundred and twenty days provided for in section 207.45(b)(3).

The Request for Review of the Injury Determination

Copies of the request for review of the injury determination and any other public documents in this matter are available to the public during official working hours (8:45 a.m. to 5:15 p.m.) in the Office of the Secretary, U.S. International Trade Commission, 701 E Street NW., Washington, D.C. 20436; telephone 202–523–0161.

Additional Information

Under section 201.8 of the Commission's Rules of Practice and Procedure (19 CFR 201.8), the signed original and 19 true copies of all written submissions must be filed with the Secretary to the Commission, 701 E Street, NW., Washington, D.C. 20436. All comments must be filed no later than 30 days after publication of this notice in the Federal Register. Any person desiring to submit a document (or portion thereof) to the Commission in confidence must request business confidential treatment under section 201.6 of the Commission's Rules of Practice and Procedure (19 CFR 201.6). Such requests should be directed to the Secretary to the Commission and must include a full statement of the reasons why the Commission should grant such treatment. Each sheet must be clearly marked at the top "Confidential Business Data." The Commission will either accept the submission in confidence or return it. All nonconfidential written submissions will be available for public inspection in the Office of the Secretary.

FOR FURTHER INFORMATION CONTACT: Dan Leahy, senior investigator, Office of Investigations, U.S. International Trade Commission (202–523–1369) or Jane Albrecht, Esq., U.S. International Trade Commission (202–523–1627).

By order of the Commission.

Issued: August 11, 1981.

KENNETH R. MASON,
Secretary.

In the Matter of CERTAIN SPRING ASSEMBLIES AND COMPONENTS THEREOF, AND METHODS FOR THEIR MANUFACTURE	Investigation 337–TA–88

Notice of Issuance of Exclusion Order

AGENCY: U.S. International Trade Commission.

ACTION: Issuance of exclusion order.

SUPPLEMENTARY INFORMATION: The Commission instituted this investigation to determine whether there is a violation of section 337 of the Tariff Act of 1930 (19 U.S.C. § 1337) in connection with the importation or sale of certain spring assemblies and components thereof, and published notice thereof in the Federal Register of August 8, 1980 (45 FR 52945).

On July 14, 1981, the Commission unanimously determined that there is a violation of section 337 in the unauthorized importation and sale of certain spring assemblies and components thereof which infringe certain claims of U.S. Letters Patent 3,782,708 and which are the product of a process which, if practiced in the United States, would infringe certain claims of U.S. Letters Patent 3,866,287. The Commission further determined that the appropriate remedy is an order directing that the articles in question be excluded from entry into the United States.

Copies of the Commission's Action and Order, the Commission's opinion, and all other public documents on the record are available for inspection by the public during official working hours (8:45 a.m. to 5:15 p.m.) in the Office of the Secretary, U.S. International Trade Commission, 701 E Street NW., Room 161, Washington, D.C. 20436, telephone 202–523–0161.

FOR FURTHER INFORMATION CONTACT: Jane Albrecht, Esq., Office of the General Counsel, U.S. International Trade Commission, telephone 202–523–1627.

By order of the Commission.

Issued: August 10, 1981.

KENNETH R. MASON,
Secretary.

In the Matter of
CERTAIN SURFACE GRINDING MACHINES AND LITERATURE FOR PROMOTION THEREOF | Investigation No. 337-TA-95

Notice of Termination of Respondents

AGENCY: U.S. International Trade Commission.

ACTION: Termination of investigation as to respondents Bob's Machinery Sales and Cassiere Machinery Company.

SUMMARY: The Commission has terminated the above-captioned investigation as to respondents Bob's Machinery Sales and Cassiere Machinery Company based on written settlement agreements.

SUPPLEMENTARY INFORMATION: This investigation is being conducted under section 337 of the Tariff Act of 1930 (19 U.S.C. § 1337) and concerns alleged unfair trade practices in the importation into and sale in the United States of certain surface grinding machines and literature for the promotion thereof. The complainant, Brown and Sharpe Mfg. Co., and respondents Bob's Machinery Sales and Cassiere Machinery Company jointly moved to terminate

the investigation as to aforementioned respondents on the basis of written settlement agreements.

Copies of the Commission's Action and Order and all other non-confidential documents filed in connection with the investigation are available for inspection during official business hours (8:45 a.m. to 5:15 p.m.) in the Office of the Secretary, U.S. International Trade Commission, 701 E St., NW., Washington, D.C. 20436, telephone 202-523-0155.

FOR FURTHER INFORMATION CONTACT: Clarease E. Mitchell, Esq., Office of the General Counsel, telephone 202-523-0148.

By order of the Commission.

Issued: August 10, 1981.

KENNETH R. MASON,
Secretary.

In the Matter of
CERTAIN LARGE VIDEO MATRIX DISPLAY SYSTEMS AND COMPONENTS THEREOF } Investigation No. 337-TA-75

Notice of Modification of Exclusion Order

AGENCY: U.S. International Trade Commission.

ACTION: Modification of exclusion order.

SUMMARY: On June 19, 1981, the Commission issued an Action and Order and Opinion in the above-captioned investigation. 46 F.R. 32694 (June 24, 1981). The Commission ordered that large video matrix display systems and components thereof, including spare parts, that infringe claims of U.S. Letters Patent Nos. 3,594,762; 3,941,926; or 4,009,335, and are manufactured by SSIH Equipment S.A., of Bienne, Switzerland, or any of its affiliated companies, parents, subsidiaries, or other related business entities, or their successors or assigns, be excluded from entry into the United States for the remaining terms of said patents, except under license.

On July 16 and 17, 1981, the United States District Court for the Eastern District of Michigan held invalid U.S. Letters Patent Nos. 3,941,926 and 4,009,335 in the course of a patent infringement suit. Respondent SSIH Equipment S.A., of Bienne, Switzerland, has asked the Commission *inter alia* to stay the exclusion order in this investigation in its entirety. Motion Docket No. 75-33 (July 29, 1981). In accordance with its policy of deferring to the district courts in such situations, the Commission, on its own motion, is modifying its ex-

clusion order to suspend that portion of the order referring to the '926 and '335 patents, pending resolution of the validity of those patents on appeal.

FOR FURTHER INFORMATION CONTACT: Michael B. Jennison, Esq., Office of the General Counsel, U.S. International Trade Commission, telephone 202–523–0350.

SUPPLEMENTARY INFORMATION: Notice of institution of this investigation was published in the Federal Register. 44 FR 75242 (Dec. 19, 1979). On June 1, 1981, the Commission determined unanimously that there is a violation of section 337 of the Tariff Act of 1930, 19 U.S.C. § 1337, in the unauthorized importation and sale of certain large video matrix display systems and components thereof that infringe the claims of U.S. Letters Patent Nos. 3,594,762; 3,941,926; and 4,009,335, and that the appropriate remedy is an order directing that infringing articles manufactured by SSIH Equipment S.A., of Bienne, Switzerland, be excluded from entry into the United States for the remaining terms of the patents, except under license granted by the patent owner.

In the course of a collateral patent infringement suit, *Stewart-Warner Corp.* v. *City of Pontiac*, No. 79–73536 (E.D. Mich., unpublished order July 16–17, 1981), two of the three patents have been held invalid on the basis of their inventions having been on sale more than one year prior to the date of the application in the Patent Office. The question of the patents' enforceability was not reached by the court. Once a district court finds the two patents invalid, Stewart-Warner Corporation, the patentee and complainant in the Commission's investigation, is estopped from seeking to enforce them. *Blonder-Tongue Laboratories* v. *University of Illinois Foundation*, 402 U.S. 213 (1971). The Commission, therefore, is modifying its order so that it operates only as to the '762 patent, the validity of which was not at issue in the district court suit. The order now directs that articles infringing the '762 patent manufactured by SSIH Equipment S.A., of Bienne, Switzerland, be excluded from entry into the United States for the remaining life of the patent, except under license.

Copies of the Commission's modified Action and Order and all other nonconfidential documents in the record of this investigation are available for inspection during official business hours (8:45 a.m. to 5:15 p.m.) in the Office of the Secretary, U.S. International Trade Commission, 701 E Street NW., Washington, D.C. 20436, telephone 202–523–0161.

By order of the Commission.

Issued: August 10, 1981.

KENNETH R. MASON,
Secretary.

Investigation No. 104–TAA–5

SKI-LIFTS AND PARTS THEREOF FROM ITALY

AGENCY: United States International Trade Commission.

ACTION: Institution of a countervailing duty investigation.

SUMMARY: On November 22, 1968, the U.S. Department of the Treasury (Treasury) published in the Federal Register (33 FR 17291) a notice of final countervailing duty determination and suspension of liquidation of duties stating that it had determined that exports from Italy of ski-lifts and parts thereof benefited from bounties or grants within the meaning of section 303 of the Tariff Act of 1930. Accordingly, imports into the United States of such merchandise from Italy were subject to countervailing duties.

On January 1, 1980, the provisions of the Trade Agreements Act of 1979 became effective, and on January 2, 1980, the authority for administering the countervailing duty statute was transferred from Treasury to the U.S. Department of Commerce (Commerce). On May 13, 1980, Commerce published a notice in the Federal Register (45 FR 31455) of intent to conduct an annual administrative review of all outstanding countervailing duty orders.

On March 28, 1980, the U.S. International Trade Commission received a request from the Delegation of the Commission of the European Communities for an investigation under section 104(b)(1) of the Trade Agreements Act of 1979 with respect to ski-lifts and parts thereof from Italy. In accordance with section 104(b)(3) of the act, Commission notified the Department of Commerce of its receipt of a request for an investigation.

As required by section 751(a)(1) of the Tariff Act of 1930, Commerce has conducted its first annual administrative review of the countervailing duty order on U.S. imports from Italy of ski-lifts and parts thereof. As a result, Commerce, in the Federal Register of June 5, 1981 (46 FR 30161), preliminarily determined that the net subsidy conferred on such merchandise ranges from 15–35 lire per kilogram depending upon the particular component as shown below:

Ski-Lift Components:	*Countervailing duties in lire per kilogram*
Stations	18
Electric motors	35
Gasoline engines	35
Panels	15
Towers	18
Sheaves	20
Chairs	15
Cables	20
Launching	20

Monorail	15
Other metal parts	15
Nonmetallic parts	None

On the basis of that determination, the United States International Trade Commission, pursuant to section 104(b)(2) of the Trade Agreements Act of 1979, is instituting an investigation to determine whether an industry in the United States would be materially injured, would be threatened with material injury, or the establishment of an industry in the United States would be materially retarded, by reason of imports from Italy of the merchandise covered by the countervailing duty order if the order were to be revoked.

Commerce reported that it would issue a final determination in this case after analysis of issues received in written comments or at a hearing. However, no hearing was requested and no written comments had been received by the deadline for their submission to Commerce, July 6, 1981. Commerce's final determination as to the most current level of subsidies will be made as soon as possible.

EFFECTIVE DATE: August 10, 1981.

FOR FURTHER INFORMATION CONTACT: Stephen Miller, Office of Investigations, (202–523–0305), Jim McElroy, Office of Industries, (202–523–0258), or John MacHatton, Office of Investigations, (202–523–0439).

SUPPLEMENTARY INFORMATION:

Public hearing. The Commission will hold a public hearing in connection with this investigation on October 21, 1981, in the Hearing Room of the U.S. International Trade Commission Building, beginning at 10 a.m., e.d.t. Requests to appear at the hearing should be filed in writing with the Secretary of the Commission not later than the close of business (5:15 p.m., e.d.t.) on October 16, 1981. All persons desiring to appear at the hearing and make oral presentations must file prehearing statements and should attend a prehearing conference to be held at 3 p.m., e.d.t., on October 1, 1981, in Room 117 of the U.S. International Trade Commission Building. Prehearing statements must be filed on or before October 16, 1981.

Testimony at the public hearing is governed by section 207.23 of the Commission's Rules of Practice and Procedure (19 CFR 207.23). This rule requires that testimony be limited to a nonconfidential summary and analysis of material contained in prehearing statements and to new information. The Commission will not receive prepared testimony for the public hearing, as would otherwise be provided for by rule 201.12(d). All legal arguments, economic analyses, and factual

best copy available

materials relevant to the public hearing should be included in prehearing statements in accordance with rule 207.22. Posthearing briefs will also be accepted within a time specified at the hearing.

Written submissions. Any person may submit to the Commission on or before October 16, 1981, a written statement of information pertinent to the subject matter of this investigation. A signed original and nineteen true copies of such statements must be submitted in accordance with section 201.8 of the Commission's Rules of Practice and Procedure, 19 CFR section 201.8 (1980). All written submissions, except confidential business data, will be available for public inspection.

Any business information which a submitter desires the Commission to treat as confidential shall be submitted separately and each sheet must be clearly marked at the top "Confidential business data." Confidential submissions must conform with the requirements of section 201.6 of the Rules of Practice and Procedure (19 CFR 201.6).

For further information concerning the conduct of the investigation, hearing procedures, and rules of general application, consult the Commission's Rules of Practice and Procedure, part 207, subparts A and C (19 CFR 207), and part 201, subparts A through E (19 CFR 201).

This notice is published pursuant to section 207.20 of the Commission's Rules of Practice and Procedure (19 CFR 207.20, 44 FR 76458).

By order of the Commission.

Issued: August 10, 1981.

KENNETH R. MASON,
Secretary.

(19 CFR Part 200)

Amendment to Agency Ethics Rules

AGENCY: U.S. International Trade Commission.

ACTION: Final rule.

SUMMARY: In order to promote the orderly and efficient conduct of its investigations, the Commission adopts an amendment to its ethics regulations to allow employees to accept ground transportation in kind, of nominal value, in the course of investigative field trips, from representatives of the industry being investigated.

FOR FURTHER INFORMATION CONTACT: Michael H. Stein, Esq., General Counsel, USITC Ethics Counselor, 701 E Street NW., Washington, D.C. 20436, 202–523–0350.

SUPPLEMENTARY INFORMATION: A notice of proposed rulemaking was published on page 29729 of the Federal Register of June 3, 1981, which invited comments to be received by July 15, 1981. Comments were submitted by one individual and the Office of Government Ethics. The Office of Government Ethics stated its approval of the proposed regulation based upon the Commission's "representation that the transportation is of nominal value and would not be accepted in situations where such acceptance would give the appearance of partiality." The other comment received objected to the creation of exceptions to the rules prohibiting Government employees from soliciting or accepting anything of value from anyone having interests that may be affected by their performance or nonperformance of official duty, including the Commission's existing exception relating to the acceptance of food and other refreshments. The Office of Government Ethics has reviewed the rule change, however, and has found it to be consistent with the provisions of Executive Order 11222, 3 CFR 306 (1965 Compilation).

The U.S. International Trade Commission amends 19 CFR § 200.735–105 to read as follows:

(a) Except as provided in paragraph (b) of this section, no employee may solicit or accept * * * any gift * * * or any other thing of monetary value from any person who:

* * * * * * *

(2) Conducts operations or activities that are being investigated by the Commission * * *.

(b) The prohibitions set forth under paragraph (a) of this section shall not apply to:

* * * * * * *

(2) The acceptance of food and refreshments of nominal value on infrequent occasions in the ordinary course of a luncheon or dinner meeting or other meeting or on a field trip, *and of ground transportation of nominal value in the course of a field trip,* where an employee may properly be in attendance * * *.

By order of the Commission.

Issued: August 6, 1981.

KENNETH R. MASON,
Secretary.

(19 CFR 207.40)

Notice of Request for Public Comment on Termination of Countervailing Duty Investigation Concerning Steel Welded Wire Mesh From Italy

AGENCY: U.S. International Trade Commission.

ACTION: Request for comments on proposed termination of countervailing duty investigation under section 704(a) of the Tariff Act of 1930.

FOR FURTHER INFORMATION CONTACT: Mr. Lynn Featherstone, Office of Investigations, telephone 202–523–0242.

SUPPLEMENTARY INFORMATION: The Trade Agreements Act of 1979, subsection 104(b)(1), requires the Commission in the case of a countervailing duty order issued under section 303 of the Tariff Act of 1930, upon the request of a government or group of exporters of merchandise covered by the order, to conduct an investigation to determine whether an industry in the United States would be materially injured, or threatened with material injury, or whether the establishment of such industry would be materially retarded, if the order were to be revoked. On March 28, 1980, the Commission received a request from the Delegation of the Commission of the European Communities for the review of the countervailing duty order on steel welded wire mesh from Italy (T.D. 68–149).

The Commission received a letter on July 22, 1981 from Hurricane Industries, Inc., the firm which now holds the assets of the original petitioner for the countervailing duty order, stating that it "does not wish to continue in this investigation and hereby withdraws the petition as it applies to our company."

The legislative history of section 704(a) indicates that the Commission should solicit public comment prior to termination of an investigation and approve the termination only if it is in the public interest. In light of the Commission's duty to consider the public interest, the Commission requests written comments from persons concerning the proposed termination of the investigation on steel welded wire mesh from Italy. These written comments must be filed with the Secretary to the Commission no later than 30 days after publication of this notice in the Federal Register.

By order of the Commission.

Issued: August 4, 1981.

KENNETH R. MASON,
Secretary.

(19 CFR 207.40)

Notice of Request for Public Comment on Termination of Countervailing Duty Investigation Concerning Certain Cap Screws From Italy

AGENCY: U.S. International Trade Commission.

ACTION: Request for comments on proposed termination of countervailing duty investigation under section 704(a) of the Tariff Act of 1930.

FOR FURTHER INFORMATION CONTACT: Mr. Lynn Featherstone, Office of Investigations, telephone 202–523–0242.

SUPPLEMENTARY INFORMATION: The Trade Agreements Act of 1979, subsection 104(b)(1), requires the Commission in the case of a countervailing duty order issued under section 303 of the Tariff Act of 1930, upon the request of a government or group of exporters of merchandise covered by the order, to conduct an investigation to determine whether an industry in the United States would be materially injured, or threatened with material injury, or whether the establishment of such industry would be materially retarded, if the order were to be revoked. On March 28, 1980, the Commission received a request from the Delegation of the Commission of the European Communities for the review of the countervailing duty order on certain cap screws from Italy (T.D. 76–225).

The Commission received a letter on July 23, 1981 from Counsel for Russell, Burdsall, and Ward, Inc., the original petitioner for the countervailing duty order, withdrawing its petition for a countervailing duty order on cap screws, one quarter inch in diameter and over, of iron or steel, from Italy.

The legislative history of section 704(a) indicates that the Commission should solicit public comment prior to termination of an investigation and approve the termination only if it is in the public interest. In light of the Commission's duty to consider the public interest, the Commission requests written comments from persons concerning the proposed termination of the investigation on certain cap screws from Italy. These written comments must be filed with the Secretary to the Commission no later than 30 days after publication of this notice in the Federal Register.

By order of the Commission.

Issued: August 4, 1981.

KENNETH R. MASON,
Secretary.

Index

U.S. Customs Service

	T.D. No.
Treasury decisions:	
Bonds:	
Aircraft	81-213
Carriers	81-217
Foreign currencies:	
Daily Rates; August 3-7, 1981	81-215
Variances from quarterly rates; August 3-7, 1981	81-216
Personal declarations and exemptions	81-218
Tariff classification	81-214
Customs Service Decisions:	
Application of coastwise laws	81-185
Classification:	
Artificial or synthetic surface ice skating rinks	81-189
Covered safety pads	81-184
Oversized steel slabs	81-187
Protective leather and rubber footwear	81-183
Sewing machines, etc	81-186
Wire (cut to length)	81-182
Drawback: Imported whiskey	81-190
Value: Appraisement pursuant to sec. 402(b)	81-181
Vessels: Cleaning of a vessel's tanks	81-188

DEPARTMENT OF THE TREASURY
U.S. CUSTOMS SERVICE
WASHINGTON, D.C. 20229

OFFICIAL BUSINESS
PENALTY FOR PRIVATE USE, $300

POSTAGE AND FEES PAID
DEPARTMENT OF THE TREASURY (CUSTOMS)
(TREAS. 552)

15/36

Customs Bulletin

Regulations, Rulings, Decisions, and Notices concerning Customs and related matters

and Decisions

of the United States Court of Customs and Patent Appeals and the United States Court of International Trade

Vol. 15 SEPTEMBER 9, 1981 No. 36

NEWARK PUBLIC LIBRARY
SEP 23 1981
U. S. GOVT. PUBS.
DEPOSITORY 376

This issue contains

T.D. 81-219 Through 81-227
ERRATUM
C.A.D. 1237 and 1268
Slip Op. 81-74
Protest Abstracts P81/140 Through P81/145
Reap. Abstracts R81/286 Through R81/319
International Trade Commission Notices

THE DEPARTMENT OF THE TREASURY
U.S. Customs Service

T 1.11/3:

NOTICE

The abstracts, rulings, and notices which are issued weekly by the U.S. Customs Service are subject to correction for typographical or other printing errors. Users may notify the U.S. Customs Service, Logistics Management Division, Washington, D.C. 20229, of any such errors in order that corrections may be made before the bound volumes are published.

For sale by the Superintendent of Documents, U.S. Government Printing Office, Washington, D.C. 20402. Price: $2.25 (single copy domestic); $2.85 (single copy foreign). Subscription price: $85.00 a year domestic; $106.25 a year foreign.

U.S. Customs Service

Treasury Decisions

(T. D. 81-219)

This notice interprets the decision in C.D. 4769, decided September 27, 1978, affirmed by C.A.D. 1236, decided November 15, 1979, which held that certain fabric was coated or filled for the purposes of Headnote 2(a), Subpart 4C, Schedule 3, TSUS.

DEPARTMENT OF THE TREASURY,
OFFICE OF THE COMMISSIONER OF CUSTOMS,
Washington, D.C., August 19, 1981.

In *H. Rosenthal Co.* v. *United States*, C.D. 4769, decided September 27, 1978, the United States Customs Court held that the fabric from which certain coats were constructed fell within the definition of "coated or filled," in Headnote 2(a), Subpart 4C, Schedule 3, Tariff Schedules of the United States (TSUS). That definition requires that for a fabric to be coated or filled for tariff purposes, the coating or filling must visibly and significantly affect the surface or surfaces thereof, otherwise than by a change in color.

The Customs Court held that it is the *effect imparted* by the coating material, and not the material itself, that must be visible. The Court went on to observe that the fabric before it had the "appearance of stiffness" and concluded, apparently on the basis of that stiffness, the fabric "is coated within the purview of the controlling headnote."

The appellate decision by the Court of Customs and Patent Appeals did not discuss this area except to note that the Customs Court "found the fabric surface to have been visibly affected by the coating."

Stiffness is normally the quality of rigidity which is attributable to an article or fabric. It is not a term which has a clear meaning when used in a description of the surface of that article or fabric. The absence of a specific explanation by the Customs Court in *Rosenthal* of how the surface or surfaces of the fabric in question were visibly affected by the added plastics material is causing confusion and a lack of uniformity in the classification of coated or filled fabrics.

For this reason, Customs is issuing this interpretation of the decision in *Rosenthal.*

Considering the holding in *Rosenthal* and the stated basis for that holding, Customs will consider the surface of a fabric to be visibly affected by a coating or filling if (1) the coating or filling material can be separately distinguished from the fabric by the naked eye; (2) the coating or filling material imparts a shine, luster or glossy appearance, or a dull appearance, that is noticeable by a casual examination; or (3) the coating or filling material has caused the fabric to have a pronounced (obvious) appearance of stiffness. In regard to the appearance of stiffness, the fabric should appear significantly more rigid than that fabric would be if not coated or filled.

All prior rulings by the Customs Service which are in conflict with the preceding paragraph are, pursuant to the authority in section 177.9(d), Customs Regulations (19 CFR 177.9(d)), hereby revoked.

WILLIAM T. ARCHEY,
Acting Commissioner of Customs.

(T.D. 81-220)

Bonds

Approval and discontinuance of bonds on Customs Form 7587 for the control of Instruments of International Traffic of a kind specified in section 10.41a of the Customs Regulations

Bonds on Customs Form 7587 for the control of instruments of international traffic of a kind specified in section 10.41a of the Customs Regulations have been approved or discontinued as shown below. The symbol "D" indicates that the bond previously outstanding has been discontinued on the month, day, and year represented by the figures which follow. "PB" refers to a previous bond, dated as represented by the figures in parentheses immediately following which has been discontinued. If the previous bond was in the name of a different company or if the surety was different, the information is shown in a footnote at the end of the list.

Dated: August 20, 1981.

Name of principal and surety	Date of bond	Date of approval	Filed with district director/area director/amount
Brink's Inc., Thorndal Circle, Darien, CT; Federal Ins. Co. (PB 7/10/75) D 7/10/81 [1]	June 17, 1981	July 10, 1981	New York Seaport $10,000
Gas & Equipment Diving Supplies, Inc., 15200 Intracoastal Dr., New Orleans, LA; American Home Assurance Co.	Mar. 31, 1981	Apr. 30, 1981	Houston, TX $10,000

Name of principal and surety	Date of bond	Date of approval	Filed with district director/area director/amount
Jenaro E. Gonzalez, P.O. Box 10526, Caparra Heights, PR; Puerto Rican-American Ins. Co.	July 13, 1981	July 16, 1981	San Juan, PR $10,000
Great Northern Paper Co., div. of Great Northern Nekoosa Corp., 75 Prospect St., Stamford, CT; Aetna Casualty & Surety Co. (PB 4/1/78) D 3/31/81 [2]	Apr. 1, 1981	Apr. 27, 1981	Portland, ME $10,000
George Moroz, d.b.a.: T & B Services, P.O. Box 5339, San Juan, PR; St. Paul Fire & Marine Ins. Co. (PB 8/5/80) D 7/14/81 [3]	July 10, 1981	July 14, 1981	San Juan, PR $10,000
Netumar International, Inc., 67 Broad St., New York, NY; Federal Ins. Co. D 7/24/81	Mar. 31, 1971	Mar. 31, 1971	New York Seaport $10,000
Matheson Gas—See Searle Medical Products USA Inc.			
Omnium Agencies, Inc., 42 Broadway, New York, NY; Peerless Ins. Co.	Apr. 28, 1981	Apr. 28, 1981	New York Seaport $10,000
Reilly Tar & Chemical Corp., 151 N. Delaware St., Indianapolis, IN; Investors Ins. Co. of America	July 15, 1981	July 16, 1981	New York Seaport $10,000
Riise Shipping Inc., 2208 One Canal Pl., Suite 2208, New Orleans, LA; The Travelers Indemnity Co. (PB 7/5/79) D 6/24/81 [4]	June 24, 1981	June 24, 1981	New Orleans, LA $10,000
S.E.L. Maduro (Florida), Inc., 330 Biscayne Blvd., 10th Floor, Suite 1001, Miami, FL; Peerless Ins. Co.	July 8, 1981	July 31, 1981	Miami, FL $50,000
Searle Medical Products USA Inc., and its div. Matheson Gas, 932 Patterson Plank Rd., East Rutherford, NJ, Peerless Ins. Co. (PB 1/15/80) D 6/25/81 [5]	June 12, 1981	June 25, 1981	New York Seaport $15,000
T & B Services—See George Moroz			
United States Steel International Inc., 600 Grant St., Pittsburgh, PA; Federal Ins. Co.	June 30, 1981	July 8, 1981	New York Seaport $200,000
Williams, Dimond & Co., a Calif. Corp., 100 Oceangate, Suite 40, Long Beach, CA; Aetna Ins. Co. (PB 7/5/76) D 7/5/81 [6]	July 5, 1981	July 27, 1981	Los Angeles, CA $50,000

[1] Surety is American Motorists Ins. Co.
[2] Surety is The Hartford Accident & Indemnity Co.
[3] Principal is George Moroz & Associates.
[4] Surety is St. Paul Fire & Marine Ins. Co.
[5] Surety is Old Republic Ins. Co.
[6] Surety is Hartford Accident & Indemnity Co.

BON-3-10

MARILYN G. MORRISON,
Director,
Carriers, Drawback and Bonds Division.

(T.D. 81-221)

Bonds

Approval of carrier's bond, Customs Form 3587, amendment of T.D. 81-164

T.D. 81-164 relating to the temporary approval of the Carrier's Bond of the following principal is hereby amended as necessary to show that such bond has been permanently approved as noted below.

Dated: August 24, 1981.

	Effective date of permanent authority
Principal: Denton Cartage Co., Inc.	Aug. 12, 1981

GEORGE C. STEUART
(For Marilyn G. Morrison, Director,
Carriers, Drawback and Bonds Division).

(T.D. 81-222)

Synopses of drawback decisions

The following are synopses of drawback rates issued November 22, 1978, to July 10, 1981, inclusive, pursuant to sections 22.1 through 22.5, inclusive, Customs Regulations.

In the synopses below are listed for each drawback rate approved under 19 U.S.C. 1313(b), the name of the company, the specified articles on which drawback is authorized, the merchandise which will be used to manufacture or produce these articles, the factories where the work will be accomplished, the date the statement was signed, the basis for determining payment, the Regional Commissioner to whom the rate was forwarded or issued by, and the date on which it was forwarded or issued.

Dated: August 24, 1981.

DRA-1-09

GEORGE C. STEUART
(For Marilyn G. Morrison, Director,
Carriers, Drawback and Bonds Division).

(A) Company: Altec Corp.

Articles: Loudspeaders, microphones, audio systems and parts of audio systems.

Merchandise: Attenuators, push terminals, diaphragms, terminal plates, cable assemblies, nameplates, screws.

Factories: Oklahoma City, OK; Anaheim, CA.
Statement signed: May 22, 1981.
Basis of claim: Appearing in.
Rate forwarded to Regional Commissioner of Customs: Houston, June 25, 1981.

(B) Company: Amoco Oil Co. (Maryland).
Articles: Petroleum products.
Merchandise: Crude petroleum and petroleum derivatives.
Factories: Casper, WY; Sugar Creek, MO; Wood River, IL; El Dorado, AR; Whiting, IN; Yorktown, VA; Texas City, TX.
Statement signed: December 23, 1980.
Basis of claim: As provided in the drawback rate contained in section 22.6(g–1) of the Customs Regulations.
Rate forwarded to Regional Commissioner of Customs: Chicago, June 5, 1981.
Revokes: T.D. 73–342(1) and T.D. 73–342(2).

(C) Company: Archer-Daniels-Midland Co.
Articles: Crude corn oil; refined corn oil; corn germ meal as corn gluten feed.
Merchandise: Corn germ.
Factory: Decatur, IL.
Statement signed: May 27, 1981.
Basis of claim: Used in, with distribution to the products obtained in accordance with their relative value at the time of separation.
Rate forwarded to Regional Commissioners of Customs: Chicago and New Orleans, June 16, 1981.

(D) Company: Baldor Electric Co.
Articles: Electric motors, grinders and buffers.
Merchandise: Cold rolled steel, steel ball bearings and copper wire.
Factories: Fort Smith, AR; St Louis, MO; Columbus, MS; Westville, OK.
Statement signed: December 17, 1980.
Basis of claim: Appearing in.
Rate forwarded to Regional Commissioner of Customs: New Orleans, June 10, 1981.

(E) Company: Banner Gelatin Products Corp.
Articles: Soft elastic gelatin capsules containing one or more medicaments, vitamins and/or minerals or food supplements.
Merchandise: Vitamin E (d-alpha Tocopheryl acetate N.F.), U.S.P.; Vitamin E (dL-alpha Tocopheryl acetate N.F.), U.S.P.; Gelatin, U.S.P.

Factory: Chatsworth, CA.
Statement signed: May 5, 1981.
Basis of claim: Appearing in.
Rate forwarded to Regional Commissioner of Customs: Los Angeles, June 22, 1981.
Revokes: T.D. 75–245–W and T.D. 79–63–A.

(F) Company: Borg-Warner Corporation, Borg-Warner Chemicals.
Articles: Various products containing Dodecy lphenol.
Merchandise: Propylene Tetramer D; Propylene Tetramer M.
Factory: Morgantown, WV.
Statement signed: November 17, 1980.
Basis of claim: Used in.
Rate forwarded to Regional Commissioners of Customs: New York and Houston, July 10, 1981.

(G) Company: Celanese Corp.
Articles: Acetal copolymer pellet.
Merchandise: Acetal copolymer flake.
Factory: Bishop, TX.
Statement signed: November 12, 1980.
Basis of claim: Used in.
Rate forwarded to Regional Commissioner of Customs: New York, June 22, 1981.

(H) Company: Data General Corp.
Articles: Computer systems, computer subsystems and peripheral computer equipment.
Merchandise: Printed circuit board products.
Factories: Southboro, MA; Westbrook, ME; Cary, NC; Portsmouth, NH; Austin, TX.
Statement signed: March 13, 1981.
Basis of claim: Appearing in.
Rate forwarded to Regional Commissioner of Customs: San Francisco, June 17, 1981.
Revokes: T.D. 81–78–J.

(I) Company: Eastman Kodak Co.
Articles: Coupler 351 AC Intermediate.
Merchandise: Para-chloroaniline; thionyl chloride; gamma butyrolactone.
Factories: Kingsport, TN; Batesville, AR.
Statement signed: May 8, 1981.
Basis of claim: Used in.

Rate forwarded to Regional Commissioner of Customs: Baltimore, June 26, 1981.

(J) Company: Eli Lilly and Co., Inc.
Articles: Erythromycin Estolate and Ilosone products.
Merchandise: Erythromycin Thiocyanate.
Factory: Carolina, PR.
Statement signed: December 15, 1980.
Basis of claim: Appearing in.
Rate forwarded to Regional Commissioner of Customs: Miami, June 25, 1981.

(K) Company: Eli Lilly and Co.
Articles: Herbicides.
Merchandise: P-chlorobenzotrifluoride and Dinitro PCBT.
Factory: Lafayette, IN.
Statement signed: February 2, 1981.
Basis of claim: Used in.
Rate forwarded to Regional Commissioner of Customs: Chicago, June 26, 1981.
Revokes: T.D. 80–243–L.

(L) Company: Eli Lilly Industries, Inc.
Articles: Various product formulations of Cephalexin (Keflex).
Merchandise: Cephalexin for pulvules and suspension.
Factory: Caroline, PR.
Statement signed: December 18, 1980.
Basis of claim: Appearing in.
Rate forwarded to Regional Commissioner of Customs: Miami, June 25, 1981.

(M) Company: Essex Group, Inc.
Articles: Electrical wire and cable.
Merchandise: Copper wirebars and copper cathodes.
Factories: Various factories as listed in manufacturer's statement.
Statement signed: February 27, 1981.
Basis of claim: Appearing in.
Rate forwarded to Regional Commissioner of Customs: Chicago, June 12, 1981.

(N) Company: Evans Cooperage Co., Inc.
Articles: Steel drums and steel drum parts.
Merchandise: Steel sheets and coils.
Factory: Harvey, LA.

Statement signed: June 4, 1981.
Basis of claim: Used in, less valuable waste.
Rate forwarded to Regional Commissioner of Customs: New Orleans, June 16, 1981.
Revokes: T.D. 80–200–H.

(O) Company: Food Producers International, Division of Beatrice Foods Co.
Articles: Ice cream toppings, syrups, liquid hot chocolate drink base and fruit for yogurt.
Merchandise: Refined sugar.
Factory: Minneapolis, MN.
Statement signed: December 18, 1980.
Basis of claim: Appearing in.
Rate issued by Regional Commissioner of Customs in accordance with section 22.4(o)(2): Chicago, February 23, 1981.
Revokes: T.D. 77–29–I to cover successorship from Food Producers, Inc.

(P) Company: Monsanto Co.
Articles: Glyphosate Intermediate, Glyphosate Technical; Isopropylamine salt of n-phosphonomethylglycine, and roundup herbicide.
Merchandise: phosphorous acid.
Factories: Luling, LA; Fayetteville, NC.
Statement signed: March 2, 1981.
Basis of claim: Appearing in.
Rate forwarded to Regional Commissioners of Customs: Chicago and New York, June 22, 1981.

(Q) Company: Osmose Wood Preserving Co. of America, Inc.
Articles: Wood preservatives.
Merchandise: Cupric oxide.
Factory: Woodstock, TN.
Statement signed: March 2, 1981.
Basis of claim: Used in.
Rate issued by Regional Commissioner of Customs in accordance with section 22.4(o)(2): New York, July 2, 1981.
Revokes: T.D. 80–243–Q.

(R) Company: Philips ECG, Inc.
Articles: Cathode ray tubes.
Merchandise: Glass bulbs for use in black/white television picture tubes.
Factory: Ottawa, OH.

Statement signed: March 3, 1981.
Basis of claim: Appearing in.
Rate issued by Regional Commissioner of Customs in accordance with section 22.4(o)(2): New York, July 2, 1981.
Revokes: T.D. 78–258–I to cover successorship from GTE Sylvania Inc.

(S) Company: RCA Corp.
Articles: Television picture tubes (kinescopes).
Merchandise: Glass panels.
Factories: Scranton and Lancaster, PA; Marion, IN.
Statement signed: February 4, 1981.
Basis of claim: Appearing in.
Rate forwarded to Regional Commissioner of Customs: Baltimore, June 5, 1981.

(T) Company: SK & F Lab Co., Chemical Div.
Articles: CET-Isothiourea.
Merchandise: 4(5)-hydroxymethyl-5(4)-methylimidazole hydrochloride (CET/Alcohol).
Factory: Guayama, PR.
Statement signed: August 5, 1980.
Basis of claim: Used in.
Rate forwarded to Regional Commissioner of Customs: Miami, June 17, 1981.

(U) Company: Slush Puppie Corp.
Articles: Slush Puppie Neutral base; Slush Puppie flavors.
Merchandise: Liquid refined sugar.
Factory: Cincinnati, OH.
Statement signed: April 1, 1981.
Basis of claim: Appearing in.
Rate forwarded to Regional Commissioner of Customs: New York, June 17, 1981.

(V) Company: Tenneco Chemicals Inc. (A Tenneco Co.).
Articles: Poly Vinyl Chloride Resin.
Merchandise: Vinyl chloride monomer.
Factory: Pasadena, TX.
Statement signed: April 22, 1981.
Basis of claim: Used in.
Rate forwarded to Regional Commissioner of Customs: New York, June 16, 1981.

(W) Company: Tenneco Chemicals Inc. (A Tenneco Co.).
Articles: Poly Vinyl Chloride; Co polymer resins; dispersion resins; Homopolymer resins.
Merchandise: Vinyl chloride monomer.
Factory: Burlington, NJ.
Statement signed: April 22, 1981.
Basis of claim: Used in.
Rate forwarded to Regional Commissioner of Customs: New York, June 17, 1981.
Revokes: T.D. 67–183–I.

(X) Company: Texfi Industries, Inc.
Articles: Textured polyester yarn, dyed and undyed; doubleknit and woven polyester fabrics.
Merchandise: Undyed textured polyester filament yarn; undyed untextured (raw) polyester filament yarn.
Factories: Various factories as listed in manufacturer's statement.
Statement signed: April 28, 1980.
Basis of claim: Appearing in.
Rate forwarded to Regional Commissioner of Customs: Baltimore, June 11, 1981.
Revokes: T.D. 75–208–I.

(Y) Company: Tropical Products, Inc.
Articles: Orange juice from concentrate; frozen concentrated orange juice; concentrated orange juice for manufacturing.
Merchandise: Concentrated orange juice 40–65 Brix.
Factories: Brandenton and Fort Pierce, FL.
Statement signed: August 16, 1978.
Basis of claim: Used in.
Rate forwarded to Regional Commissioner of Customs: Miami, November 22, 1978.
Revokes: T.D. 78–397–X.

(Z) Company: Van Leer Manufacturing Corp.
Articles: Ice cream bar coatings.
Merchandise: Granular refined sugar.
Factory: Jersey City, N.J.
Statement signed: February 12, 1981.
Basis of claim: Appearing in.
Rate forwarded to Regional Commissioner of Customs: New York, June 22, 1981.

(T.D. 81-223)

Cotton Textile Products—Restriction on Entry

Restriction on entry of cotton textile products manufactured or produced in the Philippines

There is published below a directive of July 9, 1981, received by the Commissioner of Customs from the Chairman, Committee for the Implementation of Textile Agreements, concerning restriction on entry of cotton textile products in category 337 manufactured or produced in the Philippines. This directive amends, but does not cancel, that Committee's directive of December 19, 1980 (T.D. 81-135).

This directive was published in the Federal Register on July 15, 1981 (46 FR 36725), by the Committee.

(QUO-2-1)

Dated: August 25, 1981.

WILLIAM D. SLYNE
(For Richard R. Rosettie, Acting Director,
Duty Assessment Division).

U.S. DEPARTMENT OF COMMERCE,
INTERNATIONAL TRADE ADMINISTRATION,
Washington, D.C., July 9, 1981.

Committee for the Implementation of Textile Agreements

COMMISSIONER OF CUSTOMS,
Department of the Treasury,
Washington, D.C.

DEAR MR. COMMISSIONER: This directive further amends, but does not cancel, the directive issued to you on December 19, 1980 by the Chairman, Committee for the Implementation of Textile Agreements, concerning imports into the United States of certain cotton, wool and man-made fiber textile products, produced or manufactured in the Philippines.

Under the terms of the Arrangement Regarding International Trade in Textiles done at Geneva on December 20, 1973, as extended on December 15, 1977; pursuant to the Bilateral Cotton, Wool and Man-Made Fiber Textile Agreement of August 22 and 24, 1978, as amended, between the Governments of the United States and the

Republic of the Philippines; and in accordance with the provisions of Executive Order 11651 of March 3, 1972, as amended by Executive Order 11951 of January 6, 1977, you are directed to prohibit, effective on July 16, 1981, and for the twelve-month period beginning on January 1, 1981 and extending through December 31, 1981, entry into the United States for consumption and withdrawal from warehouse for consumption of cotton textile products in Category 337pt.,[1] produced or manufactured in the Philippines, in excess of 37,560 dozen:[2]

Textile products in Category 337pt., which have been exported to the United States prior to January 1, 1981 shall not be subject to this directive.

Textile products in Category 337pt. which have been released from the custody of the U.S. Customs Service under the provisions of 19 U.S.C. 1448(b) or 1484(a)(1)(A) prior to the effective date of this directive shall not be denied entry under this directive.

A detailed description of the textile categories in terms of T.S.U.S.A. numbers was published in the FEDERAL REGISTER on February 28, 1980 (45 F.R. 13172), as amended on April 23, 1980 (45 F.R. 27463), August 12, 1980 (45 F.R. 53506) December 24, 1980 (45 F.R. 85142) and May 5, 1981 (46 F.R. 25121).

In carrying out the above directions, the Commissioner of Customs should construe entry into the United States for consumption to include entry for consumption into the Commonwealth of Puerto Rico.

The action taken with respect to the Government of the Republic of the Philippines and with respect to imports of cotton textile products from the Philippines has been determined by the Committee for the Implementation of Textile Agreements to involve foreign affairs functions of the United States. Therefore, these directions to the Commissioner of Customs, which are necessary for the implementation of such actions, fall within the foreign affairs exception to the rule-making provisions of 5 U.S.C. 553. This letter will be published in the Federal Register.

Sincerely,

PAUL T. O'DAY,
Chairman, Committee for the
Implementation of Textile Agreements.

---

[1] In Category 337, all T.S.U.S.A. numbers except 382.0020, 382.0073, and 382.3329.

[2] The level of restraint has not been adjusted to reflect any imports after December 31, 1980. Charges for the period, January-April 1981, have amounted to 16,300 dozen.

(T.D. 81-224)

Cotton Textile Products—Restriction on Entry

Restriction on entry of cotton textile products manufactured or produced in Pakistan

There are published below directives of July 20 and August 11, 1981, received by the Commissioner of Customs from the Chairman, Committee for the Implementation of Textile Agreements, concerning restriction on entry of cotton textile products in certain categories manufactured or produced in Pakistan. The directives amend, but do not cancel, that Committee's directive of December 19, 1980 (T.D. 81-153).

The directives were published in the Federal Register on July 24 and August 14, 1981 (46 FR 38117 and 46 FR 41129), by the Committee.

(QUO-2-1)

Dated: August 25, 1981.

WILLIAM D. SLYNE
(For Richard R. Rosettie, Acting Director,
Duty Assessment Division).

U.S. DEPARTMENT OF COMMERCE,
INTERNATIONAL TRADE ADMINISTRATION,
Washington, D.C., July 20, 1981.

Committee for the Implementation of Textile Agreements

COMMISSIONER OF CUSTOMS,
Department of the Treasury,
Washington, D.C.

DEAR MR. COMMISSIONER: This directive amends, but does not cancel, the directive issued to you on December 19, 1980 by the Chairman, Committee for the Implementation of Textile Agreements, concerning imports into the United States of certain textile products, produced or manufactured in *Pakistan.*

Effective on July 20, 1981, you are directed to amend eighteen-month levels of restraint established in the directive of December 19, 1980 for Categories 320, 336, 340, and 342 to the following amounts:

Category	*Amended 18-mo level of restraint*
320	10,000,000 square yards
336	33,113 dozen
340	70,833 dozen
342	101,124 dozen

The actions taken with respect to the Government of Pakistan and with respect to imports of cotton textile products from Pakistan have been determined by the Committee for the Implementation of Textile Agreements to involve foreign affairs functions of the United States. Therefore, the directions to the Commissioner of Customs, which are necessary for the implementation of such actions, fall within the foreign affairs exception to the rule-making provisions of 5 U.S.C. 553. This letter will be published in the Federal Register.

Sincerely,

ARTHUR GAREL,
Acting Chairman, Committee for the Implementation of Textile Agreements.

U.S. DEPARTMENT OF COMMERCE,
INTERNATIONAL TRADE ADMINISTRATION
Washington, D.C., August 11, 1981.

Committee for the Implementation of Textile Agreements

COMMISSIONER OF CUSTOMS,
Department of the Treasury,
Washington, D.C.

DEAR MR. COMMISSIONER: On December 19, 1980, the Chairman, Committee for the Implementation of Textile Agreements, directed you to prohibit entry for consumption, or withdrawal from warehouse for consumption, during the eighteen-month period beginning on January 1, 1981 and extending through June 30, 1982 of cotton textile products in certain specified categories, produced or manufactured in Pakistan, in excess of designated levels of restraint. The Chairman further advised you that the levels of restraint are subject to adjustment.[1]

Under the terms of the Arrangement Regarding International Trade in Textiles done at Geneva on December 20, 1973, as extended on December 15, 1977; pursuant to the Bilateral Cotton Textile Agreement of January 4 and 9, 1978, as amended, between the Governments of the United States and Pakistan; and in accordance with the provisions of Executive Order 11651 of March 3, 1972,

---

[1] The term "adjustment" refers to those provisions of the Bilateral Cotton, Wool and Man-Made Fiber Textile Agreement of January 4 and 9, 1978, as amended, between the Governments of the United States and Pakistan, which provide, in part, that (1) within the aggregate and group limits, specific levels of restraint may be exceeded by designated percentages; (2) these same levels may be increased for carryover and carryforward; and, (3) administrative arrangements or adjustments may be made to resolve minor problems arising in the implementation of the agreement.

as amended by Executive Order 11951 of January 6, 1977, you are directed to increase, effective on August 12, 1981, the eighteen-month level of restraint established for cotton textile products in Category 363 to 29,052,632 numbers.[2]

The actions taken with respect to the Government of Pakistan and with respect to imports of cotton textile products from Pakistan have been determined by the Committee for the Implementation of Textile Agreements to involve foreign affairs functions of the United States. Therefore, these directions to the Commissioner of Customs, which are necessary for the implementation of such actions, fall within the foreign affairs exception to the rule-making provisions of 5 U.S.C. 553. This letter will be published in the Federal Register.

Sincerely,

PAUL T. O'DAY,
Chairman, Committee for the
Implementation of Textile Agreements.

(T.D. 81-225)

Cotton, Wool, Manmade Fiber Textile Products—Restriction on Entry

Restriction on entry of cotton, wool, manmade fiber textile products manufactured or produced in Colombia

There is published below a directive of June 29, 1981, received by the Commissioner of Customs from the Chairman, Committee for the Implementation of Textile Agreements, concerning restriction on entry of cotton, wool, manmade fiber textile products in certain categories manufactured or produced in Colombia.

This directive was published in the Federal Register on July 1, 1981 (46 FR 34361), by the Committee.

(QUO-2-1)

Dated: August 25, 1981.

WILLIAM D. SLYNE,
(For Richard R. Rosettie, Acting Director,
Duty Assessment Division).

---

[2] The level of restraint has not been adjusted to reflect any imports after December 31, 1980.

352-987 0 - 81 - 3

U.S. DEPARTMENT OF COMMERCE,
INTERNATIONAL TRADE ADMINISTRATION,
Washington, D.C., June 29, 1981.

Committee for the Implementation of Textile Agreements

COMMISSIONER OF CUSTOMS,
Department of the Treasury,
Washington, D.C.

DEAR MR. COMMISSIONER: Under the terms of the Arrangement Regarding International Trade in Textiles done at Geneva on December 20, 1973, as extended on December 14, 1977; pursuant to the Bilateral Cotton, Wool, and Man-Made Textile Agreement of August 3, 1978, as amended, between the Governments of the United States and Colombia; and in accordance with the provisions of Executive Order 11651 of March 3, 1972, as amended by Executive Order 11951 of January 6, 1977, you are directed to prohibit, effective on July 1, 1981 and for the twelve-month period extending through June 30, 1982, entry into the United States for consumption and withdrawal from warehouse for consumption of cotton, wool, and man-made fiber textile products, exported from Colobia in the following categories, in excess of the indicated twelve-month levels of restraint:

Category	*12-mo level of restraint*	
310	3,200,000	square yards
320	7,000,000	square yards
435	5,556	dozen
444	4,345	dozen
641	152,074	dozen

In carrying out this directive, entries of cotton, wool, and man-made fiber textile products in the foregoing categories, except Category 310, produced or manufactured in Colombia, which have been exported to the United States on and after July 1, 1980 and extending through June 30, 1981, shall, to the extent of any unfilled balances, be charged against the levels of restraint established for such goods during that twelve-month period. In the event the levels of restraint established for that period have been exhausted by previous entries, such goods shall be subject to the levels set forth in this letter. Cotton textile products in Category 310, which have been exported prior to July 1, 1981 shall not be subject to this directive.

The levels of restraint set forth above are subject to adjustment in the future according to the provisions of the bilateral agreement of August 3, 1978, as amended, between the Governments of the United States and Colombia, which provide, in part, that: (1) with the ap-

plicable group limits of the agreement, specific levels of restraint may be exceeded by designated percentages; (2) these same levels may also be increased for carryover and carryforward up to 11 percent of the applicable category limit; (3) certain consultation levels may be increased within the applicable group limits upon agreement between the two governments; and (4) administrative arrangements or adjustments may be made to resolve minor problems arising in the implementation of the agreement. Any appropriate adjustment under the provisions of the bilateral agreement referred to above be made to you by letter.

A detailed description of the textile categories in terms of T.S.U.S.A. numbers was published in the Federal Register on February 28, 1980 (45 FR 13172), as amended on April 23, 1980 (45 FR 27463), August 12, 1980 (45 FR 53506) December 24, 1980 (45 FR 85142) and May 5, 1981 (46 FR 25121).

In carrying out the above directions, the Commissioner of Customs should construe entry into the United States for consumption to include entry for consumption into the Commonwealth of Puerto Rico.

The actions taken with respect to the Government of Colombia and with respect to imports of cotton, wool, and man-made fiber textile products from Colombia have been determined by the Committee for the Implementation of Textile Agreements to involve foreign affairs functions of the United States. Therefore, these directions to the Commissioner of Customs, which are necessary for the implementation of such actions, fall within the foreign affairs exception to the rule-making provisions of 5 U.S.C. 553. This letter will be published in the Federal Register.

Sincerely,

PAUL T. O'DAY,
Chairman, Committee for the
Implementation of Textile Agreements.

(T.D. 81-226)

Manmade Fiber Textile Products—Restriction on Entry

Restriction on entry of manmade fiber textile products manufactured or produced in India

There is published below a directive of July 9, 1981, received by the Commissioner of Customs from the Chairman, Committee for the Implementation of Textile Agreements, concerning restriction on entry of manmade fiber textile products in category 666 manu-

factured or produced in India. This directive amends, but does not cancel, that Committee's directive of December 16 1980, (T.D. 81-132).

This directive was published in the Federal Register on July 15, 1981 (46 FR 36725), by the Committee.

(QUO-2-1)

Dated: August 25, 1981.

WILLIAM D. SLYNE,
(For Richard R. Rosettie, Acting Director,
Duty Assessment Division).

U.S. DEPARTMENT OF COMMERCE,
INTERNATIONAL TRADE ADMINISTRATION,
Washington, D.C., July 9, 1981.

Committee for the Implementation of Textile Agreements

COMMISSIONER OF CUSTOMS,
Department of the Treasury,
Washington, D.C.

DEAR MR. COMMISSIONER: This directive amends, but does not cancel, the directive of December 16, 1980, from the Chairman of the Committee for the Implementation of Textile Agreements which directed you to prohibit entry during the twelve-month period which began on January 1, 1981 and extends through December 31, 1981 of cotton, wool and man-made fiber textile products in certain specified categories, produced or manufactured in India, in excess of designated levels of restraint.

Under the terms of the Arrangement Regarding International Trade in Textiles done at Geneva on December 20, 1973, as extended on December 15, 1977; pursuant to the Bilateral Cotton, Wool and Man-Made Fiber Textile Agreement of December 30, 1977, as amended, between the Governments of the United States and India; and in accordance with the provisions of Executive Order 11651 of March 3, 1972, as amended by Executive Order 11951 of January 6, 1977, you are directed to prohibit, effective on July 9, 1981 and for the twelve-month period beginning on January 1, 1981 and extending through December 31, 1981, entry into the United States for consumption and withdrawal from warehouse for consumption of man-made fiber textile products in Category 666, produced or manufactured in India, in excess of 1,025,641 pounds.[1]

---

[1] The level of restraint has not been adjusted to reflect any entries after December 31, 1981.

The actions taken with respect to the Government of India and with respect to imports of man-made fiber textile products from India have been determined by the Committee for the Implementation of Textile Agreements to involve foreign affairs functions of the United States. Therefore, these directions to the Commissioner of Customs, which are necessary for the implementation of such actions, fall within the foreign affairs exception to the rule-making provisions of 5 U.S.C. 553. This letter will be published in the Federal Register.

Sincerely,

PAUL T. O'DAY,
Chairman, Committee for the Implementation of Textile Agreements.

(T.D. 81-227)

United States-Canada Albacore Tuna Treaty

Published below is the text of the "Treaty Between the Government of the United States of America and the Government of Canada on Pacific Coast Albacore Tuna Vessels and Port Privileges" entered into force in Ottawa at 2:25 p.m., Eastern Daylight Time, on July 29, 1981. The treaty is an exception to the Nicholson Act, codified as title 46, United States Code, section 251(a), second sentence. Among other things, the treaty permits Canadian fishing vessels to land their catches of albacore tuna in the ports of the United States named in Annex B. The tuna may be landed only for the purposes described in the treaty.

TREATY BETWEEN THE GOVERNMENT OF THE UNITED STATES OF AMERICA AND THE GOVERNMENT OF CANADA ON PACIFIC COAST ALBACORE TUNA VESSELS AND PORT PRIVILEGES

The Government of the United States of America and the Government of Canada,

Desiring to cooperate in matters concerning the albacore tuna fishery off the Pacific Coast of the United States and Canada,

Desiring to benefit the fishing industries involved in that fishery, and

Taking into account the deliberations of the Third United Nations Conference on the Law of the Sea in the field of fisheries,

Have agreed as follows:

ARTICLE I

Without prejudice to the respective juridical positions of both Parties regarding highly migratory species of tuna, each Party shall:

(*a*) ensure that all its vessels engaged in fishing for albacore tuna in waters under the fisheries jurisdiction of the other Party shall do so in accordance with this Treaty;

(*b*) permit fishing vessels of the other Party to fish for albacore tuna in waters under its fisheries jurisdiction beyond twelve nautical miles of the baselines from which the territorial sea is measured, in accordance with Annex "A" to this Treaty and subject to other applicable laws and regulations.

ARTICLE II

Vessels of the United States of America fishing pursuant to this Treaty shall be authorized to enter the Canadian ports listed in Annex "B" to this Treaty and to use Canadian facilities and services, subject to compliance with applicable customs, navigation, safety, environmental and other laws and regulations pertaining to port privileges, and payment of applicable albacore tuna landing fees provided that such fees do not discriminate according to nationality, for the following purposes:

(1) to land their catches of albacore tuna without the payment of duties and

(*a*) trans-ship them in bond under customs supervision to any port of the United States of America; or

(*b*) sell them for export in bond; or

(*c*) sell them locally on payment of the applicable customs duty; and

(2) to obtain fuel, supplies, repairs and equipment on the same basis as albacore tuna vessels of the other Party.

ARTICLE III

Canadian vessels fishing pursuant to this Treaty shall be authorized to enter the United States ports listed in Annex "B" to this Treaty and to use United States facilities and services, subject to compliance with applicable customs, navigation, safety, environmental, and other laws and regulations pertaining to port privileges, and payment of applicable albacore tuna landing fees provided that such fees do not discriminate according to nationality, for the following purposes:

(1) to land their catches of albacore tuna without the payment of duties and

(*a*) trans-ship them in bond under customs supervision to any port of Canada; or

(*b*) sell them for export in bond; or

(*c*) sell them locally on payment of the applicable customs duty; and

(2) to obtain fuel, supplies, repairs and equipment on the same basis as albacore tuna vessels of the other Party.

ARTICLE IV

Neither Party shall, pursuant to its fisheries legislation, prohibit the importation into its territory of Pacific albacore tuna

and albacore tuna products from the other Party as a consequence of a dispute arising in other fisheries.

ARTICLE V

1. Vessels of each Party which are not in compliance with this Treaty are subject to enforcement action by the other Party when engaged in fishing for Pacific albacore tuna in waters under the fisheries jurisdiction of the other Party.

2. Arrested vessels and their crews shall be promptly released, subject to such reasonable bond or other security as may be determined by the court.

3. Enforcement actions under this Treaty shall not include imprisonment.

4. In the case of seizure and arrest of a vessel by the authorities of one Party, notification shall be given promptly through diplomatic or consular channels informing the other Party of the action taken and of any penalties subsequently imposed.

ARTICLE VI

1. Either Party may at any time request consultations on the interpretation or application of this Treaty. Such consultations should commence as soon as practicable but in any case not later than sixty days from the date of receipt of the request for consultations, unless otherwise agreed by the Parties.

2. In the event of a dispute arising between the Parties concerning the interpretation or application of this Treaty, the Parties shall consult with a view to resolving the dispute by negotiation.

ARTICLE VII

The Annexes may be amended by the President of the United States and the Government of Canada through an Exchange of Notes.

ARTICLE VIII

This Treaty shall enter into force upon the exchange of instruments of ratification at Ottawa. After two years from the date of entry into force, either Party may give written notice to the other Party to terminate this Treaty. The Treaty shall terminate on December 31 of the calendar year following that in which such notice was received by the other Party.

In witness whereof, the undersigned, being duly authorized by their respective Governments, have signed this Treaty.

Done at Washington in duplicate, in the English and French languages, both versions being equally authentic, this Twenty-sixth day of May, 1981.

For the Government of the United States of America:

WILLIAM CLARK

For the Government of Canada:

PETER TOWE

ANNEX A

1. a. Each Party agrees to provide annually to the other Party a list of its fishing vessels which propose to fish albacore tuna off the coast of the other Party. The list will include (1) vessel name, (2) home port, (3) radio call sign, (4) fishing vessel registration number, and (5) captain or operator's name, if known.

b. Each Party may provide the other Party with additions or deletions to its list at any time.

c. As soon as possible after receipt, and subject to paragraph 1(d) below, the receiving Party shall satify itself that the list received meets the criteria of paragraph 1(a) and shall so inform the other Party in order to enable the albacore fishery to proceed pursuant to this Treaty.

d. Should, due to serious or repeated fisheries violations or offenses, one Party object to the inclusion of a particular vessel on the list of the other Party, the two Parties shall consult. In this event, actions pursuant to paragraph 1(c), with regard to other vessels shall not be delayed. Following consultations, each Party shall notify its vessels which both Parties agree shall not be included on the lists referred to in paragraph 1(c).

2. If required by either Party, each vessel shall, upon entering and at least 24 hours prior to leaving the fishing zone of such Party, so inform the appropriate authorities and provide the vessel name, radio call sign and captain or operator's name.

3. When in the fishing zone of the other Party, each vessel shall have its name and radio call sign prominently displayed where they will be clearly visible both from the air and from a surface vessel.

4. Vessels of both Parties shall keep accurate log records while fishing pursuant to this Treaty.

5. In order that better information on the stocks of albacore tuna which migrate off the west coasts of the United States and Canada may be obtained, each vessel engaged in fishing pursuant to this Treaty shall provide to its government statistics and other scientific information on its operations in the fishing zone of the other Party. Each Party shall provide to the other Party twice yearly such information and in particular the amount (number and weight) of albacore tuna caught by its vessels in waters under the fisheries jurisdiction of the other Party. Other specific information to be provided, as well as the forms and procedures for providing such information, shall be agreed upon by the two Parties.

ANNEX B

1. Fishing vessels of the United States of America shall, pursuant to Article II, be authorized to enter the following ports located in Canada:

Port Hardy.
Prince Rupert.
Victoria.
Ucluelet.

2. Canadian fishing vessels shall, pursuant to Article III, be authorized to enter the following ports located in the United States of America:

Astoria.
Bellingham.
Coos Bay.
Crescent City.

ERRATUM

In CUSTOMS BULLETIN, Volume 15, No. 31, in T.D. 81–191, on page 10, delete the discontinuance entry for Alto's Express, Inc. Their 1979 bond is to remain in effect.

Decisions of the United States Court of Customs and Patent Appeals

Appeal No. 81-25

ASG INDUSTRIES, INC., ET AL. *v.* UNITED STATES

1. ORDER OF COURT OF INTERNATIONAL TRADE VACATED AND CASE REMANDED.

The order of the Court of International Trade dated April 24, 1981, which granted the government's motion to dismiss and remanded the case to the Secretary of Commerce is *vacated* and the case *remanded* to that court for further proceedings consistent with the opinion. Appellants' motion for an injunction to stay all proceedings is *dismissed* as moot. The government's cross-motion to dismiss the appeal or, in the alternative, for summary affirmance of the order of the Court of International Trade, is *denied*.

Before MARKEY, Chief Judge, RICH, BALDWIN, MILLER, and NIES, Associate Judges.

RICH, *Judge*.

THE APPEAL

[1] This appeal is from an "order" of The United States Court of International Trade (formerly the United States Customs Court), dated April 24, 1981, which was accompanied by a memorandum of even date. The order was entered after a hearing, both parties filing briefs, on March 18, 1981, on remand of the case from this court pursuant to its decision in *ASG Industries, Inc.* v. *United States*, 67 CCPA —, C.A.D. 1237, 610 F. 2d 770 (1979), which will be referred to as the "first appeal." The hearing was limited to consideration of the Government's motion to dismiss.

The basic questions involved in the case are (1) whether the West German Government provided a bounty or grant to German manufacturers of float glass imported into the United States, so as to give rise to a countervailing duty requested by appellants who are domestic manufacturers and wholesalers of float glass, and (2) the net amount

of such bounty or grant. On the first appeal, this court held that certain benefits bestowed by West Germany upon float glass manufacturers *were* bounties or grants. However, the *net amount* of the bounty or grant, within the meaning of 19 USC 1303 (a) (1), upon which a countervailing duty, if any, would be based, had not been determined.

After much discussion in the opinion with respect to the proper procedure for determining the net amount of the bounty or grant, this court concluded

> * * * that a trial *de novo* is indicated in this case so that the merits of the issue of the amount of the net bounty herein involved can be *fully developed*. [Emphasis ours.]

This court therefore ruled as follows:

> In view of all the foregoing, we *reverse* the judgment of the Customs Court [which had affirmed an administrative decision that there was no bounty or grant] and *remand* for further proceedings consistent with this opinion.

In the proceedings on remand, appellants and the Government took different views as to the interpretation of this court's opinion and of what should be done on remand. The Government position was that the *only* question to be decided was whether there were any "offsets" to the gross amounts of the West German Government's payments to the German manufacturers, the amount of which payments appears not to be in dispute. Government counsel stated that the Government had no evidence of any offsets and would not attempt to prove any, wherefore there was nothing for the court to decide, and moved below to dismiss the case, requesting, however, that the court do so "with a judgment ordering the administering authority of the countervailing duty law (19 U.S.C. §1303) to determine, as certain or estimate the net amount of the bounties or grants * * * and to levy a countervailing duty equal to such net bounty or grant on such importation of float glass."

In arguing against the Government's aforesaid motion to dismiss, appellants' counsel contended that the government position was not in harmony with this court's remand for a trial *de novo* in C.A.D. 1237, the first appeal, asked denial of the motion to dismiss, and made two suggestions. The first was that the Court of International Trade should retain its control over the determination of net bounty and "remand" the case to the Commerce Department (to which jurisdiction had been transferred[1] from Treasury) to determine or estimate the net bounties or grants consistently with C.A.D. 1237 *and report back* so that the court could consider the findings and issue its final

[1] The effective date of that transfer was January 2, 1980. *See* 44 Fed. Reg. 69273 (1979).

order. The second was that the court receive expert testimony and or supplemental briefing before determining the net amount. It submitted a proposed order embodying only the first suggestion.

In its April 24, 1981, order, here on appeal, the court wholly adopted the Government's position that it had nothing to decide, granted the motion to dismiss and, at the same time, "remanded" the case to the Secretary of Commerce, directing that he or his delegate (1) ascertain and determine or estimate the net amount of the bounties or grants "without deducting any offsets" and (2) direct the Customs officers to assess countervailing duties "in the net amount equal to said bounties or grants." Appellants' present appeal from that order was filed in this court on June 22, 1981.

THE MOTIONS

The case is brought up at this time by three motions.

(1) June 29, 1981, appellants filed a "Motion for an Injunction Pending Appeal." They ask this court

> * * * for an order enjoining, pending the final resolution of this appeal, the Secretary of Commerce and his successors, agents, and assigns from issuing or publishing any countervailing duty order with respect to float glass from the Federal Republic of Germany or from complying with the directives contained in the order of the Court of International Trade of April 24, 1981 (Slip Op. 81–34).

(2) July 13, 1981, the Government, appellee, along with an opposition to appellants' motion, countered with a motion to dismiss the present appeal "on the grounds that appellants obtained a favorable judgment from the court below and thus are not aggrieved parties."

(3) In the alternative, the Government "requested"

> * * * that the court summarily affirm the decision and judgment of the Court of International Trade, pursuant to Rule 5.12 [CCPA Rules], as this case is of such a character as not to require oral argument or briefs and may be decided on the record.

We treat that as a motion for a summary affirmance of the order now on appeal.

DECISION

In the course of arguing these three motions through extensive briefs and attached appendices, the parties have, inevitably, argued the merits of the underlying appeal, fully expounding their views, pro and con, on the correctness of the action taken on remand and complained of by appellants. We see no reason to review these argu-

ments again at a later date, which course would delay final resolution of this litigation by at least several months. In the interests of justice, of judicial economy, and especially of the expeditious disposition of litigation, we accept the Government's invitation to summarily decide the appeal [2] at the same time that we decide the motions. For the further reasons hereinafter set forth, our disposition is as follows:

1. The appealed order of April 24, 1981, is *vacated.*
2. Appellants' motion for an injunction is *dismissed* as moot.
3. The Government's cross-motion to dismiss the appeal is *denied.*
4. The Government's request for summary affirmance of the appealed order is *denied.*

OPINION

I

With respect to the order dismissing the action and "remanding" this matter to the Secretary of Commerce,[3] we are vacating it because it is not in accord with this court's decision and remand of November 29, 1979, C.A.D. 1237, to conduct a trial *de novo* "so that the merits of the issue of the amount of the net bounty herein involved can be fully developed." It was this court's intention that such full development of the net bounty issue should take place in the court, not that it be turned over with no restraint whatsoever to the administering authority, now the Commerce Department.

We are aware that with respect to cases arising after January 1, 1980, review of countervailing duties is not to be by trial *de novo* but, as the Government recognizes, this case is to be governed by the "old law" since it is a case commenced prior to January 1, 1980.

We have to disagree with the Government's interpretation of this court's opinion that the only matter to be considered on remand was whether or not there were "offsets" to be deducted from the gross amount of the bounties or grants. Since the appealed action was based on the Government's erroneous construction, it was not in accord with the remand. We point out that the opinion, although it discussed deductions, said that "all relevant circumstances are to be taken into account." Appellants have indicated specific matters they wish to have taken into account in a judicial proceeding.

The purpose of our present action in vacating the appealed order is to give appellants the trial *de novo* which this court decreed by the

[2] Under CCPA Rule 5.12 this court may, *sua sponte*, conclude that a case is of such character as not to require oral argument or briefs and decide it on the record. Here, however, we have briefs fully discussing the issues. *See* 28 U.S.C. 2106, 2601(c) and *Clayton Chemical & Packaging Co.* v. *United States*, 383 U.S. 821 (1966).

[3] This case was originally brought to review a decision of the Secretary of the Treasury whose jurisdiction has been transferred to the Secretary of Commerce by P.L. 96-39 and E.O. 12188, 45 F R 989 (1980).

remand, which was frustrated by the granting of the Government's motion to dismiss. When the argument was presented on that motion, appellants' counsel was asked by the court, during oral argument, to file a memorandum "as to the applicability of section 516(d) as against 751." Such a memorandum was filed in which counsel expressed (page 4, footnote 2 and related text) his views of what, as a practical matter, the court could do in determining the net amount of bounty or grant. His concerns appear to reside in the "quantification methodology" used to determine net bounty or grant and to be of an accounting nature. Appellants are entitled, in our view, to their day in court to present their case, whatever it may be, on what the net bounty or grant is or, at least, on the method by which it is to be determined, and to a decision thereon by the Court of International Trade. The only matter considered and ruled on in the March 18, 1981, hearing on remand, as shown by the stenographic transcript of the proceeding and the briefs we have before us, was the Government's motion to dismiss, which was granted. Appellants have not had the opportunity, which this court intended them to have, to present their case. If they have any evidence to produce in support of their contentions, they are entitled to introduce it.

II

Appellants' motion in this court for an injunction to stay all proceedings pursuant to the order of April 24, 1981, is rendered moot by our present vacating of that order. Appellants, in asking for the stay, assumed we would not decide their appeal from that order until some later date and that the order would, meanwhile, remain in effect. Since we are deciding the appeal now, the reason for the motion has been removed. We assume that no administrative action will be taken to determine net bounty or grant while that question remains *sub judice*.

Appellants' brief on this motion (footnote 1) advises that administrative action is suspended, until decision of this motion, by agreement of counsel. Since the vacating of the order removes the authority for action, the matter is no longer a matter for counsel to decide.

III

The Government's cross-motion for dismissal of the appeal, which appeal we are hereby deciding, is denied as lacking merit. The Court of International Trade did not carry out this court's remand for a trial *de novo* and dismissed appellants' case. Appellants are, therefore, aggrieved parties having a right to appeal.

IV

As the Government's motion papers remind us, this case is entitled to a preference under 28 U.S.C. 2602(a).[4] Summary judgment under all the circumstances of this case, where all the issues involved in the appeal have been fully aired in the motion papers, is most appropriate. We disagree with the Government, however, for reasons stated above, that the appealed orders should be affirmed. The motion for a summary affirmance is therefore denied.

The order of the Court of International Trade is *vacated* and the case is *remanded* for further proceedings consistent herewith.

(C.A.D. 1268)

No. 80–38, FARRELL LINES, INC. AS SUCCESSOR TO AMERICAN EXPORT LINES, INC. *v.* THE UNITED STATES

1. APPEAL FROM DISMISSAL FOR LACK OF JURISDICTION—REVERSED AND REMANDED.

Appeal from judgment of the United States Customs Court (hereinafter referred to as the Court of International Trade) in *American Export Lines, Inc.* v. *United States*, — Cust. Ct. —, C.D. 4864 (1980), dismissing for lack of jurisdiction an action by American Export Lines, Inc., to recover duties assessed on repairs made overseas to its ship, the C.V. LIGHTNING. Reversed and remanded.

2. WHERE CONFUSION OVER METHOD OF OBTAINING ADMINISTRATIVE REVIEW OF DECISION—DISMISSALS SHOULD BE GRANTED SPARINGLY.

Where confusion existed for both parties over proper method of obtaining administrative review of decision to assess foreign repair duties, particularly where the party seeking relief has relied upon Customs officials for guidance, *dismissals should be granted sparingly.*

3. ON MOTION TO DISMISS—UNCONTROVERTED FACTUAL ALLEGATIONS ACCEPTED AS TRUE.

In considering a motion to dismiss, all uncontroverted factual allegations in the complaint, along with the supporting affidavits of record, should be accepted as true.

4. NOTICE OF LIQUIDATION.

The record shows that there was a notice of liquidation here, so

---

[4] 28 USC 2602(a) reads as follows:
(a) Every proceeding in the Court of Customs and Patent Appeals arising under section 516 of the Tariff Act of 1930, as amended, shall be given precedence over other cases on the docket of such court, except as provided for in paragraph (b) of this section, and shall be assigned for hearing at the earliest practicable date and expedited in every way.

that subparagraph 19 U.S.C. 1514(c)(2)(A) clearly applies and, thus, subparagraph (2)(B) does not apply.

5. PETITION FOR REVIEW OF DENIAL OF APPLICATION.

There appears to be no reason why, in a case where an application for relief from duties on equipment and repairs to American vessels has been followed by a liquidation, a petition for review of denial of the application (implied by the liquidation) cannot be considered under 19 CFR 4.14(k).

6. PROTEST LIMITATION PERIOD TOLLED.

Rather than elevate form over substance, held that ninety-day period of limitations for filing a protest to liquidation was tolled from date of petition for cancellation of November 5, 1975, until final notice, dated July 28, 1977, of denial of petitioner's supplemental petition.

(F. 2d)

FARRELL LINES, INC. AS SUCCESSOR TO AMERICAN EXPORT LINES INC., APPELLANT *v.* UNITED STATES, APPELLEE

No. 80–38

United States Court of Customs and Patent Appeals, August 20, 1981, Appeal from United States Court of International Trade, C.D. 4864.

[Reversed and Remanded.]

Nicholas H. Cobbs, attorney for appellant.

Thomas S. Martin, Acting Asst. Atty. General, *David M. Cohen*, Director, *Joseph I. Liebman*, Attorney-in-Charge, *Barbara M. Epstein*, of counsel, attorneys for appellee.

[Oral argument on May 4, 1981 by *Nicholas H. Cobbs* for appellant and *Barbara M. Epstein*, for appellee.]

Before MARKEY, *Chief Judge*, RICH, BALDWIN, MILLER, AND NIES, *Associate Judges*.

MILLER, *Judge*.

[1] This appeal is from the judgment of the United States Customs Court (hereinafter referred to as the Court of International Trade) in *American Export Lines, Inc.* v. *United States*, — Cust. Ct. —, C.D. 4864 (1980), dismissing for lack of jurisdiction an action by American Export Lines, Inc. ("AEL"), to recover duties assessed on repairs made overseas to its ship, the C. V. *Lightning*. We reverse and remand.

As described by the Court of International Trade, the repairs were necessitated by an unexpected grounding of the ship as it was departing New York for Europe. Although the ship was freed in a short time, its master anchored it for inspection. After inspection by both the crew and an American Bureau of Shipping engineer, it was found to be seaworthy, and it continued on its voyage. After docking

at Bremerhaven, West Germany, there was another inspection for damage, as a result of which an American Bureau of Shipping surveyor in Bremerhaven found the ship unseaworthy and required that repairs be made before he would authorize a return voyage. After repairs were made in Amsterdam in the amount of $346,850.13, the ship returned to New York. Pursuant to section 466(a) of the Tariff Act of 1930, 19 U.S.C. 1466,[1] duties in the amount of $153,842.14 were assessed.

AEL contends that the casualty suffered by the C. V. *Lightning* in running aground falls within the remission or refund provision of section 466. The Government denies that the grounding of the ship constituted a casualty within the regular course of her voyage and contends that AEL does not qualify for the remission or refund of duties authorized by section 466. Primarily at issue here are the Government's argument that AEL failed to file a protest within ninety days after the posting of notice of liquidation and the holding of the Court of International Trade that the filing by AEL of its summons with the court was not timely.

As found by the Court of International Trade, the following is a chronological list of filings and responses between the parties:

June 27, 1974—Vessel repair entry filed by AEL.
July 1, 1974—Application for relief from duties on ship's foreign repairs (no log abstract as required by 19 CFR 4.14(f) but Coast Guard report and master's statement included).[2]
August 20, 1975—Final itemized repair cost invoices filed by AEL.
October 24, 1975—Entry liquidated (Bulletin Notice showing liquidation this date in record); bill for $153,842.14 duties sent to AEL.
November 5, 1975—AEL letter to Commissioner of Customs, Washington, D.C., requesting cancellation of the duties.
November 6, 1975—Copy of November 5 letter sent to Customs officials in New York. Cover letter refers to said letter as "petition for cancellation" and requests that it be forwarded to Customs Service Headquarters in Washington, D.C.
January 7, 1976—AEL letter to Commissioner of Customs asking for response to the November 5 letter requesting "cancellation" of duties.

---

[1] The statute provides for a duty of 50 per centum to be assessed on the cost of repairs and equipment and parts therefor in a foreign port for a ship, documented under the laws of the United States, engaged or intended to engage in foreign or coasting trade; further, that if the owner or master furnishes good and suf t ficient evidence that the ship, while in the regular course of her voyage, was compelled by stress of weathe- or other casualty to put into such foreign port for repairs in order to be safe and seaworthy to reach her porr of destination, the Secretary of the Treasury may remit or refund the duties. Compensation paid to members of the regular crew in connection with installation of equipment and making of repairs is not included in the cost thereof.

[2] AEL states that it never received a response to its application. The Government was unable to produce a copy, and an affidavit from Ross Griffin, Chief of the Carrier Control Branch, Inspection and Control Division, New York Seaport Area, United States Customs Service, merely states his "belief" that such response was given.

352-987 O - 81 - 5

February 5, 1976—Reply from Carrier Rulings Branch of Customs Service Headquarters stating there is no record of receipt of the November 5 letter and requesting that AEL direct its petition "to this office through the involved Customs office."

February 9, 1976—AEL letter to Carrier Rulings Branch stating that its "petition" of November 5, 1975, was, in fact, directed "to your office through the U.S. Customs Service here in New York." Bill for duties attached, and "If, however, there is something additional you require from us please do not hesitate to so advise." [3]

January 14, 1977—Letter from Headquarters, Customs Service, Washington, D.C., to Regional Commissioner of Customs, New York, denying "petition" of AEL "seeking remission of duties".[4]

April 7, 1977—AEL "supplemental petition for relief" and containing supplemental information sent to Headquarters, Customs Service, through the Area Director of Customs, New York.

July 28, 1977—Letter from Headquarters, Customs Service, Washington, D.C., to Area Director of Customs, New York, stating "Relief is denied" and giving a more complete analysis than the January 14, 1977, letter.

September 27, 1977—Formal protest filed by AEL, referring to decision of July 28, 1977.

October 7, 1977—Formal protest denied because "Original Customs decision reviewed and found to be correct".

January 30, 1978—AEL files summons with Customs Court.

In addition to the above, affidavits filed by AEL in opposition to the government's motion to dismiss establish, without contravention, that numerous informal meetings between AEL's representatives and Customs officials took place from June of 1974 to January 24, 1977, during the course of which Customs officials (including the Regional Counsel for the Eastern Division) advised that AEL had ninety days in which to appeal the denial of AEL's petition for remission of duties by filing a formal protest; further, that at no time were they advised that AEL's formal protest was not timely [5] or that the time for filing

---

[3] There is no showing that the Customs Service ever indicated a deficiency of documentation in the July 1, 1974, application, and AEL asserts that the ship's log abstract would have contained no information of value to the Customs Service, "since any entry pertaining to the grounding would merely note the time and place of the occurrence and duplicate the information contained in the Master's statement." Under such circumstances and contrary to the view of the Court of International Trade that failure to file a log abstract within ninety days of entry voided AEL's application for relief, we are persuaded that the requirement for a log abstract was waived. In any event, the case turns on what happened after liquidation.

[4] The Court of International Trade states that the denial related to "another letter to Customs, repeating the information contained in the November 1975 letters, together with a request for the cancellation of the vessel repair duties." However, the January 14, 1977, letter refers to the Regional Commissioner's "letter of March 12, 1976, submitting a petition filed by American Export Lines, Inc., under section 4.14(k) of the Customs Regulations." It appears that the "petition" referred to was a letter ("petition for cancellation") from AEL to the Commissioner of Customs, Washington, D.C., dated March 4, 1976, which repeated the substance of AEL's November 5, 1975, letter.

[5] There is support for such a statement on the face of the denial of AEL's formal protest, with the box checked for "Original Customs decision reviewed and found to be correct" and the box labelled "Untimely filed" left blank.

a formal protest had expired or that a formal protest should have been filed within ninety days following liquidation on October 24, 1975.

[2] We note that, in reaching a decision on this case, the Court of International Trade said: "It cannot be disputed that confusion existed for both parties as to the proper method to obtain administrative review of the decision to impose assessment of foreign repair duties." In such a situation, particularly where the party seeking relief has relied upon Customs officials for guidance, *dismissals should be granted sparingly. Dann* v. *Studebaker-Packard Corp.*, 288 F. 2d 201, 215–16 (6th Cir. 1961); *Kingwood Oil Co.* v. *Bell*, 204 F. 2d 8, 12–13 (7th Cir. 1953). **[3]** All uncontroverted factual allegations in the complaint, along with the supporting affidavits of record, should be accepted as true.[6] *See Scheuer* v. *Rhodes*, 416 U.S. 232, 236 (1974); *Smith* v. *Gross*, 604 F. 2d 639, 641 n. 1 (9th Cir. 1979); *O'Connor* v. *Yezukevicz*, 589 F. 2d 16, 18 (1st Cir. 1978); *Stern* v. *United States Gypsum, Inc.*, 547 F. 2d 1329, 1332 (7th Cir.), *cert. denied*, 434 U.S. 975 (1977); *Garrett* v. *Bamford*, 538 F. 2d 63, 65 (3d Cir.), *cert. denied*, 429 U.S. 977 (1976).

Without citation to any authority, the Court of International Trade held that the decision of the Customs Service denying AEL's petition for remission of duties was not subject to protest under 19 U.S.C. 1514(c)(2)(B).[7] **[4]** However, the record shows that there was a notice of liquidation here, so that subparagraph (2)(A) clearly applies and, thus, subparagraph (2)(B) does not apply. Moreover, in 19 U.S.C. 1466, *supra* note 1, the Congress established an administrative procedure, implemented in detail by Customs Regulation 19 CFR 4.14, whereby the owner or operator of a vessel may apply for relief (remission or refund) from duties in accordance with the authority of the Secretary of the Treasury and may petition the Commissioner of Customs for review of the district director's decision on the application. This court has held that Congress intended thereby to confer upon the Secretary the exclusive and final authority to act on such a petition and that the Court of International Trade is *without jurisdiction* over his action. *Waterman Steamship Corp.* v. *United States*, 30 CCPA 119, C.A.D. 223 (1942). *See* Sturm, *Customs Law and Administration* § 56.3 (1980). As the Court of International Trade pointed out, it appears that this procedure was designed to

---

[6] Although not so labelled by the Court of International Trade, the Government's motion plus affidavits of both parties could well be considered a motion for summary judgment. In such a case, the underlying facts contained in the affidavits must be viewed in the light most favorable to the party opposing the motion. *United States* v. *Diebold, Inc.*, 369 U.S. 654 (1962).

[7] 19 U.S.C. 1514(c)(2) provides, in pertinent part:

> (2) A protest of a decision, order, or finding described in subsection (a) of this section shall be filed with such Customs officer within ninety days after but not before—
>
> (A) notice of liquidation or reliquidation, or
>
> (B) in circumstances where subparagraph (A) is inapplicable, the date of the decision as to which protest is made.

avoid unnecessary liquidations. [5] However, there appears to be no reason why, in a case where an application has been followed by a liquidation, a petition for review of denial of the application (implied by the liquidation as recognized by the Government in its brief) cannot be considered under 19 CFR 4.14(k) of the regulation.[8] Indeed, that is precisely the procedure followed in this case, and both the filing of the petition and supplemental petition and their consideration appear to have been in the utmost good faith of both AEL and the Customs Service. Now, however, the Government urges, in effect, that, because no protest to the liquidation of October 24, 1975, was filed within ninety days, the petition and supplemental petition for review of the district director's decision and their consideration by the Customs Service amounted to a charade.

[6] Rather than thus to elevate form over substance, we hold that the ninety-day period of limitations for filing a protest to the liquidation of October 24, 1975, was tolled [9] from the date of the petition for cancellation of November 5, 1975, until the notice, dated July 28, 1977, of denial of AEL's supplemental petition.[10] *Cf. Schering Corp.* v. *United States*, — CCPA —, — C.A.D. 1250, 626 F. 2d 162, 166 n.8 (1980) (unavailability of entry papers does not void an otherwise valid liquidation, but tolls the liquidation until entry papers become available for examination). We agree with AEL that tolling should run until final agency action on its supplemental petition, which elicited a more complete analysis than that provided by the Customs Service in its January 14, 1977, denial of the petition.

Since, under tolling, only seventy-three days of the ninety-day period of limitations for filing a protest had expired when AEL filed its formal protest on September 27, 1977, the protest was timely. Denial of the formal protest was under date of October 7, 1977, and filing of the summons with the Court of International Trade on

---

[8] Subparagraph (k) provides, in pertinent part:

> The owner or operator of the vessel involved * * * may file with the district director a petition addressed to the Commissioner of Customs for a review of the district director's decision on an application claiming relief under section 3115, Revised Statutes, as amended [19 U.S.C. 1466(d)] * * *. Such petition shall be filed within 30 days from the date of the notice of the district director's decision * * *. When such a petition has been filed, the district director shall immediately transmit both copies thereof and the entire file to Headquarters, U.S. Customs Service, together with any comments he may desire to submit. When the Headquarters, U.S. Customs Service decision has been received the entry shall be liquidated in accordance therewith.

[9] "The running of the statue of limitations may be suspended by causes not mentioned in the statue itself." *Braun* v. *Sauerwine*, 77 U.S. (10 Wall.) 218, 223 (1869); *Collins* v. *Woodworth*, 109 F. 2d 628, 629 (6th Cir. 1940).

[10] See the following table:

Action	*Lapsed time of 90-d period for filing protest (days)*
Liquidation, 10/24/75	
Petition for cancellation, 11/5/75	12
Denial of supp', petition, 7/28/77	
Formal protest file, 9/27/77	61
Total lapsed time of 90-d period	73

January 30, 1978, was well within the 180-day period for doing so, as provided by 28 U.S.C. 2631(a) (1976).

We note that the Court of International Trade agreed with one of AEL's arguments, namely: that the November 5, 1975, letter amounted to a timely filed "protest." In doing so, it recognized, properly, that it is "basic to customs law that protests are not to be strictly construed." However, that was only a Pyrrhic victory for AEL, because the Court of International Trade then held that the letter of January 14, 1977, from Headquarters, Customs Service, Washington, D.C., constituted a denial of the "protest" and began the running of the 180-day period for filing a summons with the court; that the letter of July 28, 1977, merely reaffirmed the letter of January 14, 1977, and "did not cause the 180-day statutory period to commence again";[11] and, finally, that the summons filed January 30, 1978, was, therefore, untimely. Our principal difficulty with this approach is that both parties consistently and in good faith treated the letters from AEL as a valid petition for remission ("cancellation") in all of their dealings, and the formal protest of September 27, 1977, was treated as a timely protest by both parties.[12]

In view of the foregoing, the judgment of the Court of International Trade must be reversed and the case remanded for further proceedings consistent with this opinion.

---

[11] 19 U.S.C. 1514(b)(1) (1976) provides: "only one protest may be filed for each entry of merchandise." There is no similar provision with respect to petitions for review of the denial of an application for remission or refund of duties.

[12] AEL has argued, *inter alia*, for relief under the theory of equitable estoppel. However, "[E]quitable estoppel, even if available in cases involving the Government in its proprietary capacity, is not available against the Government in cases involving the collection or refund of duties on imports." *Air-Sea Brokers, Inc. v. United States*, 66 CCPA —, —, C.A.D. 1222, 596 F. 2d 1008, 1011 (1979).

United States Court of International Trade

One Federal Plaza
New York, N.Y. 10007

Chief Judge

Edward D. Re

Judges

Paul P. Rao
Morgan Ford
Scovel Richardson
Frederick Landis
James L. Watson
Herbert N. Maletz
Bernard Newman
Nils A. Boe

Senior Judge

Samuel M. Rosenstein

Clerk

Joseph E. Lombardi

Decisions of the United States Court of International Trade

(Slip Op. 81–74)

HOUSE OF IDEAS, INC., PLAINTIFF *v.* UNITED STATES, DEFENDANT
Court No. 78–7–01323

Before WATSON, *Judge.*

DECISION

CLASSIFICATION—BANKS IN HUMAN SHAPE

The bank component of papier-mache banks shaped like clowns, was found to be of equivalent or greater importance to its commercial function than its human shape. Therefore, the bank was not adequately described as a doll under Item 737.20, TSUS, and was more

properly classifiable as articles of papier-mache not specially provided for under Item 256.75, TSUS.

GENERALIZED SYSTEM OF PREFERENCES—ENTITLEMENT TO GSP TREATMENT

The merchandise was classified under Item 256.75, TSUS, and exported from a beneficiary country for GSP purposes. Thus, completion of the certificate of origin in compliance with regulations promulgated under General Headnote 3(a)(ii), of the TSUS entitled the merchandise to duty-free treatment.

[Judgment for plaintiff.]

(Decided August 11, 1981)

Glad & White, (*Edward N. Glad* at the trial; *Steven B. Lehat* on the brief), for the plaintiff.

Stuart E. Schiffer, Acting Assistant Attorney General; *Joseph I. Liebman*, Attorney in Charge, International Trade Field Office, Commercial Litigation Branch (*Saul Davis*, at the trial and on the brief) for the defendant.

WATSON, *Judge:* Plaintiff challenges the denial of its protest against the government's classification of his merchandise as dolls, under Item 737.20, TSUS,[1] as modified by T.D. 68/9, dutiable at 17.5 percent ad valorem. Plaintiff contends that the proper classification of the merchandise is "articles of papier-mache not specially provided for," under Item 256.75,[2] TSUS, which is duty free under the General System of Preferences, for products of Taiwan.

The items in question were exported from Taiwan on March 25, 1977 and entered at the Port of Los Angeles. They are described on the Special Customs Invoice and the GSP Certificate of Origin as "Toys #452 Clown Bank." Plaintiff's Exhibit 1, which is a representative sample of the items, is a brightly colored, hollow, papier-mache figure in the form of a clown with a top-hat. The figure is 7 and ¾ inches tall and (approximately) 11 inches in circumference at the waist. In the back of the figure's head there is a slot for coins, and in what would be the bottom (The bottom of the sample was destroyed to determine its component materials.) there is a hole with a rubber plug.

I

Plaintiff argues that this object is a bank and the clown-like attributes of the sample are ornamental, and without independent

---

[1] Item 737.20. Dolls, and parts of dolls including doll clothing
17.5% ad val., 70% ad val.
Dolls (dressed or undressed).

[2] Item 256.70. Articles, of pulp, of papier-mache, of paper, of paperboard, or of any combination thereof, not specially provided for:
Of pulp, not including articles of paper or of paperboard 5% ad val., 30% ad val.
Of papier-mache, 4% ad val., 25% ad val.

commercial significance. Alternatively, plaintiff argues that if there is a doll component to the object, the integration of the functions and features of the doll and the bank makes the object "more than" a doll.

The government's defense is that the plaintiff has failed to adduce any proof which shows the sample to be more than a doll. Additionally, it argues that the doll provision is an "eo nomine" provision and, based on lexicographical authorities and plaintiff's own advertising materials, it is sufficiently broad a term to encompass this article.

For reasons set forth below it is the opinion of the Court that the items in question are not fully described as dolls.

In *Janex Corp.* v. *United States*, 80 Cust. Ct. 146, C.D. 4748 (1978), the Court was confronted with plastic figurines resembling the fictional characters Raggedy Ann and Raggedy Andy, which were designed to light up when lifted up off a surface and switch off when placed down. The Court, in granting summary judgment to the plaintiff, held that the nightlight feature was "not incidental, subsidiary, or auxiliary to the use of the articles as 'dolls' as that term is commonly used." Id. at 152. The rationale was that the plastic figurine combined the separate functions of two distinct articles, i.e., a doll and a nightlight, resulting in a hybrid product with un que commercial and design properties and a purpose distinct from that of a doll. Therefore, Item 737.20, TSUS, providing only for the doll aspect of the plastic figure, inadequately described the article, and classification as such was incorrect.

Defendant argues that the items in question do not meet the "two equally essential functions" test of *Janex*. The design and construction of plaintiff's exhibit #1 belie that contention. It is patently clear that the object has two design characteristics. One, the doll component, has the superficial appearance of a human figure. The other, the bank component, has the function of a receptacle and storage space for coins or folded bills. Inasmuch as the commercial viability of the item depends on its functioning as a bank, this aspect of the article is not insignificant or incidental to the use of the article as a replica of a human figure. The Court is of the opinion, that the item satisfied the rationale of *Janex*, supra.

Defendant's reliance on *Fortune Star Products Corp.* v. *United States*, 78 Cust. Ct. 184, C.R.D. 77–3 (1977), to uphold the classification of the items as dolls is misplaced. There, Judge Maletz denied plaintiff's motion for summary judgment in which plaintiff argued that a doll figure containing a radio, was "more than" a doll based on the "predominant cost" of the radio. The motion was denied because plaintiff's affidavit regarding the costs, lacked "documentation, detail and explanation" and was inadmissable on evidentiary grounds.

In any event, the "predominant cost" analysis is not apropos to the specific facts of this case. The item in question does not have two or more physically severable, separately identifiable parts, the costs of which can be examined in isolation, and weighed against each other, as was the case in *Fortune*, supra. Rather the existence of the doll and bank components of the article springs from a unitary and indivisible source—the shaped papier-mache.

Likewise, *Amico, Inc.* v. *United States*, 66 CCPA 5, C.A.D. 1214, 586 F. 2d 217 (1978) and *United States* v. *Cody Manufacturing Co., Inc.*, et al., do not support the classification of this merchandise as a "doll." In *Amico*, the Court of Customs and Patent Appeals ruled that a music box with two dancing figures, was incorrectly held to be "more than" a music box. The Court concluded that the fact that the two dancers "constituted a major selling feature" was insufficient to justify the invocation of the "more than" doctrine. It reasoned that the function of the two figures was "solely that of design and appearance," and that they had no value, or commercial function apart from their connection with the music box. Here the human shape has no function other than to make attractive the receptacle and storage space which is the bank component of the article, so as to make it desirable to the intended class of users. If anything, the *Amico* rule that commercial function rather than design and appearance is the determinant of classification suggests that the doll portion of this article should not be the basis for classification.

In *Cody*, the Court held that a plastic figurine with a spike extending from its torso, was not "more than" a doll. The spike served no purpose other than to connect the figurine to a music box so it could appear to dance while the music box was in operation. The Court's analysis hinged on the fact that the metal spike in no way altered the appearance or use of the figurine as a replica of a ballerina. That is to be distinguished from the case at hand, where the item is a replica of a human being, yet has an important unrelated function as a bank.

The government's alternative argument is that the dolls provision of the TSUS is an "eo nomine" provision, and as such the Court is prevented from looking to the use of the article in question and must instead look to lexicographical authorities and plaintiff's own descriptions of similar articles, to determine whether it is a doll.

The simple answer to this argument is that there is no all encompassing definition of what is a doll. *Russ Berrie & Co., Inc.* v. *United States*, 76 Cust. Ct. 218, 224–5, C.D. 4659, 417 F. Supp. 1035 (1976). While the Court is to be *guided* by lexicographical authorities, there need not be a slavish or automatic deference to what lexicographical authorities define as dolls. This is especially so when the lexicographical authorities describe as dolls items (Def. Br. at 28) which by

law may not be dolls. The Mr. Peanut salt and pepper shakers described as "doll" in defendant's exhibit #B–1, and "kewpies" designed to hold talcum powder in defendant's exhibit #B–2 are cases in point. It is true that plaintiff in its merchandising materials has described banks in human form, painted to resemble the native costumes of different countries as the "Bank Dolls of all Nations." (Defendant's Exhibit #B–5.) This fact is not dispositive of the issue of whether the item before the Court is a doll. The manner in which an article is merchandised is but one of several factors to be considered in determining the proper classification of an article. *S.Y. Rhee Importers* v. *United States*, 61 CCPA 2, 4 C.A.D. 1108, 486 F. 2d 1385 (1973); *Ignaz Strauss & Co., Inc.* v. *United States*, 37 CCPA 32, 35 C.A.D. 415 (1949); *Russ Berrie & Co., Inc.* v. *United States*, 76 Cust. Ct. 218, 226 C.D. 4659, 417 F. Supp. 1035 (1976); *Novelty Import Co., Inc.* v. *United States*, 53 Cust. Ct. 274, 276, Abs. 68780 (1964).

Moreover, it should be made clear, that the Court may consider the use of a product to determine its identity, even if it is alleged that the product falls within an "eo nomine" tariff provision. *United States* v. *Quon Quon Company*, 46 CCPA 71, 74 (1959).

To sum up, the Court is of the opinion that the merchandise is not adequately described by Item 737.20 of the TSUS as modified by T.D. 68/9 for dolls, but rather is more properly classified as "articles of papier-mache not specially provided for" under Item 256.75 of the TSUS.

II

In response to the plaintiff's request for GSP treatment the government argues that form "A" entitled "Generalized System of Preferences, Certificate of Origin" filed with the entry is sufficient only to serve as proof of "compliance with regulations." That is to say, the government claims form "A" is insufficient to show compliance with the statutory requirements of General Headnote 3(a)(ii) of the TSUS. The government further argues that completion of the form by the exporter rather than the manufacturer, vitiates the use of form "A" as evidence of the origin of the merchandise in question.

Both of these contentions are without merit. Section 3(a)(ii) of the General Headnotes and Rules of Interpretation for the TSUS (1976), plainly confers power on the Secretary of the Treasury to promulgate regulations for the implementation of the Tariff Schedules.[3]

* * * * * * *

[3] Whenever an eligible article is imported into the customs territory of the United States directly from a country or territory listed in subdivision (c)(i) of this headnote, it shall receive duty-free treatment, unless excluded from such treatment by subdivision (c)(iii) of this headnote, provided that, in accordance with regulations promulgated by the Secretary of the Treasury:

(A) the sum of (1) the cost or value of the materials produced in the beneficiary developing country plus (2) the direct costs of processing operations performed in such country is not less than 35 percent of the appraised value of such article at the time of its entry into the customs territory of the United States; or

This being a lawful delegation of power, compliance with the regulations issued by the Secretary of the Treasury is a precondition to receiving GSP treatment. *Socony Vacuum Oil Co., Inc.* v. *United States*, 44 CCPA 83, 90, C.A.D. 641 (1957); *J. E. Bernard & Co.* v. *United States*, 62 Cust. Ct. 304, 310, C.D. 2750, 304 F. Supp. 1034 (1969).

19 CFR 10.173 (1980) entitled "Evidence of the Country of Origin," regarding the Generalized System of Preferences Certificate of Origin form "A," states in plain English that the form shall be filed with the district director, "as evidence of the country of origin." [4]

Inasmuch as the language of 19 CFR 10.176 (1980) [5] duplicates the language of General Headnote 3(a)(ii), requiring that not less than 35 percent of the value of the article inclusive of materials and production costs be attributable to the beneficiary country, it is reasonable to conclude that compliance with the regulations is compliance with the General Headnote.

Plaintiff offered uncontroverted proof that form "A" was completed in the manner required by regulation, and that its contents were not challenged by Customs officials. In addition, it was proved that the form contained the designation "P" in column 8 indicating the materials and manufacture of the merchandise in question were completely indigenous to Taiwan. Thus the burden of proof as to why the merchandise should not receive GSP treatment was placed squarely on the government.

The government has not satisfied this burden of proof with the argument that form "A" is not to be given credence because it was completed by the exporter rather than the manufacturer. The government claims the exporter has no actual knowledge of the origin of the materials, or of the production costs involved in manufacturing the goods in question. This argument may have merit, but it contravenes the plain language of 19 CFR 10.173(a)(1) (1980), requiring the *exporter* to sign form "A." In addition, this argument ignores two facts. The first being that form "A" is *certified by an independent governmental authority of the exporting country*, designated for that purpose by the Customs Service. R. Sturm, Customs Law and Administration, § 63.6 (1980). The second being that customs officials can

---

[4] § 10.173 Evidence of the country of origin:

(a) *Shipments valued in excess of $250*—(1) *Certificate of Origin.* Except as provided in paragraph (a)(5) of this section, the importer or consignee of a shipment of eligible merchandise valued in excess of $250 shall file with the entry the Generalized System of Preferences Certificate of Origin Form A, *as evidence of the country of origin.* Form A *shall be signed by the exporter of the merchandise* in the country from which it is directly imported, certified by the designated governmental authority in that country, and properly completed. [emphasis supplied]

[5] § 10.176 Country of origin criteria.

(a) *Merchandise produced in one beneficiary developing country.* Merchandise which is the growth, product, manufacture, or assembly of a beneficiary developing country and which is imported directly from such beneficiary developing country may qualify for duty-free entry under the Generalized System of Preferences only if the sum of the cost or value of the materials produced in the beneficiary developing country, plus the direct costs of processing operations performed in such country, is not less than 35 percent of the value of the article as appraised in accordance with section 402 or 402a, Tariff Act of 1930, as amended (19 U.S.C. 1401a, 1402).

request further evidence of the country of origin as such evidence is "subject to such verification as the district director deems necessary." 19 CFR 10.173(a)(4) (1980).[6] There is no indication in the record that such information was requested.

In light of the above, this Court is of the opinion that the information in Form "A" completed by Dependable Products (the exporter) in conformance with the requirements of 19 CFR 10.173 (1980) is evidence of the country of origin of the merchandise in question.

As the merchandise in question is the product of Taiwan,[7] and is properly classifiable under Item 256.75 of the TSUS, it is entitled to GSP treatment.

The Court having determined that the merchandise is entitled to GSP treatment, which under the TSUS means it is duty-free, need not reach the issue of valuation.

For the reasons expressed above, it is held that the merchandise in question is properly classifiable as articles of papier-mache not specially provided for under Item 256.75 of the TSUS. Accordingly, the merchandise is duty-free, as Item 256.75 is entitled to GSP treatment and Taiwan was a beneficiary country for purposes of the GSP in 1976.

Judgment will enter accordingly.

---

[6] (4) *Verification of evidence.* Evidence of the country of origin required under this paragraph shall be subject to such verification as the district director deems necessary.

[7] Taiwan is listed as the "Republic of China" on the list of countries designated as "Beneficiary Developing Countries for Purposes of the Generalized System of Preferences" General Headnote 3(c)(1), TSUS, 1976.

Decisions of the United States Court of International Trade

Abstracts

Abstracted Protest Decisions

DEPARTMENT OF THE TREASURY, *August 17, 1981.*

The following abstracts of decisions of the United States Court of International Trade at New York are published for the information and guidance of officers of the customs and others concerned. Although the decisions are not of sufficient general interest to print in full, the summary herein given will be of assistance to customs officials in easily locating cases and tracing important facts.

WILLIAM T. ARCHEY,
Acting Commissioner of Customs.

DECISION NUMBER	JUDGE & DATE OF DECISION	PLAINTIFF	COURT NO.	ASSESSED	HELD	BASIS	PORT OF ENTRY AND MERCHANDISE
				Par. or Item No. and Rate	Par. or Item No. and Rate		
P81/140	Richardson, J. August 10, 1981	Dessau Brass, Inc.	79-10-01500	Item 654.00 or 653.35 5% Item 653.37 9.5% Item 657.35 7.5% + 0.6¢ per lb.	Items A654.00, A653.35, A653.37 and A657.35 Free of duty pursuant to G.S.P.	Agreed statement of facts	New York Articles of brass; products of eligible beneficiary country

DECISION NUMBER	JUDGE & DATE OF DECISION	PLAINTIFF	COURT NO.	ASSESSED	HELD	BASIS	PORT OF ENTRY AND MERCHANDISE
				Par. or Item No. and Rate	Par. or Item No. and Rate		
P81/141	Watson, J. August 10, 1981	WFS Div. Amer. Rec. Grp., Ltd.	79-1-00036-S	Item 389.70 25¢ per lb. + 15%	Item 735.20 10%	Newman Importing Co., Inc. v. U.S. (C.D. 4648)	Chicago Nylon backpacking tents
P81/142	Newman, J. August 12, 1981	M. Rubin & Sons Inc.	79-6-00983	Item 380.00 35%	Item 380.39 16.5%	Agreed statement of facts	New York Men's or boys' wearing apparel of cotton, not ornamented, not knit
P81/143	Re, C.J. August 14, 1981	Sanyo Electric Inc.	76-9-02116, etc.	Item 683.70 35%	Item 688.40 5.5%	Sanyo Electric Inc. v. U.S. (C.D. 4855, aff'd C.A.D. 1258)	New York Power failure lights
P81/144	Re, C.J. August 14, 1981	Sanyo Electric Inc.	76-9-02184, etc.	Item 683.70 35%	Item 688.40 5.5%	Sanyo Electric Inc. v. U.S. (C.D. 4855, aff'd C.A.D. 1258)	Los Angeles Power failure lights
P81/145	Newman, J. August 14, 1981	Carlyle Footwear	80-11-00047	Item 700.60 20%	Item 700.35 8.5%	Agreed statement of facts	Los Angeles Men's, youths' or boys' footwear of leather, not having uppers of fibers

Decisions of the United States Court of International Trade

Abstracts

Abstracted Reappraisement Decisions

DECISION NUMBER	JUDGE & DATE OF DECISION	PLAINTIFF	COURT NO.	BASIS OF VALUATION	HELD VALUE	BASIS	PORT OF ENTRY AND MERCHANDISE
R81/286	Re, C.J. August 10, 1981	Nichimen Co., Inc.	75-8-01953	Export value	Appraised values shown on entry papers, less additions included to reflect currency revaluation	C.B.S. Imports Corp. v. U.S. (C.D. 4739)	Los Angeles Miscellaneous articles
R81/287	Richardson, J. August 10, 1981	Mitsubishi International Corporation	73-6-01422, etc.	American selling price	Appraised values less 23%, per pair	Agreed statement of facts	Seattle Footwear
R81/288	Richardson, J. August 10, 1981	Puerto Rico Olefins Company	78-6-01052, etc.	Export value	Invoiced unit values appearing in entry papers	Agreed statement of facts	San Juan Miscellaneous articles
R81/289	Re, C.J. August 11, 1981	Nichimen Co., Inc.	75-4-00832, etc.	Export value	Appraised values shown on entry papers less additions included to reflect currency revaluation	C.B.S. Imports Corp. v. U.S. (C.D. 4739)	Los Angeles-Long Beach (Los Angeles) Miscellaneous articles

DECISION NUMBER	JUDGE & DATE OF DECISION	PLAINTIFF	COURT NO.	BASIS OF VALUATION	HELD VALUE	BASIS	PORT OF ENTRY AND MERCHANDISE
R81/290	Richardson, J. August 11, 1981	Topp Electronics, Inc.	79-2-00329	Constructed value	Specified on entry papers by liquidating officer excluding one-half of amount added for assists	Agreed statement of facts	Los Angeles Miscellaneous articles
R81/291	Richardson, J. August 11, 1981	Topp Electronics, Inc.	79-3-00436	Constructed value	Specified on entry papers by liquidating officer excluding one-half of amount added for assists	Agreed statement of facts	Los Angeles Miscellaneous articles
R81/292	Re, C.J. August 12, 1981	Marubeni America Corp.	75-5-01261	Export value	Unit values found by appraising customs official, less ocean freight and marine insurance, and without additions for currency fluctuation	C.B.S. Imports Corp. v. U.S. (C.D. 4739)	Chicago; New York Miscellaneous articles
R81/293	Re, C.J. August 12, 1981	Mitsubishi International Corp.	73-7-02127	Export value	Appraised values shown on entry papers, less additions included to reflect currency revaluation	C.B.S. Imports Corp. v. U.S. (C.D. 4739)	Chicago; New York; Los Angeles Miscellaneous articles
R81/294	Re, C.J. August 12, 1981	Mitsubishi International Corp.	75-5-01262	Export value	Appraised values shown on entry papers, less additions included to reflect currency revaluation	C.B.S. Imports Corp. v. U.S. (C.D. 4739)	Chicago; New York Miscellaneous articles

R81/295	Re, C.J. August 12, 1981	Mitsubishi International Corp.	75-11-02798	Export value	Appraised values shown on entry papers, less additions included to reflect currency revaluation	C.B.S. Imports Corp. v. U.S. (C.D. 4739)	New York Miscellaneous articles
R81/296	Re, C.J. August 12, 1981	Mitsubishi International Corp.	76-3-00617	Export value	Appraised values shown on entry papers, less additions included to reflect currency revaluation	C.B.S. Imports Corp. v. U.S. (C.D. 4739)	New York Miscellaneous articles
R81/297	Richardson, J. August 12, 1981	Mitsubishi International Corporation	72-12-02548, etc.	American selling price	Appraised values less 23%, per pair	Agreed statement of facts	Los Angeles Footwear
R81/298	Watson, J. August 12, 1981	Ciba Chemical & Dye Co., Div. Ciba Corp.	R70/7781	United States value	U.S. selling prices, less 1% cash discount as determined by customs officer at time of appraisement; less 29.2% representing profit and general expenses usually made in U.S. on sales of dyestuffs of same class or kind; less costs of transportation and insurance from place of shipment to place of delivery in amounts determined by customs officer at time of appraisement; divided by 1.40 or such other factor applied by customs officer, to allow for customs duties payable on imported dyestuffs	U.S. v. Geigy Chemical Corporation et al. (C.A.D. 1155)	New York Benzenoid dyestuffs

DECISION NUMBER	JUDGE & DATE OF DECISION	PLAINTIFF	COURT NO.	BASIS OF VALUATION	HELD VALUE	BASIS	PORT OF ENTRY AND MERCHANDISE
R81/289	Watson, J. August 12, 1981	Ciba Co. Inc.	R66/2635	United States value	U.S. selling prices, less 1% cash discount as determined by customs officer at time of appraisement; less 25.3% representing profit and general expenses usually made in U.S. on sales of dyestuffs of same class or kind; less costs of transportation and insurance from place of shipment to place of delivery in amounts determined by customs officer at time of appraisement; divided by 1.40 or such other factor applied by customs officer, to allow for customs duties payable on imported dyestuffs	U.S. v. Geigy Chemical Corporation et al. (C.A.D. 1155)	New York Benzenoid dyestuffs

R81/289	Watson, J. August 12, 1981	Geigy Chemical Corp.	R65/18/02	United States value	U.S. selling prices, less 1% cash discount as determined by customs officer at time of appraisement; less 24.2% representing profit and general expenses usually made in U.S. on sales of dyestuffs of same class or kind; less costs of transportation and insurance from place of shipment to place of delivery in amounts determined by customs officer at time of appraisement; divided by 1.40 or such other factor applied by customs officer, to allow for customs duties payable on imported dyestuffs	U.S. v. Geigy Chemical Corporation et al. (C.A.D. 1155)	New York Benzenoid dyestuffs

DECISION NUMBER	JUDGE & DATE OF DECISION	PLAINTIFF	COURT NO.	BASIS OF VALUATION	HELD VALUE	BASIS	PORT OF ENTRY AND MERCHANDISE
81/301	Watson, J. August 12, 1981	Geigy Chemical Corp.	R65/2662, etc.	United States value	U.S. selling prices, less 1% cash discount as determined by customs officer at time of appraisement; less 25.3% representing profit and general expenses usually made in U.S. on sales of dyestuffs of same class or kind; less costs of transportation and insurance from place of shipment to place of delivery in amounts determined by customs officer at time of appraisement; divided by 1.40 or such other factor applied by customs officer, to allow for customs duties payable on imported dyestuffs	U.S. v. Geigy Chemical Corporation et al. (C.A.D. 1155)	New York Benzenoid dyestuffs

R81/302	Watson, J. August 12, 1981	Geigy Chemical Corp.	R65/24007	United States value	U.S. selling prices, less 1% cash discount as determined by customs officer at time of appraisement; less 33.4% representing profit and general expenses usually made in U.S. on sales of dyestuffs of same class or kind; less costs of transportation and insurance from place of shipment to place of delivery in amounts determined by customs officer at time of appraisement; divided by 1.40 or such other factor applied by customs officer, to allow for customs duties payable on imported dyestuffs	U.S. v. Geigy Chemical Corporation et al. (C.A.D. 1155)	New York Benzenoid dyestuffs

DECISION NUMBER	JUDGE & DATE OF DECISION	PLAINTIFF	COURT NO.	BASIS OF VALUATION	HELD VALUE	BASIS	PORT OF ENTRY AND MERCHANDISE
R81/303	Watson, J. August 12, 1981	Geigy Chemical Corporation	R66/12629, etc.	United States value	U.S. selling prices, less 1% cash discount as determined by customs officer at time of appraisement; less 33.4% representing profit and general expenses usually made in U.S. on sales of dyestuffs of same class or kind; less costs of transportation and insurance from place of shipment to place of delivery in amounts determined by customs officer at time of appraisement; divided by 1.40 or such other factor applied by customs officer, to allow for customs duties payable on imported dyestuffs	U.S. v. Geigy Chemical Corporation et al. (C.A.D. 1155)	New York Benzenoid dyestuffs

R81/304	Watson, J. August 12, 1981	Geigy Chemical Corporation	R67/8258	United States value	U.S. selling prices, less 1% cash discount as determined by customs officer at time of appraisement; less 28.3% representing profit and general expenses usually made in U.S. on sales of dyestuffs of same class or kind, less costs of transportation and insurance from place of shipment to place of delivery in amounts determined by customs officer at time of appraisement; divided by 1.40 or such other factor applied by customs officer, to allow for customs duties payable on imported dyestuffs	U.S. v. Geigy Chemical Corporation et al. (C.A.D. 1155)	New York Benzenoid dyestuffs

DECISION NUMBER	JUDGE & DATE OF DECISION	PLAINTIFF	COURT NO.	BASIS OF VALUATION	HELD VALUE	BASIS	PORT OF ENTRY AND MERCHANDISE
R81/305	Watson, J. August 12, 1981	Geigy Chemical Corp.	R69/6519, etc.	United States value	U.S. selling prices, less 1% cash discount as determined by customs officer at time of appraisement; less 28.9% representing profit and general expenses usually made in U.S. on sales of dyestuffs of same class or kind; less costs of transportation and insurance from place of shipment to place of delivery in amounts determined by customs officer at time of appraisement; divided by 1.40 or such other factor applied by customs officer, to allow for customs duties payable on imported dyestuffs	U.S. v. Geigy Chemical Corporation et al. (C.A.D. 1155)	New York Benzenoid dyestuffs

R81/305	Watson, J. August 12, 1981	Geigy Chemical Corporation	R70/1625	United States value	U.S. selling prices, less 1% cash discount as determined by customs officer at time of appraisement; less 28.9% representing profit and general expenses usually made in U.S. on sales of dyestuffs of same class or kind; less costs of transportation and insurance from place of shipment to place of delivery in amounts determined by customs officer at time of appraisement; divided by 1.40 or such other factor applied by customs officer, to allow for customs duties payable on imported dyestuffs	U.S. v. Geigy Chemical Corporation et al. (C.A.D. 1155)	New York Benzenoid dyestuffs

DECISION NUMBER	JUDGE & DATE OF DECISION	PLAINTIFF	COURT NO.	BASIS OF VALUATION	HELD VALUE	BASIS	PORT OF ENTRY AND MERCHANDISE
R81/307	Watson, J. August 12, 1981	Geigy Chemical Corp.	R70/3911, etc.	United States value	U.S. selling prices, less 1% cash discount as determined by customs officer at time of appraisement; less 31.1% representing profit and general expenses usually made in U.S. on sales of dyestuffs of same class or kind; less costs of transportation and insurance from place of shipment to place of delivery in amounts determined by customs officer at time of appraisement; divided by 1.40 or such other factor applied by customs officer, to allow for customs duties payable on imported dyestuffs	U.S. v. Geigy Chemical Corporation et al. (C.A.D. 1155)	New York Benzenoid dyestuffs
R81/308	Watson, J. August 12, 1981	Rohner Gehrig & Co., Inc.	R66/25733, etc.	United States value	U.S. selling prices, less 1% cash discount as determined by customs officer at time of appraisement; less 25.7% representing profit and general expenses usually made	U.S. v. Geigy Chemical Corporation et al. (C.A.D. 1155)	New York Benzenoid dyestuffs

					in U.S. on sales of dyestuffs of same class or kind; less costs of transportation and insurance from place of shipment to place of delivery in amounts determined by customs officer at time of appraisement; divided by 1.40 or such other factor applied by customs officer, to allow for customs duties payable on imported dyestuffs		
R81/309	Newman, J. August 12, 1981	Bus and Truck Supply Co.	73-1-00076, etc.	Export value	Appraised values, less 10% (excluding from 10% deduction the value of any Michelin tires included in appraised values), less value of components of U.S. origin allowed on liquidation	Agreed statement of facts	Houston Inter-city passenger buses
R81/310	Newman, J. August 13, 1981	Elliot Knitwear Corp. Arthur J. Fritz & Co. of L.A.	R62/2654, etc.	Export value	F.o.b. unit invoice prices plus 20% of difference between f.o.b. unit invoice prices and appraised values	Agreed statement of facts	Los Angeles Sweaters and gloves
R81/311	Newman, J. August 13, 1981	Import Associates Inc.	80-12-00193	American selling price	$5.65 per pair, less 2% $5.35 (men's joggers) per pair, less 2% (boys' joggers)	Agreed statement of facts	Seattle Men's ("big boys") and boys' joggers

DECISION NUMBER	JUDGE & DATE OF DECISION	PLAINTIFF	COURT NO.	BASIS OF VALUATION	HELD VALUE	BASIS	PORT OF ENTRY AND MERCHANDISE
R81/312	Newman, J. August 13, 1981	Robert M. McCoy, a/c Bus and Truck Supply Co.	75-10-02572	Export value	Appraised values, less 10% (excluding from 10% deduction the value of any Michelin tires included in appraised values), less value of components of U.S. origin allowed on liquidation	Agreed statement of facts	Jacksonville Inter-city passenger buses
R81/313	Newman, J. August 13, 1981	Mitsubishi International Corporation	73-10-02875, etc.	American selling price	Appraised values less 23%, per pair	Agreed statement of facts	Boston Footwear
R81/314	Newman, J. August 13, 1981	Henry A. Wess, Inc.	284940-A, etc.	Export value	Appraised unit values, less 7.5%, net packed	Agreed statement of facts	Cincinnati Binoculars

R81/315	Newman, J. August 13, 1981	Henry A. Wess, Inc.	290741–A, etc.	Export value	Appraised unit values less 7.5%, net packed	Agreed statement of facts	Cincinnati Binoculars
R81/316	Newman, J. August 13, 1981	Henry A. Wess, Inc.	R58/23061, etc.	Export value	Appraised unit values less 7.5%, net packed	Agreed statement of facts	Cincinnati Prison binoculars
R81/317	Richardson, J. August 14, 1981	Mitsubishi International Corporation	72-12-02549, etc.	American selling price	Appraised values less 23%, per pair	Agreed statement of facts	Mobile Footwear
R81/318	Richardson, J. August 14, 1981	Mitsubishi International Corporation	73-4-01119, etc.	American selling price	Appraised values less 23%, per pair	Agreed statement of facts	Charleston Footwear
R81/319	Richardson, J. August 14, 1981	Mitsubishi International Corporation	73-5-01303, etc.	American selling price	Appraised values less 23%, per pair	Agreed statement of facts	San Francisco Footwear

International Trade Commission Notices

Investigations by the U.S. International Trade Commission

DEPARTMENT OF THE TREASURY, August 27, 1981.

The appended notices relating to investigations by the U.S. International Trade Commission are published for the information of Customs officers and others concerned.

WILLIAM T. ARCHEY,
Acting Commissioner of Customs.

In the Matter of
CERTAIN SURVEYING DEVICES } Investigation No. 337-TA-68

Notice of Issuance of Advisory Opinion

AGENCY: U.S. International Trade Commission.

ACTION: Issuance of an advisory opinion regarding scope of exclusion order.

SUMMARY: At the conclusion of the original investigation, the Commission determined that certain imported surveying devices infringed a United States patent in violation of 19 U.S.C. § 1337 and issued an order excluding infringing surveying devices. John Woods Survey Equipment, Ltd., the respondent in the original investigation, subsequently requested that the Commission issue an advisory opinion to the effect that Woods' recently modified device does not infringe the patent in question and is therefore not subject to the Commission's exclusion order. After receiving submissions from Woods and from Gammon Reel, the complainant in the original investigation, the Commission determined that an advisory opinion is appropriate, but the Woods' modified surveying device continues to infringe the patent in question and therefore remains subject to the Commission's exclusion order.

Copies of all non-confidential documents filed in connection with

this request for an advisory opinion are available for inspection during official business hours (8:45 a.m. to 5:15 p.m.) in the Office of the Secretary, U.S. International Trade Commission, 701 E Street NW., Washington, D.C. 20436, telephone 202–523–0161.

FOR FURTHER INFORMATION CONTACT: Scott Daniels, Esq., Office of the General Counsel, telephone 202–523–0480.

By order of the Commission.

Issued: August 18, 1981.

KENNETH R. MASON,
Secretary.

---

19 CFR Part 200

Amendment to Agency Ethics Rules

AGENCY: U.S. International Trade Commission.

ACTION: Final rule.

SUMMARY: The final rule published at 46 FR 41036 (August 14, 1981) contained no effective date. The effective date is the date of publication, August 14, 1981.

FOR FURTHER INFORMATION CONTACT: Michael H. Stein, Esq., General Counsel, USITC Ethics Counselor, 701 E Street NW., Washington, D.C. 20436, 202–523–0350.

By order of the Commission.

Issued: August 18, 1981.

KENNETH R. MASON,
Secretary.

(TA–503(a)–9 and 332–130)

PRESIDENT'S LIST OF ARTICLES WHICH MAY BE DESIGNATED AS ELIGIBLE ARTICLES FOR PURPOSES OF THE GENERALIZED SYSTEM OF PREFERENCES

AGENCY: United States International Trade Commission.

ACTION: In accordance with the provisions of sections 503(a) and 131(b) of the Trade Act of 1974 (19 U.S.C. 2463(a) and 2151(b)) (hereinafter referred to as "the Act") and section 332(g) of the Tariff Act of 1930 (19 U.S.C. 1332(g)), the Commission has instituted investigation Nos. TA–503(a)–9 and 332–130 for the purpose of

obtaining, to the extent practicable, information of the kind described in section 131(d) of the Act. This information is for use in connection with the preparation of advice requested by the U.S. Trade Representative (USTR) with respect to certain listed articles as to the probable economic effect on U.S. industries producing like or directly competitive articles and on consumers of the elimination of U.S. import duties under the United States Generalized System of Preferences (GSP), set forth in Title V of the Act.

EFFECTIVE DATE: August 14, 1981.

FOR FURTHER INFORMATION CONTACT:

(1) Agricultural products, Mr. Edward Furlow (202–724–0068).
(2) Textile products, Mr. Reuben Schwartz (202–523–0114).
(3) Chemical products, Dr. Aimison Jonnard (202–523–0423).
(4) Minerals and metals, Mr. Larry Brookhart (202–523–0275).
(5) Machinery and equipment, Mr. Aaron Chesser (202–523–0353).
(6) Miscellaneous manufactures, Mr. Walter Trezevant (202–724–1719).

All of the above are in the Commission's Office of Industries. For information on legal aspects of the investigation contact Mr. William Gearhart of the Commission's Office of the General Counsel at 202–523–0487.

SUPPLEMENTARY INFORMATION: On July 30, 1981, in accordance with sections 503(a) and 131(a) of the Act and pursuant to the authority of the President delegated to the USTR by Executive Order 11846, as amended by Executive Order 11947, the USTR furnished the United States International Trade Commission a list of items which may be designated as eligible articles for purposes of the GSP (see Annex I).

In providing its advice, the USTR requested the Commission to assume that benefits of the GSP would not apply to imports that would be excluded from receiving such benefits by virtue of the "competitive need" limitations specified in section 504(c) of the Act.

Section 504(d) of the Act exempts from one of the competitive-need limits in section 504(c) articles for which no like or directly competitive article was being produced in the United States on the date of enactment of the Act. Accordingly, pursuant to the authority of section 332(g) of the Tariff Act of 1930, and in conformity with the delegation of authority from the President to him of Executive Order 11846 as amended by Executive Order 11947, the USTR requested that the Commission also provide advice with respect to whether products like or directly competitive with any articles

contained in the TSUS(A) items in Annex I and also TSUS item 791.28 were being produced in the United States on January 3, 1975. A list giving detailed descriptions of the articles contained in the TSUS(A) items identified in Annex I is available upon request from the Secretary, U.S. International Trade Commission, 701 E Street NW., Washington, D.C. 20436 (202–523–5178).

The USTR announced the items which have been sent to the Commission for probable effects advice in the July 17, 1981 Federal Register (46 FR 37115).

Public Hearing

A public hearing in connection with the investigation will be held in the Commission Hearing Room, 701 E Street NW., Washington, D.C. 20436, beginning at 10:00 a.m., e.s.t., on November 3, 1981, to be continued on November 4, 1981, if required. All persons shall have the right to appear by counsel or in person, to present information, and to be heard. Requests to appear at the public hearing should be filed with the Secretary, United States International Trade Commission, 701 E Street NW., Washington, D.C. 20436, not later than noon, October 28, 1981.

Written Submissions

In lieu of or in addition to appearances at the public hearing, interested persons are invited to submit written statements concerning the investigation. Commercial or financial information which a submitter desires the Commission to treat as confidential must be submitted on separate sheets of paper, each clearly marked "Confidential Business Information" at the top. All submissions requesting confidential treatment must conform with the requirements of section 201.6 of the Commission's Rules of Practice and Procedure (19 CFR 201.6). All written submissions, except for confidential business information, will be made available for inspection by interested persons. To be ensured of consideration by the Commission, written statements should be submitted at the earliest practicable date, but no later than November 11, 1981. All submissions should be addressed to the Secretary at the Commission's office in Washington, D.C.

By order of the Commission.

Issued: August 17, 1981.

KENNETH R. MASON,
Secretary.

Attachment.

ANNEX I.—*Articles being considered for designation as eligible for purposes of the GSP*

TSUS or TSUSA item	TSUS or TSUSA item	TSUS or TSUSA item	TSUS or TSUSA item
114. 20	146. 76	360. 4645	452. 34
121. 40	148. 00	363. 90	452. 44
121. 61	148. 17	364. 07(pt.) [4]	455. 04
121. 63	148. 60	387. 35(pt.) [5]	522. 61
135. 12	148. 93	402. 56	606. 22
135. 14	148. 98	402. 80	606. 42
135. 16	148. 9820	402. 80(pt.)	642. 1110
135. 92(pt.) [1]	150. 02	403. 45	652. 94
136. 20	152. 30	403. 45(pt.)	652. 95
136. 22	152. 7640	403. 56(pt.) [6]	652. 96
136. 60	153. 0420	405. 08(pt.) [7]	685. 27
136. 61	154. 90	405. 60(pt.) [8]	685. 36
137. 10	161. 57	406. 28	706. 13
137. 50	161. 84	406. 36	706. 17(pt.)
137. 63	161. 88	406. 64	706. 2045
137. 89	168. 78	406. 84	706. 6235
138. 4250(pt.) [2]	169. 04	411. 64	737. 2205
140. 40	183. 01	412. 34	737. 2240
140. 65	190. 85	412. 34(pt.) [3]	760. 0520
140. 75(pt.) [3]	222. 50	432. 25	772. 48
141. 82	355. 65	436. 00	772. 57
141. 87	355. 6510	437. 47	
144. 12	360. 4640	452. 28	

[1] Only cucumbers entered during the period from March 1 to April 30, inclusive, in any year.
[2] Only mixtures of pea pods and sliced water chestnuts.
[3] Only other vegetables, reduced to flour, except tomato flour.
[4] Only certified and hand-loomed jacquard-figured cotton tapestries.
[5] Only sisal baskets.
[6] Only tetrabromobisphenol A.
[7] Only D(-)-para-hydroxyphenylglycine.
[8] Only benzene acetonitrile.
[9] Only flat goods of rattan or of palm leaf.

Investigation No. 731–TA–49 (Preliminary)

FIREPLACE MESH PANELS FROM TAIWAN

AGENCY: United States International Trade Commission.

ACTION: Institution of Preliminary Antidumping Investigation.

SUMMARY: The U.S. International Trade Commission hereby gives notice of the institution of investigation No. 731–TA–49 (Preliminary) to determine whether there is a reasonable indication that an industry

in the United States is materially injured, or is threatened with material injury, or the establishment of an industry in the United States is materially retarded by reason of imports from Taiwan of fireplace mesh panels which are allegedly sold, or likely to be sold, in the United States at less than fair value (LTFV). For the purposes of this investigation, fireplace mesh panels are defined as precut, flexible mesh panels, both finished and unfinished, which are constructed of interlocking spirals of steel wire and are of a kind used in the manufacture of safety screening by U.S. manufacturers of fireplace accessories and wood-burning stoves. Fireplace mesh panels are provided for either in item 642.87 or item 654.00 of the Tariff Schedules of the United States depending on their stage of processing.

EFFECTIVE DATE: August 13, 1981.

FOR FURTHER INFORMATION CONTACT: Ms. Vera A. Libeau, Office of Investigations, U.S. International Trade Commission, Room 339, 701 E Street NW., Washington, D.C. 20436; telephone 202–523–0368.

SUPPLEMENTARY INFORMATION: On August 10, 1981, petitions were simultaneously filed with the U.S. Department of Commerce and the U.S. International Trade Commission by International Management Service Associates, Inc. alleging that fireplace mesh panels from Taiwan are being sold in the United States at LTFV and that an industry in the United States is being materially injured, or threatened with material injury, by reason of such imports. Accordiugly, pursuant to section 733(a) of the Tariff Act of 1930 (19 U.S.C. § 1673b(a)), the Commission is instituting preliminary antidumping investigation No. 731–TA–49 (Preliminary) to determine whether a reasonable indication of such injury exists. The Commission must make its determination within 45 days after the date on which the petition was received, or in this case by September 24, 1981. The investigation will be conducted according to the provisions of part 207, subpart B, of the Commission's Rules of Practice and Procedure (19 CFR § 207).

Written Submissions: Any person may submit to the Commission a written statement of information pertinent to the subject of the investigation. A signed original and nineteen (19) true copies of each submission must be filed at the Office of the Secretary, U.S. International Trade Commission Building, 701 E Street NW., Washington, D.C. 20436, on or before September 8, 1981. All written submissions except for confidential business data will be available for public inspection.

Any business information for which confidential treatment is desired shall be submitted separately. The envelope and all pages of such submissions must be clearly labeled "Confidential Business Information."

Confidential submissions and requests for confidential treatment must conform with the requirements of section 201.6 of the Commission's Rules of Practice and Procedure (19 CFR § 201.6).

For further information concerning the conduct of the investigation and rules of general application, consult the Commission's Rules of Practice and Procedure, part 207, subparts A and B (19 CFR § 207), and part 201, subparts A through E (19 CFR § 201).

Conference: The Director of Operations of the Commission has scheduled a conference in connection with this investigation for 10 a.m., e.d.t., on Wednesday, September 4, 1981, at the U.S. International Trade Commission Building. Parties wishing to participate in the conference should contact the supervisory investigator for this investigation, Ms. Vera A. Libeau (202–523–0368). It is anticipated that parties in support of the petition for the imposition of antidumping duties and parties opposed to such petition will each be collectively allocated one (1) hour within which to make an oral presentation at the conference. Further details concerning the conduct of the conference will be provided by the supervisory investigator.

Inspection of the Petition: The petition filed in this case is available for public inspection at the office of the Secretary, U.S. International Trade Commission.

This notice is published pursuant to section 207.12 of the Commission's Rules of Practice and Procedure (19 CFR § 207.12).

By order of the Commission.

Issued: August 13, 1981.

KENNETH R. MASON,
Secretary.

TA–131(b)–7

PROBABLE ECONOMIC EFFECTS OF POSSIBLE TARIFF REDUCTIONS UNDER SECTION 123 OF THE TRADE ACT OF 1974

AGENCY: United States International Trade Commission.

ACTION: In accordance with the provisions of section 131(b) of the Trade Act of 1974 (hereinafter referred to as "the Act"), the Commission has instituted investigation No. TA–131(b)–7 for the purpose of obtaining, to the extent practicable, information of the kind described in section 131(b) of the Act. This information is for use in connection with the preparation of advice requested by the U.S. Trade Representative (USTR) with respect to certain articles as to the probable economic effect on U.S. industries producing like or directly competitive articles, and on consumers, of the temporary

reduction of U.S. duties by the maximum amount permissible under the authority of section 123 of the Act. The investigation covers the following list of items of the Tariff Schedules of the United States:

TSUS item	TSUS item	TSUS item	TSUS item
112.03	252.35	543.11	685.60
112.40	256.10	544.51	708.23
112.62	308.66	632.34	710.65
112.94	316.50	644.11	722.04
124.30	374.15	649.67	722.72
124.40	385.90	649.83	723.32
124.80	420.06	650.21	725.05
145.52	425.94	651.23	725.07
154.50	426.82	653.37	730.05
161.07	437.70	653.45	745.34
161.71	450.20	653.80	750.60
220.36	455.02	654.20	750.70
220.47	460.15	656.25	773.05
220.48	473.40	656.30	
222.20	511.11	657.70	
222.25	512.41	676.20	

EFFECTIVE DATE: August 12, 1981.

FOR FURTHER INFORMATION CONTACT:

(1) Agricultural products, Mr. Edward Furlow (202–724–0068).
(2) Textile products, Mr. Reuben Schwartz, (202–523–0114).
(3) Chemical products, Dr. Aimison Jonnard (202–523–0423).
(4) Minerals and metals, Mr. Larry Brookhart (202–523–0275).
(5) Machinery and equipment, Mr. Aaron Chesser (202–523–0353).
(6) Miscellaneous manufactures, Mr. Walter Trezevant (202–724–1719).

All of the above are in the Commission's Office of Industries. For information on legal aspects of the investigation contact Mr. William Gearhart of the Commission's Office of the General Counsel at 202–523–0487.

SUPPLEMENTARY INFORMATION: On July 30, 1981, in accordance with section 131(a) of the Act and pursuant to the authority of the President delegated to the USTR by Executive Order 11846, as amended by Executive Order 11947, the USTR furnished the United States International Trade Commission with a list of articles which may be considered in international trade negotiations for the purpose of granting new temporary concessions as compensation for U.S. actions pursuant to Article XIX of the General Agreement on Tariffs and Trade (GATT). The USTR published

the list of articles in the August 5, 1981, Federal Register (46 FR 39926).

Public Hearing

A public hearing in connection with the investigation will be held in the Commission Hearing Room, 701 E Street NW., Washington, D.C. 20436, beginning at 10:00 a.m., e.d.t., on September 23, 1981, to be continued on September 24, 1981, if required. All persons shall have the right to appear by counsel or in person, to present information, and to be heard. Requests to appear at the public hearing should be filed with the Secretary, United States International Trade Commission, 701 E Street NW., Washington, D.C. 20436, not later than noon, September 17, 1981.

Written Submissions

In lieu of or in addition to appearances at the public hearing, interested persons are invited to submit written statements concerning the investigation. Commercial or financial information which a submitter desires the Commission to treat as confidential must be submitted on separate sheets of paper, each clearly marked "Confidential Business Information" at the top. All submissions requesting confidential treatment must conform with the requirements of section 201.6 of the Commission's Rules of Practice and Procedure (19 CFR 201.6). All written submissions, except for confidential business information, will be made available for inspection by interested persons.

To be assured of consideration by the Commission, written statements should be submitted at the earliest practicable date, but no later than October 2, 1981. All submissions should be addressed to the Secretary at the Commission's office in Washington, D.C.

By order of the Commission.

Issued: August 17, 1981.

KENNETH R. MASON,
Secretary.

In the Matter of
CERTAIN AIRLESS PAINT SPRAY PUMPS AND COMPONENTS THEREOF } Investigation No. 337–TA–90

Commission Hearing on the Presiding Officer's Recommendation and on Relief, Bonding, and the Public Interest, and the Schedule for Filing Written Submissions

AGENCY: U.S. International Trade Commission.

ACTION: The scheduling of a public hearing and written submissions in investigation No. 337–TA–90, Certain Airless Paint Spray Pumps and Components Thereof.

Notice is hereby given that the presiding officer has issued a recommended determination that there is a violation of section 337 of the Tariff Act of 1930, 19 U.S.C. 1337, in the unauthorized importation into the United States and sale of certain airless paint spray pumps that are the subject of the Commission's investigation. Accordingly, the recommended determination and the record of the hearing have been certified to the Commission for review and a Commission determination. Interested persons may obtain copies of the nonconfidential version of the presiding officer's recommendation (and all other public documents on the record of the investigation) by contacting the Office of the Secretary, U.S. International Trade Commission, 701 E Street NW., Room 161, Washington, D.C. 20436, telephone 202–523–0161.

COMMISSION HEARING: The Commission will hold a public hearing on September 17, 1981, in the Commission's Hearing Room, 701 E Street NW., Washington, D.C. 20436, beginning at 10:00 a.m. The hearing will be divided into two parts. First, the Commission will hear oral arguments on the presiding officer's recommended determination that a violation of section 337 of the Tariff Act of 1930 exists. Second, the Commission will hear presentations concerning appropriate relief, the effect that such relief would have upon the public interest, and the proper amount of the bond during the Presidential review period in the event that the Commission determines that there is a violation of section 337 and that relief should be granted. These matters will be heard on the same day in order to facilitate the completion of this investigation within time limits established under law and to minimize the burden of this hearing upon the parties.

ORAL ARGUMENTS: Any party to the Commission's investigation or any interested Government agency may present an oral argument concerning the presiding officer's recommended determination. That portion of a party's or an agency's total time allocated to oral argument may be used in any way the party or agency making argument sees fit, i.e., a portion of the time may be reserved for rebuttal or devoted to summation. The oral arguments will be held in the following order: complainant, respondents, Government agencies, and the Commission investigative attorney. Any rebuttals will be held in this order: respondents, complainant, Government agencies, and the Commission investigative attorney. Persons making oral argument are reminded that such argument must be based upon the evidentiary record certified to the Commission by the presiding officer.

ORAL PRESENTATIONS ON RELIEF, BONDING, AND THE PUBLIC INTEREST: Following the oral arguments on the presiding officer's recommendation, parties to the investigation, Government agencies, public-interest groups, and interested members of the public may make oral presentations on the issues of relief, bonding, and the public interest. This portion of the hearing is quasi-legislative in nature; presentations need not be confined to the evidentiary record certified to the Commission by the presiding officer, and may include the testimony of witnesses. Oral presentations on relief, bonding, and the public interest will be heard in the some order as oral arguments on the recommended determination.

If the Commission finds that a violation of section 337 has occurred, it may issue (1) an order which could result in the exclusion of the subject articles from entry into the United States and/or (2) an order which could result in one or more respondents being required to cease and desist from engaging in unfair methods of competition or unfair acts in the importation and sale of such articles. Accordingly, the Commission is interested in hearing presentations which address the form of relief, if any, which should be ordered.

If the Commission concludes that a violation of section 337 has occurred and contemplates some form of relief, it must consider the effect of that relief upon the public interest. The factors which the Commission will consider include the effect that an exclusion order and/or a cease and desist order would have upon (1) the public health and welfare, (2) competitive conditions in the U.S. economy, (3) the U.S. production of articles which are like or directly competitive with those which are the subject of the investigation, and (4) U.S. consumers.

If the Commission finds that a violation of section 337 has occurred and orders some form of relief, the President has 60 days to approve or disapprove the Commission's action. During this period, the subject articles would be entitled to enter the United States under a bond in an amouut determined by the Commission and prescribed by the Secretary of the Treasury. The Commission is therefore interested in hearing presentations concerning the amount of the bond, if any, which should be imposed.

TIME LIMIT FOR ORAL ARGUMENT AND ORAL PRESENTATIONS: Parties and Government agencies will be limited to a total of 30 minutes (exclusive of time consumed by questions from the Commission or its advisory staff) for making both oral argument

on violation and oral presentations on remedy, bonding, and the public interest. Persons making only oral presentations on remedy, bonding, and the public interest will be limited to 10 minutes (exclusive of time consumed by questions from the Commission and its advisory staff). The Commission may in its discretion expand the aforementioned time limits upon receipt of a timely request to do so.

WRITTEN SUBMISSIONS: In order to give greater focus to the hearing, the parties to the investigation and interested Government agencies are encouraged to file briefs on the issues of violation (to the extent they have not already briefed that issue in their written exceptions to the presiding officer's recommended determination), remedy, bonding, and the public interest. The complainant and the Commission investigative attorney are also requested to submit a proposed exclusion order and/or a proposed cease and desist order for the Commission's consideration. Persons other than the parties and Government agencies may file written submissions addressing the issues of remedy, bonding, and the public interest. Written submissions on the question of violation must be filed not later than the close of business on August 24, 1981; written submissions on the questions of remedy, bonding and public interest must be filed not later than the close of business on August 31, 1981. During the course of the hearing, the parties may be asked to file posthearing briefs.

NOTICE OF APPEARANCE: Written requests to appear at the Commission hearing must be filed with the Office of the Secretary by August 24, 1981.

ADDITIONAL INFORMATION: The original copy and 11 true copies of all briefs on violation must be filed with the Office of the Secretary not later than August 24, 1981; the original copy and 11 true copies of all briefs on remedy, bonding and public interest must be filed with the Office of the Secretary not later than August 31, 1981. Any person desiring to discuss confidential information, or to submit a document (or a portion thereof) to the Commission in confidence, must request in camera treatment unless the information has already been granted such treatment by the presiding officer. All such requests should be directed to the Secretary to the Commission and must include a full statement of the reasons why the Commission should grant such treatment. Documents or arguments containing confidential information approved by the Commission for in camera treatment will be treated accordingly. All nonconfidential written submissions will be available for public inspection at the Secretary's Office.

Notice of this investigation was published in the Federal Register of November 21, 1980. 45 FR 77190.

352-987 O - 81 - 2

FOR FURTHER INFORMATION CONTACT: Scott Daniels, Esq., Office of the General Counsel, U.S. International Trade Commission, telephone 202–523–0480.

By order of the Commission.

Issued: August 14, 1981.

KENNETH R. MASON,
Secretary.

Notice of Termination of Investigation No. 731–TA–45 (Preliminary)

CERTAIN STEEL WIRE NAILS FROM JAPAN

AGENCY: United States International Trade Commission.

ACTION: Termination of preliminary antidumping investigation.

EFFECTIVE DATE: August 14, 1981.

FOR FURTHER INFORMATION CONTACT: Mr. Lynn Featherstone, Office of Investigations, (202) 523–0242.

SUPPLEMENTARY INFORMATION: On July 2, 1981, the Commission received advice from the U.S. Department of Commerce that it was initiating an antidumping investigation concerning imports of certain steel wire nails from Japan. Accordingly, the Commission instituted a preliminary antidumping investigation to determine whether there is a reasonable indication that an industry in the United States is materially injured, or is threatened with material injury, or the establishment of an industry in the United States is materially retarded by reason of imports from Japan of steel wire nails, provided for in items 646.25 and 646.26 of the Tariff Schedules of the United States, which are possibly sold at less than fair value.

On August 11, 1981, the Commission received advice from the Department of Commerce that it was terminating its investigation concerning certain steel wire nails from Japan because sales below trigger prices ceased substantially prior to the initiation of the investigation and because Commerce received assurances from the Japanese manufacturers that all sales of the product for a two year period will be at prices at or above the relevant trigger price. Accordingly, the Commission's investigation concerning these products from Japan is hereby terminated.

Issued: August 14, 1981.

KENNETH R. MASON,
Secretary.

In the Matter of CERTAIN CARD DATA IMPRINTERS AND COMPONENTS THEREOF	Investigation No. 337–TA–104

Notice of Grant of Leave To Review Order No. 4 and of Affirmance of Order No. 4

AGENCY: U.S. International Trade Commission.

ACTION: Grant of application for review of Order No. 4 and affirmance of Order No. 4.

SUMMARY: Notice is hereby given that on the basis of an application for interlocutory review filed by parties respondents National Business Systems, Inc. (Canada), and National Business Systems, Inc. (U.S.), the Commission has granted the application for review of and affirmed the presiding officer's denial of a motion by those respondents to suspend the above-captioned investigation.

AUTHORITY: The authority for the Commission's action is contained in section 337 of the Tariff Act of 1930 (19 U.S.C. 1337) and in section 210.60(b) (19 CFR 210.60(b)) of the Commission's Rules of Practice and Procedure.

SUPPLEMENTARY INFORMATION: Upon receipt of a complaint filed by AM International, Inc., and Bartizan Corporation (collectively AM) the Commission instituted investigation No. 337–TA–104 on May 7, 1981, to determine whether there is a violation of section 337 of the Tariff Act of 1930 by reason of unfair methods of competition and unfair acts in the importation and sale of card data imprinters, alleged to infringe claim 7 of U.S. Letters Patent 3,272,120 (the '120 patent) and claim 12 of U.S. Letters Patent 3,340,800. Notice of the Commission's investigation was published in the Federal Register on June 12, 1981 (46 FR 31094).

Respondents National Business Systems, Inc. (Canada), and National Business Systems, Inc. (U.S.) (collectively NBS) moved (Motion No. 104–4) on June 15, 1981, to suspend this investigation because (1) complainant AM had filed an application with the Patent and Trademark Office to reissue the '120 patent, and (2) all of the patent issues in the investigation were being litigated in Federal court cases in Illinois and Colorado. The presiding officer denied the motion (Order No. 4), but granted respondents leave to file an interlocutory appeal with the Commission.

FOR FURTHER INFORMATION CONTACT: Joann P. DiGennaro, Esq., Office of the General Counsel, U.S International Trade Commission; telephone 202–523–0143.

By order of the Commission.

Issued: August 13, 1981.

KENNETH R. MASON,
Secretary.

In the Matter of CERTAIN STABILIZED HULL UNITS AND COMPONENTS THEREOF AND SONAR UNITS UTILIZING SAID STABILIZED HULL UNITS	Investigation No. 337–TA–103

Notice of Amendment of Complaint

AGENCY: U.S. International Trade Commission.

ACTION: Granting of motion to amend complaint.

SUMMARY: Notice is hereby given that on the basis of a motion filed by complainant Western Marine Inc. (WESMAR) (Motion 103–1), the Commission has allowed amendment of the complaint in order to describe more clearly the allegedly infringing device of respondents' Furuno U.S.A. and Furuno Japan and to show how that device allegedly infringes certain claims of U.S. Letters Patent 3,553,638.

AUTHORITY: The authority for Commission disposition of the subject motion is contained in section 337 of the Tariff Act of 1930 (19 U.S.C. § 1337) and in section 210.22(a) (19 CFR 210.22(a)) of the Commission's Rules of Practice and Procedure.

SUPPLEMENTARY INFORMATION: Upon receipt of a complaint filed by WESMAR, the Commission voted to institute investigation No. 337–TA–103 on June 1, 1981, in order to determine whether there is a violation of section 337 of the Tariff Act of 1930 by reason of the importation into and sale in the United States of certain stabilized hull units and components thereof and sonar units utilizing said stabilized hull units. Complainant WESMAR alleges that the accused stabilized hull units and components thereof infringe claims 1, 11, 12, and 14 of U.S. Letters Patent 3,553,638 and that the components of the allegedly infringing device contribute to the infringement of said claims. Notice of the Commission's investigation was published in the Federal Register on June 10, 1981. (46 FR 30737.)

On July 7, 1981, WESMAR moved to amend the complaint (Motion

103–1) to describe more accurately the respondents' device and to show how that device allegedly infringes WESMAR's patent. Respondents opposed the motion to amend.

On July 15, 1981, the presiding officer issued and certified to the Commission a recommended determination (Order No. 3) that the motion to amend the complaint be granted.

FOR FURTHER INFORMATION CONTACT: William E. Perry, Esq., Office of the General Counsel, U.S. International Trade Commission, telephone 202–523–1693.

By order of the Commission.

Issued: August 13, 1981.

KENNETH R. MASON,
Secretary.

In the Matter of CERTAIN HOT AIR CORN POPPERS AND COMPONENTS THEREOF	Investigation No. 337–TA–101

Notice of Intervention and Amendment of Notice of Investigation to include Intervenor As An Additional Party Respondent

AGENCY: U.S. International Trade Commission.

ACTION: Granting of motion to intervene and amendment of notice of investigation to include General Electric Company, Housewares & Audio Business Division, 1285 Boston Ave., Bridgeport, Conn. 06602, as an additional party respondent.

AUTHORITY: This investigation is being conducted under the authority of subsection (b) of section 337 of the Tariff Act of 1930 (19 U.S.C. § 1337(b)). Section 210.6 of the Commission's Rules of Practice and Procedure (19 CFR 210.6) requires any person desiring to intervene in an investigation to file a motion setting forth a sufficient basis for such intervention. It also provides that, upon a showing of good cause, any interested person may be designated as a party. Amendment of the notice of investigation is governed by sections 210.22 of the Commission's rules (19 CFR 210.22) (incorporating section 210.20(d) (19 CFR 210.20(d)).

SUPPLEMENTARY INFORMATION: The Commission is conducting investigation No. 337–TA–101 in order to determine whether there is a violation of section 337 in the importation of certain hot air corn poppers and components thereof into the United States, or in the sale of such articles, which are alleged to infringe claims 1, 2, 3, and 5 of U.S. Letters Patent 4,178,843 with the effect or tend-

ency to destroy or substantially injure an industry, efficiently and economically operated, in the United States. These proceedings were initiated on the basis of an amended complaint filed on behalf of the assignee of the patent, Wear-Ever Aluminum, Inc. (Wear-Ever), a wholly-owned subsidiary of the Aluminum Company of America (ALCOA).

The notice instituting the investigation and defining its scope was published in the Federal Register on May 22, 1981 (46 FR 28043). The parties named as respondents included Yamada Electric Industries, Ltd. (Yamada) of Tokyo, Japan and Chiap Hua Clocks and Watches Ltd. (Chiap Hua) of Hong Kong—two foreign firms which produce the allegedly infringing apparatus and supply it to domestic distributors. The other respondents named included five domestic firms which the complainant has accused of importing and selling the subject merchandise—The West Bend Company, A Division of Dart Industries Inc. (West Bend),[1] Sunbeam Corp. (Sunbeam), Maxim Associates Corp. (Maxim), K Mart Corp. (K Mart), and The Stop & Shop Companies, Inc. (Stop & Shop).

On June 25, 1981, the General Electric Company (General Electric) filed a motion to intervene as a respondent in the investigation (Motion No. 101–4) by reason of the fact that, through its Housewares and Audio Business Division, General Electric has imported the allegedly infringing corn poppers produced by respondent Yamada and has sold such apparatus to respondents K Mart and Stop & Shop. Respondents Chiap Hua and West Bend subsequently filed responses indicating that they did not oppose the motion. On July 14, 1981, the presiding officer issued an order recommending that General Electric be added as a respondent.

Upon consideration of the motion to intervene (No. 101–4), the movant's proposed response to the complaint and notice of investigation, the recommendation of the presiding officer, and all other documents on the record developed in this investigation, on August 14, 1981, the Commission decided to grant Motion No. 101–4 and to deem the previously-issued notice of investigation amended to include the intervenor, General Electric, as an additional party respondent.

Copies of the Commission's Action and Order, as well as all other nonconfidential documents on the record of this investigation, are available for public inspection during official business hours (8:45 a.m. to 5:15 p.m.) in the Office of the Secretary, U.S. International Trade Commission, 701 E St. NW., Room 156, Washington, D.C. 20436, telephone 202–523–0471.

---

[1] The notice listed West Bend as "The West Bend Co., Inc." However, by a letter dated July 28, 1981 in-house patent counsel advised the Commission that West Bend is a division of Dart Industries Inc. and not a corporation. For that reason, the previous notation is incorrect.

FOR FURTHER INFORMATION CONTACT: P. N. Smithey, Esq., Office of the General Counsel, U.S. International Trade Commission, 701 E St. NW., Room 224, Washington, D.C. 20436, telephone 202–523–0350.

By order of the Commission.

Issued: August 17, 1981.

KENNETH R. MASON,
Secretary.

Index

U.S. Customs Service

	T.D. No.
Treasury Decisions:	
Bonds:	
Carriers	81-221
Instruments of international traffic	81-220
Customs interpretation of court ruling: Fabrics, coated or filled	81-219
Restrictions on entry:	
Cotton textiles:	
Pakistan	81-224
Philippines	81-223
Manmade fibers:	
Colombia	81-225
India	81-226
Synopses of drawback decisions	81-222
United States-Canada Albacore Tuna Treaty	81-227

DEPARTMENT OF THE TREASURY
U.S. CUSTOMS SERVICE
WASHINGTON, D.C. 20229

OFFICIAL BUSINESS
PENALTY FOR PRIVATE USE, $300

POSTAGE AND FEES PAID
DEPARTMENT OF THE TREASURY (CUSTOMS)
(TREAS. 552)

U.S. GOVERNMENT PRINTING OFFICE : 1981

15/37

Customs Bulletin

Regulations, Rulings, Decisions, and Notices concerning Customs and related matters

and Decisions

of the United States Court of Customs and Patent Appeals and the United States Court of International Trade

NEWARK PUBLIC LIBRARY

OCT 1 1981

U. S. GOVT. PUBS.
DEPOSITORY 376

Vol. 15 SEPTEMBER 16, 1981 No. 37

This issue contains

T.D. 81-228 Through 81-236
C.S.D. 81-191 Through 81-210
Proposed Rule
Recent Unpublished Customs Service Decisions
C.A.D. 1269
Appeal No. 81-8
Slip Op. 81-75
Protest Abstracts P81/146 Through P81/150
Reap Abstracts R81/320 Through R81/322
International Trade Commission Notices

THE DEPARTMENT OF THE TREASURY
U.S. Customs Service

T 1.11/3:

NOTICE

The abstracts, rulings, and notices which are issued weekly by the U.S. Customs Service are subject to correction for typographical or other printing errors. Users may notify the U.S. Customs Service, Logistics Management Division, Washington, D.C. 20229, of any such errors in order that corrections may be made before the bound volumes are published.

For sale by the Superintendent of Documents, U.S. Government Printing Office, Washington, D.C. 20402. Price: $2.25 (single copy domestic); $2.85 (single copy foreign). Subscription price: $85.00 a year domestic; $106.25 a year foreign.

U.S. Customs Service

Treasury Decisions

(T.D. 81-228)

Bonds

Approval and discontinuance of Carrier's Bonds, Customs Form 3587

Bonds of carriers for the transportation of bonded merchandise have been approved or discontinued as shown below. The symbol "D" indicates that the bond previously outstanding has been discontinued on the month, day, and year represented by the figures which follow. "PB" refers to a previous bond, dated as represented by figures in parentheses immediately following, which has been discontinued. If the previous bond was in the name of a different company or if the surety was different, the information is shown in a footnote at the end of the list.

Dated: August 26, 1981.

Name of principal and surety	Date of bond	Date of approval	Filed with district director/area director/amount
ACME Fast Freight, Inc., 2335 New Hyde Park Rd., New Hyde Park, NY; motor carrier; Peerless Ins. Co. (PB 8/2/78) D 7/20/81 [1]	July 15, 1981	July 20, 1981	St. Louis, MO $25,000
Argo Transport Co., Ltd., 1570 Montarville, Boucherville, P.Q., Canada; motor carrier; The Continental Ins. Co.	Sept. 24, 1980	Apr. 30, 1981	Ogdensburg, NY $50,000
Atlantic Gulf Transport, Inc., 1325 N.W. 32nd Ave., Miami, FL; motor carrier; Fidelity & Deposit Co. of MD	May 26, 1981	July 6, 1981	Miami, FL $25,000
Briggs Transportation Co., 2360 W. County Rd C, St. Paul, MN; motor carrier; Fireman's Fund Ins. Co. D 7/19/81	May 21, 1970	May 26, 1970	Minneapolis, MN $25,000
Buckeye Pipe Line Co., P.O. Box 368, Emmaus, PA; pipe line; American Casualty Co. of Reading, PA (PB 6/24/66) D 6/9/81 [2]	June 9, 1981	June 9, 1981	New York Seaport $50,000

See footnotes at end of table.

Name of principal and surety	Date of bond	Date of approval	Filed with district director/area director/amount
John Cassidy & Sons, Inc., 7301 N.W. 36th Court, Miami, FL; motor carrier; Peerless Ins. Co.	June 24, 1981	July 17, 1981	Miami, FL $25,000
Collins Moving Systems, Inc., 904 W. Morgan St., Kokomo, IN; motor carrier; Fidelity & Deposit Co. of MD	June 29, 1981	July 20, 1981	Cleveland, OH $50,000
Edgar M. Douthitt dba: EMD, 520 27th Ave., NE, Great Falls, MT; motor carrier; St. Paul Fire & Marine Ins. Co. D 7/3/81	Dec. 19, 1978	Dec. 20, 1978	Great Falls, MT $25,000
The A.W. Fenton Co., Inc., 6565 Eastland Rd., Cleveland, OH; freight forwarder; St. Paul Fire & Marine Ins. Co.	July 7, 1981	July 8, 1981	Cleveland, OH $100,000
Global Moving & Storage, Inc., dba: Global Freight Container Service, 7901 First Ave., Seattle, WA; motor carrier; National Surety Corp.	May 1, 1981	July 16, 1981	Seattle, WA $25,000
Inco Express, Inc., 3600 S. 124th, Seattle, WA; motor carrier; St. Paul Fire & Marine Ins. Co.	May 21, 1981	June 17, 1981	Seattle, WA $50,000
Howard Martin, Inc., 3101 New Haven Ave., Fort Wayne, IN; motor carrier; U.S. Fidelity & Guaranty Co. D 7/14/81	Jan. 14, 1972	Feb. 4, 1972	Cleveland, OH $35,000
Mercury Tanklines Ltd., Box 3500, Calgary, Alberta, Canada; motor carrier; Great American Ins. Co. D 2/25/72	Mar. 31, 1970	Feb. 26, 1971	Great Falls, MT $90,000
Northwestern Trucking Inc., 26807 Carnaby Way, Kent, WA; motor carrier; Washington International Ins. Co.	May 28, 1981	July 9, 1981	Seattle, WA $25,000
P&D Transportation, Inc., Connell Highway, Newport, RI; motor carrier; The Home Indemnity Co. D 7/17/81	Aug. 28, 1968	Nov. 5, 1968	Providence, RI $40,000
Piggyback Transportation Service, Inc., 3000 S. Shelby St., P.O. Box 662, Greenwood, IN; motor carrier; Mid-Century Ins. Co.	June 29, 1981	July 8, 1981	Cleveland, OH $50,000
Rapid Air Freight, Inc., Akron-Canton Airport, North Canton, OH; motor carrier; The Buckeye Union Ins. Co. (PB 2/4/77) D 7/27/81	July 7, 1981	July 27, 1981	Cleveland, OH $50,000
Rogers & Brown Custom Brokers, Inc., P.O. Box 937, Greer, SC; motor carrier; American Motorists Ins. Co.	July 8, 1981	July 20, 1981	Charleston, SC $50,000
Armando S. Saenz, 806 N. Cage, Pharr, TX; motor carrier; Lawyers Surety Corp. D 7/21/81	Oct. 20, 1975	Nov. 3, 1975	Laredo, TX $25,000

See footnotes at end of table.

Name of principal and surety	Date of bond	Date of approval	Filed with district director/area director/amount
Sharron Motor Lines, Inc., 3730 First Ave., S. Birmingham, AL; motor carrier; Aetna Casualty & Surety Co.	July 28, 1981	Aug. 3, 1981	Mobile, AL $25,000
Thames Valley Trucking Inc., P.O. Box 190, Parkhill, Ontario, Canada; motor carrier; Hartford Fire Ins. Co.	Jan. 30, 1981	July 27, 1981	Detroit, MI $50,000
Towpich Express Lines, Ltd., 2840 58th Ave., S.E., Calgary, Alberta, Canada; motor carrier; Royal Ins. Co. of America	May 13, 1981	July 24, 1981	Great Falls, MT $25,000
Transport Robert (1973) Ltd., 130 1st Ave., C.P. 39, Rougemont, P.Q., Canada; motor contract carrier; The Continental Ins. Co.	May 12, 1980	Apr. 27, 1981	Ogdensburg, NY $25,000
Westfair Air Services, Inc., 575 Connecticut Ave., Norwalk, CT; motor carrier; Bridgeport, CT; St. Paul Fire & Marine Ins. Co. D 9/4/74	Apr. 13, 1969	Apr. 21, 1969	Bridgeport, CT $25,000
Withers Transfer & Storage of Coral Gables, Inc., 357 Almeria Ave., Coral Gables, FL; motor carrier; Fidelity & Deposit Co. of MD	Dec 17, 1980	July 17, 1981	Miami, FL $25,000

[1] Surety is Sentry Ins. a Mutual Co.

[2] Principal is Buckeye Pipe Line Co. and Long Island Pipe Line Corp.; Surety is Federal Ins. Co.

BON-3-03

GEORGE C. STEUART
(For Marilyn G. Morrison, Director,
Carriers, Drawbacks and Bonds Divisions).

(T.D. 81-229)

Cotton and Manmade Fiber Textile Products—Restriction on Entry

Restriction on entry of cotton and manmade fiber textile products manufactured or produced in Sri Lanka

There is published below a directive of April 2, 1981, received by the Commissioner of Customs from the Chairman, Committee for the Implementation of Textile Agreements, concerning restriction on entry of cotton and manmade fiber textile products in certain categories manufactured or produced in Sri Lanka. This directive amends, but does not cancel, that Committee's directive of September 9, 1980 (T.D. 80-258).

This directive was published in the Federal Register on April 10, 1981 (46 FR 21407), by the Committee.

(QUO-2-1)

Dated: August 31, 1981.

WILLIAM D. SLYNE
(For Richard R. Rosettie, Actirg Director,
Duty Assessment Division).

U.S. DEPARTMENT OF COMMERCE,
INTERNATIONAL TRADE ADMINISTRATION,
Washington, D.C., April 9, 1981.

Committee for the Implementation of Textile Agreements

COMMISSIONER OF CUSTOMS,
Department of the Treasury,
Washington, D.C.

DEAR MR. COMMISSIONER: On September 9, 1980, the Chairman, Committee for the Implementation of Textile Agreements directed you to prohibit entry during the twelve-month period beginning on May 1, 1980 and extending through April 30, 1981 of cotton and man-made fiber textile products, produced or manufactured in Sri Lanka, in excess of designated levels of restraint. The Chairman further advised you that the levels of restraint are subject to adjustment.[1]

Under the terms of the Arrangement Regarding International Trade in Textiles done at Geneva on December 20, 1973, as extended on December 15, 1977; pursuant to the Bilateral Cotton, Wool and Man-Made Fiber Textile Agreement of July 7, 1980, between the Governments of the United States and Sri Lanka; and in accordance with the provisions of Executive Order 11651 of March 3, 1972, as amended by Executive Order 11951 of January 6, 1977, you are directed to prohibit, effective on April 13, 1981 and for the twelve-month period beginning on May 1, 1980 and extending through April 30, 1981, entry into the United States for consumption and withdrawal from warehouse for consumption of cotton and man-

---

[1] The term "adjustment" refers to those provisions of the Bilateral Cotton, Wool and Man-Made Fiber Textile Agreement of July 7, 1980, between the Governments of the United States and Sri Lanka, which provide, in part, that: (1) specific limits may be exceeded by not more than seven percent of their square yards equivalent total in any agreement period and sublimits of specific ceilings may be exceeded by not more than ten percent within the overall specific limits; (2) specific limits and sublimits may be increased for carryover and carryforward up to 11 percent of the applicable category limit or sublimit; and (3) administrative arrangements or adjustments may be made to resolve minor problems arising in the implementation of the agreement.

made fiber textile products in Categories 348 and 340/341/640/641, produced or manufactured in Sri Lanka, in excess of the following, adjusted levels of restraint:

Category		*Adjusted 12-mo level of restraint* [1]
348	226,000	dozen.
340/341/640/641	1,132,814	dozen of which not more than 385,000 dozen shall be in Cat. 340; not more than 360,000 dozen shall be in Cat. 341; not more than 80,000 dozen shall be in Cat. 640; and not more than 342,814 dozen shall be in Cat. 641.

The actions taken with respect to the Government of Sri Lanka and with respect to imports of cotton and man-made fiber textile products from Sri Lanka have been determined by the Committee for the Implementation of Textile Agreements to involve foreign affairs functions of the United States. Therefore, these directions to the Commission of Customs, which are necessary for the implementation of such actions, fall within the foreign affairs exception to the rule-making provisions of 5 U.S.C. 553. This letter will be published in the Federal Register.

Sincerely,

PAUL T. O'DAY
Chairman, Committee for the Implementation of Textile Agreements.

(T.D. 81-230)

Cotton, Wool and Manmade Fiber Textile Products—Restriction on Entry

Restriction on entry of cotton, wool, and manmade fiber textile products manufactured or produced in Korea

There is published below a directive of August 11, 1981, received by the Commissioner of Customs from the Chairman, Committee for the Implementation of Textile Agreements, concerning restriction on entry of cotton, wool, and manmade fiber textile products in certain categories manufactured or produced in Korea. This directive

[1] The levels of restraint have not been adjusted to account for any imports after April 30, 1980.

amends, but does not cancel, that Committee's directive of December 23, 1980 (T.D. 81–134).

This directive was published in the Federal Register on August 14, 1981 (46 FR 41128), by the Committee.

(QUO–2–1)

Dated: August 31, 1981.

WILLIAM D. SLYNE,
(For Richard R. Rosettie, Acting Director,
Duty Assessment Division).

U.S. DEPARTMENT OF COMMERCE,
INTERNATIONAL TRADE ADMINISTRATION,
Washington, D.C., August 11, 1981.

Committee for the Implementation of Textile Agreements

COMMISSIONER OF CUSTOMS,
DEPARTMENT OF THE TREASURY,
Washington, D.C.

DEAR MR. COMMISSIONER: On December 24, 1980, the Chairman, Committee for the Implementation of Textile Agreements, directed you to prohibit entry for consumption, or withdrawal from warehouse for consumption during the twelve-month period beginning on January 1, 1981 and extending through December 31, 1981 of cotton, wool and man-made fiber textile products in certain specified categories, produced or manufactured in the Republic of Korea, in excess of designated levels of restraint. The Chairman further advised you that the levels of restraint are subject to adjustment.[1]

Under the terms of the Arrangement Regarding International Trade in Textiles done at Geneva on December 20, 1973, as extended on December 15, 1977; pursuant to the Bilateral Cotton, Wool and Man-Made Fiber Textile Agreement of December 23, 1977, as amended, between the Governments of the United States and the Republic of Korea; and in accordance with the provisions of Executive Order 11651 of March 3, 1972, as amended by Executive Order 11951 of January 6, 1977, you are directed to prohibit, effective on August 17, 1981, to amend the twelve-month levels of restraint established

[1] The term "adjustment" refers to those provisions of the Bilateral Cotton, Wool and Man-Made Fiber Textile Agreement of December 23, 1977, as amended, between the Governments of the United States and the Republic of Korea, which provide, in part, that (1) within the aggregate and applicable group limits, specific levels of restraint may be exceeded by designated percentages; (2) these same levels may be increased for carryover and carryforward up to 11 percent of the applicable category limit; (3) administrative arrangements or adjustments may be made to resolve minor problems arising in the implementation of the agreement.

best copy available

for Group I (Categories 300–320, 330, 360–369, 600–627, 630 and 665–669) and Categories 444, 640pt., and 641 to the following:

Category	*Amended 12-mo level of restraint* [2]	
300–320, 330, 360–369, and 600–627, 630, 665–669	162,478,778	square yards equivalent. [3]
444	4,531	dozen.
640 [2]	1,678,668	dozen.
641	1,044,513	dozen.

You are further directed, effective on August 17, 1981, to amend the directive of December 24, 1980 to prohibit entry for consumption, or withdrawal from warehouse for consumption, of textile products in Categories 353/354/653/654, produced or manufactured in the Republic of Korea and exported during the twelve-month period which began on January 1, 1981 in excess of 206,908 dozen.[4]

Textile products in Categories 353/354/653/654 which have been exported to the United States prior to January 1, 1981, shall not be subject to this directive.

Textile products in Categories 353/354/653/654 which have been released from the custody of the U.S. Customs Service under the provisions of 19 U.S.C. 1448(b) or 1484(a)(1)(A) prior to the effective date of this directive shall not be denied entry under this directive.

In carrying out the above directions, the Commissioner of Customs should construe entry into the United States for consumption to include entry for consumption into the Commonwealth of Puerto Rico.

The actions taken with respect to the Government of the Republic of Korea and with respect to imports of cotton, wool and man-made fiber textile products from the Republic of Korea have been determined by the Committee for the Implementation of Textile Agreements to involve foreign affairs functions of the United States. Therefore, these directions to the Commissioner of Customs, which are necessary for the implementation of such actions, fall within the foreign affairs exception to the rule-making provisions of 5 U.S.C. 553. This letter will be published in the Federal Register.

Sincerely,

PAUL T. O. DAY,
Chairman, Committee for the Implementation of Textile Agreements.

---

[2] The levels of restraint have not been adjusted to reflect any imports after December 31, 1980.
[3] In Category 640, all TSUSA numbers except 380.0455, 380.8431 and 380.8433.
[4] The level of restraint has not been adjusted to reflect any imports after December 31, 1980.

352-988 O - 81 - 2

(T.D. 81-231)

Cotton and Manmade Fiber Textile Products—Restrictions on Entry

Restriction on entry of cotton and manmade fiber textile products manufactured or produced in Sri Lanka

There is published below a directive of April 27, 1981, received by the Commissioner of Customs from the Chairman, Committee for the Implementation of Textile Agreements, concerning restriction on entry of cotton and manmade fiber textile products in specified categories manufactured or produced in Sri Lanka.

This directive was published in the Federal Register on May 1, 1981 (46 FR 24618), by the Committee.

(QUO-2-1)

Dated: August 31, 1981.

WILLIAM D. SLYNE,
(For Richard R. Rosettie, Acting Director,
Duty Assessment Division).

U.S. DEPARTMENT OF COMMERCE,
INTERNATIONAL TRADE ADMINISTRATION,
Washington, D.C., April 27, 1981.

Committee for the Implementation of Textile Agreements

COMMISSIONER OF CUSTOMS,
Department of the Treasury,
Washington, D.C.

DEAR MR. COMMISSIONER: Under the terms of the Arrangement Regarding International Trade in Textiles done at Geneva on December 20, 1973, as extended on December 15, 1977; pursuant to the Bilateral Cotton, Wool and Man-Made Fiber Textile Agreement of July 7, 1980, as amended, between the Governments of the United States and Sri Lanka, and in accordance with the provisions of Executive Order 11651 of March 3, 1972, as amended by Executive Order 11951 of January 6, 1977, you are directed to prohibit, effective on May 1, 1981 for the twelve-month period extending through April 30, 1982 entry into the United States for consumption and withdrawal from warehouse for consumption of cotton and man-made fiber textile products in Categories 331, 334, 335, 340, 341, 348, 640 and 641 in excess of the following levels of restraint:

Category	*12-mo level of restraint*	
331	749,000	dozen pairs.
334	146,000	dozen.
335	107,000	dozen.
340/341/640/641	1,230,500	dozen of which not more than 374,500 dozen shall be in Category 340; not more than 385,200 dozen shall be in Category 341; not more than 85,600 dozen shall be in Category 640; and not more than 385,200 dozen shall be in Category 641.
348	202,000	dozen.

In carrying out this directive, entries of textile products in the foregoing categories, except Category 334, which have been exported to the United States on and after May 1, 1980 and extending through April 30, 1981, shall, to the extent of any unfilled balances, be charged against the levels of restraint established for such goods during the twelve-month period which began on May 1, 1980 and extended through April 30, 1981. In the event that the levels of restraint established for that period have been exhausted by previous entries, such goods shall be subject to the levels set forth in this letter. Textile products in Category 334 which have been exported before May 1, 1981 shall not be subject to this directive.

Cotton textile products in Category 334 which have been released from the custody of the U.S. Customs Service under the provisions of 19 U.S.C. 1448(b) or 1484(a)(1)(A) prior to the effective date of this directive shall not be denied entry under this directive.

The levels set forth above are subject to adjustment in the future according to the provisions of the bilateral agreement of July 7, 1980, as amended, between the Governments of the United States and Sri Lanka, which provide, in part, that: (1) specific limits may be exceeded by not more than 7 percent of their square yards equivalent total in any agreement period and sublimits of specific ceilings may be exceeded by not more than 10 percent within the overall specific limit; (2) specific limits may be increased for carryover and carryforward up to 11 percent of the applicable category limit or sublimit; and (3) administrative arrangements or adjustments may be made to resolve minor problems arising in the implementation of the agreement. Any appropriate adjustments under the provisions of the bilateral agreement, referred to above, will be made to you by letter.

A detailed description of the textile categories in terms of T.S.U.S.A. numbers was published in the Federal Register on February 28, 1980 (45 FR 13172), as amended on April 23, 1980 (45 FR 27463), August 12, 1980 (45 FR 53506), and December 24, 1980 (45 FR 85142).

In carrying out the above directions, entry into the United States for consumption shall be construed to include entry for consumption into the Commonwealth of Puerto Rico.

The actions taken with respect to the Government of Sri Lanka and with respect to imports of cotton and man-made fiber textile products from Sri Lanka have been determined by the Committee for the Implementation of Textile Agreements to involve foreign affairs functions of the United States. Therefore, the directions to the Commissioner of Customs, which are necessary for the implementation of such actions, fall within the foreign affairs exception to the rulemaking provisions of 5 U.S.C. 553. This letter will be published in the Federal Register.

Sincerely,

PAUL T. O'DAY,
Chairman, Committee for the
Implementation of Textile Agreements.

(T.D. 81-232)

Manmade Fiber Textile Products—Restriction on Entry

Restriction on entry of manmade fiber textile products manufactured or produced in Costa Rica

There is published below a directive of August 13, 1981, received by the Commissioner of Customs from the Chairman, Committee for the Implementation of Textile Agreements, concerning restriction on entry of manmade fiber textile products in category 649 manufactured or produced in Costa Rica. This directive amends, but does not cancel, that Committee's directive of November 21, 1980 (T.D. 81-25).

This directive was published in the Federal Register on August 18, 1981 (46 FR 41839), by the Committee.

(QUO-2-1)

Dated: August 31, 1981.

WILLIAM D. SLYNE,
(For Richard R. Rosettie, Acting Director,
Duty Assessment Division).

U.S. DEPARTMENT OF COMMERCE,
INTERNATIONAL TRADE ADMINISTRATION,
Washington, D.C., August 13, 1981.

Committee for the Implementation of Textile Agreements

COMMISSIONER OF CUSTOMS,
Department of the Treasury,
Washington, D.C.

DEAR MR. COMMISSIONER: On November 21, 1980, the Chairman of the Committee for the Implementation of Textile Agreements directed you to prohibit entry for consumption or withdrawal from warehouse for consumption during the twelve-month period beginning on January 1, 1981 and extending through December 31, 1981, of man-made fiber textile products in Category 649, produced or manufactured in Costa Rica, in excess of a designated level of restraint. The Chairman further advised you that the level of restraint is subject to adjustment.[1]

Under the terms of the Arrangement Regarding International Trade in Textiles done at Geneva on December 20, 1973, as extended on December 15, 1977; pursuant to the Bilateral Cotton, Wool and Man-Made Fiber Textile Agreement of September 22, 1980, between the Governments of the United States and Costa Rica; and in accordance with the provisions of Executive Order 11651 of March 3, 1972, as amended by Executive Order 11951 of January 6, 1977, you are directed to reduce, effective on August 13, 1981, the twelve-month level of restraint established by Category 649 to 1,607,732 dozen.[2]

The actions taken with respect to the Government of Costa Rica and with respect to imports of man-made fiber textile products from Costa Rica have been determined by the Committee for the Implementation of Textile Agreements to involve foreign affairs functions of the United States. Therefore, these directions to the Commissioner of Customs, which are necessary for the implementation of such actions, fall within the foreign affairs exception to the rule-making provisions of 5 U.S.C. 553. This letter will be published in the Federal Register.

Sincerely,

PAUL T. O'DAY,
Chairman, Committee for the
Implementation of Textile Agreements.

---

[1] The term "adjustment" refers to those provisions of the Bilateral Cotton, Wool and Man-Made Fiber Textile Agreement of September 22, 1980 between the Governments of the United States and Costa Rica, which provide, in part, that: (1) the specific limit may be increased for carryover and carryforward up to 11 percent of the applicable category limit; and (2) administrative arrangements or adjustments may be made to resolve minor problems arising in the implementation of the agreement.

[2] The level of restraint has not been adjusted to reflect any imports after December 31, 1980.

(T.D. 81-233)

Cotton and Wool Textile Products—Restriction on Entry

Restriction on entry of cotton and wool textile products manufactured or produced in Macau

There is published below a directive of August 12, 1981, received by the Commissioner of Customs from the Chairman, Committee for the Implementation of Textile Agreements, concerning restriction on entry of cotton and wool textile products in certain categories manufactured or produced in Macau. This directive amends, but does not cancel, that Committee's directive of December 8, 1980 (T.D. 81-128).

This directive was published in the Federal Register on August 18, 1981 (46 FR 41838), by the Committee.

(QUO-2-1)

Dated: August 31, 1981.

WILLIAM D. SLYNE,
(For Richard R. Rosettie, Acting Director,
Duty Assessment Division).

U.S. DEPARTMENT OF COMMERCE,
INTERNATIONAL TRADE ADMINISTRATION,
Washington, D.C., August 12, 1981.

Committee for the Implementation of Textile Agreements

COMMISSIONER OF CUSTOMS,
Department of the Treasury,
Washington, D.C.

DEAR MR. COMMISSIONER: On December 8, 1980, the Chairman, Committee for the Implementation of Textile Agreements, directed you to prohibit entry during the twelve-month period beginning on January 1, 1981 and extending through December 31, 1981 of cotton, wool and man-made fiber textile products, produced or manufactured in Macau, in excess of designated levels of restraint. The Chairman further advised you that the levels of restraint are subject to adjustment.[1]

---

[1] The term "adjustment" refers to those provisions of the Bilateral Cotton, Wool and Man-Made Fiber Textile Agreement of November 29 and December 18, 1979, as amended, between the Governments of the United States and Portugal, which provide, in part, that: (1) within the aggregate and group limits; specific levels of restraint may be exceeded by designated percentages; (2) these levels may also be increased for carryover and carryforward up to 11 percent of the applicable category limits; and (3) administrative arrangements or adjustments may be made to resolve minor problems arising in the implementation of the agreement.

Under the terms of the Arrangement Regarding International Trade in Textiles done at Geneva on December 20, 1973, as extended on December 15, 1977; pursuant to the Bilateral Cotton, Wool and Man-Made Fiber Textile Agreement of November 29 and December 18, 1979, as amended, between the Governments of the United States and Portugal; and in accordance with the provisions of Executive Order 11651 of March 3, 1972, as amended by Executive Order 11951 of January 6, 1977, you are directed to prohibit, effective on August 13, 1981 and for the twelve-month period beginning on January 1, 1981 and extending through December 31, 1981, entry into the United States for consumption and withdrawal from warehouse for consumption of cotton and wool textile products in Categories 347/348 and 445/446, produced or manufactured in Macau, in excess of the following levels of restraint:

Category	*Adjusted 12-mo level of restraint* [1]
347/348	298,844 dozen
445/446	72,064 dozen

The actions taken with respect to the Government of Portugal and with respect to imports of cotton and wool textile products from Macau have been determined by the Committee for the Implementation of Textile Agreements to involve foreign affairs functions of the United States. Therefore, these directions to the Commissioner of Customs, which are necessary for the implementation of such actions, fall within the foreign affairs exception to the rule-making provisions of 5 U.S.C. 553. This letter will be published in the Federal Register.

Sincerely,

PAUL T. O'DAY
Chairman, Committee for the Implementation of Textile Agreements.

(T.D. 81-234)

Drawback Contract (Rate) under 19 U.S.C. 1313(a)

There follows an approved drawback contract (rate). Any person who can comply with the conditions of the contract may, with the agreement of the Regional Commissioner, adhere to it by notifying him in writing of its intention to do so and providing him with the following information:

1. Name and address of claimant;
2. List of imported merchandise used and articles manufactured;

[1] The levels of restraint have not been adjusted to reflect any imports after December 31, 1980.

3. Factories which will operate under the contract;

4. If a corporation, the names of officers or persons with power of attorney who will sign drawback documents on behalf of adherent; and

5. If the Regional Commissioner has doubts as to whether the conversion of the imported merchandise into the articles to be exported is a manufacturing operation, he should require adherent to give details of the operation.

This contract is designed to simplify drawback procedures.

Date: August 31, 1981.

GEORGE C. STEUART
(For Marilyn G. Morrison, Director,
Carriers, Drawback and Bonds Division).

DRAWBACK CONTRACT UNDER 19 U.S.C. 1313(a)

IMPORTED MERCHANDISE OR DRAWBACK PRODUCTS USED

Imported merchandise (or drawback products) is used in the manufacture of the exported articles upon which drawback claims will be based.

EXPORTED ARTICLES ON WHICH DRAWBACK WILL BE CLAIMED

Exported articles on which drawback will be claimed will be manufactured in the United States using imported merchandise or (drawback products).

PROCESS OF MANUFACTURE

The imported merchandise will be used to manufacture new and different articles, having distinctive names, characters, and/or uses.

MULTIPLE PRODUCTS—RELATIVE VALUES

Not applicable.

LOSS OR GAIN

We agree to keep records showing the extent of any loss or gain in net weight or measurement of the imported merchandise, caused by atmospheric conditions, chemical reactions, or other factors.

STOCK IN PROCESS

Stock in process does not result; or if it does result, details will be given in claims as filed, and it will not be included in the computation

of the merchandise used to manufacture the finished articles on which drawback is claimed.

WASTE

We understand that no drawback is payable on any waste which results from the manufacturing operation. Unless the claim for drawback is based on the quantity of merchandise appearing in the exported articles, we agree to keep records to establish the value, the quantity, and the disposition of any waste that results from manufacturing the exported articles. If no waste results, we agree to keep records to establish that fact.

PROCEDURES AND RECORDS MAINTAINED

We agree to maintian records to establish:

1. That the exported articles on which drawback is claimed were manufactured with the use of the imported merchandise; and
2. The quantity of imported merchandise we used in manufacturing the exported articles; or the quantity of imported merchandise appearing in the exported articles we manufactured when claims are on an appearing in basis.

We realize that to obtain drawback the claimant must establish that the completed articles were exported within five years after importation of the imported merchandise.

Our records establishing our compliance with these requirements will be available for audit by Customs during business hours. We understand that drawback is not payable without proof of compliance.

INVENTORY PROCEDURES

Our inventory procedures will show how we will satisfy the legal requirements discussed under the heading PROCEDURES AND RECORDS MAINTAINED. We understand that if our records do not show that we satisfy those requirements, drawback cannot be paid.

BASIS OF CLAIM FOR DRAWBACK

Drawback may be claimed on the quantity of merchandise used in manufacturing the exported articles only if there is no waste in the manufacturing operation.

If there is no waste or if the manufacturer does not keep records of any waste involved, drawback may be claimed on the quantity of eligible merchandise that appears in the exported articles.

352-988 O - 81 - 3

If there is valuable waste recovered from the manufacturing operation and records are kept which show the quantity and value of the waste, drawback may be claimed on the quantity of eligible merchandise used to manufacture the exported articles less the amount of that merchandise which the value of the waste would replace.

AGREEMENTS

We specifically agree that we will:

1. Comply fully with the terms of this statement when claiming drawback;

2. Open our factory and records for examination at all reasonable hours by authorized Government officers;

3. Keep our drawback related records and supporting data for at least 3 years from the date of payment of any drawback claim predicated in whole or in part upon this statement;

4. Keep this statement current by reporting promptly to the regional commissioner who liquidates the claims any changes in the number or location of our offices or factories, the corporate name, or the corporate organization by succession or reincorporation;

5. Keep a copy of this statement on file for ready reference by employees and require all officials and employees concerned to familiarize themselves with the provisions of this statement; and

6. Issue instructions to ensure proper compliance with title 19, United States Code, section 1313 (a) and (i), part 22 of the Customs Regulations, and this statement.

(T.D. 81-235)

Foreign Currencies—Daily Rates for Countries Not on Quarterly List

The Federal Reserve Bank of New York, pursuant to section 522(c), Tariff Act of 1930, as amended (31 U.S.C. 372(c)), has certified buying rates for the dates and foreign currencies shown below. The rates of exchange, based on these buying rates, are published for the information and use of Customs officers and others concerned pursuant to Part 159, Subpart C, Customs Regulations (19 CFR 159, Subpart C).

Argentina peso:	
August 10-13, 1981	$0.000203
August 14, 1981	.000197
Chile peso:	
August 10-14, 1981	$0.025575

Colombia peso:	
August 10–13, 1981	$0.018403
August 14, 1981	.018242
Greece drachma:	
August 10, 1981	$0.015898
August 11, 1981	.015873
August 12, 1981	.016124
August 13, 1981	.016287
August 14, 1981	.016103
Indonesia rupiah:	
August 10–14, 1981	$0.001582
Israel shekel:	
August 10–12, 1981	$0.081900
August 13–14, 1981	.080000
Peru sol:	
August 10–13, 1981	$0.002299
August 14, 1981	.002287
South Korea won:	
August 10–14, 1981	$0.001454

(LIQ–03–01 O:C:E)

Date: August 14, 1981.

KENNETH A. RICH,
Acting Chief,
Customs Information Exchange.

(T.D. 81–236)

Foreign Currencies—Variances From Quarterly Rate

The following rates of exchange are based upon rates certified to the Secretary of the Treasury by the Federal Reserve Bank of New York, pursuant to Section 522(C), Tariff Act of 1930, as amended (31 U.S.C. 372(c)), and reflect variances of 5 per centum or more from the quarterly rate published in Treasury Decision 81–183 for the following countries. Therefore, as to entries covering merchandise exported on the dates listed, whenever it is necessary for Customs purposes to convert such currency into currency of the United States, conversion shall be at the following rates.

Austria schilling:	
August 10, 1981	$0.055279
August 11, 1981	.055432
August 12–14, 1981	Quarterly

Belgium franc:	
August 10, 1981	$0.023764
August 11, 1981	.023844
August 12–14, 1981	Quarterly
Brazil cruziero:	
August 10–14, 1981	$0.010090
Denmark krone:	
August 10, 1981	$0.123686
August 11, 1981	.124131
August 12–14, 1981	Quarterly
France franc:	
August 10, 1981	$0.162522
August 11, 1981	.162760
August 12, 1981	Quarterly
August 13–14, 1981	$0.165426
Hong Kong dollar:	
August 10, 1981	$0.167056
August 11, 1981	.167364
August 12–13, 1981	.168067
August 14, 1981	.168209
India rupee:	
August 10, 1981	$0.107991
August 11, 1981	.108225
August 12, 1981	.109769
August 13–14, 1981	Quarterly
Ireland pound:	
August 10, 1981	$1.4170
August 11, 1981	1.4265
August 12–14, 1981	Quarterly
Italy lira:	
August 10, 1981	$0.000789
August 11, 1981	.000790
August 12–13, 1981	Quarterly
August 14, 1981	.000792
Netherlands guilder:	
August 10, 1981	$0.350079
August 11, 1981	.351927
August 12–14, 1981	Quarterly
Portugal escudo:	
August 10, 1981	$0.014793
August 11, 1981	.014749

Republic of South Africa rand:	
August 10, 1981	$1.0412
August 11, 1981	1.0419
August 12, 1981	1.0580
August 13, 1981	1.0526
August 14, 1981	1.0488
Spain peseta:	
August 10, 1981	$0.009766
August 11, 1981	.009759
August 12–13, 1981	Quarterly
August 14, 1981	$0.009839
Sweden krone:	
August 10, 1981	$0.185065
August 11–14, 1981	Quarterly
Switzerland franc:	
August 10, 1981	$0.454545
August 11, 1981	.455581
August 12–13, 1981	Quarterly
August 14, 1981	.457457
Thailand baht (tical)	
August 10–14, 1981	$0.043384
United Kingdom pound:	
August 10, 1981	$1.7710
August 11, 1981	1.7760
August 12, 1981	Quarterly
August 13, 1981	1.8040
August 14, 1981	1.8020

(LIQ-03-01 O:C:E)

Date: August 14, 1981.

KENNETH A. RICH,
Acting Chief,
Customs Information Exchange.

U.S. Customs Service

Customs Service Decisions

DEPARTMENT OF THE TREASURY,
OFFICE OF THE COMMISSIONER OF CUSTOMS,
Washington, D.C., August 27, 1981.

The following are decisions made by the United States Customs Service where the issues involved are of sufficient interest or importance to warrant publication in the CUSTOMS BULLETIN.

DONALD W. LEWIS,
Director,
Office of Regulations and Rulings.

(C.S.D. 81-191)

Subject: Classification: Those Costs Incurred by a U.S. Parent Company Which Are, and Which Are Not Eligible for Consideration as Dutiable Assists Under the TAA of 1979

Date: February 4, 1981
File: 542144

This is in reference to your letter dated May 29, 1980, in which you asked whether certain costs incurred by your company will be considered dutiable assists under section 402, Tariff Act 1930, as amended by the Trade Agreements Act (TAA) of 1979.

You advise that the merchandise entered through the port of Del Rio, Texas, under item 807.00, Tariff Schedules of the United States (TSUS); that your assembly plant is located in Acuna, Mexico; and that most of purchasing, receiving inspection, warehousing, production control, design engineering, accounting, and sales functions are located in your corporate headquarters in Illinois.

A number of employees working at the Mexican plant live in the United States, and are paid in U.S. dollars from the corporate headquarters in Illinois. You ask whether the salaries of these people

should be added to the transaction price. The positions of the employees are the General Manager, Production Manager, Quality Control Manager, Production Foreman, Production Engineer, Engineer Manager, and New Production Design Engineer.

It is apparent from the described facts that the personnel involved are employees of the parent company in the United States. You advise that under the old law, the salary costs were treated as assists and became part of the cost of production of the product assembly in Mexico.

You assume that your merchandise will be appraised on the basis of transaction value. Under transaction value the value of any assist will be added to the price paid or payable for the merchandise.

An "assist" is defined as certain specified items that the buyer of imported merchandise provides directly or indirectly, and free of charge or at reduced cost, for use in the production or the sale for exportation to the United States of the imported merchandise. Included among such items are "Engineering, development, art work, design work, and plans and sketches undertaken outside the United States." However, such work will not be treated as an assist if the service or work is (1) performed by a person domiciled within the United States; (2) performed while that person is acting as an employee or agent of the buyer of the imported merchandise; (3) is incidental to other engineering, development, art work, design work, or plans and sketches undertaken within the United States.

We wish to emphasize at this point that if a cost item is not specifically included within the assist definition, it cannot be treated as an assist. In the instant case, if any of the subject employees are engaged in Mexico in an assist activity, that part of their salary attributable to the activity would be considered an assist. It appears from the description of their positions that the Engineering Manager and New Product Design Engineer may be involved in the type of assist activity described. If so, their salaries are includable in the cost of the assist. However, an exception may be applicable if the service or work "is incidental to other engineering, development, art work, design work, or plans and sketches undertaken within the United States." Your request does not contain sufficient information for us to make any determination in this regard.

You also ask whether the cost of "procurement assists" such as purchasing, receiving inspection, warehousing, and transporting component parts from your plant in Illinois to the Mexican facility should be added to the purchase price of such component parts. These parts are purchased in the United States and are either of foreign or United States origin for use in assembling the merchandise in Mexico.

We assume for these purposes that the components themselves are furnished free of charge or at reduced cost to the Mexican assembler. Under these circumstances, the components are included within the assist definition as "Materials, components, parts, and similar items included in the imported merchandise."

In determining the value of an assist, there must be added (1) the cost of acquiring the assist, if acquired by the importer from an unrelated seller; and (2) the cost of transporting the assist to the place of production, including the cost of freight and insurance.

In our opinion, the cost of acquiring an assist is limited to the purchase price if purchased from an unrelated party. Accordingly, the cost of procuring the assist is not to be included in its value. Neither are receiving inspection and warehousing costs. Actual transportation costs are part of the value of the assist.

(C.S.D. 81–192)

Foreign Trade Zone: Whether Privilege Status Can Be Granted to Foreign Merchandise in a Foreign Trade Zone After It Has Been Manipulated or Manufactured

Date: March 6, 1981
File: 212224 K

Issue: After foreign common parts are used in a foreign trade zone to manufacture two different articles subject to different rates of duty, may an inventory computer printout be used to automatically convert the nonprivileged foreign status of a sufficient number of parts to privileged foreign status in order to obtain the most advantageous rates of duty.

Facts: Certain passenger automobiles are dutiable at the rate of 2.9 percent ad valorem while certain trucks are dutiable at the rate of 25 percent ad valorem. Foreign parts that are common to both automobiles and trucks are subject to rates of duty much lower than 25 percent and somewhat higher than 2.9 percent.

Upon admission into a foreign trade zone, foreign parts common to automobiles and trucks are declared as nonprivileged foreign merchandise to cover production of automobiles, and to obtain the rate of 2.9 percent when the automobiles are sent from the zone to the Customs territory. In the case of trucks assembled in the zone with the use of foreign parts and sent into the Customs territory, the importer wants the privilege to have the parts classified as parts

with lower rates of duty for parts than the higher rate of duty for trucks.

To accomplish this, the assembler in the zone declares on Customs Form 214 the estimated planned production of trucks for a following week and requests permission to apply privileged foreign status to existing nonprivileged foreign inventories for parts sufficient to assemble the estimated number of trucks. No further description of the common parts is given until after the assembly operation is completed. A report would then show in detail the common parts used to assemble the estimated number of trucks and would automatically convert the nonprivileged foreign status of the parts used to privilege foreign status. Under this system, the parts used to assemble automobiles would be dutiable at the low rate of duty for automobiles and the parts used to assemble trucks would be dutiable at rates of duty for parts rather than the higher rate of duty for trucks.

Law and analysis: Under section 81c., title 19, United States Code, foreign merchandise may be brought into a foreign trade zone without being subject to the Customs laws of the United States. The foreign merchandise may be used in the zone in an assembly operation or otherwise manipulated or manufactured. However, "when foreign merchandise is so sent from a zone into the Customs territory of the United States, it shall be subject to the laws and regulations of the United States affecting imported merchandise." Imported merchandise is classifiable in the Tariff Schedules of the United States, (TSUS) in its condition as imported. Thus, automobiles or trucks assembled in a zone with the use of foreign parts are classifiable as automobiles or trucks when sent into the Customs territory of the United States.

However, the first proviso of section 81c., in compliance with applicable regulations, sets forth certain requisites to permit an importer the privilege to have the tariff classification, and rates of duty for foreign merchandise (parts) determined and fixed in its condition as admitted into the zone rather than in its condition as sent into the Customs territory. The law requires that the privilege shall be requested and that the appropriate Customs officer shall take under supervision any lot or part of a lot of foreign merchandise and cause it to be appraised and taxes determined and duties liquidated thereon *before manipulation or manufacture effecting a change in the tariff classification.* The procedure used by the assembler-importer to obtain the privilege as described above does not conform to requirements of the law.

352-988 O - 81 - 4

Holding: A request for privilege status for foreign merchandise in a zone cannot be granted after the merchandise has been manipulated or manufactured so as to effect a change in the tariff classification of the merchandise.

(C.S.D. 81-193)

Classification: The Dutiable Status of Childs/Misses "Kung Fu" Shoes Imported After July 1, 1981

Date: March 10, 1981
File: CLA-2-07:S:C:D6:67-93
800123

In a letter dated February 6, 1981, you inquired as to the dutiable status of childs/misses "Kung Fu" shoes manufactured in People's Republic of China. You are aware that these shoes are presently classified in item 700.60, Tariff Schedules of the United States, and dutiable at the rate of 20 percent ad valorem, but you wish to know the new Tariff Schedule item number and rate of duty on this type of footwear which will be applicable July 1, 1981.

A sample of the "Kung Fu" shoe was submitted. This shoe has a canvas upper with an instep strap and a flat rubber sole. You state that this is a cemented shoe. The FOB price of this shoe is approximately $1.60 per pair.

Examination reveals that this is a string lasted injection molded shoe. Injection molded footwear is footwear where the complete sole and heel unit have been simultaneously molded and attached to an assembled upper in an injection molding machine whereas cement footwear is footwear having soles which are affixed to the upper *exclusively* (*emphasis* supplied) with an adhesive.

Injection molded "Kung Fu" shoes, exported on or after July 1, 1981, are classifiable under the provision for footwear which is over 50 percent by weight of fibers and rubber or plastics with at least 10 percent by weight being rubber or plastics and having uppers of which not over 50 percent of the exterior surface area is leather and not over 90 percent of the exterior surface area is rubber or plastics; footwear which is not designed to protect against water, oil, grease, or chemicals or cold or inclement weather; footwear not having open toes or open heels; footwear not of the slip-on type; footwear not having soles which are affixed to the upper exclusively with an adhesive; footwear which is valued not over $3.00 per pair in item

700.64, Tariff Schedules of the United States, with duty at the rate of 48 percent ad valorem.

This ruling is being issued under the provisions of Section 177.1(a)(1) of the Customs Regulations (19 CFR 177.1(a)(1)).

(C.S.D. 81-194)

Applicability of Coastwise Laws to Foreign-Built Vessels Used for Sailing Instruction and Leased to a Sailing Club in Exchange for Monthly Dues

Date: March 13, 1981
File: VES-3-19
VES-3-02
CO:R:CD:C
104935 PH

This ruling concerns the use of a foreign-built vessel to teach sailing techniques for a fee, or for lease to a sailing club the members of which would be entitled to use the vessel in exchange for monthly dues.

Issues: 1. Is the use of a vessel to teach sailing techniques for an hourly fee a use in the coastwise trade?

2. Is the charter of a vessel by its owner on a monthly or annual basis to a sailing club of which the owner would be a member a use in the coastwise trade if the members of the club pay monthly dues in exchange for use of the vessel?

Facts: The inquirer represents a German citizen who has applied for United States citizenship and who owns a German-built 47-foot, 19-ton oak vessel which he intends to use for pleasure sailing in the San Francisco area and for either of the following activities:

1. Sailing instruction, for which the persons instructed would be charged on an hourly basis; and/or

2. Charter to a sailing club which would have 5 to 15 members who would be entitled to use the vessel in exchange for monthly dues. The vessel would be leased to the club on a monthly or annual basis, and the owner would be a member of the club but would have no power or rights in excess of other club members.

Law and analysis: There is no prohibition against the use by a German citizen of a German-built vessel for pleasure purposes. However, it appears that the vessel owner is a United States resident, as he has applied for United States citizenship. Therefore, the vessel would have been dutiable at the time of its arrival in the United States under the provisions of item 696.05 or 696.10, Tariff Schedules of the United States, depending upon its value.

The vessel under consideration, as a foreign-built vessel, would be prohibited from engaging in the coastwise trade. Generally, the coastwise trade is defined as the transportation of passengers or merchandise between points embraced within the coastwise laws. For purposes of the application of the coastwise laws, the coastwise trade also includes the carriage of passengers entirely within territorial waters, even though the passengers disembark at their point of original embarkation and touch no other coastwise point, and the carriage of fishing parties for hire, even if the vessel proceeds beyond territorial waters and returns to the point of the passenger's original embarkation. A "passenger" within the meaning of the coastwise laws is defined as "any person carried on a vessel who is not connected with the operation of such vessel, her navigation, ownership, or business" (section 4.50(b), Customs Regulations).

Customs has ruled, however, that the use of a vessel in connection with a *bona fide* instructional course in sailing for which a fee is charged (not including a voyage which is principally a cruise in which the "students" are acquainted only incidentally with maritime matters) does not constitute coastwise trade. Accordingly, if the vessel owner's proposed sailing course meets the foregoing conditions, the transportation of students and incidental instructional materials between coastwise points or wholly within territorial waters in the course of their instruction would not be considered coastwise trade.

The vessel owner also proposes to form a sailing club to which he would charter the vessel on a monthly or annual basis. Members of the sailing club would be entitled to use the vessel in exchange for monthly dues. The vessel owner would be a member of the club but would have no power or rights in excess of other club members. In effect, then, the owner would be chartering the vessel to the club for the use of its members, one of whom would be the owner.

Customs consistently has ruled that a yacht chartered under a *bona fide* bareboat form of charter and used only for pleasure purposes is not considered to be used in the coastwise trade. However, a yacht chartered under a charter agreement other than a bareboat charter (e.g., a time or voyage charter) and used in United States waters is considered to be used in trade and, if foreign-built or otherwise not qualified for the coastwise trade, would be subject to penalties for being used in the coastwise trade.

In determining whether or not a charter agreement is a *bona fide* bareboat form of charter, we have stated, "[t]he crux of the matter is whether the complete management and control of the vessel have been wholly surrendered by the owner to the charterer so that for the period of the charter the charterer is in effect the owner." On this basis, Customs has ruled, for purposes of the coastwise trade laws, that a charter

agreement which permits the owner to act as master or as a member of the crew, or which permits the owner to accompany the vessel during the charter period, would not be considered a *bona fide* bareboat charter.

In this case, the vessel owner would be chartering the vessel to the sailing club whose members, which include the owner, would use the vessel in exchange for monthly dues. Because the owner of the vessel would be a member of the sailing club, we believe it would be inevitable that he would retain some authority over the vessel, whatever the terms of the agreement under which the vessel were chartered to the club, and the charter agreement would not be considered a *bona fide* bareboat charter. Accordingly, use of the vessel by club members in United States waters and/or between United States coastwise points would be prohibited as a use in the coastwise trade.

As the inquirer is informed in the letter transmitting this ruling, the uses to which the owner proposes to put the vessel may subject it to vessel documentation and safety requirements administered by the U.S. Coast Guard.

Holdings: 1. Use of a foreign-built vessel in connection with a *bona fide* instructional course in sailing does not, of itself, constitute coastwise trade.

2. Charter of a foreign-built vessel by the owner to a sailing club, the members of which may use the vessel in exchange for monthly dues, is not considered a *bona fide* bareboat form of charter, for purposes of the coastwise trade laws, if the vessel owner is a member of the club and, therefore, use of the vessel by club members in United States waters or between United States coastwise points would subject the vessel to appropriate penalties.

Effect on other rulings: None.

(C.S.D. 81-195)

Subject: Classification: Surf-Sailers Valued at Not Over $15,000 Which Are Not Used in Trade or Commerce Are Classifiable as Yachts or Pleasure Boats in Item 696.05, TSUS

File: March 16, 1981
Date: VES-12-02-CO:R:CD:C
104939 HS

To: Regional Commissioner of Customs, Chicago Illinois 60603.
From: Director, Carriers, Drawback and Bonds Division.
Subject: Protests/Applications for Further Review—Detroit Protests Nos. 3801-0-000154 and 3801-0-00187.

The issue in the subject Protests is whether "surf-sailers" valued at not over $15,000 should be classified as yachts or pleasure boats in item 696.05, Tariff Schedules of the United States (TSUS), or as sport equipment, not specially provided for, in item 735.20, TSUS.

A surf-sailer is a sailboat composed of rigging and hull. The rigging is of a conventional lateen style used on small craft. The hull is a fiberglass shell encasing a foam core. It is approximately 13 feet long, 27 inches wide and seven inches deep, has a flat bottom and is equipped with a centerboard and moveable skeg. It has no "cockpit" or depression in which to place one's feet while sailing. It has no rudder, *per se*, although tilting of the mast, adjustment of skeg size and position, and movement of body weight on the hull allow the surf-sailer to be steered quite readily under complete control across water.

Item 696.05, TSUS, provides the rate of duty for "yachts or pleasure boats, regardless of length or tonnage, whether motor, sail or steam propelled, owned by a resident of the United States or brought into the United States for sale or charter to a resident thereof, whether or not such yachts or boats are brought into the United States under their own power" valued not over $15,000 each.

For an article to be classified in item 696.05, TSUS, Customs must conclude that the article is a "vessel." A "vessel" is defined by 19 U.S.C. 1401(b) for purposes of the Tariff Schedules as including "every description of water craft or other contrivance used, or capable of being used, as a means of transportation in water".

In *Thayer* v. *United States* (T.D. 32252) (1912), the Court of Customs Appeals stated that a "temporary, fugitive, impractical, although possible use for transportation of articles or things of trifling weight in smooth waters only for short distances" would not be considered a sufficient use to entitle a craft to "vessel" status. Customs used *Thayer* as its rationale in Customs ruling 062052 (May 23, 1979), where it held that a "Windsurf", described as having the "appearance of a surfboard which is equipped with a sail" was classifiable in item 735.20, TSUS, as sport equipment rather than as a yacht or pleasure boat.

Since that decision, however, surf-sailers have developed beyond the stage of an article having the "appearance of a surfboard which is equipped with a sail" and which could only be used in smooth waters for short distances. Evidence has been supplied that one may travel as far as 550 miles on a surf-sailer and that surf-sailers may be used on oceans as well as on smooth waters.

Further, it appears that the surf-sailers are much more substantial in both size and inner filling than surfboards. A surf-sailer consists of more than a mere surfboard and sail. The surf-sailer is equipped with a skeg, which is a limited type of steering device. It also is equipped

with a rubber socket fitting at the base of its mast which allows looseness and flexibility so that strong winds will not bend and break the mast. While the surf-sailer does not have a rudder, it may be steered quite readily by the occupant's adjusting the angle of the mast and his or her weight on the hull.

Customs has held that craft similar to the surf-sailers are considered vessels. In T.D. 56080(65) (December 27, 1962), Customs ruled that watercraft made of molded fiberglass, approximately 15 feet in length and 2 feet 10 inches in width, weighing 95 pounds, designed to be propelled by paddles and used as sport pleasure craft, were vessels.

Ruling 057281 (October 25, 1978), held that motorized surfboards were classifiable in item 696.05, TSUS, as pleasure boats. The motorized surfboards were described in the ruling as being comprised of a streamlined hull, a 10 horsepower, two stroke engine, a shrouded propeller, a fuel tank with a reserve tank, and a large surfboard-like surface with two paddles alongside the board. The rider operated the motorized surfboard by means of a pistol-grip hand throttle attached to the craft by a straining rope and steered by shifting his weight on the board, as on a conventional surfobard. There seems to be little distinction, for tariff classification purpose, between the motorized surfboard and the surf-sailer aside from the former's motor capabilities.

Other craft, such as a self-propelled "Flippy" boat shaped like a marine animal and powered by a 3 horsepower internal combustion engine (Headquarters letter MS 431.51P of April 6, 1967), and the "Aquafon," a water cycle designed for use with an outboard motor or with pedals as the source of its propulsion (Headquarters letter MS 433.5P of May 6, 1969), also have been held by Customs to meet the requirements for classification as vessels.

United States v. *Seagull Marine* (C.A.D. 1251), decided July 31, 1980, holding that inflatable liferafts carried as equipment on a vessel are "articles of commerce" rather than "instrumentalities of commerce" and therefore are not vessels, is distinguishable. Because surf-sailers are not carried as equipment, as were the inflatable liferafts, that decision is not inconsistent with finding the surf-sailers to be vessels.

General Headnote 10(c), TSUS, provides "an imported article which is described in two or more provisions of the schedules is classifiable in the provision which most specifically describes it". While it is arguable that a surf-sailer could be classified as sport equipment under item 735.20, TSUS, that provision is a "not specially provided for" provision and does not describe surf-sailers as specifically as does item 696.05, TSUS.

Because the surf-sailers are not used in trade or commerce, but are used for pleasure purposes, are propelled by sail, and valued at

not over $15,000, we find, for the foregoing reasons, that they are properly classifiable in item 696.05, TSUS, and you are directed to allow the protests in full.

A copy of this decision should be attached to your Form 19 notices of action to be sent to the protestants.

The protest files are returned herewith.

(C.S.D. 81–196)

Vessels: Coastwise Trade Laws Involving the Use of a U.S.-Documented Foreign-Built Vessel in a Day Chartering Operation

Date: March 16, 1981
File: VES–4–03
VES–3–02
CO:R:CD:C
105008 PH

This ruling concerns the use of a foreign-built, United States-documented vessel in a day chartering operation.

Issue: Is the use of a foreign-built, United States-documented vessel in a day chartering operation in which the vessel departs from and returns to the same point each day and the owner acts as master of the vessel prohibited by the coastwise trade laws?

Facts: The inquirer proposes to purchase a foreign-built 41-foot sailboat. He proposes to use the vessel in a day chartering operation in which 6 or less passengers would be carried and he, the vessel owner, would act as master. The vessel would depart from and return to the same location each day.

Law and analysis: The vessel under consideration, as a foreign-built vessel, would be prohibited from engaging in the coastwise trade. Generally, the coastwise trade is defined as the transportation of passengers or merchandise between points embraced within the coastwise laws. For purposes of the application of the coastwise laws, the coastwise trade also includes the carriage of passengers entirely within territorial waters, even though the passengers disembark at their point of embarkation and the vessel touches no other coastwise point. Transportation of passengers from a point in the United States to the high seas and back to the point of embarkation is not considered coastwise trade. However, the carriage of fishing parties for hire, even if the vessel proceeds beyond territorial waters and returns to the point of the passenger's original embarkation, is considered coastwise trade.

Customs consistently has ruled that a yacht chartered under a *bona fide* bareboat form of charter and used only for pleasure purposes

is not considered to be used in the coastwise trade. However, a yacht chartered under a charter agreement other than a bareboat charter (e.g., a time or voyage charter) and used in United States waters is considered to be used in trade, and if foreign-built or otherwise not qualified for the coastwise trade, would be subject to penalties for being used in the coastwise trade.

In determining whether or not a charter agreement is a *bona fide* bareboat form of charter, we have stated, "[t]he crux of the matter is whether the complete management and control of the vessel have been wholly surrendered by the owner to the charterer so that for the period of the charter, the charterer is in effect the owner." On this basis, Customs has ruled, for purposes of the coastwise trade laws, that a charter agreement which permits the owner to act as master or as a member of the crew, or which permits the owner to accompany the vessel during the charter period, would not be considered a *bona fide* bareboat charter.

In the case under consideration, the owner of the vessel would be the master during the day charters. Accordingly, the vessel would be subject to penalties for violating the coastwise laws if used to transport passengers—

1. between points in the United States,
2. entirely within United States territorial waters, even if the vessel returned the passengers to the point of embarkation without touching at any other coastwise point, or
3. to engage in fishing, even if the vessel proceeded beyond territorial waters and returned to the point of embarkation.

However, the vessel would not be subject to penalties for violation of the coastwise laws if the passengers were transported from a point in the United States to the high seas and back to the point of embarkation and the passengers were not disembarked, even temporarily, at any other point in the United States.

As the inquirer is informed in the letter transmitting this ruling, the use to which the inquirer contemplates putting the vessel may subject it to vessel documentation and safety requirements administered by the U.S. Coast Guard.

Holdings: 1. The use of a foreign-built, United States-documented vessel in a day chartering operation with the vessel owner acting as master would be a violation of the coastwise trade laws, subjecting the vessel to appropriate penalties, if the passengers were transported—

a. between points in the United States,
b. entirely within United States territorial waters, even if the

352-988 O - 81 - 5

vessel returned the passengers to the point of embarkation without touching at any other coastwise point, or

c. to engage in fishing, even if the vessel proceeded beyond territorial waters and returned to the point of embarkation.

2. The use of a foreign-built, United States-documented vessel in a day chartering operation with the vessel owner acting as a master would not be a violation of the coastwise laws if the passengers were transported from a point in the United States to the high seas and back to the point of embarkation and the passengers were not disembarked, even temporarily, at any other point in the United States.

Effect on other rulings: None.

(C.S.D. 81-197)

Trademark Violation: Prohibited Importation Into the United States of Merchandise of Foreign Manufacture Bearing an American Trademark, 19 U.S.C. 1526

Date: March 17, 1981
File: TMK-3 CO:R:E:E
711711 SO

This ruling concerns the applicability of the prohibition set forth in section 526 of the Tariff Act of 1930, as amended (19 U.S.C. 1526), against the importation into the United States of merchandise of foreign manufacture bearing an American trademark.

Issue: Would the importation of pants bearing different color TABs of textile material, including orange TABs, in particular, sewn into the seam of the rear patch pocket, infringe the registered trademark, No. 577,490 for a small red marker TAB, commonly sewn into the left-hand vertical seam of the right rear patch pocket?

Facts: The attorney for Levi Strauss & Co. has stated that the United States Customs Service is not uniformly imposing restrictions against the importation of merchandise bearing pocket TABs said to infringe their registered trademark, No. 577,490, which has been recorded with Customs for import protection. Although not recorded with Customs, we note that Levi Strauss & Co. owns registered trademarks for white TABs, black TABs, and white TABs with LEVI'S on the left-hand vertical seam of the right rear patch pocket.

Customs officials in New York do not consider color to be a limiting characteristic of the mark and have imposed appropriate restrictions against the importation of garments bearing pocket TABs of many colors, while Customs officials in Los Angeles have not restricted the importation of garments bearing pocket TABs of even an orange color.

The attorney for Levi Strauss & Co. is seeking a ruling from the U.S. Customs Service that color is not a limitation of the trademark, and that protruding TABs from patch pockets which are of colors other than red should be considered an infringement of the trademark.

Law and analysis: The attorney has brought several significant decisions to our attention which have a bearing on the present ruling request. We note the decision of the Patent Office Trial and Appeal Board of April 16, 1970, which reversed the decision of the Examiner of Trademarks to refuse registration. Levi Strauss & Co. filed an application to register as a mark for garments, in particular trousers, "a small marker or TAB affixed to the exterior of the garment at the hip pocket." The record was persuasive that purchasers do recognize the applicant's TAB, notwithstanding differences in color, as indicating that the goods originated with the applicant, and the TAB may be registered as a trademark under section (f2) of the Act of 1946.

We also note that the decision of July 14, 1978, in the United States District Court for the Northern District of California in the case of *Levi Strauss & Co.* v. *Blue Bell, Inc.*, Civil Action No. C–70 930 WAI, which held that the sale, offering for sale, and advertising of pants bearing the pocket TAB trademark on the right rear patch pocket is an infringement of the plaintiff's pocket TAB trademark. The use of the TAB itself, in the location described above, constitutes the infringement, regardless of the color or the inscription which may be stitched thereon, including the trademark or trade name of a company other than Levi Strauss & Co. We recently learned that the Court of Appeals has affirmed the above referenced decision on all grounds. The Examiner of Trademarks has had the Levi Strauss & Co., application to register the TAB device as a trademark, regardless of color, under suspension pending resolution of the appeal. In view of the decision, it is not known whether the defendant will continue to oppose the registration.

Also noted is the Temporary Restraining Order issued by the U.S. District Court for the Northern District of California in the case of *Levi Strauss & Co.* v. *Schoenfeld Industries Inc.*, et al. Civil Action No. C78 1770 SC, restraining defendants from using the TAB on the patch pockets and simulated patch pockets of pants and shirts. The TABs which were before the Court were of various colors, including blue and blue with a red and white "union jack."

Holding: In view of the above, we are of the opinion that color is not a limitation of the trademark, and protruding TABs on patch pockets which are of colors other than red should be considered to be an infringement of the registered trademark of Levi Strauss & Co., No. 577,490, for a small red marker TAB. Copies of this ruling are

being distributed to all Customs officers, so that the Customs Service may provide uniform enforcement of the trademark restrictions applicable to the pocket TAB mark at all ports of entry.

(C.S.D. 81–198)

Copyright Infringement: Imported Stuffed Bears Held as Infringing on the Rights of the Copyright Owner

Date: March 17, 1981
File: CPR 3-CO:R:E:E
713585 SO

This ruling concerns whether or not a shipment of two types of stuffed bears is an infringing importation pursuant to section 602 of the Copyright Revision Act of 1976 (17 U.S.C. 602).

Issue: Would the importation from Korea of two types of stuffed bears infringe upon the rights of the copyright owner, Fun & Fancy Products, which had recorded their copyrights for soft sculptures known as "1050 Polar Bear, Sitting" VA 29–333 and "Polar Bear, Sitting" (Three sizes of bear) VA 29–335 with Customs for import protection.

Facts: The shipment referred to above arrived in Chicago, Illinois. The large bear arrived wearing red and white striped mittens of textile material attached together by a red cord and a red and white striped stocking cap of the same material as the mittens. The small bear is holding a small red velvet heart shaped cushion in its forepaws inscribed with the words [logo]. The Director, Classification and Value Division at Chicago is seeking a Headquarters opinion as to whether the two sample bears submitted for our consideration infringe the copyrights of Fun & Fancy Products referred to above.

Law and analysis: We compared the samples with large colored photographs of the copyright protected works. We are of the opinion that the imported works are strikingly similar to the protected works. Points of similarity are (1) the off-white plush material that is used to differentiate the ears and snouts of both the large and small bears and the hindpaws of the large bear, (2) the heavy brown thread that is used as the mouth of both bears and to separate the toes on the paws of the large bear and (3) the sitting position assumed by both bears.

Section 602(a) of the Copyright Law (17 U.S.C. 602(a)) provides, with certain specified exceptions not applicable in this case, that importation into the United States, without authority of the owner of

copyright under this title, of copies of a work that has been acquired outside the United States, is an infringement of the copyright. The Secretary of the Treasury is authorized to prescribed regulations for the enforcement of the provisions of this title prohibiting importation.

Section 603(c) of the Copyright Law (17 U.S.C. 603(c)) provides that, "Articles imported in violation of the importation prohibitions of this title are subject to seizure and forfeiture in the same manner as property imported in violation of the Customs revenue laws. Forfeited articles shall be destroyed as directed by the Secretary of the Treasury or the court, as the case may be; however, the articles may be returned to the country of export whenever it is shown to the satisfaction of the Secretary of the Treasury that the importer had no reasonable grounds for believing that his or her acts constituted a violation of law."

The test employed to determine if a design has been copied is whether an ordinary observer who is not attempting to discover disparities between two articles would be disposed to overlook them and regard their aesthetic appeal as the same. The substantial similarity test was developed in order to bar a potential infringer from producing a supposedly new and different work by employing the tactic of making deliberate, but trivial, variations of specific features of the copyright protected work.

Our comparison of the imported articles with the copyright protected works leaves no doubt that the imported articles are substantially similar to the copyright protected works. The addition of the mittens and hat to the large bear and the cushion to the small bear appears to us to constitute a deliberate attempt to make minor variations in the design while preserving a similar aesthetic appeal to the ordinary purchaser. Our general impression is that the works appear to be almost identical.

Holding: We are of the opinion that the imported stuffed bears would be prohibited entry into the United States as infringing on the rights of the copyright owner, Fun & Fancy Products. The merchandise is subject to seizure and forfeiture in accordance with 17 U.S.C. 603. In appropriate cases, the district director may grant relief from forfeiture upon consideration of a petition submitted pursuant to 19 CFR 133.51(a), under conditions specified by him (19 CFR 133.51(b)). However, in cases where the importer satisfies the district director that he had no reasonable grounds for believing that his acts constituted a violation of law, and exportation is suggested as an alternative disposition for the seized merchandise, exportation of the unlawfully imported articles would be limited by 17 U.S.C. 603(c) to returning the articles to the country of export.

(C.S.D. 81-199)

Entry: Whether the Date of Entry of a Shipment Is Considered To Be the Date Customs Releases the Shipment or the Date Customs Form 3461 Is Presented

Date: March 17, 1981
File: ENT-1-01:CO:R:E:E
715729 MC

This ruling concerns the correct time of entry of an importation.

Issue: Whether the correct date of entry of a shipment of yellow potato dextrine is December 19, 1979, (the date that the Customs officer examined and released the merchandise) or December 17, 1979, as subsequently requested by the importer.

Facts: A shipment of yellow potato dextrine arrived into U.S. Customs territory on December 16, 1979. The new expedited entry/entry summary procedure was followed. However, there was no notation on Entry Document Customs Form 3461 that the date of presentation was to be the date of entry.

On December 17, 1979, Customs Form 3461 was presented. The merchandise was released on December 19, 1979, as indicated by the written date and signature of the releasing officer. A letter appears in the files that the importer requested December 17, 1979, as the date of entry. However, notation was made by the Customs Import Specialist that the "request that entry date be established as 12/17/79, was not present with entry documentation presented to Customs on 12/17/79, but was submitted with entry 1/3/80."

The significance of the date is that "(e)ntries, or withdrawals from warehouse, for consumption made from December 19, 1979, through December 31, 1979, are subject to countervailing duties as set forth in T.D. 80-2." (Published in Federal Register 8/14/80. Volume 45, No. 159, page 54035). The instant shipment was determined to be entered on December 19, 1979, and therefore subject to countervailing duties. The importer's protest (No. 1601-0-000045) was denied and submitted to Headquarters for further review.

Law and analysis: Section 141.68 of the Customs Regulations provides that when entry documentation is filed without an entry summary, the "time of entry" is "(1) The time the appropriate Customs officer authorizes the release of the merchandise or any part of the merchandise covered by the entry documentation, or (2) The time the entry documentation is filed, if requested by the importer on the entry documentation at the time of filing, and the merchandise already has arrived within the port limits; or (3) The time the merchandise arrives within the port limits, if the entry

documentation is submitted before arrival, and if requested by the importer on the entry documentation at the time of submission."

In the instant case, the appropriate Customs officer authorized release of the merchandise on December 19, 1979, in conformity with 141.68(a)(1). The importer seeks to use the time that the entry documents were filed, as provided in 141.68(a)(2). However, as stated above, 141.68(a)(2) stipulates that the entry document filing date may be used "if requested by the importer on the entry document at the time of filing." According to the notation appearing in our records, the importer's request was not made at the time of filing, but rather over two weeks later. Consequently, countervailing duties were correctly assessed.

Holding: Unless the importer's request that entry document filing date be used as the entry date is made at the time of the filing, Section 141.68(a) mandates that when Customs authorizes the release of the merchandise shall be "the time of entry." Here, "time of entry" was December 19, 1979, and relief from the countervailing duties is denied.

(C.S.D. 81-200)

Entry: The Liquidation of Merchandise at a Dutiable Rate More Than 90 Days Prior to the Submission of GSP Form A

Date: March 17, 1981
File: ENT-1-03 CO:R:E:E
715770 MC

This ruling concerns protests and petitions for refund of duties collected upon a liquidation made more than 90 days prior to submission of a GSP Form A.

Issue: Whether relief under Section 520(c) of the Tariff Act should be granted where merchandise was liquidated at a dutiable rate more than 90 days prior to importer's submission of GSP Form A.

Facts: Entry No. 147118 was made for 3 cases of knives from Pakistan on June 14, 1978. The knives qualified for duty-free importation under the Generalized System of Preferences but the required GSP Form A was not available. A bond was posted for the production of the Form A and no duty was paid. The entry was initially liquidated free of duty due to error on June 23, 1978. In correcting this error, the Customs import specialist issued a Notice of Action on September 11, 1978, advising the importer that whereas no Form A was received, the entry would be dutiable. The entry was accordingly reliquidated as dutiable on September 21, 1978.

The importer alleges that he advised the import specialist on

October 5, 1978, of his efforts to obtain the Form A as soon as possible as shown by his telephone log. The District Director's office has no record of this alleged contact.

Duty was paid on November 21, 1978.

On August 1, 1979, Form A was submitted along with a letter requesting a refund of duties. A refund was requested by the importer's customhouse broker under Customs Regulations section 173.4 on November 29, 1979. The refund was denied on the grounds that the failure of the importer "to notify Customs of (his) intent to secure the necessary Form A within 90 days of the entry's reliquidation constituted a negligence that precluded reliquidation under 520(c) of the Tariff Act." The importer protested this decision on January 21, 1980.

Law and analysis: Section 10.171 through 10.178 of the Customs Regulations detail the procedure required in order to receive duty-free treatment for eligible articles imported directly from beneficiary developing countries under the Generalized System of Preferences. A "Certificate of Origin" (i.e. "Form A") must be submitted to substantiate the claim for duty-free treatment under the GSP.

Section 10.173(a)(3) provides the following:

> If the required (Form A) * * * is not produced at the time of entry, the entry shall be accepted, subject to compliance with (certain) requirements * * * only if the importer or consignee gives a bond * * *. Within 60 days after such entry, or such additional period as the district director may allow for good cause shown, the importer or consignee shall deliver to the district director the certificate of origin. If (it) is not delivered * * * within 60 days of the date of entry or such additional period as the district director, for good cause, may allow, the district director shall treat the entry as dutiable and may cancel the bond or * * * charge against the bond, as appropriate * * *.

In this case, the bond was posted and Customs mistakenly liquidated the entry free of duty on June 23, 1979. Whereas no Form A was present, the entry should not have been liquidated as free of duty. After giving due notice to the importer and well beyond the 60 day period following the entry, the entry was correctly reliquidated as dutiable on September 21, 1978. As section 10.173(a)(3) indicates, the 60 day period may only be extended for "good cause shown." Such burden rests on the importer. Nothing in the record indicates that this burden was met by the importer. In addition, the importer states that it was not until October 5, 1978, well beyond the 60 day period and after the reliquidation that any time extention may have been requested. Accordingly, reliquidation was not in error.

Section 520(c)(1) of the Tariff Act of 1930, as amended (19 U.S.C. 1520(c)(1)) states that Customs may reliquidate an entry to correct "a clerical error, mistake of fact, or other inadvertence not amounting

to an error in the construction of a law, adverse to the importer and manifest from the record or established by documentary evidence, in any entry, liquidation, or other Customs transaction, when the error, mistake, or inadvertence is brought to the attention of the appropriate Customs officer within one year after the date of liquidation or exaction."

It is our opinion that the reliquidation on September 21, 1978, was not an error, inadvertence or mistake of fact under section 520(c). Customs' action was intentional, deliberate and correct, based on the fact that no Form A had been submitted within 60 days after the entry nor within the 90 day protest period, following the liquidation. Section 10.112 of the Customs Regulations requires documents necessary to be filed in connection with a free entry, to be submitted before liquidation becomes final. A liquidation is considered to become final after 90 days. (See, e.g. section 173.2 of the Customs Regulations).

Holding: Entry No. 147118 was properly reliquidated at a dutiable rate as no Form A was present prior to, at the time of liquidation nor at any time within 90 days thereafter. Relief under section 520(c) was properly denied.

(C.S.D. 81-201)

Subject: Classification: Nonfunctional Stitching Applied to Textile Materials Constitutes Ornamentation Pursuant to General Headnote 3(b), Sch 3, TSUS

Date: March 20, 1981
File: CLA-2:CO:R:CV:G
066233 BB

DISTRICT DIRECTOR OF CUSTOMS,
Pembina, N. Dak.

DEAR SIR: This is in response to your memorandum of June 13, 1980, requesting clarification of Headquarters' position on whether nonfunctional stitching on nontextile inserts in otherwise textile garments, renders those garments ornamented for tariff purposes.

In Headquarters Ruling Letter (HRL) 019095 dated July 7, 1972, addressed to [Corporate name and address] we ruled that nonfunctional stitching on a strip of plastic coated material inserted into the sleeve of a cotton coat, constituted ornamentation for tariff purposes. This ruling states that, "regardless of the material from which the embroidered strip is made," the coat would be ornamented. This statement is not accurate and must be modified.

In HRL 044817 dated May 28, 1976, Headquarters ruled that nonfunctional stitching applied to a leather patch pocket on a pair of jeans did not render the jeans ornamented because Schedule 3, Headnote

352-988 O - 81 - 6

3(b), TSUS, requires that the types of ornamentation mentioned in Headnote 3(a), including nonfunctional stiching, must be done to a pre-existing *textile* fabric.

The clear language of Headnote 3(b) indicates that the embroidered plastic coated inserts in the jackets that were the subject of HRL 019095 only constituted ornamentation if the inserts were textile materials which under Schedule 3, Headnote 2(iv), includes coated or filled fabrics provided for in Part 4 of Schedule 3. Assuming the plastic inserts were of coated or filled fabrics, as defined in Schedule 3, Part 4, Subpart C, Headnote 2, they would render the jackets ornamented. If the inserts were of nontextile material they would not.

We are hereby modifying HRL 019095 to reflect this position and request that you furnish [Corporate name] with a copy of this decision

---

(C.S.D. 81-202)

Subject: Vessels: A Vessel Engaged in Research and Carrying No Merchandise and No Persons Except Crew and Scientific Personnel Would Not Violate 46 U.S.C. 289 or Any Coastwise Laws

Date: March 23, 1981
File: VES-0-02
VES-3-14-CO:R:CD:C
105035 JL

This ruling concerns the operation of a U.S.-registered foreign-built research vessel on the high seas and in U.S. territorial waters.

Issue: Will the operation of the American vessel as described herein violate 46 U.S.C. 289 or any other law or regulation administered by the Customs Service?

Facts: It is proposed to operate a foreign-built U.S.-registered vessel out of a U.S. port for the purpose of testing electronic equipment. While all voyages will originate and terminate in the same port, some will entail voyages to the high seas while others may be confined to U.S. territorial waters. The vessel is U.S.-registered with a restriction from engaging in coastwise trade and the American fisheries, and is documented for miscellaneous service as an oceanographic research vessel. It is stated that the only personnel carried aboard the vessel will be its crew and military and civilian personnel connected with the operation and testing of the electronic equipment installed thereon. Additionally, the vessel may engage in oceanographic research work such as seismic studies, marine biology, ocean pollution, and related physical sciences. The attorney for the operator of the vessel asks if the anticipated operation of the vessel will violate 46 U.S.C. 289.

Law and analysis: Title 46, United States Code, section 289, provides that no *foreign* vessel shall transport passengers between ports or places in the United States, either directly or by way of a foreign port, under a penalty of $200 for each passenger so transported and landed. As such, it has no application to a U.S.-registered, foreign-built vessel. However, title 46, United States Code, section 11, provides that a foreign-built vessel may not be documented to engage in the coastwise trade; and title 46, United States Code, section 883, provides that a foreign-built vessel may not transport merchandise between points embraced within the coastwise laws. The coastwise trade generally is defined as the transportation of passengers and/or merchandise between points in the United States, including points within territorial waters, either directly or by way of a foreign port or place.

Section 4.50(b), Customs Regulations, defines a "passenger" as any person carried on a vessel who is not connected with the operation of such vessel, her navigation, ownership or business.

The Customs Service has previously ruled that a vessel used solely in research is not considered to be employed in coastwise trade. Therefore, no violation of the coastwise laws would occur if the vessel carries no persons, other than its crewmembers and scientific personnel engaged in research, and no merchandise, other than the usual supplies and equipment necessary for the research.

Holding: No law or regulation administered by the Customs Service prohibits a foreign-built U.S.-registered vessel from engaging exclusively in testing electronic equipment and oceanographic research under the circumstances described, provided it carries no persons other than its crewmembers and personnel connected with the research and testing operations, and no merchandise, other than the usual supplies and equipment necessary for the testing and research activities.

(C.S.D. 81-203)

Drawback: This Ruling Establishes Parameters for Implementation of the New Same Condition Drawback Law

Date: March 26, 1981
File: DRA-1-CO:R:CD:D
212709 WR

Issues: 1. Whether a drawback claimant may use the Exporter's Summary Procedure for same condition drawback?

2. Is substitution permitted under the same condition drawback law?

3. Whether blanket identification on a lower-to-higher basis is permissible for same condition drawback?

4. Whether the accelerated payment program is applicable to same condition drawback?

5. Whether a drawback claimant must certify the lack of processing or, if processed, describe that processing of data in the claimant's records will show the same information and the claimant agrees to make those records available for audit.

Facts: No facts are presented.

Law and analysis: Public Law 96-609 (Dec. 28, 1980) amended section 1313 of the Tariff Act of 1930 by redesignating subsections (j) and (k) as subsections (k) and (l) and adding a new subsection (j). New subsection (j) (19 U.S.C. 1313(j)) establishes the right to drawback on imported merchandise that is not used in the United States and is exported or destroyed in the same condition as when imported.

The exporter's summary procedure established by section 22.7(d) of the Customs Regulations provides a means to reduce administrative costs. It can be used only with the permission of the Regional Commissioner who processes the drawback claims. Among the criteria which must be met before that permission is granted is a finding by that Regional Commissioner that the claimant's export volume is large enough to justify use of the procedure. Essentially, the procedure requires the claimant to submit with the drawback claim a chronological summary of the exports rather than the actual documentary evidence. However, the evidence which forms the basis for the summarization must be kept by the claimant and be available for examination by Customs. Further, the accuracy of the submitted summary must be secured by a bond which protects the Government from loss due to an incorrect summary. There is no legal impediment to use of the exporter's summary procedure for same condition drawback and the concerned Regional Commissioner may permit use of the procedure when justified.

The second issue is whether substitution will be permitted under same condition drawback. Section 1313(j) unlike section 1313(b) does not have a substitution provision and therefore substitution cannot be permitted for same condition drawback.

The next issue concerns the use of blanket identification of merchandise as provided under section 22.4(b) of the Customs Regulations. The Customs Service has applied the concept established in section 22.4(f) to articles other than those manufactured with imported or substituted merchandise. For example, that concept of identification from lower-to-higher lots was allowed for rejected merchandise under 19 U.S.C. 1313(c). There is no legal impediment to its application under 19 U.S.C. 1313(j).

The accelerated payment program established under section 22.20a of the Customs Regulations is limited to articles manufactured with the use of imported or substituted merchandise. The Customs Service has decided against expanding the accelerated payment program to other types of drawback as being unwarranted. No reason has been presented to change that position.

The final issue concerns the need for certification as to the lack or extent of processing done to imported merchandise for which there is a claim for drawback under 19 U.S.C. 1313(j). Because the accelerated payment program is not used with respect to same condition drawback, payment of those claims will not be made until the claim is liquidated. Under the stated facts, the claimant's records will show that either the merchandise was not subjected to any use other than the ones specifically excepted by 19 U.S.C. 1313(j) or the extent of that processing. Also, the claimant apparently has agreed in writing to keep its factory and records available for examination by Customs. On those facts, the legal requirements of the statute can be satisfied by use of the claimant's records.

Holdings: 1. The exporter's summary procedure can be used for same condition drawback if approved by the Regional Commissioner who receives the claims.

2. Substitution does not apply to same condition drawback.

3. There is no legal impediment to applying blanket identification (section 22.4(b) of the Customs Regulations) to 1313(j) drawback.

4. The accelerated payment program is not applicable to same condition drawback.

5. The Regional Commissioner who is responsible for processing drawback claims may approve use of a drawback claimant's records instead of the affidavit if the Regional Commissioner is satisfied that the records show the lack or extent of processing on the exported merchandise.

(C.S.D. 81-204)

Subject: Classification: An Insulated Boot Formed Through a Vulcanization Process and Not By Sewing and Stitching Is Classifiable Under Item 700.53, TSUS

Date: March 26, 1981
File: CLA-2-07:S:C:D:6:60-6-113 800222

In a letter dated February 2, 1981 you inquired as to the dutiable status of a vulcanized rubber, 100% waterproof, insulated boot, No. IWP-2028-12, manufactured in Korea.

The sample submitted is a calf-high, 8-eyelet, insulated rubber

boot commonly known in the trade as a Woodsman Boot or Pac. Although *non-functional* cotton stitching is discernible at the sole line, the footwear sample is formed through a vulcanization process and notby sewing and stitching. Additionally, the upper is of *molded construction* and is not formed by nonmolded vinyl or rubber parts.

Rubber/plastic footwear of this type is classifiable under the provision for other footwear designed to be worn over, or in lieu of, other footwear as a protection against water, oil, grease, or chemicals, or cold or inclement weather, all the foregoing having soles and uppers of which over 90 percent of the exterior surface area is rubber or plastics (except footwear with uppers of nonmolded construction formed by sewing the parts thereof together and having exposed on the outer surface a substantial portion of functional stitching) in item 700.53, Tariff Schedules of the United States, and dutiable at the rate of 37½ percent ad valorem.

This ruling is being issued under the provisions of Section 177.1(a)(1) of the Customs Regulations (19 CFR 177.1(a)(1)).

(C.S.D. 81-205)

Value: Entries of Industrial Sewing Machine Needles Appraised on the Basis of Foreign Value

Date: April 3, 1981
File: CLA-2 CO:R:CV:V
542193 MK

Re: Application for Further Review of Protest No. 1001-0-003091.

REGIONAL COMMISSIONER OF CUSTOMS,
New York City, N.Y.

DEAR SIR: This protest was filed against your decision in the liquidation of entries of industrial sewing machine needles. The merchandise was appraised on the basis of foreign value, section 402a(c), Tariff Act of 1930, as amended. The protestant contends that export value is the proper basis of appraisement, under the following facts.

[company name] is the sole manufacturer and exporter of industrial sewing machine needles which it sells in Belgium and for export to the United States. [co.] sells over 90% of these needles in Belgium directly to garmcnt manufacturers, who do not resell the needles. (co.) also sells small quantities to a few Belgian shops which repair and service textile machinery. These needles are not resold, but are consumed by the repair and service shops.

[co.] offers its needles for sale to the United States to all purchasers, and sells to several companies which resell the needles, principally to

garment manufacturers. All sales to the United States purchasers are made at the same price, with no restrictions on resale or use.

Foreign value, in pertinent part, is defined as "* * * the price at which such or similar merchandise is freely offered for sale for home consumption to all purchasers in the principal markets of the country from which exported, in the usual wholesale quantities and in the ordinary course of trade * * *"

The protestant contends that for merchandise to be freely offered for sale in the "usual wholesale quantities," the merchandise must be sold at wholesale. The absence of a wholesale level of trade precludes a determination under foreign value. He cites several court decisions in support of this contention. He also contends that prior to the 1956 amendments to the valuation law, sales to industrial users or consumers were not considered to be sales at wholesale, and he cites court cases which hold that "wholesale" contemplates only sales to purchasers for resale, and not sales to consumers or end users.

While the statute provides that foreign value shall be the freely offered price in the usual wholesale quantities, the issue of "usual wholesale quantities" exists only when the merchandise is sold or offered for sale at varying prices, depending upon the quantity purchased. There are many court decisions to this effect. For example, in *Plywood & Door Manufacturing Corporation* v. *United States*, R.D. 9111 (1958), the court first referred to the so-called "major portion of sales or offers for sale" rule used to determine usual wholesale quantities in *Brooks Paper Company* v. *United States*, C.A.D. 495 (1952) and then said:

> It will be observed that this is applicable where merchandise is freely offered for sale *at different prices for different wholesale quantities*, and the purpose of the rule is to enable the selection of *one* wholesale quantity as "the usual wholesale quantities," from which it follows that the price at which that particular wholesale quantity was freely offered for sale would be the price contemplated by the statute.

In *Jenkins Brothers* v. *United States*, T.D. 49093, 25 C.C.P.A. 90 (1937), the court said:

> Of course, where the price at which an article is sold does not vary according to quantities sold, no question of usual wholesale quantity can arise, and in such case a single article may sometimes be regarded as a usual wholesale quantity.

A similar opinion has been expressed in several other cases, for example, *Ramallah Trading Co.* v. *United States*, R.D. 7799 (1950), *Wm. A. Foster & Co., Inc.* v. *United States*, R.D. 7673 (1949), and *Luria Steel & Trading Corp.* v. *United States*, R.D. 9311 (1959).

In all the cases which the protestant cited in which the court was

attempting to determine usual wholesale quantities, sales were made to different levels of purchasers at different prices. For example, in *Montgomery Ward & Co.* v. *United States*, R.D. 7984 (1951), the merchandise, silver jewelry, was offered for sale to consumers at list prices and to dealers at a 25% discount from list prices. Likewise, in *United States* v. *Fisher Scientific Company* C.A.D. 513 (1952), there were two price categories for the merchandise, depending on the quantity purchased.

In the case before us, the manufacturer's price list for home consumption does not show that it sold at different prices according to the quantities sold or according to level of purchaser. Therefore, we conclude that no issue of "usual wholesale quantities" exists in this case.

The protestant cites several cases to support his contention that sales to industrial users or consumers cannot establish foreign value. We believe those cases are distinguishable from the instant case.

For example, in *Universal Carloading and Distributing Co.* v. *United States*, R.D. 4894 (1940), the record below showed that there was no foreign or export value. The court found that there was no foreign value because all sales were made at retail only, and such sales, under *Keve and Young* v. *United States* could not furnish a basis for the finding of foreign value. In the *Keve and Young* case, upon which this court relied, the merchandise was sold in Great Britain at list price directly to consumers, in single units. The merchandise was also sold at wholesale *and* in quantities of more than a single unit to dealers in Ireland and for export. The court found that a single unit was not *per se* a wholesale quantity and sales of a single unit to consumers in Great Britain were not wholesale transactions. Those facts are clearly distinguishable from the instant case.

In *Montgomery Ward & Co.* v. *United States*, *supra*, the quantity ordinarily sold at wholesale was 100–1,000 pieces, while the quantity ordinarily sold at retail was 1–4 pieces. In theory only, a dealer could purchase 1 piece, and a consumer could purchase 1,000 pieces, but in fact this did not happen. In this context the court held that Congress did not intend that the usual and ordinary retail prices should be used to establish the value of imported merchandise.

We believe the case of *Paramount Textile Machinery Co.* v. *United States*, A.R.D. 202 (1966), is relevant to the instant case. There, certain textile machinery was sold for home consumption only to manufacturers and not to dealers or jobbers. The court found that the sellers of such and similar machines freely sold them in the home market to all who were likely customers for such highly specialized machines, and that offers and sales only to manufacturers and dyers did not preclude a finding of foreign value. The issue of "usual whole-

sale quantities" was not specifically addressed, possibly because no quantity discount was involved, or possibly because, by implication, the "usual wholesale quantity" was one. The important fact is that the court found that sales made only to manufacturers, and not to dealers or jobbers, were held not to preclude a finding of foreign value.

In United States v. *Testing Machines, Inc.*, R.D. 5981 (1944), the merchandise was freely offered for sale in Canada, for home consumption, usually one at a time, to all purchasers. There was no quantity discount. Although sales were generally made to users in Canada, anyone could purchase at the same (users') price. The court did not analyze sales at the wholesale level, but simply found that, as the articles were freely sold in the usual wholesale quantities, foreign value was the proper basis of appraisement.

We believe this case and the *Paramount* case, *supra*, support the proposition that sales only to end users can establish foreign value. As the court said, in *Plywood and Door Manufacturers, supra:*

> Of course, it is well recognized that many consumer purchasers buy goods at wholesale or in wholesale quantities. This is particularly true in the case of purchasers, such as manufacturers, in the purchase of materials to use in producing other goods or articles* * * Consequently, the fact, standing alone, that a purchaser or class of purchasers is a consumer would not necessarily categorize the quantities in which he buys as retail quantities.

In *United States* v. *Richard & Co.*, T.D. 42216, 15 C.C.P.A. 143 (1927), the merchandise was sold at a discount only to wholesalers. The granting or refusal of the discount was irrespective of the quantity purchased. The C.C.P.A. reversed the Customs Court's finding that sales at the discounted price were the basis of foreign value, because these sales were a minor portion of the total sales, were not in the usual wholesale quantities, and were not freely offered, in the ordinary course of trade. In its opinion the court said:

> Section 402(b) does not provide that the wholesale price shall be the price *to wholesalers*, but the price in the usual *wholesale quantities*. The law is not concerned with the persons who buy, but the manner in which they buy.

That statement was quoted approvingly in *American Shipping Co.* v. *United States*, C.A.D. 198 (1942). There, X-Ray grids were sold singly, to dealers at one price and to consumers at a higher price than to dealers. The importer contended that sales to consumers were retail transactions, notwithstanding the fact that the sales were in the usual wholesale quantity and that Congress contemplated only wholesale transactions as entering into a foreign value determination. The importer also contended that the statutory foreign value phrases "all

352-988 O - 81 - 7

purchasers" and "in the ordinary course of trade" did not refer to users or to sales in single units at retail, and that Congress could only have had in mind the ordinary course of trade in wholesale quantities in wholesale transactions. In reply to these contentions, the court said:

> Appellant seeks to have us read into the provision language which it does not contain and language which would * * * be court legislation. The importer would have us interpret the paragraph as if it read: freely offered for sale to all purchasers * * * in the usual wholesale quantities to wholesalers who sell to retailers in the ordinary course of trade.
>
> If Congress had thought it was advisable to emphasize "wholesale quantities" and to provide that the sales which should be taken as a basis of the value for appraisement purposes should be only those in which wholesale quantities were sold for resale, it would have been an easy matter for it to have done what appellant seeks to have us do.
>
> In the instant case, the only freely offered prices to all purchasers, obviously, were the prices at which the merchandise was appraised. To read language into the provision in accordance with appellant's implied request is to read out of the same provision the phrase "freely offered for sale to all purchasers" which has been so strongly emphasized in the decisions of this court.

Finally, the protestant argues that because Congress amended the valuation law to include industrial users in the definition of "purchasers at wholesale," sales to industrial users under the "old law" (section 402a) were not considered to be wholesale sales, and therefore could not be used as a basis for valuation.

The 1956 amendment in question made a major change in the method for determining "usual wholesale quantities." Congress and Treasury officials who testified at various hearings held prior to enactment of the Customs Simplification Act of 1956, recognized that it was commercially unrealistic, and even "aberrational" to base "usual wholesale quantities" on the greatest number of sales. The law was therefore amended to base "usual wholesale quantities" on the price at which the greatest aggregate volume is sold.

However, even before 1956, the courts considered sales to industrial users as the basis of determining foreign value. In the *Testing Machines* case, *supra*, decided in 1944, sales generally made in single units to users established foreign value. In the *American Shipping* case, *supra*, decided in 1942, there were sales to dealers and to consumers, at different prices. The court categorically rejected the argument that sales to consumers could not be considered in determining foreign value. The *Paramount* case, *supra*, decided in 1966, accepted sales to users only as the basis for foreign value despite the 1956 amendment in question. Thus, there are grounds for contending, as we do, that the 1956 amendment simply codified existing practice.

Based upon the foregoing discussion, we conclude that the merchan-

dise in this case was properly appraised on the basis of foreign value. Under the circumstances, you are directed to deny the protest in full. Your file is returned herewith.

(C.S.D. 81-206)

Subject: Vessels: Converting a Vessel's Engine Cooling System From Salt Water to Fresh Water Does Not Constitute a Dutiable Repair Under 19 U.S.C. 1466

Date: April 9, 1981
File: VES-13-18
CO:R:CD:C
104937 JL

This ruling concerns the dutiability under the vessel repair statute of modifications to a vessel's engine cooling system.

Issue: Is the conversion of a vessel's engine cooling system from salt water to fresh water a dutiable repair under 19 U.S.C. 1466?

Facts: An American-flag vessel had modifications made to its cooling system piping in order to convert from a salt water to a fresh water system. The regional commissioner is of the opinion that the replacement of one system for another is a dutiable repair. The petitioner maintains that the installation of a new system which is a changeover from one type to another is a non-dutiable modification.

Law and analysis: The vessel repair statute, title 19, United States Code, section 1466 (19 U.S.C. 1466), provides for a 50 per centum ad valorem duty on the cost of foreign repairs to certain American-flag vessels.

In *E.E. Kelly & Co.* v. *United States*, CCPA (1929), T.D. 43322, a case in which the scope of the word "repair" as used in the vessel repair statute was at issue, it was held that the commercial meaning of a tariff term is presumed to be the same as its common meaning. In the absence of any evidence that a more restricted meaning was "uniform, definite and general", the Court held that the dictionary definition of "repair" supported a conclusion that maintenance painting was dutiable as repairs under the statute because it found that "maintenance" is used in the sense of keeping a thing in good condition by means of "repair".

The word "alter" is defined by Webster's Third New International Dictionary, 2nd ED. (1971):

> To cause to become different in some particular characteristic * * * without changing into something else. As measure, dimension, course, arrangement, or inclination.

The same source defines "modify" as follows:

> To change the form or properties of for a definite purpose,* * *

The court in *Kelly* adopted this Funk & Wagnalls New Standard Dictionary definition of "repair":

> The process of repairing; restoration after decy, waste, injury, or partial destruction; supply of loss; reparation; the *repair* of a building; often in the plural; as to make *repair* on a roof * * *

The invoice from the Canadian shipyard discloses that item 008, "piping modification in machinery spaces in way of salt to fresh water cooling conversion", involved primarily the integration of the existing fresh water systems of the vessel with the engine cooling pipeline by brazing, fitting, adding reducers, etc. The affidavit of the vessel manager states that these items constituted the last tasks necessary for the conversion, ones that could only have been accomplished on a dead ship, and that the system was otherwise operable and not in need of repair.

On the record, we are of the opinion that the work at issue in no way constitutes a dutiable repair under section 1466. It is, rather, an alteration to a system that is part of the vessel's hull and fittings.

This is not to say, however, that every alteration or modification effected upon a vessel will be non-dutiable. It may happen that a unit will fail and the restoration of that unit to its previous level of normal operation or condition will be effected by an alteration. In such a case, a "repair" within the contemplation of the statute may be held to have been accomplished.

Holding: The alteration or modification of the cooling system of a vessel in order to convert it from salt water to fresh water operation, when no restoration of the system to previous working condition from a state of decay, destruction, or injury is involved, in not dutiable as a "repair" under 19 U.S.C. 1466.

(C.S.D. 81-207)

Subject: No Basis in Law Supporting a Demand for Return of Drawback Legally Obtained if the Article on Which Drawback Was Paid Is Returned to the U.S. Under a TIB, Later Breached

Date: April 15, 1981
File: DRA-1-CO:R:CD:D B 212591

Issue: May Customs demand repayment of drawback legally obtained, if the article upon which drawback was paid is returned

to the United States, under a temporary importation bond, later breached?

Facts: An aircraft manufacturing corporation which failed to export an American-made aircraft containing foreign parts entered under temporary importation bond, paid $25,000 to cancel liquidated damages of $600,000. Upon breaching of the bond, an additional demand was made for $25,339 by the District Director, Los Angeles, the amount paid as accelerated drawback on the parts when they were incorporated into and exported on the aircraft in 1972. A broker for the aircraft corporation now asks that the sum paid to cancel the liquidated damages, $25,000, be refunded.

Law and analysis: It is evident from the multitude of parts incorporated into this particular aircraft (empennage, wing assembly, tail cone, etc.) in the United States, that when it left this country it was considered a product of the United States. Because it was exported with benefit of drawback, when it reentered for refurbishing, it would have been dutiable under item 804.10, TSUS, at not more than the drawback received upon exportation. To avoid paying this amount, $25,339, the aircraft was entered under a temporary importation bond. This bond evidently was in the amount of $600,000 equal to twice the duty on the aircraft. Actually, since duty on the aircraft would have been limited to the amount of drawback received, the bond should have been taken in twice that amount, and not twice the duty which would have been paid on the total value of the aircraft.

There is no provision in the law or regulations which requires that a consumption entry be made and duties paid on merchandise which was the subject of a breached temporary importation bond. The liability for breaching this bond is limited to liquidated damages. Indeed, the purpose of assessment of those damages is to insure that the revenue is made whole by collection of an amount double (or in some cases 110 per cent) the duties. The liquidated damages may be cancelled upon payment of a lesser sum through mitigation.

Drawback requires importation of merchandise, manufacture of that merchandise (and/or domestic merchandise of the same kind and quality), and exportation of the article manufactured or produced. If these requirements were met (as we assume they were) drawback was rightly paid. The subsequent return of the aircraft to the United States under a TIB bond and the breach of the bond has no bearing on drawback rightly paid. It does subject the company to liquidated damages and of course there is no basis for refunding the liquidated damages.

Holding: The $25,339 returned to our Los Angeles offices constituted an exaction erroneously collected and covered by 19 U.S.C. 1520(a)(2), and should be refunded pursuant to that section from funds authorized by 19 U.S.C. 1520(b). There is no basis in the law or regulations which supports a demand for return of drawback legally obtained if the article upon which the drawback was paid is returned to the United States under a temporary importation bond, later breached.

(C.S.D. 81-208)

Entry: The Validity of Liquidations of Entry Summaries Assigned Duplicate Entry Summary Numbers

Date: April 16, 1981
File: ENT-1-01 CO:R:E:E
714574 JV

Re: Request for Internal Advice Under Part 177.11, Customs Regulations, Concerning the Validity of Liquidations of Entry Summaries Assigned Duplicate Entry Summary Numbers.

Issue: Whether the bulletin notice posting of an entry summary that had been assigned a duplicate (incorrect) entry summary number results in the legal liquidation of a different summary that has been assigned the identical (correct) summary number.

Facts: On March 4, 1980, a customhouse broker filed entry summary No. 380326 for an importation of floor coverings imported from England. This summary shall be referred to as summary "A".

On March 13, 1980, the same broker filed another entry summary with the identical summary number (380326). This summary, however, covered an importation of footwear from Tawian. It is hereafter referred to as summary "B".

Apparently, shortly after the filing of both summaries, a Customs employee noticed that both summaries were assigned the identical number and notified the broker. The broker advised Customs that summary "A" should be numbered 383026 and summary "B" numbered 380326. However, through inadvertence, the offical summaries that were on file with Customs were not changed. Both summaries still were numbered 380326.

On April 4, 1980, summary "A", still erroneously numbered 380326, appeared on a bulletin notice that was posted in the Customs office. Because the broker had changed the summary numbers on his records, he assumed that summary "B" had liquidated and filed a protest

against this summary on June 17, 1980. Since the final computation of duties due on summary "B" had not yet been determined, his protest was denied as "prematurely filed" on June 25, 1980. The official summaries on file with Customs were changed at that time to reflect the correct summary number assignment.

The following questions have been raised in connection with the above mentioned summaries: (1) Did either summary legally liquidate on April 4, 1980? If so, which one A or B? (2) Was Customs legally correct in denying the protest against summary "B"? It is the opinion of the district director that the erroneous posting on the bulletin notice of April 4, 1980, resulted in neither of the summaries being liquidated. Since that date, summary "A", now correctly numbered 383026, was posted and liquidated "No Change" on September 19, 1980. Summary "B" which was protested on June 19, 1980, remains unliquidated.

Law and analysis: The information shown on the bulletin notice of liquidation is the entry number, importer of record, and date of entry. Because Customs was aware of the correct entry number for summary "A" prior to liquidation and took no action to correct it, the inadvertent liquidation of summary "A" under the wrong number on April 4, 1980, was invalid. To hold otherwise under the circumstances, would result in the importer being misled into believing that summary "B" rather than summary "A" had liquidated, thereby causing him to lose his right to protest by not taking action to timely file a protest on summary "A" after the liquidation of that summary under the incorrect entry number.

The inadvertent bulletin notice posting of summary "A" under the wrong entry number did not result in the legal liquidation of summary "B", since the final computation or ascertainment of duties due on that entry had not been accomplished. Liquidation is the final Customs action on an entry. A protest filed pursuant to section 514, Tariff Act of 1930, as amended, is an objection to Customs counting, weighing, appraising, and like actions associated with an importation. Where Customs has not completed all aspects of these actions liquidation cannot take place. Since summary "B" had not liquidated, Customs was correct in denying the protest as prematurely filed. Entry summary "B" should be renumbered, and the importer advised of the newly assigned number and his right to protest that entry after it is eventually liquidated. The new number should eliminate the confusion created by the duplication of the original number.

Holding: The original liquidation of summary "A" on April 4, 1980, was not valid because of the use of the wrong entry number, nor did it result in the liquidation of summary "B".

(C.S.D. 81-209)

Subject: Bonds: Obligors on a Foreign-Trade Zone Operator's Bond Are Not Liable Under the Bond for Accidental Loss of Merchandise Through Breakage, Evaporation, etc.

Date: May 12, 1981
File: CO:R:CD:D
212804 WGR

Issues: 1. Whether the obligors on a foreign-trade zone operator's bond are liable for any loss of duty and taxes if the operator or the operator's employee accidentally drops a case of liquor and breaks all of the bottles?

2. Whether the obligors on a foreign-trade zone operator's bond are liable for any loss of duty if stacked cartons containing bottles of perfume absorb moisture, weaken, and tumble to the ground, breaking the bottles of perfume?

3. Whether the term "missing" used in the foreign-trade zone operator's bond is synonymous with the terms "broken, damaged, destroyed, or evaporated"?

4. Whether the obligors on a foreign-trade zone operator's bond are liable under the bond if broken bottles of liquor or perfume are found in a zone and the contents apparently have evaporated?

Facts: No facts were presented.

Law and analysis: Under section 3 of the Foreign Trade Zones Act of 1934, as amended (19 U.S.C. 81c), foreign merchandise placed in a zone is not subject to the Customs laws until it is sent from that zone into the Customs territory of the United States. In the case of *Hawaiian Independent Refinery* v. *U.S.*, 460 F. Supp. 1249, C.D. 4777 (1978), the court interpreted that provision to mean that foreign crude oil which was brought into a zone and consumed in that zone was not subject to duty.

There are two stated purposes for the foreign-trade zone operator's bond. First, in exchange for removing Customs officers from the zone during non-working periods the obligors guarantee the payment of any duty and tax on any merchandise that is removed from the zone without Customs permission or is otherwise missing from the zone. Second, in exchange for the discontinuance of the posting of inventory ledgers by Customs personnel, the obligors agreed to be absolutely liable as an insurer for any loss or estimated loss of revenue on any merchandise shown to have been received in the zone by the records of the Customs Service or the operator and then found to be missing from the zone without Customs permission. The bond format was published as attachment b to Customs Service Circular

FOR–2–O:I:C dated September 3, 1976. Paragraph 3.b. of that Circular states that the bond obligates the principal to *cover the oss of revenue* due on merchandise found to be missing from the zone (emphasis supplied).

Duties and taxes become due only when foreign merchandise leaves a zone for entry into the Customs territory of the United States. That is the only situation in which revenue can be said to be due. There is no duty and tax due if merchandise is consumed in the zone under the holding of the *Hawaiian Independent Refinery* case, supra. There is no duty and tax due if the foreign merchandise is exported to a foreign country from the zone by virtue of 19 U.S.C. 81c.

Therefore the purpose of the bond is to recover any duty and tax that should have been paid if the circumstances show that the missing merchandise was removed from the zone without permission and brought into the Customs territory of the United States. The term "missing" is not to be construed to apply to every article that cannot be found. It does apply to an article that cannot be found where a Customs Officer has probable cause to believe that the missing article was unlawfully introduced into United States Customs territory.

Thus, where the evidence suggests that the merchandise was consumed in a zone through breakage, the bond provisions are not triggered. Under the hypothetical facts presented the presence of broken bottles or cases in the zone suggests that the merchandise which had been in the broken bottles or cases was consumed in the zone. Therefore, no duty and tax is due, and the bond provisions covering loss of revenue do not apply.

Holdings: 1. The loss of liquor through the accidental breakage of the bottles in a zone does not result in a loss of revenue and the bond does not apply.

2. The loss of perfume through evaporation following breakage of their bottles in a zone does not result in a loss of revenue and the bond does not apply.

3. The term "missing" as used in the foreign-trade zone operator's bond applies to situations where a Customs officer has probable cause to believe that the missing merchandise was unlawfully removed from the zone into the Customs territory thereby resulting in a loss of revenue.

4. Obligors on a foreign-trade zone operator's bond are not liable under the bond if broken bottles of liquor or perfume are found in a zone with the contents apparently evaporated unless the circumstances are such that the Customs officer has probable cause to believe that the merchandise did not evaporate, but was unlawfully brought into the Customs territory of the United States.

(C.S.D. 81-210)

Subject: A CF 7543 Contains Required Information To Complete a Drawback Claim and FIFO Accounting Method Is Acceptable for Identifying Same Condition Claims Under 19 U.S.C. 1313(j)

Date: May 13, 1981
File: DRA-1-09-CO:R:CD:D
212688 DB

Issue: May a certificate of delivery be filed in lieu of a consumption entry for purposes of making a same condition drawback entry?

For purposes of same condition drawback, 19 U.S.C. 1313(j), may a claimant designate lots of imported merchandise on a first-in-first-out (FIFO) accounting method for purposes of obtaining drawback under that law?

Facts: An importer of glassware plans to repack imported glassware with domestic tumblers of different sizes and shapes to form glassware sets which will be exported. Identification of the specific import entry would be lost at the point where the set was packaged for export. The importer's broker suggests that FIFO recordkeeping be maintained to identify entries for designation for same condition drawback.

Further, because many exporters/claimants under same condition drawback are not the importers of record, the former find it difficult to obtain consumption entries from the latter who wish to protect the confidentiality of price, volume, etc. The broker suggests that in lieu of a consumption entry a certificate of delivery be filed with the same condition entry.

Law and analysis: The filing of a consumption entry is not required for making a same condition drawback entry. To complete a drawback claim under regulations now being drafted for study, a copy of the import entry must be presented with the entry, if possible. If not, the claimant is to identify the import entry. If the exporter is not the importer, the CF 7543 would be the proper way to connect the merchandise with the consumption entry.

Repacking is specifically allowed as an "incidental operation" under the same condition drawback law, Public Law 96-609. The placement of glassware imported in bulk containers into boxes, cartons, etc. with domestic glasses to form a set would be considered repacking, a permitted operation under the law.

Insofar as FIFO is concerned, we have previously allowed this procedure for fungible merchandise under the direct identification drawback manufacturing law, 19 U.S.C. 1313(a) (See C.S.D.'s 79-27 of July 21, 1978 and 79-252 of December 5, 1978). This is allowed, however, only when merchandise is completely fungible and the rate and amount

of duty paid on all imported shipments remain constant. Should either factor differ from shipment to shipment, designation as set out in section 22.4(f), Customs Regulations, must be followed. This section provides in pertinent part:

> When identification is made against two or more lots of imported merchandise of different dutiable values or subject to different rates of duty, or against two or more lots of drawback products subject to different allowances of drawback, the drawback shall be based first upon the lot or lots of lowest dutiable value, rate of duty, or drawback allowance * * * from lower to higher until all the lots have been accounted for. * * *

Holdings: (1) The filing of a certificate of delivery for purposes of completing a same condition drawback entry by a claimant who is not the importer of record is the proper way to connect the merchandise to the consumption entry.

(2) The first-in-first-out accounting method may be used to designate merchandise for same condition drawback provided the rates of duty and amounts of duty paid on the merchandise remain constant over the entries to be designated.

U.S. Customs Service

Proposed Rulemaking

19 CFR Parts 24, 111, 141

Proposed Customs Regulations Amendments Relating To Discharge of an Importer's Liability for Duties

AGENCY: U.S. Customs Service, Department of the Treasury.

ACTION: Proposed rule.

SUMMARY: This document proposes to amend the Customs Regulations to establish an alternative procedure for an importer of record to pay duties on imported merchandise through a licensed customhouse broker. The purpose of the proposal is to aid importers of record in discharging their personal liability for the payment of duty. Presently, when an importer uses a broker and pays by check or draft, the importer often furnishes the broker one check or draft covering both duties and the broker's fees and charges. The broker then pays the duties to Customs on behalf of the importer. Under the alternative procedure, the importer may elect to sumit to the broker a separate check or draft for the duties, payable to the "U.S. Customs Service." The broker would then deliver the importer's check or draft to Customs.

This document also proposes to amend the Customs Regulations to require brokers to state on invoices or statements to clients that if the clients are importers of record, payment to the broker would not relieve the clients of liability for Customs charges in the event the charges are not paid by the broker. Clients also would be advised that if they elect to pay by check, they may pay Customs charges with a separate check payable to the "U.S. Customs Service."

DATE: September 3, 1981

ADDRESS: Written comments (preferably in triplicate) may be addressed to the Commissioner of Customs, Attention: Regulations Control Branch, U.S. Customs Service, 1301 Constitution Avenue NW., Room 2426, Washington, D.C. 20229.

FOR FURTHER INFORMATION CONTACT: Legal Aspects: Edward B. Gable, Jr., Office of Regulations and Rulings (202–566–5865). Operational Aspects: Herbert H. Geller, Duty Assessment Division (202–566–5307), U.S. Customs Service 1301 Constitution Avenue NW., Washington D.C. 20229.

SUPPLEMENTARY INFORMATION:

BACKGROUND

Section 141.1(b), Customs Regulations (19 CFR 141.1(b)), provides that duties on imported merchandise, both regular and additional, are a personal debt of the importer which may be discharged only by payment in full to Customs, unless relieved by law or regulation. The importer may pay Customs by any of the applicable means provided in section 24.1(a), Customs Regulations (19 CFR 24.1(a)). One commonly used method of payment is direct payment from the importer to Customs. However, many importers use licensed customhouse brokers to transact Customs business on their behalf. In such cases, when the importer elects to pay by check or draft, the importer often issues the broker one check or draft covering both broker's fees and charges, and duties. The broker then pays the duties to Customs on behalf of the importer.

To aid importers of record in discharging their personal liability for the payment of duties, by notice published in the Federal Register on July 2, 1979 (44 FR 38571), Customs proposed to amend section 141.1(b) to provide an alternative procedure by which importers, who use brokers and pay by check, may elect to submit to a broker a separate check for duties, payable to the "U.S. Customs Service." The broker would then deliver the importer's check to Customs. Although payment of duties by a separate check to the broker does not discharge the liability of the importer, this voluntary alternative procedure, which has been in effect in New York and several other Customs regions since February 1977, could help assure the importer that Customs receives the duty. Because this procedure is optional, an importer could continue to submit one check to the broker covering both the duties and the broker's fees and charges.

Interested parties were given until August 31, 1979, to submit comments on the proposed amendment. Based upon the comments received and its own review, Customs made several changes in the proposed rule.

However, Customs now believes it is necessary to amend Part 111, Customs Regulations (19 CFR Part 111), to make a related regulatory change. Accordingly, it is proposed to add a new paragraph to section 111.29, Customs Regulations (19 CFR 111.29), to require

brokers to state on their invoices or statements to clients that if the clients are importers of record, payment to the broker would not relieve the clients of liability for Customs charges in the event the charges are not paid by the broker. Clients also would be advised that if they elect to pay by check, they may pay Customs charges with a separate check payable to the "U.S. Customs Service."

By requiring brokers to so notify clients on invoices or statements, as well as Customs informing importers of their alternative methods of payment, we believe that importers will have more than adequate knowledge of the various methods available for paying Customs obligations.

As an alternative to requiring brokers to print the required information on the invoices or statements, Customs considered the possibility of permitting brokers to attach the information to the invoices or statements. However, Customs believes that the alternative is not satisfactory. It is possible that through error, the attachment may not be sent to the client, or the attachment, if sent, may become separated from the invoice or statement.

If these proposals are adopted, it is anticipated that there would be a 6-month delayed effective date of the final rule to provide brokers the time needed to use their existing stock of invoices and statements and to print new invoices and statements containing the new information.

Because adding a new paragraph to section 111.29, Customs Regulations, would impose a requirement on brokers, it is necessary to publish another notice of proposed rulemaking in the Federal Register incorporating the substance of the proposed rule published on July 2, 1979, and the new requirement relating to Part 111.

COMMENTS

Before adopting this proposal, consideration will be given to any written comments timely submitted to the Commissioner of Customs. Comments submitted will be available for public inspection in accordance with section 103.8(b), Customs Regulations (19 CFR 103.8(b)), during regular business days between the hours of 9:00 a.m. and 4:30 p.m. at the Regulations Control Branch, Room 2426, U.S. Customs Service Headquarters, 1301 Constitution Avenue NW., Washington D.C. 20229.

THE REGULATORY FLEXIBILITY ACT

Pursuant to the provisions of section 605(b) of the Regulatory Flexibility Act (Pub. L. 96–354, 5 U.S.C. 601, *et seq.*), the Secretary of

the Treasury has determined that the proposed regulations set forth in this document will not have a significant economic impact on a substantial number of small entities. Accordingly, these proposed amendments are not subject to the regulatory analysis or other requirements of 5 U.S.C. 603 and 604. The proposed amendments to 19 CFR 141 merely clarify the Customs Regulations and do not entail any real change in existing practice. The proposed amendment to 19 CFR 111.29 could entail some increased costs for brokers, but these costs are expected to be minimal.

EXECUTIVE ORDER 12291

This document does not meet the criteria for a "major rule" as specified in section 1(b) of E.O. 12291. Accordingly, no regulatory impact analysis has been prepared.

DRAFTING INFORMATION

The principal author of this document was Charles D. Ressin, Regulations Control Branch, Office of Regulations and Rulings, U.S. Customs Service. However, personnel from other Customs offices participated in its development.

AUTHORITY

This document is proposed under the authority of R.S. 251, as amended (19 U.S.C. 66), section 1, 19 Stat. 247 (19 U.S.C. 197), section 1, 36 Stat. 965, as amended (19 U.S.C. 198), section 505, 46 Stat. 732, as amended (19 U.S.C. 1505).

PROPOSED CUSTOMS REGULATIONS AMENDMENTS

It is proposed to amend Parts 24, 111, and 141, Customs Regulations (19 CFR Parts 24, 111, 141) as set forth below:

PART 24—CUSTOMS FINANCIAL AND ACCOUNTING PROCEDURE

It is proposed to revise the introductory paragraph of section 24.1(a), Customs Regulations (19 CFR 24.1(a)) to read as follows:

24.1 COLLECTION OF CUSTOMS DUTIES, TAXES, AND OTHER CHARGES.

(a) Except as provided in paragraph (b) of this section, the following procedure shall be observed in the collection of Customs duties, taxes, and other charges (see sections 111.29(b) and 141.1(b) of this chapter):

* * * * * * *

PART 111—CUSTOMHOUSE BROKERS

It is proposed to amend section 111.29, Customs Regulations (19 CFR 111.29), by adding a new heading to the present paragraph and designating that paragraph as paragraph (a), and by adding a new paragraph (b) to read as follows:

111.29 DILIGENCE IN CORRESPONDENCE AND PAYING MONEYS.

(a) *Due diligence by broker.* * * *

(b) *Notice to client of methods of payment.*

When a broker provides an invoice or statement to a client in connection with entries made by the broker, and the invoice or statement includes charges for duties, taxes, or other debts owed the U.S. Customs Service, the following information shall appear on that invoice or statement:

> If you are the importer of record, payment to the broker will not relieve you of liability for Customs charges in the event the charges are not paid by the broker. Therefore, if you pay by check, Customs charges may be paid with a separate check payable to the "U.S. Customs Service."

PART 141—ENTRY OF MERCHANDISE

It is proposed to revise section 141.1(b), Customs Regulations (19 CFR 141.1(b)), to read as follows:

141.1 LIABILITY OF IMPORTER FOR DUTIES.

* * * * * * *

(b) *Payment of Duties.*

(1) *Personal debt of importer.* The liability for duties, both regular and additional, attaching on importation, constitutes a personal debt due from the importer to the United States which can be discharged only by payment in full of all duties legally accruing, unless relieved by law or regulation. Payment to a broker covering duties does not relieve the importer of liability if the duties are not paid by the broker. The liability may be enforced notwithstanding the fact that an erroneous construction of law or regulation may have enabled the importer to pass his goods through the customhouse without payment. Delivery of a Customs bond with an entry is solely to protect the revenue of the United States and does not relieve the importer of liabilities incurred from the importation of merchandise into the United States.

(2) *Means of payment.* An importer or his agent may pay Customs by using any of the applicable means provided in section 24.1(a).

(3) *Methods of payment.* An importer may pay duties either—

(i) Directly to Customs whether or not a licensed customhouse broker is used; or

(ii) Through a licensed customhouse broker. When an importer uses a broker and elects to pay by check or draft, the importer may issue the broker either—

(A) One check or draft payable to the broker covering both duties and the broker's fees and charges, in which case the broker shall pay the duties to Customs on behalf of the importer, or

(B) Separate checks or drafts, one covering duties payable to the "U.S. Customs Service," for transmittal by the broker to Customs, and the other covering the broker's fees and charges. The importer's check or draft for duties shall be delivered to Customs by the broker.

WILLIAM T. ARCHEY,
Acting Commissioner of Customs.

Approved July 24, 1981.

JOHN P. SIMPSON,
Acting Assistant Secretary of the Treasury.

[Published in the Federal Register, September 3, 1981 (46 F.R. 44195)]

Recent Unpublished Customs Service Decisions

The following listing of recent administrative decisions issued by the Office of Regulations and Rulings, U.S. Customs Service, and not otherwise published, is published for the information of Customs officers and the importing community. Although the decisions are not of sufficient general interest to warrant publication as Treasury Decisions, the listing describes the issues involved and is intended to aid Customs officers and concerned members of the public in indentifying matters of interest which recently have been considered by the Office of Regulations and Rulings.

A copy of any decision included in this listing, indentified by its date and file number, may be obtained in a form appropriate for public distribution upon written request to the Office of Regulations and Rulings, Attention: Legal Retrieval and Dissemination Branch, Room 2404, U.S. Customs Service, 1301 Constitution Avenue NW., Washington, D.C. 20229. These copies will be made available at a cost to the requester of $0.10 per page. However, the Customs Service will waive this charge if the total number of pages copied is ten or less.

Decisions listed in earlier issues of the Customs Bulletin, through February 2, 1981, are available in microfiche format at a cost of $30.90 ($0.15 per sheet of fiche). It is anticipated that additions to the microfiche will be made quarterly and subscriptions are available. Requests for the microfiche now available and for subscriptions should be directed to the Legal Retrieval and Dissemination Branch. Subscribers will automatically receive updates as they are issued and will be billed accordingly.

Dated: August 26, 1981.

B. J. FRITZ,
Director,
Regulations Control and Disclosure Law Division.

Date of decision	File No.	Issue
7- 7-81	065362	Classification: PVC tape (774.55)
7-13-81	065417	Classification: vinyl pup tents and miniature binoculars (737.95)

Date of decision	File No.	Issue
5-27-81	065629	Classification: baler twine and "rotobaler twine" (774.55, 870.40)
5-27-81	065915	Classification: electromechanical cables (688.04)
7-10-81	065933	Classification: orthopedic arch supports (709.57)
7-10-81	065957	Classification: ladies' open toe casual shoe. ASP applicable.
6-18-81	065990	Classification: steam condenser units (660.15)
5-27-81	066509	Classification: silver bars (740.14)
6-19-81	066516	Classification: pin for a caster swivel (657.25)
5-27-81	066591	Classification: airport passenger transfer vehicle (692.04)
5-29-81	066605	Classification: bothway infrared communication systems (688.45)
6-29-81	066693	Classification: farm fencing (389.62)
6- 5-81	066841	Classification: toy "SA Race Car" (737.95)
6-10-81	067161	Classification: electronic fluorescent lamp ballast (688.45)
6- 2-81	068010	Classification: coated welding electrodes (632.84)
7-31-81	068023	Classification: wicker furniture (727.10)
7- 7-81	068072	Classification: compression ignition engines (660.42)
5-27-81	068076	Classification: ferro calcium silicon cored wire (657.25)
7- 1-81	068133	Classification: toy figures of extraterrestrial creatures (737.95)
6- 2-81	068149	Classification: spur sprocket for a chain saw (674.70)
7- 1-81	068184	Classification: bandages made of plastic with a non-medicated pad covered by a polyethlene net (389.62)
6-18-81	068329	Classification: toys for play in demolition derbies (737.95)
7- 7-81	068339	Classification: stainless steel wedge sections for screening machinery and ski edge material (609.75)
7-29-81	068382	Classification: leather gloves (735.05)
7- 7-81	068433	Classification: moldboard banks (666.00)
7-29-81	068452	Classification: toy book (737.52)
6-26-81	068499	Classification: seawater treatment plant (696.60)
7-30-81	068522	Classification: "petite" electronic cash register (737.95)
7-10-81	068601	Classification: textile pennant (355.25)
7-10-81	068691	Classification: toy plush bear (737.40)
7-31-81	068708	Classification: Chinese yo-yo (737.95)
7-28-81	068757	Classification: moon boots consisting of a shell and separable liners (700.60)
7-31-81	105150	Vessels: Whether U.S. carriers may be used to bring foreign blocks of processed fish into the U.S. from a foreign-flag processing vessel located on the high seas.
8- 3-81	105176	Vessels: Refund of assessed special tonnage tax and light money
7-24-81	105179	Vessels: whether a decree by the President of Mexico would be considered sufficient grounds to revoke the present exemption of vessels of Mexico from the payment of special tonnage tax and light money

Date of decision	File No.	Issue
7-20-81	105184	Vessels: Dutiability of the purchase of a made to order mattress for a vessel under 19 U.S.C. 1466
7-21-81	105186	Vessels: Designation of tug as special purpose vessel
7-23-81	105222	Instruments of International Traffic: Foreign containers entering United States as IIT may be used to transport domestic cargo between port of arrival and port where export cargo is to be loaded
7-29-81	105254	Vessels: Canadian fishing vessels may land their catches of albacore tuna in four U.S. ports on the West Coast pursuant to the U.S.-Canada Tuna Treaty (effective 7-29-81)
8- 7-81	105274	Vessels: Barges transported as cargo aboard foreign-flag barge did not proceed on foreign voyage and not used in violation of document
8-11-81	106275	Vessels: vice-president and operator of vessel aboard to observe operation of vessel during voyage is not a passenger, neither are members of his immediate family
7-14-81	542398	Classification: liquidation of imported automobile parts
7-23-81	542406	Classification: the applicability of transaction value to the sales of made-to-measure clothing between foreign manufacturers and foreign distributors
7-22-81	542424	Classification: automobiles sent abroad to have engines modified (806.20)
7-22-81	542437	Classification: Export value is reflected by an actual arm's length sale between unrelated parties
8- 6-81	542445	Classification: liquidation of component parts for concrete framework and shoring
6-25-81	800822	Classification: fresh, chilled alfalfa sprouts (137.95)
6-23-81	800824	Classification: cut flower preservative (790.55)
7- 1-81	800825	Classification: men's underwear (378.15)
6-19-81	800831	Classification: man's woven cotton jean (380.39)
6-23-81	800834	Classification: rough hardwood lumber dipped in used crankcase oil (202.42)
6-25-81	800837	Classification: nylon yarn (310.11)
7- 6-81	800839	Classification: slasher machine (674.42)
6-23-81	800842	Classification: double faced lambskins (124.80, 124.40)
7- 8-81	800843	Classification: spruce veneer panel (240.38)
6-23-81	800844	Classification: leather key case/coin purse combination (706.05)
6-23-81	800846	Classification: cream cheese (117.75, 117.88)
7- 8-81	900848	Classification: men's underwear (378.05)
6-25-81	800849	Classification: automobile lifting machine (664.10)
6-25-81	800852	Classification: plastic ultrasonic whistle (774.55)
7- 8-81	800856	Classification: self-standing swine tattooing machine (666.00)
6-25-81	800858	Classification: magnetic discs and book (724.40)

Date of decision	File No.	Issue
7- 8-81	800859	Classification: snuff bottles, ladies mesh brass bags, netsukes made from ivory (534.94, 706.45, 792.60)
7- 1-81	800865	Classification: thermochannels (661.68, 660.15, 660.10)
7- 6-81	800866	Classification: women's casual shoe (700.51, 700.52, 700.53, 700.57)
7-13-81	800868	Classification: adjustable pipe suspension system (657.80, 646.54, 923.51, 657.25, 646.74, 771.55, 774.25, 774.55)
6-25-81	800870	Classification: high energy drink (166.40)
7- 6-81	800871	Classification: low carbon steel wire in coils (609.41, 607.17)
6-25-81	800875	Classification: plastic plant watering device (772.15)
7- 6-81	800876	Classification: gold medallions, silver medallions (656.10, 656.15)
6-23-81	800877	Classification: cream cheese (117.75, 117.88)
7-16-81	800881	Classification: printers, jet and label (669.23, 676.30)
7-16-81	800883	Classification: castings of bench saw parts (674.51, 674.53)
7- 1-81	800887	Classification: two pane window encasing a louver (653.01, 544.61, 774.55)
7- 1-81	800888	Classification: laboratory sulfur trioxide generator (661.68)
7- 9-81	800898	Classification: nail hardener (461.40)
7- 6-81	800900	Classification: reversible garment (380.81)
7- 6-81	800902	Classification: seamless carbon steel drill pipe (610.49)
7- 6-81	800903	Classification: man's shirt (380.84)
7-16-81	800906	Classification: labels affixed to ladies' cotton woven jeans (382.00)
7- 6-81	800907	Classification: radio remote control 737.15, 685.60)
6-10-81	800708	Classification: needle-punched nonwoven fabric of man-made fibers (355.25)
7-17-81	800913	Classification: controllable steam jet recycling heater (661.65)
7- 8-81	800914	Classification: plastic halloween water globe (772.15)
7-16-81	800922	Classification: woven jacket (382.00, 380.00, 382.04)
7-13-81	800925	Classification: shopping bag dispenser (678.40)
7-16-81	800926	Classification: locking device, hubcap lock with tool (646.92, 774.55, 651.47)
7-13-81	800938	Classification: hydraulic jack parts (664.10, 652.88)
7-16-81	800953	Classification: man's shirt (380.84)
7-13-81	800959	Classification: sheepskin footwarmers (791.19)
7-17-81	800966	Classification: replica automobile bodies (692.22)
7-13-81	800967	Classification: barbecue gas igniters (688.45)
7-22-81	800978	Classification: novelty toy article (737.95)

Decisions of the United States Court of Customs and Patent Appeals

(C.A.D. 1269)

RANK PRECISION INDUSTRIES, INC. *v.* THE UNITED STATES, No. 80-39

1. CLASSIFICATION—TELEVISION CAMERA LENS SYSTEM

Appeal from the judgment of the United States Customs Court in *Rank Precision Industries, Inc.* v. *United States*, — Cust. Ct. —, C.D. 4866 (1980), dismissing appellant's protest without affirming the classification by the District Director of Customs of the involved merchandise under item 708.23 of the Tariff Schedules of the United States. Reversed.

2. FINDING OF ESTABLISHED AND UNIFORM PRACTICE SOLELY AN AGENCY DISCRETION

The decision of whether to make a finding of an established and uniform practice is a matter committed solely to agency discretion. The CCPA does not examine the reasons for, or the correctness of the decision in, making a finding, absent a clear abuse of discretion.

3. Id.—CHANGING ESTABLISHED AND UNIFORM PRACTICE

Section 315(d) specifies the procedure for changing an established and uniform practice that has been found to exist, and more than mere "withdrawal" by the agency is specified.

4. ID.—RELIANCE BY IMPORTER ON FINDING

Reliance by the importer on the "finding" is not necessary, and section 315(d) is not prospective in nature. If the opposite were true, the section would be rendered a nullity in the hands of a Secretary choosing to refrain from ever making a finding.

5. ID.—PUBLICATION OF FINDINGS NOT REQUIRED

Publication of the "finding" in the CUSTOMS BULLETIN was not necessary in this case because this action fell directly under 19 U.S.C.

1315(d) and was not governed by 19 CFR 177.10. There is no requirement in 19 U.S.C. 1315(d) regarding the form and manner in which the Secretary's finding of an established and uniform practice is to be made. The statutory requirement is only that such a finding be made.

6. ID.—ACKNOWLEDGEMENT OF ESTABLISHED AND UNIFORM PRACTICE

Agency letter, referring to "prior liquidations" and to previous classifications brought to agency's attention by letter from third person is acknowledgement that an established and uniform practice was in effect at the time of third person's letter.

7. ID.

Held: Since entries in question took place approximately three months after effective date of finding of established and uniform practice, they should have been liquidated under item 685.10, TSUS, in accordance with section 315(d), and liquidations under item 708.23, TSUS, were therefore, improper.

RANK PRECISION INDUSTRIES, INC., APPELLANT *v.* UNITED STATES, APPELLEE

No. 80-39

U.S. Court of Customs and Patent Appeals, August 27, 1981

Appeal from United States Court of International Trade, C.D. 4866

[Reversed]

Allan H. Kamnitz, Kenneth N. Wolf, attorneys for appellant.

Thomas S. Martin, Acting Assistant Attorney General, *David M. Cohen*, Director, *Joseph I. Liebman*, Attorney in charge, and *Sidney N. Weiss*, attorneys for appellee.

[Oral argument on May 6, 1981 by *Allan H. Kamnitz* for appellant and *Jerry P. Watkin* for appellee.]

Before MARKEY, *Chief Judge*, RICH, BALDWIN, MILLER, and NIES, *Associate Judges*.

MILLER, *Judge*.

[1] This is an appeal from the judgment of the United States Customs Court (now the United States Court of International Trade) in *Rank Precision Industries, Inc.* v. *United States*, — Cust. Ct. — , C.D. 4866 (1980), dismissing appellant's protests without affirming the classification by the District Director of Customs of

the involved merchandise under item 708.23 [1] of the Tariff Schedules of the United States ("TSUS"). The court held the merchandise properly classifiable under item 708.89 [2] as argued by appellee ("government") and denied classification under item 685.10 [3] as argued by appellant. We reverse.

BACKGROUND

The imported merchandise is a television camera lens system termed a "Varotal 30." Due to our disposition of this case under 19 U.S.C. 1315(d) ("section 315(d)"),[4] no further description of the goods is necessary.

The merchandise was entered at the port of Chicago, Illinois, on June 25, 1974, and was liquidated on July 19, 1974.The District Director of Customs classified the merchandise as a mounted lens under item 708.23, TSUS.

In response to a written request of March 26, 1974,[5] the Director, Classification and Value Division ("Director"), in a letter dated August 31, 1976, stated:

> DEAR MR. [deleted from exhibit]: Your letter of March 26, 1974, concerned the tariff classification of motorized television lenses for industrial television cameras produced in West Germany. Brochures were submitted for our examination.
>
> The merchandise in question is referred to as the [deleted from exhibit] and the [deleted from the exhibit]. These are motorized zoom television lenses for use in closed circuit vidicon television

---

[1] Schedule 7, Part 2 provides in pertinent part:

SUBPART A.—OPTICAL ELEMENTS, SPECTACLES, MICROSCOPES, AND TELESCOPES, OPTICAL GOODS NOT ELSEWHERE PROVIDED FOR

* * * * * * * *

Lenses, prisms, mirrors, and other optical elements, all of the foregoing whether mounted or not mounted:

* * * * * * * *

Mounted:

Lenses:

* * * * * * * *

708.23	Other	12.5% ad val.

[2] *See* note 1 *supra*; Schedule 7, Part 2, Subpart A further provides:

* * * * * * * *

Optical appliances and instruments not provided for elsewhere in part 2 of this schedule * * *

* * * * * * * *

708.89	Other appliances and instruments	22.5% ad val.

[3] Schedule 6, Part 5 provides in pertinent part:

Radiotelegraphic and radiotelephonic transmission and reception apparatus; radiobroadcasting and television transmission and reception apparatus, and television cameras * * * and parts thereof:

685.10	Television cameras, and parts thereof	6% ad val.

[4] In pertinent part, 19 U.S.C. 1315 provides:

Effective date of rates of duty

* * * * * * * *

Effective date of administrative rulings resulting in higher rates

(d) No administrative ruling resulting in the imposition of a higher rate of duty or charge than the Secretary of the Treasury shall find to have been applicable to imported merchandise under an established and uniform practice shall be effective with respect to articles entered for consumption or withdrawn from warehouse for consumption prior to the expiration of thirty days after the date of publication in the Federal Register of notice of such ruling * * *.

[5] Neither the request nor a copy thereof was in evidence before the Customs Court.

cameras. The television lenses are controlled by three motors, and power is transmitted to the lens elements and the iris by a system of cables which are attached to the television camera and the television lens.

You indicate that the subject merchandise can be used only with a television camera and that it was previously classifiable under the provision for parts of television cameras, in item 685.10, Tariff Schedules of the United States (TSUS), with duty at the rate of 6 percent ad valorem rather than under the provision for mounted lenses, in item 708.23, TSUS, with duty at the rate of 12½ percent ad valorem. You urge that the former classification be sustained.

Because of prior liquidations, it appears that a uniform and established practice exists of classifying the merchandise in question under the provision for parts of television cameras, in item 685.10, TSUS, with duty at the rate of 6 percent ad valorem. Accordingly, the subject merchandise will be so classified pending further study as to whether a change in this practice is warranted.

Sincerely yours,

R. X. ARNOLD
(For Salvatore E. Caramagne Director,
Classification and Value Division).

District Director, Chicago.
District Director, Los Angeles.
Area Director, New York Seaport.

In two other communications, the Director has taken a contrary position. In a letter to appellant dated February 15, 1973, the Director indicated that item 708.23, TSUS, applied to appellant's merchandise.[6] Also, in a letter of September 24, 1976, the "finding" in the above letter of August 31, 1976, was withdrawn by the Director, because, as suggested by both parties, the Director wished to refrain from commenting upon matters pending before the Customs Court.[7]

The Customs Court determined that, as of the liquidation date (July 19, 1974), there was no section 315(d) "finding." It said:

> Significantly, the official papers show that the entry in this case was made on June 25, 1974, and liquidated on July 19, 1974—

[6] The full text of the letter is as follows:
Mr. DOUG EDISON,
Rank Precision Industries, Inc., 411 East Jarvis Avenue,
Des Plaines, Ill.

DEAR MR. EDISON: Your letter of January 29, 1973, requested a reconsideration of the tariff statute of zoom lenses and rear units for television cameras, the subject of our letter of January 15, 1973, addressed to Mr. James A. Barnhart of Inglewood, California.

Although these lenses and rear units may be used as essential parts of the particular television cameras [*sic*], in question, they cannot be classified under the provision for parts of such cameras, as suggested. General Interpretive Note 10(ij) to the tariff schedules provides with respect to the classification of parts of an article that "a provision for 'parts' of an article covers a product solely or chiefly used as a part of such article, but does not prevail over a specific provision for such part." In view of the fact that item 708.23, Tariff Schedules of the United States, specifically provides for mounted lenses and other mounted optical elements, such as zoom lenses and rear units, the provision for parts of television cameras cannot apply in view of the expressed statutory provision.

Sincerely yours,

RUSSELL ARNOLD,
(For Director,
Classification and Value Division).

[7] The letter of September 24 does not appear in the certified record on appeal.

> *more than two years prior to the "finding" of an established and uniform practice*, as set forth in [the August 31, 1976, letter]. Consequently, it is obvious that at the time of importation in 1974 plaintiff could not have relied upon the section 315(d) "finding" made by Customs in 1976. Indeed, the statute is clear that the notice requirements for a change of practice is intended for the benefit of importers whose entries are made *after* a "finding" of an established and uniform practice. [Citation omitted.]

Before the Customs Court, appellant introduced evidence that, of 190 of their entries between 1970–72, 182 were liquidated under item 685.10, TSUS, and only 8 were liquidated as mounted lenses under item 708.23, TSUS. The government objected to this evidence on the ground that it was hearsay, because it was provided by a witness who had analyzed business records that were not in evidence; further, that it was not probative, because the entries covered four distinct classes of merchandise and there was no indication of how many entries consisted of merchandise like that involved in this case. The court said that the objection was well taken, but allowed the evidence to go in for "whatever weight it deserves." In its opinion, the court focused on the eight entries liquidated under 708.23, TSUS, and concluded that "rather than proving the existence of an established and uniform practice during 1970–72, [the witness's] testimony demonstrates that there was some ambivalence on the part of Customs respecting the appropriate classification for the merchandise." Accordingly, the Custom Court said that there was not "*in fact* an established and uniform practice during the years 1970–72 of classifying the merchandise as parts of television cameras under item 685.10, TSUS * * * * * " (Emphasis supplied.)

Appellant argues that the Director's August 31, 1976, letter constitutes a "finding"; that the Director found an established and uniform practice existed of classifying the imported merchandise under item 685.10, TSUS; that, by reference to a requesting letter of March 26, 1974, the Director acknowledged that the practice existed as of said date; and that, because the Director has not complied with the notice provisions of section 315(d) and because appellant's date of entry is after March 26, 1974, the Customs Service is required to liquidate the entries in question under item 685.10, TSUS, and the July 19, 1974, liquidation is invalid. Finally, appellant argues that the eight entries liquidated under 708.23, TSUS, are *de minimis* and insufficient to negate the existence of an actual practice.[5]

---

[5] Optical Imports, Inc., importer and sole distributor in the United States of a motorized television lens system manufactured by a French concern, has presented briefs as *amicus curiae* which contain arguments paralleling those of appellant.

The government argues that any "finding" in the August 31, 1976, letter should have no bearing on the outcome of this litigation, because: it was withdrawn by the Director, due to pending litigation in the Customs Court, by the Director's September 24, 1976 letter; it was based upon insufficient information and appellant's evidence of an *actual* established and uniform practice is not probative; the Director, in his February 15, 1973, letter, stated that item 708.23, TSUS, applied; and section 315(d) is "prospective in nature" and requires reliance by the importer on the "finding." Finally, the government argues that use of the phrase "it appears" before the statement that "a uniform and established practice exists," indicates that a "finding" of such a practice was not intended.

OPINION

As to whether the Secretary of the Treasury through his delegate, the Director,[9] made a finding that item 685.10, TSUS, has been applied in classifying the subject merchandise under "an established and uniform practice," we agree with appellant that there was such a finding. Although the August 31, 1976, letter was not directed to appellant, the government does not question that it clearly describes appellant's merchandise.[10] Contrary to the Customs Court's view that "[t]his letter, somewhat equivocally, states [such a practice exists]," we are persuaded that the Director made an affirmative and unequivocal finding of an established and uniform practice. With respect to the words, "it appears," these must be read in context. The letter's next sentence reads: "Accordingly, the subject merchandise will be [classified under item 685.10, TSUS,] pending further study as to whether a change in this practice is warranted." A statement made by this court in *Asiatic Petroleum Corp.* v. *United States*, 59 CCPA 20, 23, C.A.D. 1029, 449 F. 2d 1309, 1312 (1971) is particularly appropriate: "[I]f, as the [government] argues, the letter of [August 31] was not intended to be a 'finding' under section 315(d), then certainly the [Director] could have found a better way to express himself."

With respect to the government's argument that in the letter of February 15, 1973, the Director indicates that item 708.23 applies to appellant's merchandise, the answer is that the letter is not relevant; similarly, appellant's evidence of an *actual* established and uniform practice during the years 1970–72 is not relevant. The

[9] Customs Delegation Order No. 1 (Revision 1), T.D. 69-126, 3 Cust. Bull. (1969) 377-380, as amended by T.D. 72-42, 6 Cust. Bull. (1972) 60-61 and by T.D. 72-321, 6 Cust. Bull. (1.72) 667.

[10] This letter was obtained from the government by appellant during discovery.

reason is that the merchandise was not liquidated until July 19, 1974, and the Director was certainly aware of his own correspondence prior to his finding in his August 31, 1976, letter. [2] Further, the decision to make or not to make a finding of an established and uniform practice is a matter committed solely to agency discretion. It is not for this court to examine the Director's reasons for, or the correctness of his decision in, making a finding, absent a clear abuse of discretion. *See Asiatic Petroleum Corp.* v. *United States*, 59 CCPA at 23, 449 F. 2d at 1312; *Washington Handle Co.* v. *United States*, 34 CCPA 80, 86, C.A.D. 346 (1946).

[3] Regarding the contention that the finding was withdrawn by the Director in the letter of September 24, 1976, section 315(d) specifies the procedure for changing an established and uniform practice that has been found to exist, and more than mere "withdrawal" by the Director is specified.

[4] Finally, the government's argument that reliance by the importer on the "finding" is necessary and that section 315(d) is "prospective in nature" finds no support in section 315(d). Indeed, if such were the case, that section would be rendered "a nullity in the hands of a Secretary choosing to refrain from ever making a finding."[11] *Ditbro Pearl Co.* v. *United States*, 62 CCPA 95, 97, C.A.D. 1152, 515 F. 2d 1157, 1159 (1975) (Markey, C. J., concurring).

[6] Although the August 31, 1976, letter does not specify the time frame of the established and uniform practice that was found to exist, it refers to "prior liquidations" and to previous classifications brought to the Director's attention by a letter of March 26, 1974. We are satisfied that this is an acknowledgement that an established and uniform practice was in effect at the time of the March 26, 1974, letter. [7] Since the entries in question took place approximately three months after the March 26, 1974, letter, they should have been liquidated under item 685.10, TSUS, in accordance with section 315(d). The liquidations under item 708.23, TSUS, were, therefore, improper. *Asiatic Petroleum Corp.* v. *United States*, *supra*.

Accordingly, the judgment of the Customs Court is reversed, and appellant's protest is sustained.

---

[11] We note that [5] publication of the "finding" in the Customs Bulletin was not necessary in this case because this action falls directly under 19 USC 1315(d) and is not governed by 19 CFR 177.10. *See Martin Brokerage Co.* v. *United States*, 36 Cust. Ct. 35, C.D. 1750 (1956). There is "no requirement in section 1315(d) regarding the form and manner in which the Secretary's finding of 'an established and uniform practice' is to be made. The statutory requirement is only that such a finding be made * * *. There is nothing in section 1315(d) which requires the Secretary to make *his* finding public or even to publish *his* finding." *Asiatic Petroleum Corp.* v. *United States*, 64 Cust. Ct. 47, 59-60, C.D. 3958 (1970) (Richardson, Judge, dissenting). On appeal, the dissenting opinion was adopted by this court as its own. 59 CCPA 20, 23, C.A.D. 1029, 449 F. 2d 1309, 1312 (1971).

(Appeal No. 81–8)

SYNTEX AGRIBUSINESS, INC., PETITIONER *v.* UNITED STATES INTERNATIONAL TRADE COMMISSION; MITSUI AND COMPANY, AND ALPS PHARMACEUTICAL CO., LTD., RESPONDENTS

Appeal No. 81–8, Petition for Writ of Mandamus

TO WHOM IT MAY CONCERN:

The attorneys in the above case are:

For Petitioner: Matthew J. Travers, Jr., 1050 17th St. NW., Washington, D.C. 20036.

For ITC: Edward Lebow, 8th Street, Washington, D.C.

Before MARKEY, *Chief Judge*, RICH, BALDWIN, MILLER, and NIES, *Associate Judges*.

MILLER, *Judge*.

Syntex Agribusiness, Inc. ("Syntex") petitions for a writ of mandamus to compel the United States International Trade Commission ("ITC") to institute an investigation under section 337 of the Tariff Act of 1930, as amended (19 U.S.C. 1337). The petition is denied.

BACKGROUND

The article involved in this petition is calcium pantothenate ("cal pan"), the calcium salt of pantothenic acid, which is one of the essential B vitamins and is required in minute amounts in human and animal diet to maintain health and normal growth. Cal pan is a derivative of petroleum.

The optical isomers of cal-pan are capable of rotating a beam of polarized light either to the right, dextrorotatory or "d," or to the left, levorotatory or "l." Mixtures of equal parts of "d" and "l" forms are optically inactive and known as racemic or dl-cal pan. It is only the "d" form that has biological activity and is a source of the vitamin d-pantothenic acid.

Both d-cal pan and dl-cal pan are commercially available compounds resulting from the reaction of pantothenic acid and a suitable calcium compound as a source of calcium, with the manufacture of d-cal pan requiring extra processing compared to the manufacture of dl-cal pan. D-cal pan is commercially manufactured principally for use in human nutrition as an ingredient of multivitamin tablets. In animal nutrition, the product is sold principally in the racemic mixture wherein the biological activity is derived only from the d portion of the mixture.

There are two industries in the cal pan market. One is devoted to the manufacture of cal pan which meets the requirements of animal nutrition, *i.e.*, racemic or dl-cal pan.

The other is devoted to the manufacture of cal pan which meets the requirements for human nutrition, *i.e.*, d-cal pan.[1]

On October 20, 1972, Syntex's predecessor, Hoffman-Taff, Inc., filed a complaint with ITC, then the Tariff Commission, and an investigation (No. AA 1921–131) under section 160 of the Antidumping Act of 1921, as amended (19 U.S.C. 160), was conducted. In a release dated December 7, 1973, ITC notified the Secretary of the Treasury that a domestic industry was being injured by reason of imports from Japan of cal pan sold at less than fair value. As a result of the ITC's determination, cal pan from Japan sold at less than fair value became subject to special dumping duties.

Subsequent to the 1973 dumping decision, Syntex ceased manufacturing d-cal pan and allegedly sustained severe losses in the manufacture of dl-cal pan.

On June 1, 1979, Syntex filed a complaint with ITC alleging unfair practices in the import trade of cal pan from Japan in violation of section 337. Syntex also alleged that the Department of Treasury, U.S. Customs Service, failed to timely assess dumping duties, which failure aided and abetted the foreign producers or importers. In response, ITC took the position that the alleged acts and effects were solely within the purview of section 160 and voted, on June 27, 1979, to not institute a section 337 investigation. On July 30, 1979, ITC referred the complaint to the Treasury Department, which has responsibility for enforcing the Antidumping Act.

On October 24, 1979, Syntex filed a revised complaint with ITC. Therein, all references to the Department of Treasury, U.S. Customs Service, and failure to implement the Antidumping Act of 1921, as amended, are omitted. The revised complaint contains only allegations of Sherman Act monopolization and of a conspiracy between a Japanese manufacturer, Alps Pharmaceutical Co., Ltd., and an American importer, Mitsui and Company, to restrain trade.

---

[1] According to Syntex:

Domestic industry sources are in close agreement that the U.S. cal pan market is at a level of about 1,450 metric tons, d equivalent. Based on the Commission's [ITC's] measure of domestic sales in 1973 and 1974—1,217 and 1,219 metric tons, respectively—U.S. demand for cal pan has increased roughly by 230 metric tons or an average annual rate of 2.6 to 3.1 percent. The value of the U.S. market on the basis of current prices is estimated at $13 million.

Total U.S. imports of cal pan more than tripled during 1974–79, increasing from about 687,000 pounds in 1974 to 2.5 million pounds in 1979. Japan is the dominant source country, accounting for roughly ¾ to ⅘ of total imports in every year since 1975.

CAL PAN U.S. MARKET

[1,000 lb]

Year	Total	Imports		U.S. products
		Japan	Other	
1974	2,677	500	187	1,990
1979	3,190	1,900	600	690

On November 20, 1979, ITC voted to not institute a section 337[2] investigation. However, it recontacted the Treasury Department concerning enforcement of the 1977 ITC determination because there had been no reply to ITC's July 30, 1979, referral.

On December 27, 1979, the Treasury Department responded to ITC's July 30, 1979, referral, saying that: (a) Syntex's original complaint was within the purview of the antidumping act; (b) assessments were fairly current regarding cal pan exports of two Japanese companies, Alps Pharmaceutical and Nippon Roche; (c) there were insufficient records to determine dates of entry for 335 unliquidated entries; (d) additional information from Syntex was requested to determine the propriety of continuing to use home market sales as a basis for determining foreign market value since, in the case of below-cost sales, constructed value may be required; and (e) the Trade Agreements Act of 1979 requirements for annual review of antidumping findings and deposits of estimated duties should provide greater protection to U.S. industries.

On February 12, 1980, ITC voted to dismiss Syntex's revised complaint of October 24, 1979, in accordance with 19 CFR 210.12.[3] The decision was based on section 337(b)(3) which, according to ITC, gave it discretion to institute an investigation "when the Commission had reason to believe that the matter before it was based in part on alleged acts and effects which were within the purview of [the antidumping laws] and in part on alleged acts and effects which may, independently from or in conjunction with those within the purview of such section, establish a basis for relief under [section 337] * * *."

Also on February 12, 1980, ITC voted to institute a preliminary investigation under section 603 of the Trade Act of 1974 (19 USC 2482) of certain aspects of the cal pan market in the United States.

On January 21, 1980, Syntex had filed a petition in this court for a writ of mandamus to compel ITC to institute a section 337 investigation based on its revised October 24, 1979, complaint. On February 21, 1980, Syntex moved that the court stay its consideration of the mandamus petition until ITC completed the section 603 investigation. On March 20, 1980, Syntex appealed to this court from ITC's dismis-

---

[2] Syntex states that, in regard to the 1973 ITC dumping determination, it had "formed an opinion and belief that the Department of Treasury, U.S. Customs Service was not assessing dumping duties in accordance with the Antidumping Act of 1921, as amended"; also that it informed ITC on June 27, 1979 (the same day ITC voted to not institute a section 337 investigation) that "approximately 335 entries of cal pan some dating back to 1974 were unliquidated * * *."

[3] 19 CFR 210.12 provides:

Institution of investigation.

Within thirty (30) days after receipt of a complaint or, in exceptional circumstances, as soon after such period as possible, the Commission shall determine whether the complaint is properly filed and, if so, shall institute an investigation. The investigation shall be instituted by notice published in the Federal Register, which notice will define the scope of the investigation. If the Commission determines that a complaint is not properly filed, the complaint shall be dismissed and the Commission shall notify the complainant in writing of its action with the reasons therefor.

sal of its revised complaint of October 24, 1979, stating the same grounds as those in its mandamus petition. On April 1, 1980, this court denied Syntex's motion for stay and dismissed its petition for a writ of mandamus on the ground that, as a result of the ongoing section 603 investigation, ITC might institute a section 337 investigation, in which case Syntex's petition for writ of mandamus would be moot; or, if ITC decided to not institute a section 337 investigation, Syntex could then petition for mandamus. In denying Syntex's motion to stay, the court pointed out that Syntex did not assert a legal right to an immediate section 337 investigation and that it had acquiesced in the ITC's actions relating to the section 603 investigation. *Syntex Agribusiness, Inc.* v. *United States International Trade Commission*, 617 F. 2d 290 (CCPA 1980).

On July 31, 1980, this court dismissed Syntex's March 20, 1980, appeal on the ground that there had been no final determination by ITC, which is essential for jurisdiction of the court.

On September 19, 1980, ITC notified Syntex that, as a result of its section 603 investigation, it had been determined that there were no section 337 unfair methods of competition. ITC terminated its section 603 investigation and informed Syntex that it would not reconsider its determination.

On January 7, 1981, Syntex filed this petition for writ of mandamus to compel ITC to institute an investigation on the following grounds:

> (a) ITC erroneously dismissed Syntex's revised complaint of October 24, 1979, seeking a section 337 investigation;
>
> (b) ITC erroneously instituted a section 603 preliminary investigation; and
>
> (c) ITC's decision that there is no section 337 violation is arbitrary, capricious, and an unreasonable abuse of discretion or otherwise not in accordance with law.

OPINION

The issue is whether Syntex's revised complaint, filed October 24, 1979, was a "complaint" within the meaning of section 337 of the Tariff Act of 1930, as amended (19 U.S.C. 1337). This revised Complaint is identical to its earlier filed complaint, except that it omits all references to the antidumping act and contains only allegations of Sherman Act monopolization and conspiracy between the Japanese manufacturer and the American importer to restrain trade. Syntex's revised complaint states:

> * * * Respondent, and possibly others, beginning since December 1973 and up to and including the date of the filing of this complaint, have individually, in concert with each other and with

> others who may be identified by the Commission or who may subsequently become know to the Complainant, conspired, combined, confederated, and agreed with each other and with others who may be identified by the Commission or who may subsequently become known to the Complainant, intentionally and purposefully, attempted to and have: (a) destroyed efficiently and economically operated domestic industries in the United States, or monopolized trade and commerce in these foods in the United States, and (c) [*sic*(b)] substantially injured efficiently and economically operated domestic industries * * * by forcing the domestic producers of calcium pantothenate to bid and sell at a loss. The effects of these violations of the law are to and have discouraged domestic producers from manufacturing calcium pantothenate to the substantial injury of trade and commerce in the United States generally and specifically in the manufacture and sale of calcium pantothenate.

ITC, although acknowledging that Syntex's October 24, 1979, complaint contains allegations of conspiracy, states that the complaint "contained almost no factual support for such allegation" and that the complaint was not properly filed under 19 CFR 210.20(a) (2) and (3),[4] because "the Syntex complaint did not provide an adequate factual basis for its conspiracy and monopoly claims, and therefore was not properly filed within the meaning of the applicable rules." In the absence of definition of the term "complaint" in section 337 or elsewhere in the Tariff Act of 1930, as amended, and in light of the procedures for Investigations of Alleged Unfair Practices in Import Trade set forth in 19 CFR 210.1 et seq., as authorized by sections 333 and 335 of the Tariff Act of 1930 (19 U.S.C. 1333 and 1335), it is clear that Syntex's revised complaint must comply with 19 CFR 210.20, which sets forth the requirements for a section 337 complaint.[5] *See Sealed Air Corp.* v. *U.S. International Trade Commission*, — F. 2d —, —, 209 USPQ 469, 479 (CCPA 1981). Specifically, since Syntex alleges monopolization and conspiracy by Alps and Mitsui, its complaint must comply with 19 CFR 210.20(a)(2) by including a statement of the facts constituting the alleged acts of monopolization and conspiracy.

In sections 8–10 of its revised complaint, Syntex refers to some 23

---

[4] 19 CFR 210.20(a)(2) and (3) provide:
The complaint.
(a) *Contents of complaint.* In addition to conforming with the requirements of § 201.8 of this chapter and § 210.5(a), § 210.5(b), and § 210.5(c) of this part, the complaint shall—
* * * * * * *
(2) Include a statement of the facts constituting the alleged unfair methods of competition and unfair acts;
(3) Describe specific instances of alleged unlawful importations or sales;
* * * * * * *

[5] Syntex does not argue the validity of the quoted provisions of 19 CFR 210.20.

exhibits in support of the monopolization and conspiracy allegations.[6] Section 8 contains manufacturing, sales, and inventory information in the domestic cal pan industry and lists several exhibits. Syntex asserts that from the data in these exhibits, it is—

> abundantly clear that the U.S. industry is being eliminated and that the demands of the marketplace are being met essentially by imports from Japan.
>
> As heretofore noted, prior to the time when cal pan imports from Japan were being sold at less than fair value, there were five companies actively engaged in the manufacture of racemic or dl-cal pan and one of these, the Complainant's predecessor company, was also engaged in the manufacture of d-cal pan.
>
> Today the Complainant is the only current U.S. producer of racemic or dl-cal pan and there are no U.S. companies producing d-cal pan.

Included in section 8 are data showing Syntex's 'significant and continued losses during its Fiscal Years 1972-75," a period during which it "increased its average sales prices approximately 17.5% while concurrently the U.S. Wholesale Price Index increased approximately 50% * * * ."

Also included in section 8 are data comparing prices for Japanese cal pan, based on 1972 prices adjusted for increases in the Japanese Wholesale Price Index, to prices at which it believes Japanese cal pan was actually being sold. From these data Syntex concludes:

> * * * that d-cal pan has been sold at unreasonably low prices subsequent to the Tariff Commission decision of December 7, 1973. It is submitted that the allegations are corroborated by those filed Appraisement Reports required under Section 209 of the Trade Act.
>
> Unfortunately, it is obvious that the assessment of dumping duties has provided inadequate and, indeed, absolutely no relief because of the fact that the Complainant has been forced to terminate the manufacture of d-cal pan.
>
> It can be reasonably anticipated that, having eliminated the

[6] Syntex also cites, in its brief in support of its petition for a writ of mandamus, the results of a review of antidumping findings by the U.S. Department of Commerce, International Trade Administration, 45 Fed. Reg. 59933 (September 11, 1980), which show the following price margins (percentage of price reduction from the foreign market value) during particular periods for certain manufacturers and exports of Japanese cal pan to December 31, 1979:

	Period	Percent
Alps Pharmaceutical Co., Ltd	Apr. 1, 1978 to Mar. 31, 1979	14.42
	Apr. 1, 1979 to Dec. 31, 1979	0
Mitsui & Co./Alps	Apr. 1, 1978 to Mar. 31, 1979	24.54
	Apr. 1, 1979 to Dec. 31, 1979	18.87
Fallek Chemical/Alps	Apr. 1, 1978 to Mar. 31, 1979	
	Apr. 1, 1979 to Dec. 31, 1979	25.13

Syntex points out that from Apr. 1, 1979 through Dec. 31, 1979, a period spanning the filing date of its June 1 1979, complaint, Alps showed no price margin and argues that, along with price margins that reflect "well settled unfair trade practices," this "strongly suggests the appearance of market manipulation"; also that such evidence is sufficient support of its petition for ITC to institute a section 337 investigation. However, Syntex did not include this information in its revised complaint. Whether this information alone would be sufficient to constitute a monopolization or conspiracy claim is not an issue before us.

> U.S. competition, the import price of monopolized d-cal pan will be arbitrarily adjusted upwards in relation to the predatory pricing practices of the foreign manufacturers and importers. This anticipation is becoming a reality as noted in the import price for d-cal pan for the first month of 1979 as shown in Exhibit 13, to wit, $14.50 per kilo.

To summarize the various sales data, the revised complaint makes the following statement:

> The pattern of the sale prices of feed grade dl-cal pan shows the persistent importing and selling of cal pan at unreasonably low prices, e.g., (1) during Fiscal Year 1976 the sale price of imported feed grade dl-cal pan was below Complainant's manufacturing costs and (2) during Fiscal Year 1978 the sale price of imported feed grade dl-cal pan failed to reflect anticipated increases resulting from Japanese inflation and exchange rate advantage.

In discussing several exhibits relating to Japanese cal-pan, the revised complaint states:

> During Calendar Year 1978 there were actual sales of imported feed grade dl-cal pan at $3.85 and $3.90 per kilo. However, based upon prior sales of Japanese cal pan that are adjusted to reflect the changes in the Japanese Wholesale Price Index and the conversion rate changes of the yen in relation to the dollar, Japanese feed grade dl-cal pan should have sold in Calendar Year 1978 as follows:
>
> $9.43 per kilo based on 1973 sales
> $4.73 per kilo based on 1975 sales
> $5.97 per kilo based on 1977 sales
>
> It is submitted that the history of the sales of Japanese dl-cal pan shows an erratic pattern of pricing which is incomprehensible and unreasonable. Further, it is represented that there is reasonable grounds to believe or suspect that the aforesaid sales do not reflect the total costs for manufacturing cal pan.

In conclusion,[7] section 8 of the revised complaint "submits that there is reason to believe that the Respondents, and possibly others, have conspired to destroy the cal pan industry in the United States for purposes of enjoying the illegitimate gains of monopolization."

In sections 9 and 10 of its revised complaint, Syntex discusses several exhibits, including its annual report and data concerning its percent return on sales and the loss of market share by U.S. producers in the d-cal pan and dl-cal pan markets. In section 9, Syntex concludes that unreasonably low prices of Japanese cal pan are the direct cause of its losses and low profits. In section 10, Syntex states that "as a direct consequence of the importation and selling of cal pan at said

[7] Syntex also submitted data allegedly showing that, except for labor costs, the variable costs of producing cal pan in Japan would be approximately the same as in the U.S.; further, that Japanese cal pan sold for less than Syntex's variable costs.

unreasonably low prices, there are now no U.S. producers of d-cal pan and the only surviving producer of racemic dl-cal pan [Syntex] is struggling to attain sales which amount to approximately 30% of the U.S. market."

The above review of Syntex's revised complaint discloses no facts which show the alleged acts of either monopolization or conspiracy. Rather, Syntex has merely alleged that the cost of basic materials for making cal pan, as well as labor costs, must be approximately the same in the U.S. and Japan and that the methods of manufacturing must be the same, so that the lower prices must be predatory; further, that since the distributor in the United States of Japanese cal pan would maximize its profits by charging at the rate Syntex charged for competitive products, it must be presumed that the reason it did not do so was conspiratorial—to drive competition out of the market; that once this was accomplished, it can be presumed that the price for the Japanese cal pan would be increased. Syntex asserts that this anti-competitive activity has driven it from the d-cal pan market and substantially injured its position in the dl-cal pan market. However, Syntex's complaint is no more than a theory built on suppositions and assumes that Japanese companies could not be substantially more efficient than Syntex. Also there is no unremediable damage to Syntex from dismissal of its complaint since it can always file a new complaint.

Although we recognize that antitrust claims are difficult to substantiate and that the Congress enacted the Trade Act of 1974 with the objective of helping U.S. businesses compete in the world marketplace, we, nevertheless, must hold that ITC's dismissal of Syntex's October 24, 1979, complaint was correct. The allegations set forth in the revised complaint regarding less-than-fair-market-value pricing might support an antidumping claim, but no more. They clearly do not support a monopolization or conspiracy claim.

Because of our disposition of Syntex's petition for a writ of mandamus on the basis of failure to comply with 19 CFR 210.20(a)(2), it is unnecessary to consider the relationship between investigations conducted under section 603 and those under section 337. We note, however, that, although it is clear that section 603 investigations may be used for preliminary matters in conjunction with section 337 investigations, there appears to be no basis—statutory or otherwise—for substituting a section 603 investigation for a section 337 investigation.

ITC's section 603 investigation was conducted on its own initiative *following dismissal* of Syntex's complaint. The report of the investigation shows that outdated technology and problems with government regulations were the major contributing factors that caused Syntex to cease production of d-cal pan; that, although one

Japanese company, Daiichi (not named in Syntex's complaint), had acquired for a time what could be considered a monopoly share of the d-cal pan market, there were new producers who could be expected to erode Daiichi's market share; also that Daiichi's prices did not immediately lower upon entry of competitors into the d-cal pan market, a finding consistent with absence of, rather than presence of, anticompetitive behavior. With respect to the dl-cal pan market, the investigation report discloses numerous producing competitors, with Alps at no time holding a monopoly share of the market.

Finally, the report shows that better technology was to be found in Japan; that competition was increasing from new entrants into the market in the United States and abroad; and that deficiencies existed in Syntex's cost analysis. Although not required by statute to do so in light of Syntex's defective complaint, ITC made a substantial and conscientious effort to determine whether there was a reasonable basis to go forward with a section 337 investigation on its own initiative, as provided by section 337(b)(1).

The petition for writ of mandamus is denied.

Before MARKEY, *Chief Judge*, RICH, BALDWIN, MILLER, and NIES, *Associate Judges*.

NIES, *Judge*, concurring, with whom BALDWIN, *Judge*, joins.

The majority opinion focuses on the question whether a complaint filed October 24, 1979, by Syntex for the purpose of a § 337 investigation (19 U.S.C. 1337) was deficient under the statute and the ITC rules. I agree that the complaint was properly dismissed, but for reasons which are stated herein.[1]

In addition, petitioner also asserted as grounds for mandamus that the ITC had no authority to conduct a preliminary investigation under § 603 (19 U.S.C. 2482) in connection with a § 337 investigation, and that, in any event, the ITC's conclusion (which resulted from the § 603 investigation) that there was no basis for a § 337 investigation is arbitrary capricious and an abuse of discretion. In my view these issues must also be addressed inasmuch as they provide separate grounds for the mandamus petition.

BACKGROUND

The following chronology of events is shown by the record:

6/ 1/79 Syntex filed first § 337 complaint.

6/27/79 ITC voted not to institute requested investigation and

[1] I further believe it would be grossly unfair to preclude review of the propriety of its complaint at this time. As indicated in the majority opinion, Syntex has attempted to obtain review by a previous petition for a writ of mandamus and by an abortive appeal.

dismissed complaint on grounds only antidumping matters were pleaded, (i.e., failure by Treasury to enforce antidumping order against Japanese imports).

7/30/79 Syntex complaint sent to Treasury with request for status report on enforcement and plans for addressing matters in Syntex complaint.

10/24/79 Syntex filed second § 337 complaint deleting reference to Treasury and substituting conspiracy between Japanese producer (Alps Pharmaceutical Co. Ltd.) and U.S. importer (Mitsui & Co.) in predatorily pricing subject imports.

11/20/79 ITC voted not to institute §337 investigation at that time and to contact Secretary of Treasury again requesting status report on enforcement of antidumping order.

12/27/79 Status report from Treasury indicates enforcement being effected.

2/12/80 ITC voted to dismiss Syntex complaint of 10/24/79.

2/12/80 ITC voted to institute a preliminary investigation under § 603 into alleged anticompetitive practices asserted by Syntex.

2/20/80 Notice to public of § 603 preliminary investigation re same. (45 FR 12,931 (2/27/80).)

9/19/80 Section 603 investigation terminated without instituting § 337 investigation.

1/ 7/81 Petition for Mandamus filed.

THE GROUNDS FOR DISMISSAL OF THE SECOND COMPLAINT

The complaint filed by Syntex on October 24, 1979 (second complaint), was dismissed by the Commission on February 12, 1980, on the grounds that the complaint was not properly filed under ITC rule 210.12, stating further that the decision was based on § 337(b)(3) which gives the Commission discretion regarding whether to institute an investigation based on a complaint where the alleged unfair acts are in part within the purview of the antidumping laws.

In this proceeding, the parties have treated the dismissal as resting on two separate grounds. First, the parties raise a question of interpretation of the statute. Does the ITC have any *discretion* whether or not to institute a § 337 investigation where the alleged unfair acts are in part within the purview of the antidumping laws? The second addresses the issue whether the complaint is inherently deficient, that is, whether it fails to satisfy the minimum pleading requirements of ITC rule 210.20.[2]

[2] Under 19 U.S.C. 1335 the Commission is authorized to adopt such reasonable procedures and rules and regulations as it deems necessary to carry out its functions and duties Syntex does not question the reasonableness of the pleading requirements but disagrees with the determination that its complaint did not satisfy the rules.

DISCRETIONARY AUTHORITY UNDER § 337

Section 337(a) of the Tariff Act of 1930, as amended, (19 U.S.C. 1337(a)), prohibits unfair methods of competition and unfair acts in the importation of articles into the United States. Appellant asserts that the ITC must institute an investigation upon its complaint because of the mandatory language of § 337(b)(1) which provides:

> The Commission *shall* investigate any alleged violation of this section on complaint under oath or upon its own initiative. [Emphasis added.]

Conversely, the Government argues that § 337(b)(1) is tempered by § 337(b)(3).

The statutory language of § 337(b)(3) is prolix but unambiguous.[3] The Commission is required to terminate or not institute an investigation under § 337 where the acts complained of are solely within the purview of 19 U.S.C. 1673 (antidumping provisions). The first Syntex complaint based on injury by reason of less than fair value (LTFV) sales prices and failure of Treasury to collect dumping duties, was dismissed for this reason.

The Commission *may* institute an investigation when the alleged acts are in part within the purview of § 1673, but, in addition, other acts are alleged which independently or conjointly provide a basis for relief under § 337. The second complaint by Syntex was identical to the first complaint in its allegations except for the substitution of allegations of conspiracy and attempted monopoly by a Japanese manufacturer and its U.S. distributor by means of excessively low prices in place of the previous allegations of dereliction on the part of the Secretary of Treasury. While Syntex does not dispute that its second complaint is based in part on acts within the purview of § 1673, it argues that the proper course of action is not dismissal, but merely suspension, pending review by the administering authority to which a matter is referred. In view of the statutory language "may institute," I cannot agree.

The dismissal followed receipt of the 12/27/79 status report from Treasury advising that relief was being given against the damaging imports. An agency must, as the Government asserts, be given some latitude in expending its resources with respect to discretionary

---

[3] " * * * If the Commission has reason to believe the matter before it is based solely on alleged acts and effects which are within the purview of section 1303, 1671, or 1673 of this title, it shall terminate, or not institute any investigation into the matter. If the Commission has reason to believe the matter before it is based in part on alleged acts and effects which are within the purview of section 1303, 1671, or 1673 of this title, and in part on alleged acts and effects which may, independently from or in conjunction with those within the purview of this section, establish a basic relief under this section, then it may institute or continue an investigation into the matter * * *."

matters. The action of ITC, in my view, demonstrates no abuse of discretion even if the complaint were not deficient.

THE SUFFICIENCY OF THE SECOND COMPLAINT

The mandatory contents of a § 337 complaint are set forth in 19 CFR 210.20 which provides for substantial detail. The complaint, inter alia, must:

> be under oath;
>
> include a statement of facts constituting the alleged unfair methods of competition and unfair acts;
>
> describe specific incidents of alleged importations and sales; include a description of the trade or commerce affected when the element of a complaint has the effect to restrain or monopolize such trade and commerce;
>
> include a description of the complainant's business and his interest in the trade and commerce or domestic industry affected; and
>
> include data concerning the volume of sales, etc., and other data pertinent to the allegation that the effect or tendency of the importations or sales in question is to restrain or monopolize trade and commerce in the United States.

The Government argues that notice pleadings, of the type which are sufficient under Rule 8(a) of the Federal Rules of Civil Procedure (FRCP), are inadequate for ITC purposes; and ITC rule 210.20 reasonably requires much more. In view of the stringent time restrictions placed on the ITC,[4] this argument is persuasive. In any event, a review of the pleadings here shows that the complaint is insufficient even under the liberal standards of Rule 8(a), FRCP, which requires no more than a short and plain statement of the claim, showing that the pleader is entitled to relief.

Abundant authority can be found for dismissing a complaint which is no more than a general allegation of unlawful combination and conspiracy under the federal antitrust laws. See, e.g., *California Dump Truck Owners Ass'n, Inc,* v. *Associate General Contractors, Inc.*, 562 F. 2d 607 (CA 9 1977) in which the complaint was found overly broad and vague where plaintiffs averred generally unlawful combination and conspiracy; *Westinghouse Electric Corp.* v. *CX Processing Laboratories, Inc.*, 523 F. 2d 668 (CA 9 1975), in which a counterclaim for antitrust conspiracy by plaintiff and other manufacturers did not satisfy Rule 8(a)(2) where it provided a general historical description of the manufacturers and the charging portion of the counterclaim referred only to plaintiff and its distributors; *Augspurger* v. *Brother-*

[4] Under § 337(b) ITC is required to complete a § 337 investigation within one year. Eighteen months is allowed only in cases specifically declared to be more complicated.

hood of Locomotive Engineers, 510 F. 2d 853 (CA 8 1975), allegations that the defendant union acted in an unfair, invidious, unequal, and arbitrary manner toward the plaintiffs were held mere conclusion of law and insufficient under Rule 8(a); *Louisiana Farmers' Protective Union, Inc.* v. *Great Atlantic & Pacific Tea Co. of America*, 131 F. 2d 419 (CA 8 1942), in which the court stated that a plaintiff in an antitrust suit need not set out in detail the acts complained of, although he must do more than plead conclusions in the words of the statute.

As detailed in the majority opinion, petitioner's allegations are no more than conclusory.

AUTHORITY UNDER § 603

After the complaint of October 24, 1979, was dismissed, the Commission on its own went forward with an inquiry under § 603 to see if it could find support independently for Syntex' conspiracy and monopoly claims.

Section 603 (19 U.S.C. 2482) provides the following authority to the ITC:

> (a) In order to expedite the performance of its function under this chapter, the International Trade Commission may conduct preliminary investigations, determine the scope and manner of its proceedings, and consolidate proceedings before it.
>
> (b) In performing its functions under this chapter, the Commission may exercise any authority granted to it under any other Act.

Petitioner asserts that the above language of § 603 restricts the use of this authority to investigations under 19 U.S.C. Chapter 12, and, therefore, cannot be used in connection with a § 337 investigation, that section being found in Chapter 4. I agree with the Government, however, that § 603, enacted as part of the Trade Act of 1974, is a provision of more general applicability and may be used in connection with the ITC's jurisdiction under § 337. The historical note to section 1 of the Trade Act of 1974 advises that the words "this Chapter" in § 603 do not appear in the original, that is, the statute which was actually passed. In the original, the words are "this Act" meaning the Trade Act of 1974, which in addition to enacting the provisions in Chapter 12 also amended sections of the Tariff Act of 1930, including § 337. The Commission was, therefore, acting within its legal authority in making a preliminary investigation under § 603 in order to decide whether to institute a § 337 investigation.

The report of the results of the § 603 preliminaryin vestigation, which is part of the record here, became the basis for the Commission's

ultimate conclusion on September 19, 1980, that there was no evidence of any conspiracy and the Commission, accordingly, voted not to institute a § 337 investigation. The report is extensive and thorough and shows no abuse of authority in the final acts of the Commission on this matter.

THE SECTION 603 REPORT

A preliminary investigation under § 603 was conducted by the Commission from February 20, 1980, until August 20, 1980, for the purpose of determining whether imports of calcium pantothenate from Japan were the subject of a combination, contract or conspiracy to restrain trade and commerce in the United States, or the subject of a scheme to monopolize the d-cal pan and/or dl-cal pan markets in the United States as a result of which U.S. companies have been forced out of these markets. It is stated in the Commission report, U.S. I.T.C. Publication 1104, October 1980, that the investigation was conducted following dismissal of a complaint by Syntex in order to determine whether Syntex's charges merited a § 337 investigation in spite of the paucity of hard information in the complaint.

The ITC report determined that the relevant product market in issue in the investigation was cal pan, with submarkets of d- and dl-cal pan, the area of effective competition being the continental United States. Information acquired through interviews established that those companies that ceased production of cal pan did so primarily because of environmental problems which required the construction of prohibitively expensive new plants and the use of new technologies which were unavailable to them. Since the cost of imported cal pan was reasonable, these companies decided to cease production and to supply their customer and own needs by purchasing d- and/or dl-cal pan from foreign and domestic producers. In 1978–79 two U.S. producers, Diamond Shamrock and Thompson-Hayward, which had been producers of dl-cal pan and ceased this operation, re-entered the market with d-cal pan after acquiring new technology and constructing new state-of-the-art production facilities. Syntex's allegation (in October 1979) that there were no domestic producers of d-cal pan since it ceased production in 1975 was erroneous.

The report further found that a Japanese manufacturer, Daiichi Seiyaku, which was virtually the only supplier of d-cal pan during 1976–79, had become so because of *patented technology* which made it, as a practical matter, the only d-cal pan source for the world market. Syntex, which in the early '70's was the only U.S. source for d-cal pan, ceased production in 1975. The report further found that the technology used by Syntex was that of the state-of-the-art in the late 1940's and was obsolete. Syntex also encountered insurmountable

problems from EPA and FDA regulations with attendant financial consequences. Those events, and not price competition, coalesced to create the critical factors which caused Syntex to cease production of d-cal pan. While Daiichi then acquired what could be considered a monopoly share of the market, this was found to be only temporary with new entrants eroding the Japanese company's position.

The report found that the pricing data on Japanese d-cal pan showed no indication of artificial raising of prices to recoup losses sustained for the purpose of attaining market domination. Rather, the price in the United States increased only gradually and, according to the new domestic entrants into the d-cal pan market, the prices had not yet risen to the level these companies would like to see. Moreover, the Japanese prices did not show an immediate lowering upon entry of competitors into the d-cal pan market. This absence of attack on new competitors underscored an absence of anticompetitive behavior by the Japanese company. The report also noted the increased presence of Roche Products, Inc., a Scottish company, in the d-cal pan submarket, which is expected to lead to rapid erosion of the Japanese producer's market share.

Syntex has at all times remained a producer of dl-cal pan. With respect to this submarket, the investigation disclosed a plethora of producing competitors located in Japan, the United States, and Eastern bloc countries. The sole Japanese producer of dl-cal pan at no time held a monopoly share of the market.[5] The report finds the dl-cal pan (as well as the d-cal pan) submarket to be the subject of healthy and vigorous competition.

The officers of Syntex had no evidence of even the most circumstantial nature which would indicate anticompetitive conduct by Japanese producers in either the d-cal pan or dl-cal pan submarkets.

The staff found no evidence of predatory pricing, that is, pricing below average variable costs. The economic data urged by Syntex was not supportable because of basic flaws in its position which depended upon an assumption that Japanese companies could not be substantially more efficient than Syntex. The staff analyzed the structure of the cal pan market in Japan and found that it was more specialized and utilized better technology. In particular, the processes used enabled Japanese producers to recycle by-products and obtain significantly increased yields.

Another factor noted was that Syntex is only in the dl-cal pan market, whereas there is a growing consumer preference for d-cal pan. Thus, erosion of its market for dl-cal pan was predictable.

---

[5] This company, Alps Pharmaceutical Co. Ltd., and its U.S. distributor, Mitsui & Co., were the only named conspirators in the Syntex § 337 complaint.

Finally, the report stated that no U.S. firm, including Syntex, nor any individual could be found with any information from which one could be led to believe that there is any cooperation between the Japanese producers and distributors in the U.S. market, and no evidence which would establish a scheme by Japanese producers and their distributors to absorb any dumping duties.

These conclusions are found in a more than 80 page analysis of supporting data showing that better technology was to be found in Japan, competition was increasing from new entrants into the market in the United States and abroad, and deficiencies existed in Syntex's cost analyses. Clearly, a substantial and conscientious effort was made to determine if there was a reasonable basis to go forward with a § 337 investigation, notwithstanding the insufficiency of the dismissed complaint. I see no action of the ITC which is arbitrary, capricious or an abuse of discretion in not instituting a § 337 investigation, given the results of the § 603 preliminary investigation.

CONCLUSION

The ITC not having acted beyond its statutory or discretionary authority, the petition for a writ of mandamus must be dismissed.

United States Court of International Trade

One Federal Plaza
New York, N.Y. 10007

Chief Judge

Edward D. Re

Judges

Paul P. Rao
Morgan Ford
Scovel Richardson
Frederick Landis
James L. Watson
Herbert N. Maletz
Bernard Newman
Nils A. Boe

Senior Judge

Samuel M. Rosenstein

Clerk

Joseph E. Lombardi

Decisions of the United States Court of International Trade

(Slip Op. 81–75)

THE BABCOCK & WILCOX COMPANY, PLAINTIFF *v.* UNITED STATES, DEFENDANT

Consolidated Court No. 80–5–00772

Motion for Review of Administrative Determination Upon an Agency Record

[Plaintiff's motion granted; defendant's cross-motion denied.]

(Dated August 20, 1981)

Harris, Berg, & Creskoff (*Stephen M. Creskoff* and *Eric I. Garfinkel* at the oral argument); *deKieffer, Berg & Creskoff* (*Donald E. deKieffer* and *Eric I. Garfinkel* on the briefs) for the plaintiff.

Stuart E. Schiffer, Acting Assistant Attorney General; *Joseph I. Liebman*, Attorney in Charge, International Trade Field Office, Commercial Litigation Branch, (*Francis J. Sailer* at the oral argument and on the brief), for the defendant.

Coudert Brothers (*Charles R. Stevens, Milo G. Coerper, Sherman E. Katz* and *John D. Maiers* of counsel) for Sumitomo Metal Industries, Ltd., amicus curiae.

Steptoe & Johnson (*Monroe Leigh, Daniel J. Plaine, Fred S. McChesney* and *Alice L. Mattice* of counsel) for Nippon Steel Corporation, amicus curiae.

RICHARDSON, *Judge:* In these consolidated actions instituted by plaintiff pursuant to 28 U.S.C. § 1581(c) and 19 U.S.C. § 1516a to review negative injury determinations of the United States International Trade Commission ["Commission"] in Investigation No. 731-TA-15 (Preliminary) relative to pipes and tubes of iron or steel from Japan, made on April 14, 1980, and June 24, 1980, respectively, plaintiff has moved pursuant to Rule 56.1 for determination of the issues in its favor upon an agency record, and defendant has cross-moved for affirmance of the Commission's determinations upon the record.

It appears from the record that on February 28, 1980, plaintiff, a domestic producer of steel pipes and boiler tubes, among other things, filed a petition simultaneously with the Department of Commerce ["Commerce"] and the Commission alleging that Japanese producers of certain pipes and tubes of steel were selling their products at less than fair value ["LTFV"] in contravention of the antidumping provisions of the Trade Agreements Act of 1979 [Pub. L. No. 96-39, 93 Stat. 144 (July 26, 1979)]. LTFV sales were alleged with respect to the following products:

(1) welded carbon steel boiler tubes (TSUS item 610.3205);

(2) seamless carbon steel boiler tubes (TSUS item 610.4920);

(3) seamless stainless and heat resisting steel boiler tubes and process pipes (TSUS items 610.5210 and 610.5215);

(4) seamless alloy steel tubes for bearings (TSUS item 610.-4600); and

(5) seamless alloy steel boiler tubes and process pipes (TSUS item 610.5270.)

On March 25, 1980, Commerce determined that plaintiff's petition was sufficient to initiate an investigation which it then commenced. However, Commerce declined to include within the scope of its investigation seamless alloy steel tubes or bearings (TSUS item 610.-4600) because it was of the opinion that plaintiff did not furnish

sufficient information to support the allegation of LTFV sales as to that product [45 FR 19284 (1980)].

Acting upon instructions from Commerce the Commission initiated Investigation No. 731-TA-15 (Preliminary) to determine whether there existed a *reasonable indication* that a domestic industry is, or has been materially injured or threatened with material injury by reason of LTFV imports of TSUS items 610.3205, 610.4920, 610.5215, and 610.5220 from Japan [45 FR 16051 (1980)].

On April 9, 1980, by a vote of 3-2, the Commission made an affirmative determination of *reasonable indication* of material injury or threat thereof to the welded carbon boiler tube industry (TSUS item 610.-3205), and a negative injury determination with respect to the seamless boiler tube and process pipe industry (TSUS items 610.4920, 610.5210, 610.5215, and 610.5270).

Thereafter, and on June 18, 1980, the Commission reopened Investigation No. 731-TA-15 (Preliminary) to *reconsider* import statistics relating to welded carbon boiler tubes (TSUS item 610.3205) which was said to be erroneous [45 FR 42898 (1980)]. And, after *reconsidering* corrected statistical data regarding TSUS item 610.3205, the Commission, by a vote of 4-1 made a negative injury determination on June 24, 1980, with respect to the welded carbon boiler tube industry [45 FR 47769 (1980)].

Plaintiff contends that the Commission's negative injury determinations in its preliminary investigation were arbitrary, capricious, an abuse of discretion, and otherwise not in accordance with law. Plaintiff argues that the Commission's concept of the relevant industries is at variance with the mandatory requirements of the Trade Agreements Act of 1979, which has resulted in the Commission's utilization of overbroad and irrelevant injury data at the expense of pertinent injury data from domestic producers not addressed by the Commission. Plaintiff also argues that the Commission was without statutory authority to reopen the preliminary investigation for reconsideration of its determination upon additional evidence.

Defendant contends that the record supports the Commission's findings as to the absence of a *reasonable indication* of material injury or the threat thereof to the domestic industries assessed by the Commission, in which contention it is joined by *Amicus Curiae* Sumitomo Metal Industries, Ltd. and Nippon Steel Corp., foreign producers and exporters of the pipe and tube products investigated. Defendant argues that the best information available to the Commission indicated that the several products plaintiff sought to have investigated had no separable identities, and that the only distinction between products which industry practice allowed was as between seamless and welded pipe and tube products.

Defendant also contends that the Commission possesses discretionary and inherent authority to reopen proceedings and reconsider its decisions. In this contention defendant is joined by *Amicus Curiae* Nippon Steel Corporation, a foreign producer of the pipe and tube products covered by the investigation. Defendant argues that, given the posture of this case, especially in view of the "egregiously erroneous" information relied upon, this court would have had little choice but to remand the case to the Commission; and the Commission's actions merely obviated this circuitous procedure, and attained the mandated corrected result without adversely affecting plaintiff's right of judicial review.

The views of the Commissioners on these issues are diverse. First, with respect to scope of the industry, Chairman Bedell and Commissioner Moore stated:

> The three seamless products—are all produced by essentially the same production methods, on the same machinery, and by the same workers. For these reasons, we have assessed the effect of the allegedly dumped imports on the U.S. industry * * * in relation to the aggregate U.S. production of the three seamless pipe and tube items. (Pub. Doc. 57, p. 5)

Commissioner Stern stated:

> In this case, where there is no absolutely clear answer to the question of scope of the domestic industry impacted by imports, it is my judgment that the information on the record in this investigation does not permit assessment by separate and identifiable product lines. Therefore, guided by the law's directive to make my findings on the basis of the best information available to the Commission at this time, I have determined that reasonable indication of injury to the domestic industry must be assessed with respect to boiler tubes and process pipes. (Pub. Doc. 57, p. 21)

Commissioner Alberger stated:

> I am uncertain whether it is feasible for a product such as seamless stainless boiler tubes * * * to be analyzed as a separate "product line" as defined by Section 771(4) (D) of the Trade Agreements Act of 1979. The record contains some information that suggests there may be good reason to make a product line distinction among the three seamless products under investigation. Further investigation would provide a better indication. Specific data are available on shipments, exports, and imports for each of the three categories of seamless pipe and tube and the one welded pipe and tube product under investigation. Only the petitioner was able to provide profit and loss data on each of these four products. Other manufacturers were apparently unable to provide such data, due to difficulty in allocating profits between products made on essentially the same machinery by the same employees. Petitioner has the same problems, but nevertheless was able

to make the allocation. It is important to note that petitioner accounts for a very substantial proportion of domestic production of each item. (Pub. Doc. 57, p. 10)

And Commissioner Calhoun stated:

> That the petitioner was able to supply data on four separate products implies the possibility of four distinct products lines against which the Commission must apply section 771(4)(D). In the time available, however, none of the other domestic producers was able to provide similar disaggregated data. This inability of the other domestic producers to provide similar disaggregated data results in confusion as to the precise character of the industry. (Pub. Doc. 57, p. 27)

Secondly, with respect to reconsideration of the Commission's affirmative preliminary injury determination of April 14, 1980, only two of the Commissioners made significant comment at the time of voting on June 24, 1980.

Commissioner Stern, who voted for reversal, stated:

> I think that I should just briefly say that as far as I'm concerned that we are conserving a great deal of Commission energy in expressing our concern for the public because we are not, in fact, dealing with new facts. In other words, this is not a further fact finding for which we are reopening the vote, but we're dealing with the same old facts. The problem was that the facts that were given were inaccurate and we are simply responding quite immediate to what was immediately recognized upon publication of our report that there were inaccuracies there. I don't believe that this is setting any precedence that we will open a case after 45 days for new facts and go into future fact finding exercises and on the product line question as far as I was concerned I voted in the negative across the board because I felt that the facts were such * * * the demand question was such that making these distinctions by product line was belying what the facts concerning demand in this case dictated. The changed information which is now available to the Commission only reinforces my original negative determination that I made in this preliminary investigation including on the question of welded carbon steel boiler tubes. And as far as I'm concerned my original views on this stand intact. (Pub. Doc. 78, pp. 4–5)

And Commissioner Calhoun, who voted for affirmance, stated:

> * * * under the statutory scheme of the '79 Act, I think we're required to reach preliminary determinations within 45 days in cases alleging subsidy or dumping and that the legislative history makes clear that the Congress recognizes the difficulties that can arise where the decision maki ng must take place based upon information collected over a short period of time necessarily requires us to render decisions based upon best information available. It is understandable, I think, for us to be uncomfortable, if not concerned, for subsequent preliminary determination informations presented which might change the outcome. In such circum-

> stances the concern seems most acute where we vote to end the investigation and subsequent information tends to support continuation of that investigation. But in circumstances compelling much less concern, I think we have one before us today. Clearly, it is burdensome in any case on both parties and the Commission to proceed with an investigation were [sic] evidence subsequently received might tend to make further inquiry unnecessary. But in such cases the procedures under the '79 Act well provide for the orderly treatment of the dilemma posed by receipt of information subsequent to an affirmative preliminary vote and this procedure is called a final investigation. I think in [sic] both sound policy and in the overall interest of the conservation of Commission, and, thus, public resources that in this kind of circumstance we should integrate the new data into the final investigation in absence of extraordinary circumstances such as, but certainly not limited to, typographical errors, clerical errors or wilful misrepresentation. Preliminary investigations should not be open because absent such a policy the Commission would [sic] faced with a regular flow of requests for opening preliminary determinations as further fact finding reveals more telling information. In these cases we would be required to undertake in many cases and parallel with final investigations some investigation relating to the request for opening the vote. Thus, we would waste resources and there would never be, really, an end to an affirmative preliminary investigation until our final determination was reached. I do not think policy nor the intent reached. I do not think policy nor the intent of the statute supports such a circumstance * * *. (Pub. Doc. 78, pp. 3–4)

Turning first to the issue of industry scope, it is to be noted that prior to the enactment of the Trade Agreements Act of 1979 the Commission had a broad grant of discretion in delineating the relevant domestic industry against which it was required to assess the effects of LTFV imports. Neither the Anti-dumping Act of 1921, nor section 303 of the Tariff Act of 1930 defined the term "industry". See: S. Rept. No. 96–249 to accompany H.R. 4537, 96th Cong., 1st Sess., p. 82(1979). The Trade Agreements Act of 1979 contains specific guidelines for the determination of the relevant "industry" or "industries", as the case may be.

Section 771(4)(A) of the Tariff Act of 1930, as amended (19 U.S.C. § 1677(4)(A)) defines the term "industry" as

> the domestic producers as a whole of a like product, or those producers whose collective output of the like product constitutes a major proportion of the total domestic production of that product.

And the term "like product" mentioned in secion 771(4)(A) is defined in section 771(10) of the Tariff Act of 1930, as amended (19 U.S.C. § 1677(10)) as

> a product which is like or in the absence of like, most similar in characteristics and uses with, the article subject to investigation under this title.

Also, Congress has provided guidelines for the application of these terms by the Commission in connection with product line assessments. Section 771(4)(D) of the Tariff Act of 1930, as amended (19 U.S.C. § 1677(4)(D)) states in relevant part

> The effect of * * * dumped imports shall be assessed in relation to the United States production of a like product if available data permit the separate identification of production in terms of such criteria as *the production process or the producer's profits.* If the domestic production of the like product has no separate identity in terms of such criteria, then the effect of the * * * dumped imports shall be assessed by the examination of the production of the narrowest group or range of products, which includes a like product for which the necessary information can be provided. (Emphasis added.)

It will be observed that section 771(4)(D) stresses the utilization of the applicable criteria *alternatively*, i.e., production process or the producer's profits. And profits, it would appear, heads the list of economic factors which Congress intended the Commission to examine in ascertaining the impact of LTFV imports on the domestic producers comprising the "industry". See: S. Rept. 96-249 to accompany H.R. 4537, 96th Cong., 1st Sess., p. 83 (1979).

Although the producer's questionnaires distributed by the Commission did not solicit profit information from the domestic producers of the subject boiler tubes and pipes (Conf. Doc. 18-25), the Commission's findings for the most part seem to indicate that all but one of the domestic producers of these products were unable to furnish the Commission with profit information. The court is unable to find that fact documented in the records before it. What does appear in the record, however, is that profit data was voluntarily supplied by plaintiff to the Commission covering each of the products under investigation, which generated the Commission's comments about profit data as noted above. There is nothing in the record to indicate that the Commission ever solicited profit data pertaining to the investigated products from the domestic producers who, together with plaintiff, were responsible for 90 percent of the total domestic output of boiler tubes and pipes.

There is no question but that section 771 (4)(D) must be read as permitting the separate assessment of products for which profit can be identified even if multiple products are produced by the same production force. The key is profit *accountability.*

The Commission's practice of rigidly adhering to a preference for isolation of all production factors supporting a product as a predicate

for ascertaining the scope of an "industry" is not in step with the more flexible standard devised by Congress in section 771(4)(D). But, in any case, it is clear that Congress intended that petitioners in antidumping proceedings should have a choice. In this regard the Senate Finance Committee report states:

> In examining the impact of imports on the domestic producers comprising the domestic industry, the ITC should examine the relevant economic factors (such as profits, productivity, employment, cash flow, capacity utilization, etc.), as they relate to the production of only the like product, if available data permits a reasonably separate consideration of the factors with respect to production of only the like product. If this is not possible *because*, for example, *of the accounting procedures in use* or practical problems in distinguishing or separating the operations of product lines, then the impact of the imports should be examined by considering the relevant economic factors as they relate to the production of the narrowest group or range of products which includes the like product and for which available data permits separate consideration. (Emphasis added.)

It appears that plaintiff's profit data was disregarded by the Commission because of its self-serving nature. However, the self-serving nature of the data should not be defeating, given the Commission's investigatory function to verify data received. Congress anticipated that petitioners in antidumping proceedings would have a stake or interest in developing the relevant facts supporting a dumping finding. Not only should the Commission have considered plaintiff's profit data in connection with its determination as to the scope of the "industry", it should have sought such data from the other domestic producers comprising the boiler tube and pipe industry before moving to the broader industry which even the Commission's own staff acknowledges to have been a mistake. (Pub. Doc. 50, p. 7.) That such other domestic producers might also have been able to isolate profit on a product-by-product basis is indicated in the Quanex Corporation's response to the Commission's questionnaire wherein it is stated, "The boiler tube market erosion caused by Japanese has taken place over a period of time and the displacement of this business has been offset by a change in product mix." (Conf. Doc. 22, p. 8)

Expansion of the Commission's inquiry to other domestic producers' profits on a product-by-product basis would have given the Commission a better overview of the impact of LTFV imports on domestic producers. It is not enough for the Commission to have singled out plaintiff's ability to increase prices in the face of a shrinking market share as being indicative of the state of good health of the industry, given plaintiff's position as the acknowledged price leader, without knowing what experiences the other domestic producers were having

in the face of import penetration attributable to LTFV sales. In this connection, it is noteworthy that Republic Steel declined to bid against the LTFV sales, noting "Customers are reluctant to give us lost sales to Japanese competitors in detail. However, we are attaching documentation of actual quotations made to our customers which we chose not to meet." (Conf. Doc. 23, p. 8)

Moreover, such a stalwart in the steel industry as United States Steel had withdrawn from the boiler tube market, stating, "The reason U.S. Steel discontinued producing welded and seamless boiler tubes was due in part to foreign imports. It was not feasible for U.S. Steel in the face of rising production costs and depressed prices from imports to make capital investment to continue to participate profitably in this market." (Conf. Doc. 25, p. 2)

On the record in this case the court agrees with plaintiff that the Commission erred as a matter of law in failing to properly apply the directives of section 771 (4)(D) in determining the scope of the "industry or industries" against which to assess the effects of LTFV imports upon the like products being investigated, in consequence of which, the Commission's determination of April 14, 1980, is not in accordance with law.

The court also agrees with plaintiff that the Commission's determination of June 24, 1980, is unlawful. It is not denied by defendant that there is no statutory authorization for the Commission to reopen a terminated preliminary investigation and reconsider its determination in the light of additional evidence. What authority there is to support this course of action is said by defendant to rest in inherent agency authority to modify or correct its decisions. However, it is a well settled principle of administrative law that a governmental agency has only those powers which are granted to it by statute. 73 C.J.S. § 48 (1951).

In any case, whatever may be the extent of the Commission's inherent authority to reconsider its decisions in the light of additional evidence, it is clear that the exercise of such authority must yield to a contrary legislative policy manifest in the governing statutes. Section 733(a) of the Tariff Act of 1930, as amended (19 U.S.C. §1673b (a)) specifically limits the Commission to making a preliminary determination on the basis of the best information available within 45 days. And the Senate Finance Committee report emphasizes that "This determination would have to be made within 45 calendar days * * *." See: S. Rept. 96–249 to accompany H.R. 4537, 96th Cong., 1st Sess., p. 64 (1979). Other passages in the legislative history indicate that a major objective of the revision is to reduce the length of the investigations undertaken by the Commission (Id., 66), and also to discourage the practice of time-consuming verification of data fur-

nished as a preliminary matter (H. Rept. 96-317 to accompany H.R. 4537, 96th Cong., 1st Sess., p. 62 (1979))—both of which circumstances are involved in the *reconsideration* undertaken by the Commission in this case.

Moreover, the House Ways and Means Committee report states, "The investigative time periods contained in the bill are stated in terms of the maximum time available to the Authority and the ITC to make their determinations. The Committee intends that these time periods be treated as maximum time periods, and that they not become the general rule. It is expected that wherever any of the determinations required under the bill can be made in a shorter time, they will be so made. (Id., p. 62)

In view of the foregoing legislative history, it is clear that the 45 day time period is *mandatory* and not *directory*. And to the extent that the Committee reopened the preliminary investigation to receive additional evidence and to verify information it had previously acted upon without verification, the reconsideration extends the statutory time period, and as such, is void.

Inasmuch as the ITC did not give proper consideration to product lines nor seek to obtain profit factors in the domestic industry in making its preliminary determination, its finding was unsupported by substantial evidence and not in accordance with law. Also, its reopening a terminated preliminary investigation and reconsidering its determination in the light of additional evidence, after the expiration of the 45 day statutory limit for making its preliminary determination, such action was also not in accordance with law. The motion of plaintiff is granted and defendant's cross-motion is denied.

This matter is remanded to the ITC for disposition consistent with the decision of this court.

Decisions of the United States Court of International Trade

Abstracts

Abstracted Protest Decisions

DEPARTMENT OF THE TREASURY, *August 24, 1981.*

The following abstracts of decisions of the United States Court of International Trade at New York are published for the information and guidance of officers of the Customs and others concerned. Although the decisions are not of sufficient general interest to print in full, the summary herein given will be of assistance to Customs officials in easily locating cases and tracing important facts.

WILLIAM T. ARCHEY,
Acting Commissioner of Customs.

DECISION NUMBER	JUDGE & DATE OF DECISION	PLAINTIFF	COURT NO.	ASSESSED	HELD	BASIS	PORT OF ENTRY AND MERCHANDISE
				Par. or Item No. and Rate	Par. or Item No. and Rate		
P81/146	Richardson, J. August 20, 1981	ITT Semiconductors Corp.	77-10-04058	Item 687.60 6% without allowance under item 807.00	Items 687.60/ 807.00 6% and subject to allowance for cost or value of silicon dice or chips	Texas Instruments Incorporated v. U.S. (Abs. P75/653, aff'd C.A.D. 1178) ITT Semiconductors v. U.S. (Abs. P78/11)	Miami American goods returned; integrated circuits and transistors containing U.S. fabricated components (silicon chips or dice)
P81/147	Maletz, J. August 20, 1981	International Seaway Trading Corp.	67/34267, etc.	Item 700.60 20%	Item 700.70 15%, 13%, 12%, 10%, 9% or 7.5%	International Seaway Trading Corp. v. U.S. (C.D. 4773)	Philadelphia Footwear
P81/148	Maletz, J. August 20, 1981	International Seaway Trading Corp.	67/59707, etc.	Item 700.60 20%	Item 700.70 15%, 13%, 12%, 10%, 9% or 7.5%	International Seaway Trading Corp. v. U.S. (C.D. 4773)	Los Angeles Footwear
P81/149	Maletz, J. August 20, 1981	International Seaway Trading Corp.	68/39662, etc.	Item 700.60 20%	Item 700.70 15%, 13%, 12%, 10%, 9% or 7.5%	International Seaway Trading Corp. v. U.S. (C.D. 4773)	New Orleans Footwear
P81/150	Maletz, J. August 20, 1981	International Seaway Trading Corp.	69/22664, etc.	Item 700.60 20%	Item 700.70 15%, 13%, 12%, 10%, 9% or 7.5%	International Seaway Trading Corp. v. U.S. (C.D. 4773)	Norfolk Footwear

Decisions of the United States Court of International Trade

Abstracts

Abstracted Reappraisement Decisions

DECISION NUMBER	JUDGE & DATE OF DECISION	PLAINTIFF	COURT NO.	BASIS OF VALUATION	HELD VALUE	BASIS	PORT OF ENTRY AND MERCHANDISE
R81/320	Re, C.J. August 20, 1981	Marubeni America Corp.	75-10-02590, etc.	Export value	Appraised values, less amount added for currency fluctuation	C.B.S. Imports Corp. v. U.S. (C.D. 4739)	Chicago Miscellaneous articles
R81/321	Re, C.J. August 20, 1981	Marubeni Iida (America) Inc.	73-6-01365	Export value	Unit values found by appraising customs official, less ocean freight and marine insurance, and without additions for currency fluctuation	C.B.S. Imports Corp. v. U.S. (C.D. 4739)	New York; San Francisco Miscellaneous articles
R81/322	Maletz, J. August 20, 1981	Mitsubishi International Corp.	R70/6868, etc.	Export value	Invoiced f.o.b. prices specified for each article	International Seaway Trading Corp. v. U.S. (C.D. 4773) wherein merchandise was held classifiable under item 700.70	Los Angeles Footwear

International Trade Commission Notices

Investigations by the U.S. International Trade Commission

DEPARTMENT OF THE TREASURY, *September 3, 1981*

The appended notices relating to investigations by the U.S. International Trade Commission are published for the information of Customs officers and others concerned.

WILLIAM T. ARCHEY,
Acting Commissioner of Customs.

In the Matter of
CERTAIN SURFACE GRINDING MACHINES AND LITERATURE FOR THE PROMOTION THEREOF } Investigation No. 337–TA–95

Notice of Commission Request for Comments Regarding Proposed Termination of Respondents Based on Settlement Agreements

AGENCY: U.S. International Trade Commission.

ACTION: A request for public comment on the proposed termination of two respondents based on settlement agreements.

SUMMARY: The settlement agreements would result in the termination of the investigation as to respondents Ralmike's Tool-A-Rama and Langford Machinery. This notice requests comments from the public on the proposed settlement agreements within thirty (30) days of publication of this notice in the Federal Register.

DATES: Comments will be considered if received within 30 days of the date of publication of this notice. Comments should conform with section 201.8 of the Commission's Rules of Practice and Procedure (19 CFR § 201.8), and should be addressed to Kenneth R. Mason, Secretary, U.S. International Trade Commission, 701 E Street NW., Washington, D.C. 20436.

best copy available

SUPPLEMENTARY INFORMATION: Complainant Brown and Sharpe Manufacturing Company and respondents Ralmike's Tool-A-Rama and Langford Machinery moved in separate joint motions for termination of this investigation as to those respondents on the basis of settlement agreements. The Commission investigative attorney supported the motions. On July 20, 1981, the presiding officer recommended that the joint motions be granted.

Notice of the institution of the investigation was published in the Federal Register of January 22, 1981 (46 FR 7107).

SETTLEMENT AGREEMENTS: The two settlement agreements, which are identical except for the differences noted, provide in pertinent part as follows:

Pending a determination by the U.S. International Trade Commission of the complaint filed in the Investigation, Respondent shall refrain from importing, buying, selling, leasing, or otherwise transferring Surface Grinding Machines into the United States directly or indirectly from Taiwan or other countries, of the type and style which

(a) are reproductions, copies, colorable imitations, or simulations of B & S [Brown and Sharpe Manufacturing Company] High Precision Surface Grinding Machines that have been sold under the designations 510, 612, 618, 824, 1024, 1030, 1244, and 1236, or

(b) are of the type offered for sale heretofore by Lian Feng Machine Co. of Taiwan, China, identified as Exhibit 14 attached to the B & S complaint in the investigation.

Respondent shall refrain from coping, reprinting, using, selling, or distributing any unauthorized copies of manuals, catalogs, brochures, or other printed material prepared or owned by B & S and bearing a B & S copyright notice.

Respondent shall refrain from using any B & S manual, catalog, or other printed material, whether or not protected by copyright, in connection with the maintenance, repair, or sale of surface grinding machines or components thereof, other than B & S surface grinding machines or components thereof.

Respondent shall refrain from importing, buying, selling, or otherwise transferring Surface Grinding Machines made in foreign countries which simulate the trade dress of B & S High Precision Surface Grinding Machines as exemplified by Exhibits 14, 15, and 16B of the Complaint filed in the Investigation.

Respondent agrees to give to B & S two copies of all catalogs, manuals, advertisements, and promotional pieces promoting or making reference to surface grinding machines made by Lian Feng Machine Co. that have been used, sold or distributed by Respondent.

Respondent shall deliver to B & S prior to March 27, 1981 in affidavit form a statement relating to Respondent's purchase and sale of surface grinding machines made or sold by Lian Feng Machine Co., including (a) the total number purchased; (b) the dates of purchase; (c) the price paid; (d) the total number in inventory; (e) the total number sold; (f) the price of each sale; (g) the date of each sale.

Respondent shall deliver to B & S prior to March 27, 1981, all copies of catalogs, manuals, and advertisements in its possession that were prepared by or for Lian Feng Machine Co. that contain reference to surface grinding machines that are reproductions, copies, colorable imitations, or simulations of B & S High Precision Surface Grinding Machines that have been sold under the designations 510, 612, 618, 824, 1024, 1030, 1244, and/or 1236.

B & S and the Respondent agree to file a joint motion before the U.S. International Trade Commission to terminate the Investigation with respect to Respondent without prejudice.

B & S agrees to refrain from instituting any civil action for any matters which have been raised in the complaint filed before the U.S. International Trade Commission.

B & S hereby releases the Respondent from claims of copyright and trademark infringement and unfair competition arising from those issues raised in the B & S complaint filed in the Investigation.

In paragraphs 1(a) and 7, Brown and Sharpe's agreement with Ralmike's Tool-A-Rama includes high precision surface grinding machines designated as 818.

In paragraph 2, Brown & Sharpe's agreement with Ralmike's Tool-A-Rama includes the following:

> Respondent shall refrain from printing, distributing, or authorizing the printing or distributing of any promotional material containing references to B & S or its tradmarks, except in connection with the sale or servicing of B & S equipment.

In paragraph 10, Brown & Sharpe's agreement with Ralmike's Tool-A-Rama provides as follows:

> B & S hereby releases the Respondent from any and all claims arising from those issues raised in the B & S Complaint filed in the investigation, including, but not limited to copyright and trademark infringement and unfair competition.

WRITTEN COMMENTS REQUESTED: In order to discharge its statutory obligation to consider the public interest, the Commission seeks written comments from interested persons regarding the effects of terminating this investigation as to respondents Ralmike's Tool-A-Rama and Langford Machinery on the basis of the settlement agree-

ments on (1) the public health and welfare, (2) competitive conditions in the U.S. economy, (3) the production of like or directly competitive articles in the United States, and (4) U.S. consumers. All written comments must be filed with the Secretary to the Commission no later than 30 days after the date of publication of this notice in the Federal Register. In addition, pursuant to 19 CFR § 210.14(a)(2), the Commission has requested comments from the Department of Health and Human Services, the Department of Justice, the Federal Trade Commission, and the U.S. Customs Service.

ADDITIONAL INFORMATION: The original and 19 copies of all written submissions must be filed with the Secretary to the Commission, 701 E Street NW., Washington, D.C. 20436, telephone 202–523–0161. All comments must be filed no later than 30 days after the date of publication of this notice in the Federal Register. Any person desiring to submit a document (or portion thereof) to the Commission in confidence must request *in camera* treatment. Such requests should be directed to the Secretary to the Commission and must include a full statement of the reasons why the Commission should grant such treatment. The Commission will either accept the submission in confidence or return it. All nonconfidential written submissions will be available for public inspection at the Secretary's office.

FOR FURTHER INFORMATION CONTACT: Clarease E. Mitchell, Esq., Office of the General Counsel, U.S. International Trade Commission, 701 E Street NW., Washington, D.C. 20436; telephone 202–523–0148.

By order of the Commission.

Issued: August 26, 1981.

KENNETH R. MASON,
Secretary.

In the Matter of
CERTAIN AIRTIGHT CAST-IRON STOVES } Investigation No. 337-TA-106

Notice of Termination of Investigation and Issuance of Consent Orders

AGENCY: U.S. International Trade Commission.

ACTION: Termination of investigation and issuance of consent orders.

SUMMARY: Notice is hereby given that the U.S. International Trade Commission has approved and issued two consent orders in the above-captioned investigation, thereby terminating the investigation.

SUPPLEMENTARY INFORMATION: In connection with the complaint filed on May 21, 1981, under section 337 of the Tariff Act of 1930 (19 USC 1337) alleging unfair acts and methods of competition in the importation into or the sale in The United States of certain airtight cast-iron stoves, the Commission investigative attorney and the respondents entered into a consent order agreement. The Commission investigative attorney is the complaining party and the respondents are Franklin Cast Products, Inc., of Warwick, Rhode Island, and Oriental Kingsworld Industrial Company Ltd., of Taipei, Taiwan. In a notice of investigation published in the Federal Register on July 8, 1981 (46 FR 35386), the Commission stated that the investigation was being undertaken to determine whether section 337 is being violated by reason of false and deceptive advertising, the passing off of imported copies as domestic airtight cast-iron stoves, and the infringement of certain common-law trademarks.

Copies of the Commission's Action and Order, the consent orders, and all other non-confidential documents in the record of this investigation are available for inspection during official business hours (8:45 a.m. to 5:15 p.m.) in the Office of the Secretary, U.S. International Trade Commission, 701 E Street NW., Washington, D.C. 20436, telephone 202-523-0161.

FOR FURTHER INFORMATION CONTACT: Jeffrey S. Neeley, Esq., Office of the General Counsel, U.S. International Trade Commission, telephone 202-523-0359.

By order of the Commission.

Issued: August 26, 1981.

KENNETH R. MASON,
Secretary.

Investigation No. 22-44

CASEIN

AGENCY: United States International Trade Commission.

ACTION: Institution of an investigation under section 22(a) of the Agricultural Adjustment Act (7 USC 624(a)) to determine whether lactalbumin and casein and mixtures in chief value of casein, provided for in items 190.15 and 493.12 and 493.17 of the Tariff Schedules of the United States, are being or are practically certain to be imported into the United States under such conditions and in such quantities as to render or tend to render ineffective, or materially interfere with, the price-support program for milk of the Department of Agriculture,

or to reduce substantially the amount of products processed in the United States from domestic milk.

EFFECTIVE DATE: August 24, 1981

FOR FURTHER INFORMATION CONTACT: Mr. J. Frederick Warren, 202–724–0090, or Mrs. Bonnie J. Noreen, 202–523–1255.

SUPPLEMENTARY INFORMATION:

Background: The investigation (No. 22–44) was instituted following receipt of a letter dated August 5, 1981, from the President directing the Commission to conduct it. The letter stated that the President agreed with advice from the Secretary of Agriculture that there is reason to believe that casein and mixtures in chief value thereof and lactalbumin are being imported or are practically certain to be imported under such conditions and in such quantities as to materially interfere with the price-support program for milk undertaken by the Department of Agriculture.

Public hearing: The Commission will hold a public hearing in connection with this investigation beginning at 10 a.m., e.s.t., on Monday, November 9, 1981, in the Hearing Room of the U.S. International Trade Commission Building, 701 E Street NW., Washington, D.C. Requests to appear at the hearing should be filed in writing with the Secretary to the Commission not later than the close of business (5:15 p.m., e.s.t.) on October 28, 1981. For further information concerning the conduct of the investigation, hearing procedures, and rules of general application, consult the Commission's Rules of Practice and Procedure, part 204 (19 CFR 204) and part 201 (19 CFR 201).

Prehearing procedures: A prehearing conference will be held on Thursday, October 29, 1981, at 10:00 a.m., e.s.t., in Room 117 of the U.S. International Trade Commission Building.

To facilitate the hearing process, it is requested that persons wishing to appear at the hearing submit prehearing briefs enumerating and discussing the issues which they wish to raise at the hearing. Nineteen copies of such prehearing briefs should be submitted to the Secretary to the Commission no later than the close of business on November 2, 1981. Copies of any prehearing briefs submitted will be available for public inspection in the Office of the Secretary. While submission of prehearing briefs does not prohibit submission of prepared statements in accordance with section 201.12(d) of the Commission's Rules of Practice and Procedure (19 CFR 201.12(d)), statements are unnecessary if briefs are submitted. Oral presentation should, to the extent possible, be limited to issues raised in the prehearing briefs.

Persons not represented by counsel or public officials who have

relevant matters to present may give testimony without regard to the suggested prehearing procedures outlined in this notice.

Written submissions: In addition to or in lieu of an appearance at the hearing, interested persons may submit to the Commission a written statement of information pertinent to the subject matter of this investigation. Written statements should be addressed to the Secretary to the Commission, 701 E Street NW., Washington, D.C. 20436, and must be received not later than November 20, 1981. All written submissions, except for confidential business data, will be available for public inspection.

Any business information which a submitter desires the Commission to treat as confidential must be submitted separately, and each sheet must be clearly marked at the top "Confidential Business Data." Confidential submissions must conform with the requirements of section 201.6 of the Commission's Rules of Practice and Procedure (19 CFR 201.6). All written submissions, except for confidential business data, will be available for public inspection.

By order of the Commission.

Issued: August 25, 1981.

KENNETH R. MASON,
Secretary.

In the Matter of
CHLOROFLUOROHYDROCARBON DRY-CLEANING PROCESS, MACHINES AND COMPONENTS THEREFOR } Investigation No. 337–TA–84

Notice of Partial Waiver of Rule 210.51(c)

AGENCY: U.S. International Trade Commission.

ACTION: Notice is hereby given that the Commission has granted a motion to partially waive the requirements of rule 210.51(c) of the Commission's Rules of Practice and Procedure (19 CFR 210.51(c)) in this investigation.

SUMMARY: On August 24, 1981, the Commission granted a motion (Motion 84–29) for a partial waiver of rule 210.51(c) in the above-captioned investigation.

FOR FURTHER INFORMATION CONTACT: Jack Simmons, Esq., Office of the General Counsel, U.S. International Trade Commission, telephone (202) 523–0350.

SUPPLEMENTARY INFORMATION: On July 1, 1981, the complainant, all respondents, and the Commission investigative

attorney filed a joint motion (Motion 84–28) to terminate the above-captioned investigation, pursuant to rule 210.51(a) of the Commission's Rules of Practice and Procedure, on the basis of a settlement agreement executed by all the parties. On July 22, 1981, the Commission investigative attorney filed a motion (Motion 84–29) to partially waive the requirements of rule 210.51(c) of the Commission's Rules of Practice and Procedure as authorized by rule 210.4(b) (19 CFR 201.4(b)).

On July 28, 1981, the presiding officer recommended that the motion be granted.

Rule 210.51(c) requires that a motion for termination of an investigation on the basis of a settlement agreement contain an affidavit executed by the parties stating that there are no other agreements concerning the subject matter of the investigation. The Commission waived the affidavit requirement because the settlement agreement incorporates the substance and purposes of the affidavit, because it was negotiated in the presence of the Commission investigative attorney, because it is likely to be time-consuming to obtain affidavits from all the parties, and because the affidavits would add nothing to the substance of the agreement.

By order of the Commission.

Issued: August 24, 1981.

KENNETH R. MASON,
Secretary.

In the Matter of CERTAIN AUDIOVISUAL GAMES AND COMPONENTS THEREOF (VIZ, PAC MAN AND RALLY-X)	Investigation No. 337–TA–105

Notice of Amendment of Complaint

AGENCY: U.S. International Trade Commission.

ACTION: Notice is hereby given that the Commission has granted a motion pursuant to section 210.22(a) of the Commission's Rules of Practice and Procedure to amend the complaint in this investigation.

SUMMARY: On August 24, 1981, the Commission granted a motion (Motion 105–7) to amend the complaint in this investigation by adding an allegation of copyright and trademark infringement of complainant Midway Manufacturing Company's Rally-X game by respondent Artic International, Inc.

FOR FURTHER INFORMATION CONTACT: Jack Simmons, Esq., Office of the General Counsel, U.S. International Trade Commission, telephone 202–523–0350.

SUPPLEMENTARY INFORMATION: On August 3, 1981, complainant moved (Motion 105–7) to amend the complaint by addition of an allegation that respondent Artic International, Inc., is infringing complainant's copyright and trademark rights in the Rally-X game. Artic opposed the motion. On August 14, 1981, the presiding officer issued a recommended determination that the motion be granted.

By order of the Commission.

Issued: August 24, 1981.

KENNETH R. MASON,
Secretary.

In the Matter of CHLOROFLUOROHYDROCARBON DRY-CLEANING PROCESS, MACHINES AND COMPONENTS THEREFOR	Investigation No. 337–TA–84

Notice of Settlement Agreement and Request for Public Comments

AGENCY: U.S. International Trade Commission.

ACTION: Request for public comments on the proposed termination of the above-captioned investigation on the basis of a proposed settlement agreement.

SUMMARY: Notice is hereby given that the presiding officer in the above-captioned investigation has certified to the Commission for action a joint motion to terminate the investigation, along with a settlement agreement executed by the complainant and the respondents. Before taking final action on the proposed termination of this investigation, the Commission requests that interested members of the public submit written comments thereon.

DATES: In order to be considered, comments must be received on or before (Insert date 30 days after publication in the Federal Register).

FOR FURTHER INFORMATION CONTACT: Jack Simmons, Esq., Office of the General Counsel, U.S. International Trade Commission, telephone (202) 523–0350.

SUPPLEMENTARY INFORMATION:

BACKGROUND

On July 1, 1981, the complainant, all respondents, and the Commission investigative attorney filed a joint motion (motion 84–28) to terminate the investigation pursuant to rule 210.51(a) of the Commission's Rules of Practice and Procedure on the basis of a settlement agreement executed by all the parties. On July 22, 1981, the Commission investigative attorney filed a motion (motion 84–29) for a partial waiver of the requirements of rule 210.51(c) of the Commission's rules as authorized by rule 201.4(b).

On July 28, 1981, the presiding officer (Judge Duvall) recommended that both motions 84–28 and 84–29 be granted. The Commission granted Motion 84–29, and the proposed termination of this investigation based on the settlement agreement is now before the Commission.

THE SETTLEMENT AGREEMENT

The substantive provisions of the settlement agreement are summarized as follows:

Preamble: The agreement is made between complainant Research Development Company and respondents E. I. duPont de Nemours & Co.; American Permac, Inc.; Harvcons Universal, Inc.; Spencer America, Inc.; Bowe Maschinenfabrik Gmbh; A.M.A. Universal S.P.A.; Neil & Spencer, Ltd.; I. Golfarb & Sons; Macchine Suprema; United Tex-Care Co.; and Union S.R.L.

Complainant warrants that it is the owner of all rights in U.S. Letters Patent 3,728,074, and that it has asserted and continues to assert that machines manufactured by respondents are used to perform a process which infringes one or more claims of its patent.

Paragraph 1. The agreement incorporates all agreements and understandings between the parties regarding the subject matter of the investigation.

Paragraph 2. Complainant, its successors and/or assigns, grants an irrevocable nonexclusive license under the claims of the patent to foreign manufacturers Bowe, Neil & Spencer, AMA, Union, and Suprema, and to their successors and/or assigns, to sell or use in the United States imported machines which perform the process claimed in the patent.

Paragraph 3. In consideration of the license granted in paragraph 2, each of the said manufacturers shall pay a royalty to complainant of 2 percent of the first $2,500.00 and 1 percent on any remaining portion of the f.o.b. (plant of manufacture) wholesale price of the alleged infringing machines imported into the United States.

Paragraph 4. Complainant, its successors and/or assigns, grants an irrevocable nonexclusive license under the claims of the patent to Du Pont, Harvcons, United Tex-Care, Spencer America,

Permac, and Goldfarb (which are the firms which have allegedly imported such machinery during the 6 years preceding this investigation), and to their successors and/or assigns, to sell and/or use in the United States imported machines which perform the process claimed in the patent.

Paragraph 5. In consideration of the license granted in paragraph 4, each of the said importers shall pay a royalty to complainant, to be calculated as set forth above, if said machines are imported from a foreign manufacturer other than the respondents herein.

* * * * * * *

Paragraph 8. The manufacturers set forth in paragraph 2 shall pay a royalty as set forth in paragraph 3 for each of the manufacturers' machines licensed to perform the patented process and imported into the United States on or after April 17, 1980.

Paragraph 9. The importers set forth in paragraph 4 shall pay a royalty as set forth in paragraph 5 for each of the machines licensed to perform the patented process and imported into the United States by or for the said importers on or after April 17, 1980.

* * * * * * *

Paragraph 11. No respondent admits that the patent is valid, that any machine imported into the United States infringes it, that any respondent has induced or contributed to infringement, or that any imported machine is capable of infringing the patent.

Paragraph 12. The agreement terminates on the expiration date of the patent or upon a declaration of invalidity by a court of competent jurisdiction.

The complete text of the settlement agreement, except for confidential business information contained therein, is available for public inspection during normal business hours (8:45 a.m. to 5:15 p.m.) at the Office of the Secretary, U.S. International Trade Commission, 701 E Street NW., Washington, D.C. 20436.

SUBMISSION OF COMMENTS

All comments should conform to rule 201.8 of the Commission's Rules of Practice and Procedure (19 CFR 210.8) and should be addressed to the Secretary, U.S. International Trade Commission, 701 E Street NW., Washington, D.C. 20436. All comments should reference investigation No. 337–TA–84.

By order of the Commission.

Issued: August 24, 1981.

KENNETH R. MASON,
Secretary.

Index

U.S. Customs Service

	T.D. No.
Treasury decisions:	
Carrier bonds	81-228
Drawback contract, sec. 1313(a)	81-234
Foreign currencies:	
Daily rates: August 10-14, 1981	81-235
Variances: August 10-14, 1981	81-236
Restriction on entry:	
Costa Rica, manmade	81-232
Korea, cotton	81-230
Macau, cotton	81-233
Sri Lanka, cotton	81-229, 81-231
Customs service decisions:	
A drawback claim and Fifo accounting method	81-210
Applicability of coastwise laws	81-194
Bonds: Obligors on a foreign trade zone	81-209
Classification:	
Costs incurred	81-191
Insulated boot	81-204
"Kung Fu" shoes	81-193
Nonfunctional stitching	81-201
Surf-Sailers	81-195
Copyright infringement: Imported stuffed bears	81-198
Drawback: This ruling establishes parameters	81-203
Entry:	
Date of entry of a shipment	81-199
Liquidation of merchandise	81-200
Validity of liquidation	81-208
Foreign trade zone: Whether privilege status can be granted	81-192
No basis in law supporting a demand	81-207
Trademark Violation: Prohibited importations into the U.S.	81-197
Value: Entries of industrial sewing machine needles	81-205
Vessels:	
Converting a vessel's engine coding system	81-206
In a day chartering operation	81-196
Research and carrying no merchandise and no persons	81-202

Court of Customs and Patent Appeals

	C.A.D. No.
Rank Precision Industries, Inc., v. The United States	1269
	Appeal No.
Syntex Agribusiness, Inc., v. The U.S. International Trade Commission; Mitsui & Co. and Alps Pharmaceutical Co., Ltd	81-8

DEPARTMENT OF THE TREASURY
U.S. CUSTOMS SERVICE
WASHINGTON, D.C. 20229

OFFICIAL BUSINESS
PENALTY FOR PRIVATE USE, $300

POSTAGE AND FEES PAID
DEPARTMENT OF THE TREASURY (CUSTOMS)
(TREAS. 552)

U.S.MAIL

U.S. GOVERNMENT PRINTING OFFICE : 1981

15/38

Customs Bulletin

Regulations, Rulings, Decisions, and Notices concerning Customs and related matters

and Decisions

of the United States Court of Customs and Patent Appeals and the United States Court of International Trade

Vol. 15 SEPTEMBER 23, 1981 No. 38

NEWARK PUBLIC LIBRARY

OCT 2 1981

U. S. GOVT. PUBS.
DEPOSITORY 376

This issue contains

T.D. 81-237 Through 81-245
Proposed Rulemaking
Slip Op. 81-76 Through 81-78
International Trade Commission Notice

THE DEPARTMENT OF THE TREASURY
U.S. Customs Service

T1. 11/3:

NOTICE

The abstracts, rulings, and notices which are issued weekly by the U.S. Customs Service are subject to correction for typographical or other printing errors. Users may notify the U.S. Customs Service, Logistics Management Division, Washington, D.C. 20229, of any such errors in order that corrections may be made before the bound volumes are published.

For sale by the Superintendent of Documents, U.S. Government Printing Office, Washington, D.C. 20402. Price: $2.25 (single copy domestic); $2.85 (single copy foreign). Subscription price: $85.00 a year domestic; $106.25 a year foreign.

U.S. Customs Service

Treasury Decisions

(T.D. 81-237)

Bonds

Approval of Carrier's Bond, Customs Form 3587, amendment of T.D. 81-30

T.D. 81-30 relating to the temporary approval of the Carrier's Bond of the following principal is hereby amended as necessary to show that such bond has been permanently approved as noted below.

Dated: September 2, 1981.

	Effective date of permanent authority
Principal: Don's Trucking, Inc	June 11, 1981

GEORGE C. STEUART
(For Marilyn G. Morrison, Director,
Carriers, Drawback and Bonds Division).

(T.D. 81-238)

Foreign Currencies—Daily Rates for Countries Not on Quarterly List

The Federal Reserve Bank of New York, pursuant to section 522(c), Tariff Act of 1930, as amended (31 U.S.C. 372(c)), has certified buying rates for the dates and foreign currencies shown below. The rates of exchange, based on these buying rates, are published for the information and use of Customs officers and others concerned pursuant to Part 159, Subpart C, Customs Regulations (19 CFR 159, Subpart C).

Argentina peso:	
August 17-20, 1981	$0.000197
August 21, 1981	.000194
Chile peso:	
August 17-21, 1981	$0.025575

Colombia peso:	
August 17–20, 1981	$0. 018242
August 21, 1981	. 018018
Greece drachma:	
August 17, 1981	$0. 016155
August 18, 1981	. 016502
August 19, 1981	. 016340
August 20, 1981	. 016434
August 21, 1981	. 016598
Indonesia rupiah:	
August 17–21, 1981	$0. 001582
Israel shekel:	
August 17–21, 1981	$0. 080000
Peru sol:	
August 17–21, 1981	$0. 002287
South Korea won:	
August 17–21, 1981	$0. 001454

(LIQ–03–01 O:C:E)

Dated: August 21, 1981.

KENNETH A. RICH,
Acting Chief,
Customs Information Exchange.

(T.D. 81–239)

Foreign Currencies—Variances From Quarterly Rate

The following rates of exchange are based upon rates certified to the Secretary of the Treasury by the Federal Reserve Bank of New York, pursuant to Section 522(C), Tariff Act of 1930, as amended (31 U.S.C. 372(c)), and reflect variances of 5 per centum or more from the quarterly rate published in Treasury Decision 81–183 for the following countries. Therefore, as to entries covering merchandise exported on the dates listed, whenever it is necessary for Customs purposes to convert such currency into currency of the United States, conversion shall be at the following rates.

Brazil cruzeiro:	
August 17–18, 1981	$0. 010090
August 19–21, 1981	. 009902
Hong Kong dollar:	
August 17, 1981	$0. 168421
August 18, 1981	. 168379
August 19, 1981	. 167645

August 20, 1981	.168407
August 21, 1981	.169062
Republic of South Africa rand:	
August 17, 1981	$1.0565
August 18, 1981	1.0572
August 19, 1981	1.0560
August 20, 1981	1.0605
August 21, 1981	1.0630
Spain peseta:	
August 17, 1981	$0.009872
August 18–21, 1981	Quarterly
Thailand baht (tical):	
August 17–21, 1981	$0.043384

(LIQ-03-01 O:C:E)

Dated: August 21, 1981.

KENNETH A. RICH,
Acting Chief,
Customs Information Exchange.

(19 CFR Part 151)

(T.D. 81-240)

CUSTOMS REGULATIONS AMENDMENTS RELATING TO THE EXAMINATION OF MERCHANDISE

AGENCY: U.S. Customs Service, Department of the Treasury.

ACTION: Final rule.

SUMMARY: This document amends the Customs Regulations to provide that: (1) at ports of entry specifically designated by the Commissioner of Customs, the district director of Customs is authorized to release, without examination, merchandise of a character which he has determined need not be examined in every instance to ensure the protection of the revenue and enforcement of Customs and other laws; and, (2) the district director shall order the examination of such packages or quantities of merchandise as he deems necessary to ensure compliance with the Customs laws and any other laws enforced by the Customs Service.

The amendments will allow Customs to improve the effectiveness of Customs cargo inspections and to expedite the entry of merchandise.

EFFECTIVE DATE: October 13, 1981.

FOR FURTHER INFORMATION CONTACT: Victor Weeren, Office of Inspection, U.S. Customs Service, 1301 Constitution Avenue, NW., Washington D.C. 20029 (202–566–5354).

SUPPLEMENTARY INFORMATION:

BACKGROUND

Section 499, Tariff Act of 1930, as amended (19 U.S.C. 1499), provides that not less than one package of every invoice and not less than one of every 10 packages of imported merchandise shall be opened and examined. However, if the Secretary of the Treasury, from the character and description of the merchandise, is of the opinion that examination of a lesser proportion of packages will amply protect the revenue, by special regulation or instruction, the application of which may be restricted to one or more individual ports, one or more importations, or to one or more classes of merchandise, he may permit a lesser number of packages to be examined.

Section 151.2, Customs Regulations (19 CFR 151.2), implements 19 U.S.C. 1499 by providing that not less than one of every 10 packages of merchandise shall be examined unless a special regulation permits a lesser number of packages to be examined. Section 151.2 further provides that district directors are authorized specially to examine less than one of every 10 packages, but not less than one package of every invoice, in the case of any merchandise imported in packages: (1) the contents and values of which are uniform; or, (2) the contents of which are identical as to character although differing as to quantity and value per package.

Section 151.1, Customs Regulations (19 CFR 151.1), provides that the district director shall examine such packages or quantities of merchandise as he deems necessary for the determination of duties and for other Customs purposes.

To improve the effectiveness of cargo inspections and to expedite the entry of merchandise, Customs published a notice in the Federal Register on November 19, 1980 (45 FR 76449), proposing to amend:

(1) Section 151.2(a) to provide that, at ports of entry specifically designated by the Commissioner of Customs, the district director would be authorized to release, without examination, merchandise of a character which the district director has determined need not be examined in every instance to ensure protection of the revenue and enforcement of Customs and other laws; and,

(2) Section 151.1 to clarify that Customs officers may examine shipments to ensure compliance with any other laws enforced by the Customs Service, as well as with the Customs laws.

The notice invited interested persons to submit comments regarding

the proposal by January 19, 1981. In response, 27 comments were received from individuals, members of Congress, corporations, ports and port authorities, customs brokers, freight forwarders, and trade associations. Of the comments received, 23 unquestionably favor the proposal. These commenters are of the opinion that the change would result in a smoother flow of cargo due to more efficient use of Customs manpower, fewer time delays, and reductions in importer costs, particularly due to fewer demurrage charges.

Three commenters oppose the change. One of the opposing commenters points to the potential for encouraging fraud and collusion because some cargo will not be examined at designated ports.

The potential for fraud always is present. However, Customs is able to control this with its enforcement units—Investigations, Regulatory Audit, Patrol, and Special Enforcement Teams. The commodity knowledge of the import specialists and their participation with Customs enforcement units also are effective in detecting and deterring fraud and deceptive practices. Further, existing automated and manual information systems, as well as those under development, are designed to provide detailed information to aid in this process. These enforcement efforts will not be affected by the adoption of this proposal.

Effective with implementation of these changes, a random percentage of imports will continue to be selected for intensive examination. Also, at any time the district director may order an intensive examination of merchandise which he previously had exempted from examination. In addition, audits will be conducted in ports where this type of selective examination is in operation. Customs is of the opinion that these additional checks will provide deterrence factors.

Another commenter expresses concern that great care must be taken to distinguish between similar types of merchandise which are dutiable at different rates depending on the intended use.

Customs agrees. However, we do not anticipate that this will be a problem because verification of intended use of merchandise is made at the time the merchandise is classified for tariff purposes, not at the time of inspection. This change will not affect that procedure.

The third commenter opposed to the proposal is of the opinion that it exceeds the authority of 19 U.S.C. 1499, because it contemplates the release of merchandise, no part of which has been examined.

After a detailed review of the applicable statutory and case law, Customs has determined that the proposal is within the authority of 19 U.S.C. 1499.

In addition, one commenter, without addressing the desirability of the proposal, questions the legality of delegating this authority to the district director.

Section 2 of Reorganization Plan No. 26 of 1950 eff. July 13, 1950, 15 FR 4935, 64 Stat. 1280) provides that the Secretary of the Treasury may authorize the performance by any other officer, or by any agency or employee, of the Department of the Treasury of any function of the Secretary. This plan was promulgated under the authority of the Reorganization Act of 1949, Pub. L. 109, 81st Cong., 63 Stat. 203, section 3 of which specifically authorized the President to authorize any officer to delegate any of his functions if that would promote more effective management, promote economy or increase the efficiency of the executive branch of Government.

Customs is of the opinion that the effect of the Reorganization Act of 1949 and Reorganization Plan No. 26 of 1950 is to permit the Secretary to delegate to subordinate officers the determination that examination of a less proportion of packages will amply protect the revenue as provided in the statute.

EXECUTIVE ORDER 12291

Because this will not result in a "major rule" as defined by section 1(b) of Executive Order 12991, the regulatory impact analysis and review prescribed by section 3 of the Executive Order is not required

INAPPLICABILITY OF REGULATORY FLEXIBILITY ACT

This document is not subject to the provisions of sections 603 and 604 of Title 5, United States Code (as added by section 3 of Pub. L. 96–354, the "Regulatory Flexibility Act") because it was the subject of a notice of proposed rulemaking issued before January 1, 1981, the effective date of the Act.

DRAFTING INFORMATION

The principal author of this document was Lawrence P. Dunham, Regulations and Information Division, U.S. Customs Service. However, personnel from other Customs offices participated in its development.

ADOPTION OF THE PROPOSED REGULATIONS

The proposed regulations set forth in the notice published in the Federal Register on November 19, 1980 (45 FR 76449), are adopted as set forth below.

WILLIAM T. ARCHEY,
Acting Commissioner of Customs.

Approved: August 27, 1981.

JOHN P. SIMPSON,
Acting Assistant Secretary of the Treasury.

AMENDMENTS TO THE REGULATIONS

Sections 151.1 and 151.2(a), Customs Regulations (19 CFR 151.1, 151.2(a)), are revised to read as follows:

PART 151—EXAMINATION, SAMPLING, AND TESTING OF MERCHANDISE

SUBPART A—GENERAL

151.1 Merchandise to be examined.

The district director shall examine such packages or quantities of merchandise as he deems necessary for the determination of duties and for compliance with the Customs laws and any other laws enforced by the Customs Service.

151.2 Quantities to be examined.

(a)(1) *Minimum quantities.* Not less than one package of every 10 packages of merchandise shall be examined, unless a special regulation permits a lesser number of packages to be examined. District directors are specially authorized to examine less than one package of every 10 packages but not less than one package of every invoice, in the case of any merchandise which is:

(i) Imported in packages the contents and values of which are uniform, or

(ii) Imported in packages the contents of which are identical as to character although differing as to quantity and value per package.

(2) *Exceptions to minimum quantities.* At ports of entry specifically designated by the Commissioner of Customs, the district director is authorized to release, without examination, merchandise of a character which the district director has determined need not be examined in every instance to ensure the protection of the revenue and compliance with the Customs laws and any other laws enforced by the Customs Service.

(R.S. 251, as amended, secs. 499, 624, 46 Stat. 728, as amended, 759, General Headnotes 11, 12, Tariff Schedules of the United States (19 U.S.C. 66, 1202, 1499, 1624))

[Published in the Federal Register September 10, 1981 (46 FR 45128)]

(T.D. 81-241)

Synopses of Drawback Decisions

The following are synopses of drawback rates issued March 3, 1980, to September 1, 1981, inclusive, pursuant to sections 22.1 and 22.5, inclusive, Customs Regulations.

352-989 0 - 81 - 2

In the synopses below are listed for each drawback rate approved under section 1313(g), the name of the company, the specified articles on which drawback is authorized, the merchandise which will be used to manufacture or produce these articles, the factories where the work will be accomplished, the date the statement was signed, the basis for determining payment, the Regional Commissioner to whom the rate was forwarded, and the date on which it was forwarded.

Dated: September 4, 1981.

GEORGE C. STEUART
(For Marilyn G. Morrison, Director,
Carriers, Drawback and Bonds Division).

(A) Company: Bender Shipbuilding and Repair Co., Inc.
Vessels: Tugs; tug supply boats; supply boats; offshore oil vessels; cargo vessels; passenger vessels; fishing vessels.
Merchandise: Main and auxiliary machinery such as engines, gears, pumps, propellers, winches, capstans; electrical equipment; life saving and fire fighting equipment; other equipment not including that not required for safe operation of vessel, such as galley and office equipment.
Shipyard: Mobile, AL.
Statement signed: February 5, 1980.
Basis of claim: Used in.
Rate forwarded to Regional Commissioner of Customs: New Orleans, April 14, 1980.

(B) Company: Desco Marine, Division of the Whittaker Corp.
Vessels: Trawlers.
Mechandise: Four each radio telephones; radar units; echo sounders.
Shipyard: St. Augustine, FL.
Statement signed: May 4, 1981.
Basis of claim: Appearing in.
Rate forwarded to Regional Commissioner of Customs: Miami, September 1, 1981.

(C) Company: Lee-Vac, Ltd., Zigler Shipyards Division.
Vessels: Offshore tugs and supply vessels.
Merchandise: Machinery and other equipment, but not including galley and office equipment and other articles not required for safe operation of vessels.
Shipyard: Jeff Davis Parish, LA.
Statement signed: December 13, 1979.

Basis of claim: Used in.
Rate forwarded to Regional Commissioner of Customs: New Orleans, March 3, 1960.

(D) Company: Swiftships, Inc.
Vessels: Offshore tugs and supply vessels; patrol boats; ferry boats.
Merchandise: Main and auxiliary machinery such as engines, gears, pumps, propellers, winches, capstans, etc.; electrical equipment; miscellaneous equipment such as life saving and fire fighting, not to include that not required by law for the safe operation of vessel, such as galley and office equipment.
Shipyard: Morgan City and Lafitte, LA.
Statement signed: March 25, 1980.
Basis of claim: Used in.
Rate forwarded to Regional Commissioner of Customs: New Orleans, April 14, 1980.

(T.D. 81-242)

Accelerated Payment for Same Condition Drawback

The Customs Service will allow persons who claim drawback under the recently enacted same condition drawback law, Pub. L. 96-609, 94 Stat. 3555 (December 28, 1980), codified as 19 U.S.C. 1313(j), to obtain accelerated payment of drawback if certain conditions are met.

In a ruling (file No. 212709) dated March 26, 1981, published as a legal determination, L.D. 81-0126, and which will be published in the CUSTOMS BULLETIN as a C.S.D., the Customs Service noted that, by its very terms, the provisions of section 22.20a of the Customs Regulations applied to claims made under the manufacturing drawback law 19 U.S.C. 1313 (a) and (b). At the time of the ruling, same condition drawback had existed for about three months, and no reason had been presented to warrant amendment of section 22.20a to expand the accelerated payment program.

The accelerated payment program was established to alleviate cash-flow problems associated with the liquidation of recurring, similar drawback claims. 37 FR 20951. Unlike rejected merchandise drawback under 19 U.S.C. 1313(c), and similar to manufacturing drawback 19 U.S.C. 1313 (a) and (b), same condition drawback is designed to stimulate claims for drawback on a recurring basis. This is evident from the Congressional expressions of intent contained in H. Rept. 96-1109, 17 (1980) and S. Rept. 96-999, 23 (1980). Same condition drawback was to supplement the procedures provided by the laws on temporary importations under bond, Customs bonded warehouses, and foreign-

trade zones. The underlying intent of both manufacturing drawback and same condition drawback is to encourage United States business in export trade. That intent is accomplished in both instances by allowing a refund of duty if dutiable foreign merchandise is exported within specified time periods after importation.

In view of the similarities in processing claims under 19 U.S.C. 1313 (a) and (b) and 19 U.S.C. 1313(j) and the underlying purpose of those provisions, the Customs Service is persuaded that claimants of same condition drawback should be allowed to participate in an accelerated payment program. In order to expedite granting of this benefit the procedures set forth in section 22.20a will be used where possible. Any requirement in that section which is applicable to a claim under manufacturing drawback or same condition drawback is to be used. Requirements in section 22.20a which have relevance to claims for manufacturing drawback only are to be disregarded in processing same condition drawback claims. For example, the requirement that an applicant for accelerated payment secure its performance by posting an appropriate bond or bond rider is applicable to both types of drawback, as is the requirement for proving timely exportation. The requirement for proving that a manufacture or processing occurred applies only to a claim for manufacturing drawback. Further, if the Regional Commissioner of Customs determines that a claimant is delinquent or otherwise remiss in any transaction with Customs, the claimant is not eligible for accelerated payment of drawback.

Before accelerated payment for same condition drawback is approved, a claimant must satisfy the Regional Commissioner of Customs that the claimant's recordkeeping procedures will show that (1) the identity of the imported merchandise will be maintained on any merchandise which forms the basis of the claim, (2) any use of the merchandise will be recorded (for example, the recordkeeping procedures must be designed to record any movement of the merchandise in or out of storage), (3) any change in condition in the merchandise will be recorded, (4) the dates of importation, entry, and exportation of the merchandise will be recorded, and (5) the importer—exporter will satisfy the examination requirements of the importing and exporting Regions.

Unlike the situation in manufacturing drawback claims, there is no manufacturer's statement under claims for same condition drawback. In order to apply for accelerated payment under same condition drawback, a claimant must satisfy the Regional Commissioner of Customs that the claimant's recordkeeping procedures will meet the above five listed requirements. The Regional Commissioner will approve or deny the application for eligibility for accelerated payment of same condition drawback after reviewing the claimant's

recordkeeping procedures. Until approval of the recordkeeping procedures is given, no claim for accelerated payment of same condition drawback can be accepted for processing in accordance with the procedure set forth in section 22.20a. With respect to each drawback claim thereafter, the Regional Commissioner of Customs must determine whether a claimant is delinquent or otherwise remiss in any transaction with Customs before approving that claim.

This procedure is to be applied to applications for permission to participate in the accelerated payment program for same condition drawback filed after the date of publication of this notice in the CUSTOMS BULLETIN.

(DRA-1)
Dated: September 4, 1981.

GEORGE C. STEUART
(For Marilyn G. Morrison, Director
Carriers, Drawback and Bonds Division).

(19 CFR Parts 18 and 112)

(T.D. 81-243)

CARRIERS, CARTMEN, LIGHTERMEN; CUSTOMS REGULATIONS AMENDMENTS RELATING TO THE CARRIAGE OF BONDED MERCHANDISE BY PRIVATE CARRIERS

AGENCY: U.S. Customs Service, Department of the Treasury.

ACTION: Final rule.

SUMMARY: This document amends the Customs Regulations to simplify the requirements that a private carrier must meet to be designated as a carrier of bonded merchandise. The amendment provides that a private carrier may be designated as a carrier of bonded merchandise if (1) the merchandise (including containerized merchandise) to be transported is the property of the private carrier, and (2) the private carrier files a proper Customs bond. Conforming amendments are also set forth.

EFFECTIVE DATE: October 14, 1981.

FOR FURTHER INFORMATION CONTACT: Legal Aspects: Donald F. Beach, Carriers, Drawback and Bonds Division (202-566-5856), Operational Aspects: Bradley Lund, Inspection and Control Division (202-566-5354), U.S. Customs Service, 1301 Constitution Avenue, NW., Washington, D.C. 20229.

SUPPLEMENTARY INFORMATION:

BACKGROUND

On October 27, 1980, a notice of proposed rulemaking was published in the Federal Register (45 FR 70907), requesting comments from the public concerning proposed Customs Regulations amendments to simplify Customs requirements which a private carrier must meet to be designated as a carrier of bonded merchandise.

Section 551, Tariff Act of 1930, as amended (19 U.S.C. 1551), provides that in the discretion of the Secretary of the Treasury, a private carrier, upon application, may be designated as a carrier of bonded merchandise, subject to such regulations and, in the case of each applicant, to such special terms and conditions, as the Secretary may prescribe to safeguard the revenue of the United States with respect to the transportation of bonded merchandise by the applicant.

Section 112.11(a)(4), Customs Regulations (19 CFR 112.11(a)(4)), provides that district directors of Customs may authorize a private carrier to receive and transport imported merchandise in bond if:

(i) The private carrier is the proprietor of a Customs bonded warehouse or bonded container station;

(ii) The merchandise (including containerized merchandise) to be transported is his property, having been imported by him or purchased from another importer; and

(iii) The merchandise is to be transported:

(A) From the port of importation, or port where entered for warehouse, to the private carrier's Customs bonded warehouse or bonded container station for physical deposit;

(B) From the private carrier's Customs bonded warehouse or bonded container station to another Customs bonded warehouse for physical deposit; or

(C) If for exportation, from the private carrier's Customs bonded warehouse or bonded container station to a Customs bonded warehouse at the port of exportation.

Customs believes that the present requirements in section 112.11 (a)(4), which must be met by an applicant before being designated as a private carrier of bonded merchandise, are needlessly restrictive. The goal of these requirements, as set forth in 19 U.S.C. 1551, is to safeguard the revenue. Requiring a private carrier to be a proprietor of a Customs bonded warehouse or bonded container station and restricting a private carrier to transporting merchandise to or from the private carrier's bonded warehouse or bonded container station are not necessary to accomplish this goal, and severely limit the number of carriers able to qualify as carriers of bonded merchandise. The

carrier's bond and security requirements concerning container stations in sections 19.40–19.49, Customs Regulations (19 CFR 19.40–19.49), are considered adequate to protect the revenue if the private carrier is restricted to carrying property which it owns.

Accordingly, the notice proposed to amend section 112.11(a)(4) by deleting the requirements in subparagraphs (i) and (iii), and by providing that a private carrier may be designated as a carrier of bonded merchandise if (1) the merchandise (including containerized merchandise) to be transported is the property of the private carrier (present subparagraph (ii)), and (2) the private carrier files Customs Form 3588, "PRIVATE CARRIER'S BOND."

The deletion of the requirements in subparagraphs (i) and (iii) will allow a private carrier's vehicles, which now return empty to company locations after delivering merchandise at ports of export, to load imported merchandise for shipment under the bond for exportation or transportation or for transportation and exportation (Customs Forms 7557, 7559). Private carriers also will be able to deliver their bonded merchandise by the most direct route.

On the basis of the requirement in present section 112.11(a)(4) that a private carrier must be the proprietor of a Customs bonded warehouse or bonded container station to be designated as a carrier of bonded merchandise, section 112.12(b)(3), Customs Regulations (19 CFR 112.12(b)(3)), provides that if a private carrier is the proprietor of Customs bonded warehouses in two or more Customs districts to which imported merchandise will be transported, he shall file Customs Form 3588, "PRIVATE CARRIER'S BOND," with the district director for one of the districts, accompanied by a statement showing the location of each warehouse and an additional copy of the bond for each additional district.

Accordingly, it was proposed to amend section 112.12(b)(3) to conform to the amendment of section 112.11(a)(4) which would delete the requirement that a private carrier must be the proprietor of a Customs bonded warehouse or bonded container station to be designated as a carrier of bonded merchandise. Section 112.12(b)(3) would be amended to provide that the private carrier shall file Customs Form 3588 with the district director in the district where the private carrier intends to operate. If the private carrier intends to operate in two or more districts, he shall file the bond with the district director for one of the districts, send a copy of the bond to the district director for each additional district, and include with the bond and copies of the bond a list of all districts in which he intends to operate. If the private carrier is the proprietor of one or more Customs bonded warehouses or bonded container stations to which imported merchandise will be transported, he shall accompany the bond and copies

of the bond by a statement showing the location of each warehouse and container station.

The notice also proposed to amend section 18.2(e), Customs Regulations (19 CFR 18.2(e)), to conform to the proposed amendment to section 112.11(a)(4). Presently, section 18.2(e) provides that an entry for immediate transportation in bond by a private carrier shall be accompanied by a commercial invoice setting forth the particulars of the merchandise and a statement verified by the district director of the district in which the private carrier's warehouse is located requesting permission to transport the merchandise to the private carrier's warehouse. Section 18.2(e) also sets forth a sample statement whereby the warehouse proprietor and carrier requests the permission of the district director to transport the merchandise described in the invoice from the port to his warehouse.

DISCUSSION OF COMMENTS

The three comments received in response to the notice were, in general, in favor of relaxing the restrictions on private carriers. Two commenters recommended expanding the proposed relaxation of restrictions.

Specifically, both commenters were of the opinion that section 18.2(e) should be amended or deleted in its entirety because it imposes unnecessary costs and delays on private carriers who are bonded to carry their own merchandise. For example, one of the commenters indicated that because of the different billing systems used by foreign vendors, the commercial invoice is not always available at the time the shipment is placed in bond. In fact, some commercial invoices are not available for several days or even weeks after the shipment is placed in bond. The commenter expressed the view that to require a shipment to remain on the pier until a commercial invoice is available would result in unnecessary detention expense and also subject the shipment to potential general order storage (pursuant to section 4.37, Customs Regulations (19 CFR 4.37)), if the shipment is not entered within five days of the date of entry of the vessel on which the shipment arrived.

In addition, one of the commenters expressed the view that the request in the verified statement under section 18.2(e) for "permission to transport" from the district director of the district to which the merchandise will be carried would deter private carriers from carrying bonded merchandise. For example, because many shipments arrive at ports without advance notice, the coordination of these requests for permission from the district director and the dispatching of trucks for pick-up would be nearly impossible, and would cause, in many instances, several days delay to the private carrier. As a

result, possible detention charges and loss of time to the carrier could cause a private carrier to forego the benefits of private carriage.

Customs agrees with the views expressed by the commenters regarding section 18.2(e), and is of the opinion that the private carrier's bond adequately protects the revenue and that requiring the carrier to furnish a verified statement accompanied by a commercial invoice is unnecessary. Accordingly, section 18.2(e) has been deleted.

Also, one of the commenters asked whether a private carrier will be required to obtain a bond for transportation and exportation (Customs Form 7559), if the carrier intends to ship merchandise for both transportation and subsequent exportation, as well as the private carrier's bond (Customs Form 3588). In addition, another, commenter questioned the necessity of filing a private carrier's bond pursuant to section 112.12(b)(3), with the district director in one district and a copy of the bond (with a list of all Customs districts in which the carrier intends to operate) with each district director in the districts in which the carrier intends to operate. The commenter believes that this requirement is being maintained by Customs so that each district in which the private carrier operates will know that the carrier is properly bonded. Because many private carriers operate nationwide, the commenter feels that large scale mailing could be avoided by simply adding the private carriers to the list of bonded common carriers and verifying in the same manner as common carrier bonds are verified.

In response to the first question, it is Customs position that a private carrier must obtain a bond for transportation and exportation shipments (Customs Form 7559) in addition to the private carrier's bond (Customs Form 3588), inasmuch as the private carrier's bond does not presently cover transportation and exportation movements. It should be noted that the private carrier's bond, like the common carrier's bond, does cover immediate transportation bond shipments. With respect to the inquiry concerning section 112.12(b)(3), Customs Headquarters is currently exploring the possibility of adding bonded private carriers to the list of bonded common carriers, thereby enabling Customs to verify private carrier bonds in the same manner as common carrier bonds. Presently, holders of common carrier bonds are published in the CUSTOMS BULLETIN and are ordinarily verified by Customs districts using the CUSTOMS BULLETIN or the Automated Bond Information System ("ABIS"). Until such time as Customs has developed a cost-effective and feasible method for adding existing as well as future holders of private carrier bonds to the list of holders of common carrier bonds, the present requirements under section 112.12 (b)(3) must be maintained.

In view of the comments received in response to the notice, Customs

352-989 0 - 81 - 3

is adopting the amendments as proposed, with the exception of the proposed amendment to section 18.2(e). Section 18.2(e) is deleted.

It should be noted that the above amendments do not affect Customs requirements relating to the transportation of merchandise in bond by bonded common carriers, contract carriers, or freight forwarders.

EXECUTIVE ORDER 12291

Because this will not result in a "major" rule as defined by section 1(b) of E.O. 12291, the regulatory impact analysis and review prescribed by section 3 of the E.O. is not required.

INAPPLICABILITY OF REGULATORY FLEXIBILITY ACT

This document is not subject to the provisions of 5 U.S.C. 603 and 604 (as added by section 3 of Pub. L. 96-354, the "Regulatory Flexibility Act"), because it was the subject of a notice published in the Federal Register before January 1, 1981, the effective date of the Act.

DRAFTING INFORMATION

The principal author of this document was Robert J. Pisani, Regulations Control Branch, Office of Regulations and Rulings, U.S. Customs Service. However, personnel from other Customs offices participated in its development.

AMENDMENTS TO THE REGULATIONS

Parts 18 and 112, Customs Regulations (19 CFR Parts 18, 112), are amended as set forth below.

WILLIAM T. ARCHEY,
Acting Commissioner of Customs.

Approved: August 31, 1981.

JOHN P. SIMPSON,
Acting Assistant Secretary of the Treasury.

PART 18—TRANSPORTATION IN BOND AND MERCHANDISE IN TRANSIT

In section 18.2, paragraph (e) is removed.

* * * * * * *

(R.S. 251, as amended, sections 551, 565, 624, 46 Stat. 742, as amended, 747, as amended, 759 (19 U.S.C. 66, 1551, 1565, 1624))

PART 112—CARRIERS, CARTMEN, AND LIGHTERMEN

1. Section 112.11(a)(4), Customs Regulations (19 CFR 112.11(a)(4)), is amended to read as follows:

§ 112.11 CARRIERS WHICH MAY BE AUTHORIZED.

(a) *From port to port in the United States.* The district director may authorize the following types of carriers to receive merchandise for transportation in bond from one port to another in the United States upon compliance with the provisions of this subpart:

* * * * * * *

(4) Private carriers, if:

(i) The merchandise (including containerized merchandise) to be transported is the property of the private carrier; and (ii) the private carrier files Customs Form 3588, "Private Carriers Bond".

2. Section 112.12(b)(3), Customs Regulations (19 CFR 112.12 (b)(3)), is amended to read as follows:

§ 112.12 APPLICATION FOR AUTHORIZATION.

* * * * * * *

(b) *Special requirements.* In addition to the requirements in paragraph (a) of this section, the specified carriers shall also file with the district director the following documents:

* * * * * * *

(3) *Private carriers.* The private carrier shall file the bond with the district director in the Customs district where the private carrier intends to operate. If the private carrier intends to operate in two or more Customs districts, he shall file the bond with the district director for one of the districts, send a copy of the bond to the district director for each additional district, and include with the bond and copies of the bond a list of all Customs districts in which he intends to operate. If the private carrier is the proprietor of one or more Customs bonded warehouses or bonded container stations to which imported merchandise will be transported, he shall accompany the bond and copies of the bond by a statement showing the location of each warehouse and container station.

(R.S. 251, as amended, sections 551, 565, 624, 46 Stat. 742, as amended, 747, as amended, 759 (19 U.S.C. 66 1551, 1565, 1624))

[Published in the Federal Register, Sept. 14, 1981 (46 FR 45600)]

(T.D. 81-244)

Foreign Currencies—Daily Rates for Countries Not on Quarterly List

The Federal Reserve Bank of New York, pursuant to section 522(c), Tariff Act of 1930, as amended (31 U.S.C. 372(c)), has certified buying rates for the dates and foreign currencies shown below.

The rates of exchange, based on these buying rates, are published for the information and use of Customs officers and others concerned pursuant to Part 159, Subpart C, Customs Regulations (19 CFR 159, Subpart C).

Argentina peso:	
August 24–28, 1981	$0.000194
Chile peso:	
August 24–28, 1981	$0.025575
Colombia peso:	
August 24–27, 1981	$0.018018
August 28, 1981	.017963
Greece drachma:	
August 24, 1981	$0.016681
August 25, 1981	.016340
August 26, 1981	.016434
August 27, 1981	.016488
August 28, 1981	.016502
Indonesia rupiah:	
August 24–28, 1981	$0.001582
Israel shekel:	
August 24, 1981	$0.079114
August 25, 1981	.079365
August 26, 1981	.079114
August 27, 1981	.079051
August 28, 1981	.078064
Peru sol:	
August 24–28, 1981	$0.002287
South Korea won:	
August 24–28, 1981	$0.001454

(LIQ-03-01 O:C:E)

Dated: August 31, 1981.

KENNETH A. RICH,
Acting Chief,
Customs Information Exchange

(T.D. 81-245)

Foreign Currencies—Variances From Quarterly Rate

The following rates of exchange are based upon rates certified to the Secretary of the Treasury by the Federal Reserve Bank of New York, pursuant to Section 522(C), Tariff Act of 1930, as amended (31 U.S.C. 372(c)), and reflect variances of 5 per centum or more from

the quarterly rate published in Treasury Decision 81-183 for the following countries. Therefore, as to entries covering merchandise exported on the dates listed, whenever it is necessary for Customs purposes to convert such currency into currency of the United States, conversion shall be at the following rates.

Brazil cruzeiro:	
August 24–25, 1981	$0.009902
August 26–28, 1981	.009738
Hong Kong dollar:	
August 24, 1981	$0.168719
August 25, 1981	.167364
August 26, 1981	.168152
August 27, 1981	.168011
August 28, 1981	.168606
Republic of South Africa rand:	
August 24, 1981	$1.0630
August 25, 1981	1.0543
August 26, 1981	1.0580
August 27, 1981	1.0590
August 28, 1981	1.0580
Thailand baht (tical):	
August 24–28, 1981	$0.043384

(LIQ-03-01 O:C:E)

Dated: August 31, 1981.

KENNETH A. RICH,
Acting Chief,
Customs Information Exchange.

U.S. Customs Service

Proposed Rulemaking

(19 CFR Part 162)

INSPECTION, SEARCH, AND SEIZURE OF VESSELS BY CUSTOMS OFFICERS

AGENCY: U.S. Customs Service, Department of the Treasury.

ACTION: Proposed rule.

SUMMARY: This document proposes to amend the Customs Regulations relating to the boarding and search of vessels to: (1) permit Customs officers to board American vessels on the high seas for the purpose of examining the manifest and other documents and papers and examining, inspecting, and searching these vessels without first making a determination that there is probable cause to believe that such vessels are violating or have violated the laws of the United States; and (2) provide that Customs officers are authorized to assist any other agency in the enforcement of United States law on any vessel.

The proposed changes are designed to remove a potentially unnecessary barrier to the effective enforcement of customs and navigation laws consistent with constitutional and statutory principles.

DATE: Comments must be received on or before (60 days from the date of publication in the Federal Register).

ADDRESS: Written comments (preferably in triplicate) should be addressed to the Commissioner of Customs, Attention: Regulations and Information Division, Room 2426, 1301 Constitution Avenue, NW., Washington D.C. 20229.

FOR FURTHER INFORMATION CONTACT: Dennis Cronin, Office of the Chief Counsel, U.S. Customs Service, 1301 Constitution Avenue, NW., Washington D.C. 20229 (202–566–5476).

SUPPLEMENTARY INFORMATION:

BACKGROUND

Section 162.3(a), Customs Regulations (19 CFR 162.3(a)), states in part that a Customs officer, for the purposes of examining the manifest and other documents and papers and examining, inspecting, and searching the vessel, may at any time go on board:

(1) Any vessel at any place in the United States or within the Customs waters of the United States;

(2) Any American vessel on the high seas, when there is probable cause to believe that such vessel is violating or has violated the laws of the United States.

The statutory authority for this regulation is section 581(a), Tariff Act of 1930, as amended (19 U.S.C. 1581(a)). However, recent judicial decisions, *United States* v. *Dominguez*, 604 F. 2d 304 (4th Cir. 1979), and *Untied States* v. *Warren*, 578 F. 2d 1058 (5th Cir. 1978) (*en banc*), *rev'g*, 550 F. 2d 219 (5th Cir. 1977), regarding 14 U.S.C. 89, which is substantially similar to 19 U.S.C. 1581(a), conclude that 14 U.S.C. 89 authorizes Coast Guard officers to board American vessels on the high seas without probable cause. These decisions, coupled with the absence of any constitutional or statutory requirement that probable cause be present before Customs officers board American vessels on the high seas, warrant the removal of the probable cause requirement from section 162.3.

Further, Customs frequently is called upon to assist other agencies in the enforcement of United States law upon vessels. In many instances, the statutes authorizing these agencies to seek assistance are similar to 14 U.S.C. 141(b), which states that "The Coast Guard, with the consent of the head of the agency concerned, may avail itself of such officers and employees, advice, information, and facilities of any Federal agency * * * as may be helpful in the performance of its duties."

Customs has determined that it would be advantageous to provide standing authority for Customs officers to assist officers of other agencies in enforcing the laws of the United States on any vessel instead of requiring the consent of the Commissioner of Customs on a case-by-case basis.

The present situation of massive smuggling of contraband by vessel and the need for swift and effective law enforcement response convinces Customs that it must not restrict its lawful authority to enforce the law with respect to American vessels on the high seas.

COMMENTS

Before adopting this proposal, consideration will be given to any written comments timely submitted to the Commissioner of Customs.

Comments submitted will be available for public inspection in accordance with section 103.8(b), Customs Regulations (19 CFR 103.8(b)), on regular business days between the hours of 9:00 a.m. and 4:30 p.m. at the Regulations and Information Division, Room 2426, Headquarters, U.S. Customs Service, 1301 Constitution Avenue NW., Washington D.C. 20229.

INAPPLICABILITY OF REGULATORY FLEXIBILITY ACT

Because the proposed changes are enforcement measures, the amendment is not expected to; have significant secondary or incidental effects on a substantial number of small entities; impose, or otherwise cause, a significant increase in the reporting, recordkeeping, or other compliance burdens on a substantial number of small entities; or generate significant interest or attention from small entities through comments, either formal or informal.

Accordingly, the proposed amendment does not require a regulatory flexibility analysis under the provisions of Pub. L. 96–354, the "Regulatory Flexibility Act" (5 U.S.C. 601, *et seq.*).

AUTHORITY

These changes are proposed under the authority of R.S. 251, as amended, secs. 455, 581, 46 Stat. 716, as amended, 747, as amended; 19 U.S.C. 1455, 1581.

DRAFTING INFORMATION

The principal author of this document was Robert J. Pisani, Regulations and Information Division, Office of Regulations and Rulings, U.S. Customs Service. However, personnel from other Customs offices participated in its development.

PROPOSED AMENDMENTS

It is proposed to amend section 162.3, Customs Regulations (19 CFR 162.3), in the following manner:

1. Section 162.3(a)(2) would be amended to read as follows:

162.3 Boarding and search of vessels.

(a) * * *

(1) * * *

(2) Any American vessel on the high seas; or

* * * * * * *

2. A new paragraph (c) would be added to section 162.3 to read as follows:

(c) *Assistance of other agencies.* Customs officers are authorized to assist any other agency in the enforcement of United States laws on any vessel.

WILLIAM T. ARCHEY,
Acting Commissioner of Customs.

Approved: August 26, 1981.

JOHN P. SIMPSON,
Acting Assistant Secretary of the Treasury.

Published in the Federal Register, Sept. 14, 1981 (46 FR 45626).

(19 CFR Part 101)

Proposed Changes in the Field Organization of the Customs Service

AGENCY: U.S. Customs Service, Department of the Treasury.

ACTION: Proposed rule.

SUMMARY: This notice proposes to change the field organization of the Customs Service as follows:

1. In the New Orleans Region, (a) establish a new Customs port of entry at Gramercy, Louisiana; and (b) revoke the designation of Gramercy, Louisiana, as a Customs station.

2. In the San Francisco Region, (a) revoke the designation of Annette Island and Tok, Alaska, as Customs stations under the jurisdiction of the Juneau, Alaska, district; (b) transfer jurisdiction of the Customs stations of Eagle, Haines, and Hyder from the Juneau to the Anchorage, Alaska, district; (c) revoke the designation of Kodiak, Pelican, Petersburg, and Sand Point, Alaska, as Customs ports of entry; and (d) designate Kodiak, Pelican, Petersburg, Barrow, Dutch Harbor, Fort Yukon, Kaktovik, Kenai, and Northway, Alaska, as Customs stations under the jurisdiction of the Anchorage, Alaska, district.

These changes are part of a continuing program to obtain more efficient use of Customs personnel, facilities, and resources, and to provide better service to carriers, importers, and the public.

DATES: Comments must be received on or before: (60 days from date of publication in the Federal Register).

ADDRESS: Written comments should be addressed to the Commissioner of Customs, Attention: Regulations Control Branch, U.S. Customs Service, 1301 Constitution Avenue, NW., Room 2426, Washington, D.C. 20229.

FOR FURTHER INFORMATION CONTACT: Richard Coleman, Office of Inspection, U.S. Customs Service, 1301 Constitution Avenue, NW., Washington, D.C. 20229 (202–566–8157).

SUPPLEMENTARY INFORMATION:

Background

GRAMERCY, LOUISIANA

Gramercy, Louisiana, is currently a very busy Customs station in the New Orleans, Louisiana, Customs region (Region V). In reviewing the application of the South Louisiana Port Commission for designation of Gramercy as a Customs port of entry, Customs has found that the workload at this station has increased significantly over the past few years and now far exceeds the established workload standards used by Customs for creating a new port of entry. The Gramercy station now handles more than 2,000 cargo vessels annually. The minimum requirement recommended in Customs workload standards is 250 cargo vessels annually.

Accordingly, to provide the most economical and efficient service to the public and to meet the expanded needs of the importing community in the Gramercy area, it is proposed to establish Gramercy, Louisiana, as a new port of entry in the New Orleans, Louisiana, Customs district.

The port limits of the proposed port of entry at Gramercy, Louisiana, would include that portion of the Parishes of St. Charles, St. John the Baptist, and St. James, lying within the area bounded on the East where the longitude line of 90°27′30″ intersects on the North at the latitude line of 30°06′ and intersects on the South at the latitude line of 29°57′, and bounded on the West where the longitude line of 90°54′ intersects on the North at the latitude line of 30°06′ and intersects on the South at the latitude line of 29°57′.

JUNEAU AND ANCHORAGE, ALASKA

As part of a general revision of the Customs Regulations, by T.D. 77–241, published in the Federal Register on October 5, 1977 (42 FR 54274), Part I of Title 19, Code of Federal Regulations (19 CFR Part I), which sets forth the general provisions relating to the operation of the Customs Service including a listing of the Customs regions, districts, ports, and stations, was replaced with a new Part 101 (19 CFR Part 101).

One of the changes set forth in T.D. 77–241 was to amend section 101.4, Customs Regulations, to indicate that Annette Island, Eagle, Haines, Hyder, and Tok, Alaska, were Customs stations in the Anchorage, Alaska, district. Even though this change, which was made to reflect the transfer of the district office from Juneau to Anchorage, was published in the Federal Register, the amendment to

section 101.4 was never made and that section still incorrectly indicates that these Customs stations are in the Juneau district. Accordingly, it is proposed to amend section 101.4 to indicate that these Customs stations are in the Anchorage district, rather than in the Juneau district.

In order to increase management effectiveness and adjust to the changing traffic patterns in Anchorage, Alaska, it is now considered desirable to abolish rather than transfer Annette Island and Tok as Customs stations. Further the abolishment of the Customs stations at Annette Island and Tok is warranted by the fact that neither station has been staffed by Customs for some time now due to lack of requests for services. To provide the most economical and efficient service to the public and to meet the expanding needs of the importing public in the Anchorage area, it is also proposed to abolish Kodiak, Pelican, Petersburg, and Sand Point as ports of entry in Anchorage, Alaska, and designate Kodiak, Pelican, and Petersburg as Customs stations in the Anchorage district. All of these areas have peak activity during the summer fishing season and little or no activity at other times. Because there is relatively little activity at these locations at other times, it is not practical or feasible that they be retained as Customs ports of entry, but rather that they be designated as Customs stations. The workload at Sand Point is so small, it would not even be practical to retain it as a Customs station.

The result of the changes in section 101.4 is to abolish two Customs stations, Annette Island and Tok, Alaska, and to designate Customs stations in the Anchorage district as follows:

District	Customs stations	Port of entry having supervision
Anchorage, Alaska	Barrow, Alaska	Fairbanks.
	Dutch Harbor, Alaska	Anchorage.
	Eagle, Alaska	Alcan.
	Fort Yukon, Alaska	Fairbanks.
	Haines, Alaska	Dalton Cache.
	Hyder, Alaska	Ketchikan.
	Kaktovik (Barter Island), Alaska	Fairbanks.
	Kenai (Nikiski,) Alaska	Anchorage.
	Kodiak, Alaska	Anchorage.
	Northway, Alaska	Alcan.
	Pelican, Alaska	Juneau.
	Petersburg, Alaska	Wrangell.

These changes will update the description of the Alaska Customs field organization in the Customs Regulations. They will also help

Customs to use its resources more effectively by abolishing Customs ports and stations which are no longer needed and by creating new stations where they are needed.

COMMENTS

Before adopting this proposal, consideration will be given to any written comments timely submitted to the Commissioner of Customs. Comments submitted will be available for public inspection in accordance with section 103.8(b), Customs Regulations (19 CFR 103.8(b)), on regular business days between the hours of 9:00 a.m. to 4:30 p.m. at the Regulations Control Branch, Room 2426, Headquarters, U.S. Customs Service, 1301 Constitution Avenue, NW., Washington D.C. 20229.

EXECUTIVE ORDER 12291

These proposed amendments do not meet the criteria for a "major" regulation as defined by section 1(b) of E.O. 12291. Accordingly, a regulatory impact analysis is not required.

REGULATORY FLEXIBILITY ACT

Pursuant to the provisions of section 605(b) of the Regulatory Flexibility Act Pub. L. 96–354, 5 U.S.C. 601, et seq.), the Secretary of the Treasury has determined that if promulgated, the regulations set forth in this document will not have a significant economic impact on a substantial number of small entities. Accordingly, these regulations are not subject to the regulatory analysis or other requirements of 5 U.S.C. 603 and 604.

Customs routinely establishes, expands, and eliminates Customs ports of entry throughout the United States to accommodate the volume of Customs-related activity in various parts of the country. Although this proposal may have a limited effect upon some small entities in the affected areas, it is not expected to be significant because the establishment of Customs ports of entry in other locations has not had a significant economic impact upon a substantial number of small entities to the extent contemplated by the Regulatory Flexibility Act.

AUTHORITY

This change is proposed under the authority vested in the President by section 1 of the Act of August 1, 1914, 38 Stat. 623, as amended (19 U.S.C. 2), and delegated to the Secretary of the Treasury by Executive Order No. 10289, September 17, 1951 (3 CFR 1949–1953 Comp., Ch. II), and pursuant to authority provided by Treasury Department Order No. 101–5 (46 FR 9536).

DRAFTING INFORMATION

The principal author of this document was Barbara E. Whiting, Regulations Control Branch, Office of Regulations and Rulings, U.S. Customs Service. However, personnel from other Customs offices participated in its development.

Dated: August 31, 1981.

JOHN P. SIMPSON,
Assistant Secretary of the Treasury.

[Published in the Federal Register, Sept. 14, 1981 (46 FR 45625)]

Recent Unpublished Customs Service Decisions

The following listing of recent administrative decisions issued by the Office of Regulations and Rulings, U.S. Customs Service, and not otherwise published, is published for the information of Customs officers and the importing community. Although the decisions are not of sufficient general interest to warrant publication as Treasury Decisions, the listing describes the issues involved and is intended to aid Customs officers and concerned members of the public in identifying matters of interest which recently have been considered by the Office of Regulations and Rulings.

A copy of any decision included in this listing, identified by its date and file number, may be obtained in a form appropriate for public distribution upon written request to the Office of Regulations and Rulings, Attention: Legal Retrieval and Dissemination Branch, Room 2404, U.S. Customs Service, 1301 Constitution Avenue, N.W., Washington, D.C. 20229. These copies will be made available at a cost to the requester of $0.10 per page. However, the Customs Service will waive this charge if the total number of pages copied is ten or less.

Decisions listed in earlier issues of the Customs Bulletin, through February 2, 1981 are available in microfiche format at a cost of $30.90 ($0.15 per sheet of fiche). It is anticipated that additions to the microfiche will be made quarterly and subscriptions are available. Requests for the microfiche now available and for subscriptions should be directed to the Legal Retrieval and Dissemination Branch. Subscribers will automatically receive updates as they are issued and will be billed accordingly.

Dated: September 8, 1981.

B. JAMES FRITZ,
Director,
Regulations Control and Disclosure Law Division.

Date of decision	File No.	Issue
7-23-81	061049	Classification: chimney liner classifiable as a paint (474.30, 798.00)
7-23-81	065566	Classification: hinges, gates, and fence components (647.03, 653.02, 657.25)
7-23-81	065600	Classification: printed brochures (270.45, 270.50, 270.85)
7-23-81	065621	Classification: plastic adhesive bandages with non-medicated pads (389.62, 495.05, 774.55)
8- 4-81	065657	Classification: men's protective leg type tie boot (application of American Selling Price)
8- 4-81	065719	Classification: men's protective leg type tie boot (application of American Selling Price)
8- 4-81	065720	Classification: men's protective leg type tie boot (application of American Selling Price)
8- 4-81	065721	Classification: men's protective leg type tie boot (application of American Selling Price)
8- 4-81	065874	Classification: men's protective leg type tie boot (application of American Selling Price)
8- 4-81	065878	Classification: men's protective leg type tie boot (application of American Selling Price)
8- 4-81	065879	Classification: men's protective leg type tie boot (application of American Selling Price)
8- 4-81	065880	Classification: men's protective leg type tie boot (application of American Selling Price)
8- 4-81	065953	Classification: men's protective leg type tie boot (application of American Selling Price)
8- 4-81	068398	Classification: protective boots (700.60)
6-30-81	068437	Classification: unfinished cab chassis for off-highway 85 ton dump truck (692.20)
8- 6-81	068548	Classification: small plastic balls (735.12, 741.25)
8- 3-81	068586	Classification: linen handbags (706.20)
7-10-81	068682	Classification: ornamented women's rear patch pocket (382.00)
6-30-81	068704	Classification: yarn (310.60)
7-15-81	068713	Classification: white chocolate not classifiable as a confectionery (183.00, 118.30, 950.11, 950.19)
8- 6-81	068933	Classification: acrylic gloves of Chinese origin which are sent to the Philippines for application of a leather applique are products of China for tariff classification purposes (207 U.S. 556, 1907)
7-13-81	800874	Classification: woman's woven cotton blouse (382.00)
7-20-81	800891	Classification: painting on silk-polyester material; painting on dried leaves with fiber board backing, both hand-painted (389.30, 389.62, 765.03)
7-13-81	800899	Classification: fabrics and paper (254.85, 345.50, 355.82)
7-17-81	800916	Classification: women's open toe, open back casual shoe (700.51, 700.52, 700.53, 700.56, 700.57, 700.59)
7-13-81	800917	Classification: hot pads (366.79)
7-13-81	800927	Classification: in-house computer system (676.55)

Date of decision	File No.	Issue
7-17-81	800928	Classification: women's shirt (382.06)
7-16-81	800929	Classification: wooden box (204.25)
7-13-81	800932	Classification: monorail trolley (664.10)
7-16-81	800933	Classification: plastic shells containing air freshening and odor absorbing chemicals (772.15)
7-13-81	800940	Classification: coal shiploader (653.00)
7-22-81	800946	Classification: men's knit baseball shirt (380.57, 380.61)
7-13-81	800952	Classification: men's woven shirt (380.84)
7-17-81	800955	Classification: bleached cotton shoddy (300.45, 300.50)
7-13-81	800956	Classification: men's woven cotton denim jeans (380.39)
7-22-81	800957	Classification: plastic sheet made from fibrillated film (744.55)
7-16-81	800962	Classification: pin cushion surrounded with six small china dolls (386.04, 386.09)
7-13-81	800965	Classification: ammonium thiglycolate (425.52)
7-16-81	800974	Classification: ice fishing shelter (731.70)
7-22-81	800977	Classification: children's talking typewriter (676.05)
7-22-81	801002	Classification: remote control model vehicles and separate hand-held transmitters (685.60, 737.15)
7-22-81	801008	Classification: sheet laminating machine (668.02)
8-20-81	105279	Vessels: 46 U.S.C. 289 is intended to protect the coastwise and domestic shipping industry for U.S. ships and can only be modified by legislation or waived in the interest of national defense

United States Court of International Trade

One Federal Plaza
New York, N.Y. 10007

Chief Judge

Edward D. Re

Judges

Paul P. Rao
Morgan Ford
Scovel Richardson
Frederick Landis
James L. Watson
Herbert N. Maletz
Bernard Newman
Nils A. Boe

Senior Judge

Samuel M. Rosenstein

Clerk

Joseph E. Lombardi

Decisions of the United States Court of International Trade

(Slip Op. 81-76)

REVEREND LESLIE LEE DEAN, PETITIONER

v.

UNITED STATES, RESPONDENT

Court No. 81-5-00668

ORDER

(Dated August 26, 1981)

RE, *Chief Judge:* Upon application by the petitioner on June 15, 1981 and upon the representations contained therein, it is hereby

ORDERED that said application to proceed *in forma pauperis* is granted, and pursuant to section 1915(a) of Title 28, United States Code, the petitioner shall be allowed to proceed without the payment of fees, costs or security therefor; and it is further

ORDERED that, pursuant to section 1915(d) of Title 28, United States Code, Herbert E. Harris II, Esq. and Brian E. McGill, Esq. of the firm Harris, Berg and Creskoff, are hereby appointed to serve without fee and to appear generally for the petitioner, as his attorney and counsellor at law, through all proceedings in this case, unless sooner relieved by order of Court.

(Slip Op. 81–77)

DENNIS P. VANDERLIND, SR., AND UAW LOCAL 548, PLAINTIFFS

v.

UNITED STATES, DEFENDANT

Court No. 81–7–00858

ORDER

(Dated August 26, 1981)

RE, *Chief Judge:* Upon motion by defendant, submitted without objection by plaintiffs, to suspend proceedings in the above-entitled action pending the United States Department of Labor's administrative reconsideration of plaintiffs' petition for certification of eligibility, for adjustment assistance under section 223 of the Trade Act of 1974 upon all other papers and proceedings herein, and for good cause shown, it is hereby

ORDERED that all further proceedings in the above-entitled action are stayed pending a new determination by the United States Department of Labor in its administrative reconsideration of plaintiffs' petition for certification of eligibility for adjustment assistance under section 223 of the Trade Act of 1974, and for a period not to exceed thirty (30) days from the date of issuance of such new determination by the Department of Labor; and it is further

ORDERED that defendant through its counsel shall file with the Court by no later than Tuesday, September 1, 1981, a copy of any letter or other written transmission informing plaintiffs or their counsel of the Department of Labor's decision to administratively reconsider plaintiffs' petition and a copy of any Federal Register notice published containing the substance of the Department of Labor's decision to administratively reconsider plaintiffs' petition; and it is further

ORDERED that defendant through its counsel shall file with the

Court and serve a copy thereof upon plaintiffs' counsel by no later than Tuesday, September 1, 1981, a letter informing the Court of the approximate date of the conclusion of such reconsideration by the Department of Labor; and it is further

ORDERED that defendant through its counsel shall advise the Court of the new determination by the Department of Labor regarding plaintiffs' petition no later than ten (10) days after the date of issuance of that determination.

(Slip Op. 81–78)

GENERAL ELECTRIC COMPANY, PLAINTIFF *v.* UNITED STATES, DEFENDANT

Court No. 75–1–00274

[Judgment for defendant.]

(Decided: August 26, 1981)

Freeman, Meade, Wasserman & Schneider, Esqs. (*Bernard J. Babb* and *Louis Schneider*, Esqs. at the trial; *Bernard J. Babb* on the brief) for the plaintiff.

Stuart E. Schiffer, Acting Assistant Attorney General; *Joseph I. Liebman*, Attorney in Charge, International Trade Field Office, Commercial Litigation Branch (*Saul Davis*, Esq., at the trial and on the brief) for the defendant.

NEWMAN, *Judge:* The Court is again called upon to determine the question of what constitutes a "radio receiver" for tariff classification purposes. In this action, plaintiff contests the classification of three articles invoiced as "electronic packs" EP–14, EP–20, and PK–11A, and a fourth article invoiced as an "amplifier pack" TINIB, all of which merchandise was imported from Shannon, Ireland and entered at the port of Chicago, Illinois on May 8, 1973 (Entry No. 148889). The "electronic packs" (chassis) were assessed with duty under the provision in item 685.23, TSUS, modified by T.D. 68–9, for "Solid-state (tubeless) radio receivers" at the rate of 10.4 percentum ad valorem.[1]

Plaintiff claims:

That the chassis are merely parts of radio receivers, and therefore are properly dutiable under item 685.25, TSUS, modified by T.D.

---

[1] These imports were classified under item 685.23, TSUS, pursuant to General Interpretative Rule 10(h), TSUS, which reads: "(h) unless the context requires otherwise, a tariff description for an article covers such article, whether assembled or not assembled, *and whether finished or not finished*". (Emphasis added.)

68–9, as "Other" (than solid-state (tubeless) radio receivers), at the rate of 6 percentum ad valorem;

Alternatively, that the PK–11A is dutiable under the residual provision "Other" in item 685.50, TSUS, modified by T.D. 68–9, at the rate of 7.5 percentum ad valorem; and further that the EP–14 and EP–20 articles should have been assessed under item 688.40, TSUS, modified by T.D. 68–9, as "Electrical articles, and electrical parts of articles, not specially provided for," at the rate of 5 percentum ad valorem, or under item 678.50, TSUS, modified by T.D. 68–9, as "Machines not specially provided for, and parts thereof," at the rate of 5 percentum ad valorem.

The "amplifying packs" were assessed with duty at the rate of 7.5 percentum ad valorem under the provision in item 684.70, TSUS, modified by T.D. 68–9, for "audio-frequency electric amplifiers". Plaintiff argues that the "amplifier packs" are properly dutiable under item 685.32, TSUS, modified by T.D. 68–9, as parts of phonographs at the rate of 5.5 percentum ad valorem.

Defendant concedes that if the chassis are not unfinished radio receivers, they are parts of radio receivers and are properly classifiable under plaintiff's primary claim, viz., item 685.25, TSUS.

I

At the trial, two witnesses testified for plaintiff and one witness was called by defendant. Additionally, plaintiff submitted twelve exhibits and defendant introduced six exhibits.

The pertinent facts may be briefly summarized:

The chassis in their imported condition are not ready or capable of use by the ultimate consumer as radio receivers without further fabrication, and after importation they are combined with other components to produce various stereo component systems and phonographs. Thus, after importation, the EP–14 and EP–20 units are installed in FM/AM/FM multiplex systems containing a tape player and record changer; the PK–11A is incorporated into either an FM/AM/FM multiplex, phonograph combination or a multiplex unit with a record changer. After importation, the TINIB is installed in plaintiff's phonographs.[2]

The EP–14 and EP–20 chassis are completed by the addition of a power transformer, a "jack pack", a power cord, certain internal

[2] After importation, the EP–14 is incorporated into Model SC–3200, which is an FM/AM/FM multiplex unit with an eight track cartridge tape player and a three speed automatic record changer. The EP–20 is incorporated into Models SC–3205 and SC–7300, both of which are FM/AM/FM multiplex units with eight-track cartridge tape players and three speed automatic record changers. The PK–11A is incorporated into either Model SC–1100, which is an FM/AM/FM multiplex, phonograph combination, or Model SC–2000, which is an FM/AM/FM multiplex system with a three-speed record changer. After importation, the TINIB is incorporated into Models V–638 and V–639, which are three-speed record changers.

wiring, a cabinet (or escutcheon), knobs and a calibration scale. Also contained in the consumer product is an 8-track tape player, a record changer, and speakers.

A power transformer serves to reduce normal household current (120 volts) to current that can be utilized by the consumer product, viz., 18 volts or 6 volts. The jack pack allows the electrical connection of the 8-track tape player, record changer and speakers to the amplifier of a chassis. A power cord conducts electricity from a wall socket to the stereo system and also contains an FM antenna. Addition of the internal wiring serves to make connections from the 8-track tape player, the jack pack, the power cord, and the record player to the imported chassis. The function of the escutcheon, knobs, and calibration scale relative to radio reception allows the user to select a particular radio and radio band. The speaker provides audible tones.

To the PK–11A is assembled a power transformer, a power cord, the escutcheon, knobs and a cabinet. A record changer and cartridge are also combined with these articles to arrive at the completed consumer product, to which speakers are then added.

The only additions to the TINIB are a transformer (which is, in essence, an extra winding of the wire of the motor of the record player in which the TINIB is placed), the power cord (which is the plug of the record player), knobs and a speaker (which are essentially the knobs and speaker for the record player).

II

At the outset, we consider the correctness of the Government's classification of the chassis as unfinished radio receivers under item 685.23, TSUS, and General Interpretative Rule 10(h).

Plaintiff maintains that the chassis are not unfinished radio receivers because they are incorporated into stereo systems comprising a combination of a radio, phonograph and tape player, or a combination of a radio and phonograph, and because the chassis were missing significant and substantial parts when imported without which the imports were inoperable as radio receivers: a power transformer, a power cord and loudspeakers. Defendant, however, insists that the missing components do not preclude classification of the chassis as unfinished radio receivers since in their imported condition the chassis were capable of performing the basic functions of a "radio receiver" within the common meaning of that term. Thus, central to the dispute between the parties is a determination of the common meaning of the term "radio receiver".

The lexicographic and technical authorities cited by defendant disclose the following pertinent definitions:

1. *Cooke & Markus, Electronics & Nucleonics Dictionary* (McGraw-Hill, 1960), at 380, 387:

> *Radio Receiver:* A receiver that converts radio waves into intelligible sounds or other perceptible signals.
>
> *Receiver:* The complete equipment required for receiving modulated radio waves and converting them into original intelligence, such as into sounds or pictures, or converting to desired useful information as in a radar receiver.[3]

2. *McGraw Hill Encyclopedia of Science and Technology* (Rev. 1966 ed), at p. 256:

> *Radio Receiver:* The part of a radio communication system which abstracts the desired information from the radio frequency (rf) energy collected by the antenna. All radio receivers must perform three basic functions: selectivity, amplification, and detection.

Moreover, the *Encyclopaedia Britannica* (1970 ed.), Vol. 11, pp. 485–486, *Collier's Encyclopedia* (1978), Vol. 19, at pp. 610–611, and *Encyclopedia Americana* (1973), Vol. 23, at pp. 121gg–121hh, describe the basic components and functions of radio receivers in detail, but do not mention transformers, power cords, speakers, and cabinets, as as among the basic components of radio receivers.

It bears early emphasis that the imported chassis can perform the basic functions of a radio receiver, to-wit, selection, amplification and detection of radio frequency if they are supplied with electric current by the power transformer and the power cord; and there is no dispute that the chassis are dedicated for use as the radio receiver portion of the specified combination stereo systems. The power transformer and power cord, which were not included in the imported chassis and were added to the chassis after importation, relate merely to the electrical power required to operate the chassis (also the entire stereo system whose phonograph and tape player components were assembled in the United States to the radio), and do not relate to radio reception *per se*. Hence, while the power transformers and power cords were added to the chassis after importation, they are not basic components of the radio receiver portion of the final consumer products.

Although this Court has determined that AM/FM tuners imported with power transformers were properly classified as unfinished radio receivers under item 685.23, TSUS (*Symphonic Electronics Corp.* v. *United States*, 72 Cust. Ct. 211, C.D. 4543 (1974)) (*Symphonic I*),

---

[3] This definition is essentially the same as those contained in the *McGraw-Hill Dictionary of Scientific and Technical Terms* (1974) and in the *IEE Standard Dictionary of Electrical and Electronics Terms* (1972).

clearly it cannot be inferred from such determination that the lack of a power transformer would preclude classification of the tuners alone as radio receivers. On the contrary, citing the *Encyclopaedia Britannica*, 1970 ed., Vol. 11, pp. 485–86, this Court held in *Symphonic I* that tuner-amplifiers fall within the common meaning of the term "radio receiver".[4] Consequently, in *Symphonic I* this Court made no determination that a power transformer is a basic component of a "radio receiver" within the common meaning of that term.

In *Symphonic Electronics Corp.* v. *United States*, 77 Cust. Ct. 147, C.R.D. 76–5 (1976) (*Symphonic II*), the issue was whether a certain AM/FM/MPX stereo chassis was properly dutiable under item 685.23, TSUS. The imports in *Symphonic II* were the same in all material respects as the tuner-amplifiers that were before the Court in *Symphonic I*, wherein this Court sustained the Government's classification under item 685.23, TSUS. Thus, in both *Symphonic* cases, the imports comprised tuner-amplifiers possessing the basic components and circuitry necessary for the reception of AM, FM and FM stereo multiplex signals, and also possessed sufficient amplifying capability to operate loudspeakers. The imports in both *Symphonic* cases had no cabinet, loudspeaker, control knobs or calibrated station dial, and were designed and intended solely for incorporation into combination radio-phonographs.

In *Symphonic II*, we noted the decision of our Appellate Court in *Montgomery Ward & Co. Inc.* v. *United States*, 61 CCPA 101, C.A.D. 1131, 499 F. 2d 1283 (1974), which held that a cabinet and loudspeaker are basic parts of an electronic organ and therefore the Government's classification of the imported components (which lacked a cabinet and loudspeaker) as an electronic musical instrument under item 725.47, TSUS, was erroneous. Respecting *Montgomery Ward* this Court observed (77 Cust. Ct. 149):

> In essence, plaintiff's position is that my prior decision in *Symphonic* requires a reexamination in light of the subsequent holding of the appellate court in *Montgomery Ward* that a speaker and cabinet are essential components of an electronic organ. Defendant argues that *Montgomery Ward* is distinguishable from the facts disclosed by the incorporated record, and that the prior *Symphonic* case is *stare decisis* inasmuch as there has been no clear and convincing showing of error.

---

[4] The *Encyclopaedia Britannica*, 1970 ed., Vol. 11, pp. 485–86, cited in *Symphonic I*, states: "A 'tuner' is employed for reception of radio broadcasts. The hi-fi tuner is simply a refined version of a radio receiver, but without audio amplifier or loudspeaker * * * [W]hen a radio tuner is combined with an integrated amplifier, the resulting unit is referred to as a 'receiver'." It may also be noted that in *Symphonic I*, both plaintiff's and defendant's witnesses testified that the basic components of a "radio receiver" are a tuner and amplifier, and agreed that "radio receivers" do not necessarily include loudspeakers. Interestingly, the first radio receiver, demonstrated by Heinrich Hertz in Germany in 1887, consisted simply of an open wire loop with spheres attached to the ends to form a gap. The presence of radio waves was "detected" by observing a spark set up on the sphere gap. See *Encyclopaedia Britannica*, 1970 ed., Vol. 18, p. 1060.

> While a cabinet and loudspeaker are essential components of an *electronic organ* (*Montgomery Ward*), the issue in the instant case is whether such components are essential to a *radio receiver* within the common meaning of that term. [Emphasis in original decision.]

In *Symphonic II*, the parties' cross-motions for summary judgment were denied because there was a factual dispute concerning the essential elements of a radio receiver, as that term is commonly understood in the electronics industry; and a dispute concerning whether a stereo "chassis" or tuner-amplifier was commonly regarded and sold in the trade as a "radio receiver". Nevertheless, as respecting loudspeakers, this Court commented (77 Cust. Ct. 153):

> It is apparent from the foregoing quoted excerpts from the stenographic transcript that concerning the essential elements of a "radio receiver" as it is known in the trade, Freeland's testimony sharply conflicts with that of Mergner and Kulinyi, except possibly with respect to loudspeakers, which all three witnesses seem to agree are not essential components of a receiver *per se*. Radio receivers are of such widespread and well known use that the court may take judicial notice of the fact that they are sold both with and without loudspeakers, and that frequently speaker systems are used with receivers that are not only external to the cabinet housing the receiver, but frequently are located at remote locations from the receiver itself.

Here, plaintiff's contention that the absence of loudspeakers precludes classification of the chassis as radio receivers is without merit. The common meaning of the term "radio receiver", unlike the meaning of the term "electronic organ", does not require a loudspeaker as an integral component. Indeed, it is common knowledge that radio receivers and loudspeakers for stereo systems are advertised and sold as separate components in the consumer electronics trade.

In *Symphonic I*, the tuner-amplifiers in issue were held properly classified under item 685.23, TSUS, although imported without loudspeakers. Similarly here, I conclude that the absence of loudspeakers was not fatal to the Government's classification of the chassis under item 685.23, TSUS.

While the essentiality of the power transformer and power cord to the operation of the chassis as radio receivers cannot be denied, the lack of these components does not preclude the application of General Interpretative Rule 10(h) to item 685.23, since the chassis are substantially complete radio receivers. Whether merchandise is substantially complete "does not depend merely on the presence or absence of an essential part". *Daisy-Heddon, Div. of Victor Comptometer Corp.* v. *United States*, 66 CCPA 97, 102, C.A.D. 1228, 600 F. 2d 799 (1979). The several definitions of "radio receiver" cited by defendant disclose that the basic functions of a radio receiver are selec-

tivity, amplification and detection, all of which are performed by the chassis in their condition as imported. The power transformers and power cords have no direct relationship to those basic functions and therefore no relationship to radio reception *per se*. Thus, it is obvious that the chassis are substantially complete radio receivers.[5]

Finally, in *Daisy-Heddon* the Court of Customs and Patent Appeals ruled out the functional essentiality test in connection with General Interpretative Rule 10(h) and stated that there are five basic factors that "may" or "can" be relevant in determining whether imported merchandise missing one or more parts is substantially complete.[6] An examination of the record in this case (including plaintiff's cost analysis, exhibit 12) in light of the guidelines enumerated in *Daisy-Heddon* supports the Government's contention that the imported chassis are unfinished (substantially complete) radio receivers classifiable under item 685.23, TSUS.

III

We turn to the classification of the TINIB "amplifying packs" by Customs as audio frequency electric amplifiers under item 684.70, TSUS.

Plaintiff argues that the amplifying packs are not properly classifiable as audio frequency electric amplifiers under item 684.70 since they are incorporated into phonographs, and in their imported condition do not function until the remaining portions of the phonograph (the power transformer, the power cord and record player) are attached to it.

The *Encyclopedia Britannica* (1969 ed.), Vol. 1, pp. 830–831, states that amplifiers are utilized to "take a small signal (voltage, current or power) and produce a much larger output signal". Plainly, there is no evidence in the record which rebuts the presumption that the TINIB performs such basic function.

The obvious flaw in plaintiff's argument is that it ignores the fact that amplifiers, like the other components of the combination articles, cannot perform their intended function unless and until they are attached to the components with which they are utilized.

---

[5] If plaintiff's position in this case were carried to its logical conclusion, then any sophisticated electric appliance that is imported without its power cord (or merely its plug) would have to be classified as a "part" rather than an unfinished article since the appliance could not be used for its intended purpose. This proposition is clearly untenable, as recognized by our Appellate Court in *Daisy-Heddon*, 66 CCPA at 102.

[6] These factors are: "(1) Comparison of the number of omitted parts with the number of included parts; (2) comparison of the time and effort required to place it in its imported condition; (3) comparison of the cost of the included parts with that of the omitted parts; (4) the significance of the omitted parts to the overall functioning of the completed article; and, (5) trade customs, i.e., does the trade recognize the importation as an unfinished article or as merely a part of that article" (66 CCPA at 102). The Court further stated that not all of these factors require examination in order to determine whether the imported merchandise is substantially complete, or there may be other factors necessary for the resolution of a particular case.

In short, plaintiff has failed to meet its burden of establishing that the assigned classifications for the imported chassis and amplifying packs are erroneous.

The action is dismissed; and judgment will be entered accordingly.

International Trade Commission Notices

Investigations by the U.S. International Trade Commission

DEPARTMENT OF THE TREASURY, *September 10, 1981.*

The appended notices relating to investigations by the U.S. International Trade Commission are published for the information of Customs officers and others concerned.

WILLIAM T. ARCHEY,
Acting Commissioner of Customs.

STEEL UNITS FOR ELECTRICAL TRANSMISSION TOWERS FROM ITALY

Investigation No. 104–TAA–4

NOTICE OF CHANGE OF DATE OF PUBLIC HEARING

Notice is hereby given that the public hearing to be held in connection with United States International Trade Commission investigation No. 104–TAA–4, galvanized fabricated structural steel units for the erection of electrical transmission towers from Italy, will begin at 10 a.m., e.d.t., Friday, October 23, 1981, in the Commission's Hearing Room, U.S. International Trade Commission Building, 701 E Street, NW., Washington, D.C. A hearing date of October 7, 1981, had previously been announced in the Commission's notice of institution of the investigation as published in the Federal Register of July 15, 1981 (46 FR 36780). Requests to appear at the hearing should be filed in writing with the Secretary to the Commission not later than the close of business (5:15 p.m., e.d.t.) October 15, 1981. All persons desiring to appear at the hearing and make oral presentations must file prehearing statements and should attend a prehearing conference to be held at 10 a.m., e.d.t., on October 16, 1981, in Room 117 of the U.S. International Trade Commission Building. Prehearing statements must be filed on or before October 16, 1981.

For further information concerning the conduct of the investigation, hearing procedures, and rules of general application, consult the

Commission's Rules of Practice and Procedure, part 207, subparts A and C (19 CFR 207), and part 201, subparts A through E (19 CFR 201).

By order of the Commission.

Issued: August 31, 1981.

KENNETH R. MASON,
Secretary.

Index

U.S. Customs Service

	T.D. No.
Carriers bond	81-237
Customs Regulations:	
Carriage of bonded merchandise, part 112	81-243
Examination of merchandise, part 151	81-240
Foreign currencies:	
Daily rates, August 17-21, 1981	81-238
Daily rates, August 24-28, 1981	81-244
Variances, August 17-21, 1981	81-239
Variances, August 24-28, 1981	81-245
Same condition drawback accelerated payment	81-242
Synopses of drawback decisions	81-241

DEPARTMENT OF THE TREASURY
U.S. CUSTOMS SERVICE
WASHINGTON, D.C. 20229

OFFICIAL BUSINESS
PENALTY FOR PRIVATE USE, $300

POSTAGE AND FEES PAID
DEPARTMENT OF THE TREASURY (CUSTOMS)
(TREAS. 552)

15/39

Customs Bulletin

Regulations, Rulings, Decisions, and Notices concerning Customs and related matters

and Decisions

of the United States Court of Customs and Patent Appeals and the United States Court of International Trade

Vol. 15 SEPTEMBER 30, 1981 No. 39

NEWARK PUBLIC LIBRARY

OCT 9 1981

U. S. GOVT. PUBS.
DEPOSITORY 376

This issue contains

T.D. 81-246 Through 81-250
Proposed Rulemaking
Notice
Protest Abstracts P81/151 Through P81/153
Reap. Abstracts R81/323 Through R81/327
International Trade Commission Notices

THE DEPARTMENT OF THE TREASURY
U.S. Customs Service

T1. 11/3:

NOTICE

The abstracts, rulings, and notices which are issued weekly by the U.S. Customs Service are subject to correction for typographical or other printing errors. Users may notify the U.S. Customs Service, Logistics Management Division, Washington, D.C. 20229, of any such errors in order that corrections may be made before the bound volumes are published.

For sale by the Superintendent of Documents, U.S. Government Printing Office, Washington, D.C. 20402. Price: $2.25 (single copy domestic); $2.85 (single copy foreign). Subscription price: $85.00 a year domestic; $106.25 a year foreign.

U.S. Customs Service

Treasury Decisions

(T.D. 81-246)

BONDS

Approval and discontinuance of Carrier's Bonds, Customs Form 3587

Bonds of carriers for the transportation of bonded merchandise have been approved or discontinued as shown below. The symbol "D" indicates that the bond previously outstanding has been discontinued on the month, day, and year represented by the figures which follow. "PB" refers to a previous bond, dated as represented by figures in parentheses immediately following, which has been discontinued. If the previous bond was in the name of a different company or if the surety was different, the information is shown in a footnote at the end of the list.

Dated: September 9, 1981.

Name of principal and surety	Date of bond	Date of approval	Filed with district director/area director/amount
American Cargo Express Ltd., 4101 San Jacinto, Houston, TX; motor carrier; Old Republic Ins. Co.	June 26, 1981	July 1, 1981	Houston, TX $25,000
American Freight Corp., 969 N. 2nd St., Philadelphia, PA; motor carrier; American Employers Ins. Co.	July 17, 1981	July 31, 1981	Philadelphia, PA $25,000
Anderson Cartage Co., Inc., 4040 Holly St., Unit #10, Denver, CO; motor carrier; American States Ins. Co.	June 8, 1981	July 30, 1981	Chicago, Ill $25,000
Athens Transportation System, Inc., 755 N. Capital Ave., San Jose, CA; motor carrier; Washington International Ins. Co. (PB 1/25/79) D 8/3/81 [1]	Mar. 4, 1981	Aug. 3, 1981	San Francisco, CA $25,000
Atlantis Transportation Services Ltd., 900 Stevenson Rd., North, Oshawa, Ontario, Canada; motor carrier Fireman's Fund Ins. Co.	July 6, 1981	July 15, 1981	Buffalo, NY $25,000
Best Way Motor Freight, Inc., 1765-6th Ave., S., Seattle, WA; motor carrier; Safeco Ins. Co. of America (PB 11/27/73) D 1/2/81 [3]	Dec. 12, 1980	Jan. 2, 1981	Seattle, WA $25,000

See footnotes at end of table.

Name of principal and surety	Date of bond	Date of approval	Filed with district director/area director/amount
Chessie Motor Express, Inc., 1060 Kings Hwy., N., Cherry Hill, N.; motor carrier; American Casualty Co. of Reading, PA	June 10, 1981	Aug. 10, 1981	Philadelphia, PA $100,000
Keith Fulton & Sons, Inc., 21 Water St., Cambridge, MA; motor carrier; Peerless Ins. Co. D 8/3/81	July 27, 1976	Mar. 11, 1977	Boston, MA $25,000
General Motor Lines, Inc., 1200 S. Conkling St., Baltimore, MD; motor carrier; Ins. Co. of North America	July 20, 1981	July 24, 1981	Baltimore, MD $25,000
Great Southwest Warehouse, Inc., dba: Seattle Transfer & Storage, Seattle Tacoma International Airport, Seattle, WA; motor carrier; Gulf Ins. Co. (PB 6/20/75) D 7/17/81 [4]	May 7, 1981	July 16, 1981	Seattle, WA $25,000
Roy Greenfield Trucking, Box 747, Weatherford, TX; motor carrier; Ins. Co. of North America (PB 12/31/79) D 7/28/81	July 10, 1981	July 28, 1981	Laredo, TX $25,000
International Ex-Air Transport, Inc., 2210 Guadalupe, Laredo, TX; motor carrier; National Surety Corp.	Aug. 6, 1981	Aug. 7, 1981	Laredo, TX $25,000
Kingsway Transports Ltd., 10325 Cote de Liesse, Montreal, P.Q., Canada, and Kingsway Transports Inc., 1105 N. Market St., Wilmington, DE; motor carrier; Travelers Indemnity Co. (PB 5/13/75) D 8/7/81 [5]	July 3, 1981	Aug. 7, 1981	Ogdensburg, NY $50,000
Lyn Transport, Inc., 61 Lincoln Hwy., S. Kearny, NJ; motor carrier; Investors Ins. Co. of America (PB 7/16/76) D 7/12/81 [6]	July 7, 1981	July 12, 1981	Newark, NJ $500,000
M & H Brokerage, Inc., A State of FL Corp., 3360 NW 72nd Ave., Miami, FL motor carrier; St. Paul Fire & Marine Ins. Co. (PB 3/18/81) D 7/17/81	July 10, 1981	July 17, 1981	Miami, FL $25,000
M.T. Farms, 407 S. Main St., P.O. Box 279, Clinton, IN; motor carrier; The North River Ins. Co. (PB 9/26/73) D 7/31/81	June 25, 1981	July 31, 1981	Cleveland, OH $50,000
Mayaguez Air Cargo Service, Inc., 1805 Loiza St., Santurce, PR; motor carrier; The Home Ins. Co. (PB 2/20/73) D 6/30/81 [7]	May 18, 1981	June 30, 1981	San Juan, PR $25,000
Metro Express, Inc., 901 Arnold Ave., New Castle, DE; motor carrier; U.S. Fidelity & Guaranty Co. D 8/31/81	Sept. 17, 1975	Sept. 19, 1975	Philadelphia, PA $50,000
North State Motor Lines, Inc., P.O. Box 4108, Rocky Mount, NC; motor carrier; The Travelers Indemnity Co. (PB 2/4/75) D 8/10/81 [8]	Aug. 1, 1981	Aug. 11, 1981	Wilmington, NC $25,000
Ogden & Moffett Co., 1515 Busha Hwy, Marysville, MI; motor carrier; Continental Ins. Co. D 8/9/81	July 1, 1972	Nov. 6, 1972	Detroit, MI $50,000

See footnotes at end of table.

Name of principal and surety	Date of bond	Date of approval	Filed with district director/area director/amount
Port Carriers, Inc., 1314 East Port Rd., Jacksonville, FL; motor carrier; St. Paul Fire & Marine Ins. Co. D 7/13/81	Nov. 21, 1979	Nov. 21, 1979	Tampa, FL $25,000
Reddaway's Truck Line Inc., 1721 N.W. Northrup, Portland, OR; motor carrier; Fireman's Fund Ins. Co. (PB 10/1/80) D 7/20/81	July 16, 1981	July 20, 1981	Portland, OR $25,000
Seattle Transfer & Storage	(See Great Southwest Warehouses, Inc.)		
Trojan Freightlines Ltd., 5200 Maingate Dr., Mississauga, Ontario, Canada, motor carrier; The Continental Ins. Co.	July 30, 1981	July 31, 1981	Buffalo, NY $50,000
Western Maryland Railway Co., 100 N. Charles St., Baltimore, MD; rail carrier; American Casualty Co. of Reading, PA (PB 7/22/75) D 8/5/81 [9]	July 22, 1981	Aug. 5, 1981	Baltimore, MD $100,000

[1] Principal is Athens Transportation Service.
[2] Surety is The Travelers Indemnity Co.
[3] Surety is Fidelity & Deposit Co. of MD.
[4] Surety is Federal Ins. Co.
[5] Principal is Kingsway Transports Ltd., John N. Brocklesby Transport Ltd.; Surety is Continental Ins. Co.
[6] Surety is Peerless Ins. Co.
[7] Principal is Mayaguez Air Cargo Service; Surety is Ins. Co. of North America.
[8] Surety is Ins. Co. of North America.
[9] Surety is Federal Ins. Co.

BON-3-03

GEORGE C. STEUART,
(For Marilyn G. Morrison, Director,
Carriers, Drawback and Bonds Division.)

(T.D. 81-247)

Foreign Currencies—Daily Rates for Countries Not on Quarterly List

The Federal Reserve Bank of New York, pursuant to section 522(c), Tariff Act of 1930, as amended (31 U.S.C. 372(c)), has certified buying rates for the dates and foreign currencies shown below. The rates of exchange, based on these buying rates, are published for the information and use of Customs officers and others concerned pursuant to Part 159, Subpart C, Customs Regulations (19 CFR 159, Subpart C).

Argentina peso:
August 31–September 4, 1981 ---------- $0.000194

Chile peso:	
August 31–September 4, 1981	$0.025575
Colombia peso:	
August 31–September 4, 1981	$0.017963
Greece drachma:	
August 31, 1981	$0.016502
September 1, 1981	.016638
September 2, 1981	.016764
September 3, 1981	.016849
September 4, 1981	.016878
Indonesia rupiah:	
August 31–September 4, 1981	$0.001582
Israel shekel:	
August 31, 1981	$0.078064
September 1–2, 1981	.078431
September 3–4, 1981	.078678
Peru sol:	
August 31–September 4, 1981	$0.002287
South Korea won:	
August 31–September 4, 1981	$0.001454

(LIQ–03–01 O:C:E)

Dated: September 4, 1981.

KENNETH A. RICH,
Acting Chief,
Customs Information Exchange.

(T.D. 81–248)

Foreign Currencies—Variances From Quarterly Rate

The following rates of exchange are based upon rates certified to the Secretary of the Treasury by the Federal Reserve Bank of New York, pursuant to Section 522(C), Tariff Act of 1930, as amended (31 U.S.C. 372(c)), and reflect variances of 5 per centum or more from the quarterly rate published in Treasury Decision 81–183 for the following countries. Therefore, as to entries covering merchandise exported on the dates listed, whenever it is necessary for Customs purposes to convert such currency into currency of the United States, conversion shall be at the following rates.

Brazil cruziero:	
August 31–September 4, 1981	$0.009738

Hong Kong dollar:	
August 31, 1981	$0.168634
September 1, 1981	.167996
September 2, 1981	.168294
September 3, 1981	.168180
September 4, 1981	.168237
Republic of So. Africa rand:	
August 31, 1981	$1.0600
September 1, 1981	1.0568
September 2, 1981	1.0575
September 3, 1981	1.0577
September 4, 1981	1.0562
Thailand baht (tical):	
August 31, 1981–September 4, 1981	$0.043384

(LIQ–03–01 O:C:E)

Dated: September 4, 1981.

KENNETH A. RICH,
Acting Chief,
Customs Information Exchange.

(T.D. 81–249)

Discontinuation of Publication of Committee for the Implementation Textile Agreements (CITA) Directives That Have Already Been Published in the Federal Register

Currently the U.S. Customs Service initiates Treasury Decisions that repeat CITA directives that have already been published in the Federal Register.

The CITA directive is received by the U.S. Customs Service at about the same time that it is published in the Federal Register. By the time a covering Treasury Decision is written, printed, and distributed, the decision is untimely. Not only does this untimely distribution limit the value of the Treasury Decision to the public, but it repeats information already provided to the public.

To eliminate this redundancy, we propose to discontinue publishing CITA directives as Treasury Decisions effective November 1, 1981.

If you have any questions regarding this discontinuance, please contact Linda Mays at 202–566–8592.

RICHARD R. ROSETTIE,
Acting Director,
Duty Assessment Division.

QUO–2–CO:T:D:SO

Dated: September 15, 1981.

(T.D. 81-250)

Customs Delegation Order No. 63

Order of Commissioner of Customs establishing an order of succession of persons to act as Commissioner of Customs

By virtue of the authority vested in me by Treasury Department Order No. 129, Revision No. 2, dated April 22, 1955 (20 FR 2875), it is hereby ordered that the following officers of the U.S. Customs Service in the order of succession enumerated, shall act as Commissioner of Customs, in the event of an enemy attack or during the absence or disability of the Commissioner of Customs, or when there is a vacancy in such office:

1. The Deputy Commissioner of Customs.
2. The Assistant Commissioner (Border Operations).
3. The Assistant Commissioner (Commercial Operations).
4. Comptroller.
5. The Assistant Commissioner (Management Integrity).

By virtue of authority vested in me by said Treasury Department Order No. 129 (Revision No. 2), and Treasury Department Order No. 165, Revised (T.D. 53654; 19 FR 7241), there is hereby delegated to the Regional Commissioners of Customs, District Directors of Customs, and Port Directors of Customs, in the event of an enemy attack on the continental United States, authority to perform any function of the Commissioner of Customs which is necessary to insure continuous performance of essential functions otherwise assigned to such officers. This delegation of authority will remain in effect until notice has been received from proper authority that it has been terminated.

This order supersedes Customs Delegation Order No. 62, dated January 6, 1981 (T.D. 81-8; 46 FR 2765).

Dated: September 15, 1981.

WILLIAM VON RAAB,
Commissioners of Customs.

[Published in the Federal Register, September 21, 1981 (46 FR 46738)]

U.S. Customs Service

Proposed Rulemaking

(19 CFR Part 148)

Personal Declarations and Exemptions

Proposed Amendments to the Customs Regulations Relating to Registration of Foreign-made Tourist Articles To Be Taken Abroad

AGENCY: U.S. Customs Service, Department of the Treasury.

ACTION: Proposed rule.

SUMMARY: This document proposes to amend the Customs Regulations to reflect Customs guidelines to standardize procedures for the registration of foreign-made tourist articles to be taken abroad temporarily by United States travelers. Registration would be limited to those articles having serial numbers, or distinctive, permanently affixed markings uniquely distinguishing those articles from similar ones when they are returned to the United States. Standardized registration procedures are necessary because there have been great variations from one Customs region to another and even from one port of entry to another within the same region, as to what articles Customs would register.

DATE: Comments must be received on or before (60 days after publication in the Federal Register).

ADDRESS: Comments may be addressed to the Commissioner of Customs, Attention: Regulations Control and Disclosure Law Division, U.S. Customs Service, 1301 Constitution Avenue, NW., Room 2426, Washington, D.C. 20229.

FOR FURTHER INFORMATION CONTACT: Joseph O'Gorman, Office of Inspection, U.S. Customs Service, 1301 Constitution Avenue, NW., Washington, D.C. 20229 (202–566–8157).

SUPPLEMENTARY INFORMATION:

Background

All merchandise of foreign origin imported into the United States is subject to a customs duty unless it has been specifically exempted

352-990 O - 81 - 2

from this duty. Under section 148.1(a), Customs Regulations (19 CFR 148.1(a)), any person, except a nonresident seaman, airman, or person engaged in similar employment, who intends to take valuable effects of foreign origin abroad may register those articles before departure from the United States. The purpose of this provision is to facilitate identification of the articles upon their return to the United States so that the traveler would not have to pay duty on articles that were already subject to duty payment when originally imported.

Under section 148.1(b), before leaving the United States, the person could present valuable effects of foreign origin to a Customs officer together with a properly executed Customs Form 4457, "Certificate of Registration For Personal Effects Taken Abroad." The Customs officer would examine the articles, verify their description on the form, and sign the form. The form would be returned to the person for presentation to Customs at the port of entry upon return of the articles. A Customs Form 4455, "Certificate of Registration," could be required in any case in which a Customs Form 4457 would not adequately serve the purpose of registration.

It was Customs policy to permit the registration of any foreign-made article considered by the traveler to be "valuable." In practice, this led to great variations from one Customs region to another and even from one port of entry to another within the same region, as to what articles Customs would register. For example, at many ports, travelers were limited to registering foreign-made articles which had a serial number or other unique permanent marking. At other locations, there was no such limitation and a traveler could register a coat or a piece of jewelry and merely provide a description of the article. As a result, a Customs officer at a port where strict registration limitations were enforced had to attempt to clear travelers whose registration certificates were secured at a port with more liberal registration standards. Without a serial number or other unique permanent marking, it was often very difficult for the Customs officer at the port of entry to determine whether the article returned to the United States was the same article that previously was registered. Also, liberal registration procedures at some locations encouraged fraud. Travelers could intentionally import articles similar to those they had previously registered in an attempt to avoid the payment of duty.

The liberal registration procedures also led to occasional difficulties for travelers. Some travelers found that they were unable to register certain articles at one Customs port after previously having registered similar articles at a different port. Also, travelers who registered a non-serially-numbered article may believe erroneously that the registration process automatically precluded any doubt on the part of Customs

that the article being returned from abroad was the article previously registered. Such situations have led to misunderstandings in some instances.

To resolve these difficulties, Customs prepared new guidelines to standardize procedures for the registration of foreign-made tourist articles to be taken abroad temporarily by travelers. Customs officers were advised by internal directives to register only those foreign-made articles having serial numbers or other unique, permanently affixed markings. Customs believes it appropriate to amend the Customs Regulations to conform the regulations to the new registration standards.

This document proposes to amend section 148.1(a), Customs Regulations (19 CFR 148.1(a)), to reflect the Customs guidelines to standardize procedures for the registration of foreign-made tourist articles to be taken abroad temporarily by United States travelers. Registration would be restricted to those articles having serial numbers, or distinctive, permanently affixed markings uniquely distinguishing those articles from similar ones when they are returned to the United States. Also, the word "valuable" would be deleted from the section heading and paragraphs (a) and (b) of section 148.1, because Customs believes the term is too vague.

By separate publication, Customs intends to publicize the alternatives to registration that may be helpful to travelers taking foreign-made articles abroad. These alternatives include travelers carrying with them copies of bills of sale, insurance papers, jewelry appraisals, repair receipts, etc., that may be helpful to identify the articles upon their return. Currently, this information is found on page 11 of the Customs booklet "Know Before You Go," available from any Customs office.

AUTHORITY

These amendments are proposed under the authority of R.S. 251 as amended (19 U.S.C. 66); sections 484, 498, 624, 46 Stat. 722, as amended, 728, as amended, 759 (19 U.S.C. 1484, 1498, 1624).

COMMENTS

Before adopting this proposal, consideration will be given to any written comments (preferably in triplicate) that are submitted timely to the Commissioner of Customs. Comments submitted will be available for public inspection in accordance with section 103.8(b), Customs Regulations (19 CFR 103.8(b)), during regular business days between the hours of 9:00 a.m. and 4:30 p.m. at the Regulations Control and Disclosure Law Division, Room 2426, Headquarters,

U.S. Customs Service, 1301 Constitution Avenue NW., Washington, D.C. 20229.

Executive Order 12291

This document does not meet the criteria for a "major rule" as specified in section 1(b) of EO 12291. Accordingly, no regulatory impact analysis has been prepared.

Applicability of the Regulatory Flexibility Act

Pursuant to the provisions of section 605(b) of the Regulatory Flexibility Act (Pub. L. 96–354, 5 U.S.C. 601, *et seq.*), the Secretary of the Treasury has determined that the proposed regulations set forth in this document will not have a significant economic impact on a substantial number of small entities. Accordingly, these regulations are not subject to the regulatory analysis or other requirements of 5 U.S.C. 603 and 604. The proposed rule is a voluntary procedure, and is directed to tourists traveling abroad rather than a "small entity" as defined in section 601 of Title 5, United States Code (as added by section 3 of the Act). Therefore, the regulation will not significantly affect a substantial number of small entities, and is not expected to generate significant interest or attention from small entities through comments, either formal or informal, on the rule. Furthermore, the rule is not expected to have a significant secondary or incidental impact, or to impose, or to otherwise cause, a significant increase in the reporting, recordkeeping, or other compliance burdens on tourists.

Drafting Information

The principal author of this document was Charles D. Ressin, Regulations Control and Disclosure Law Division, U.S. Customs Service. However, personnel from other Customs offices participated in its development.

Proposed Amendments

PART 148—PERSONAL DECLARATIONS AND EXEMPTIONS

It is proposed to revise section 148.1 of Subpart A, Part 148, Customs Regulations (19 CFR 148.1) to read as follows:

SUBPART A—GENERAL PROVISIONS

148.1 Registration of effects to be taken abroad.

(a) *Persons who may use procedure.* Any person, except a nonresident seaman, airman, or person engaged in similar employment,

who intends to take effects of foreign origin abroad may register such articles before departure from the United States in order to facilitate their identification on return to the United States. Only articles of foreign origin having serial numbers or other distinctive, permanently affixed unique markings can be registered.

(b) *Procedure for registration.* Applicants for registration of articles of foreign origin shall present the articles to a Customs officer together with a properly executed Customs Form 4457. After the Customs officer has examined the articles and verified their description, he shall sign the form and return it to the applicant for presentation on return of the articles. Customs Form 4455 may be required in any case in which Customs Form 4457 will not adequately serve the purpose of registration.

(c) *Presentation on return.* The form shall be presented to the Customs officer when the registered articles are returned to the United States.

WILLIAM T. ARCHEY,
Acting Commissioner of Customs.

Approved: September 1, 1981.

JOHN P. SIMPSON,
Acting Assistant Secretary of the Treasury.

[Published in the Federal Register, September 2, 1981 (46 FR 46504)]

U.S. Customs Service

(TMK–2–CO:R:E:E)

Notice of Application for Recordation of Trade Name "BULGARI"

Application has been filed pursuant to section 133.12, Customs Regulations (19 CFR 133.12), for the recordation under section 42 of the Act of July 5, 1946, as amended (15 U.S.C. 1124), of the trade name "BULGARI" or printed with a Roman u *i.e.*, "BULGARI," used by Ditta Sotirio Bulgari di Constantino e Giorgio Bulgari S.A.S., a partnership organized under the laws of Italy, located at 10 Via dei Condotti, Rome, Italy.

The application states that the trade name is used in connection with a wide variety of fine watches, jewelry, ornamental works and artwork made of precious metal and precious or semi-precious stones and various other items made of precious metals, manufactured in Italy. The application states further that Bulgari Distribuzione S.P.A., 6 Via Gregoriana, Rome, Italy and Bulgari S.P.A., 10 Via Dei Condotti, Rome, Italy are authorized to use the trade name. Appropriate accompanying papers were submitted with the application.

Before final action is taken on the application, consideration will be given to any relevant data, views, or arguments submitted in writing by any person, in opposition to the recordation of this trade name. Any such submission should be addressed to the Commissioner of Customs, Washington, D.C. 20229, in time to be received no later than 30 days from the date of publication of this notice in the Federal Register.

Notice of the action taken on the application or recordation of this trade name will be published in the Federal Register.

Dated: September 15, 1981.

A. Piazza,
Acting Director,
Entry Procedures and Penalties Division.

[Published in the Federal Register, September 18, 1981 (46 FR 46461)]

United States Court of International Trade

One Federal Plaza
New York, N.Y. 10007

Chief Judge

Edward D. Re

Judges

Paul P. Rao
Morgan Ford
Scovel Richardson
Frederick Landis
James L. Watson
Herbert N. Maletz
Bernard Newman
Nils A. Boe

Senior Judge

Samuel M. Rosenstein

Clerk

Joseph E. Lombardi

Decisions of the United States Court of International Trade

Abstracts

Abstracted Protest Decisions

DEPARTMENT OF THE TREASURY, *September 8, 1981.*

The following abstracts of decisions of the U.S. Court of International Trade at New York are published for the information and guidance of officers of the Customs and others concerned. Although the decisions are not of sufficient general interest to print in full, the summary herein given will be of assistance to Customs officials in easily locating cases and tracing important facts.

WILLIAM VON RAAB,
Commissioner of Customs.

Decisions of the United States Court of International Trade

Abstracts

Abstracted Protest Decisions

DEPARTMENT OF THE TREASURY, *March 30, 1981.*

The following abstracts of decisions of the United States Court of International Trade at New York are published for the information and guidance of officers of the customs and others concerned. Although the decisions are not of sufficient general interest to print in full, the summary herein given will be of assistance to customs officials in easily locating cases and tracing important facts.

WILLIAM T. ARCHEY,
Acting Commissioner of Customs.

DECISION NUMBER	JUDGE & DATE OF DECISION	PLAINTIFF	COURT NO.	ASSESSED	HELD	BASIS	PORT OF ENTRY AND MERCHANDISE
				Par. or Item No. and Rate	Par. or Item No. and Rate		
P81/151	Ford, J. September 3, 1981	RMS Electronic Inc.	78-6-00975, etc.	Item 682.05 12.5% (items marked "A" and "B")	Item 682.07 6% (items marked "A") Item 685.20 5% (items	RMS Electronics, Inc. v. U.S. (C.D. 4618, aff'd C.A.D. 1249) (items marked "A" and "B")	New York Baluns, impedance matching couplers, matching transformers, model Nos. CA-2000, MA-730,

					marked "B", model CA-2600F)		ATR-375, CA-2500, CA-2100, etc. (items marked "A" and "B")
P81/152	Newman, J. September 3, 1981	A. N. Deringer, Inc., a/c Uniroyal, Inc.	78-1-00185	Item 657.20 9.5%	Item 772.65 4%	Uniroyal, Inc., c/o A. N. Deringer, Inc. v. U.S. (Abs. P80/59)	Champlain-Rouses Point (Ogdensburg) Rubber hose, pipe or tubing in various lengths with attached fittings
P81/153	Boe, J. September 3, 1981	Mostek Corporation	78-6-01417	Item 720.75 22.5%	Item 687.60 6%	U.S. v. Texas Instruments Incorporated (C.A.D. 1244)	Dallas MOS integrated circuits

Decisions of the United States Court of International Trade

Abstracts

Abstracted Reappraisement Decisions

DECISION NUMBER	JUDGE & DATE OF DECISION	PLAINTIFF	COURT NO.	BASIS OF VALUATION	HELD VALUE	BASIS	PORT OF ENTRY AND MERCHANDISE
R61/329	Watson, J. September 3, 1961	Geigy Chemical Corporation	R60/24854	United States value	U.S. selling prices, less 1% cash discount as determined by customs officer at time of appraisement; less 28.3% representing profit and general expenses usually made in U.S. on sales of dyestuffs of same class or kind; less costs of transportation and insurance from place of shipment to place of delivery in amounts determined by customs officer at time of appraisement; divid-	U.S. v. Geigy Chemical Corporation et al. (C.A.D. 1155)	New York Benzenoid dyestuffs

R81/324	Newman, J. September 3, 1981	Mitsubishi International Corporation	73-11-03033, etc.	American selling price	ed by 1.40 or such other factor applied by customs officer, to allow for customs duties payable on imported dyestuffs Appraised values less 23%, per pair	Agreed facts	statement of	Savannah Footwear
R81/325	Newman, J. September 3, 1981	Mitsubishi International Corporation	74-4-01097, etc.	American selling price	Appraised values less 23%, per pair	Agreed facts	statement of	Boston Footwear
R81/326	Boe, J. September 3, 1981	Samuel Brilliant Company	76-5-01179	American selling price	Appraised values less 20%, per pair	Agreed facts	statement of	Boston Footwear
R81/327	Boe, J. September 3, 1981	Samuel Brilliant Company	76-6-01925	American selling price	Appraised values less 20%, per pair	Agreed facts	statement of	Boston Footwear

International Trade Commission Notices

Investigations by the U.S. International Trade Commission

DEPARTMENT OF THE TREASURY, *September 17, 1981*

The appended notices relating to investigations by the U.S. International Trade Commission are published for the information of Customs officers and others concerned.

WILLIAM VON RAAB,
Commissioner of Customs.

In the Matter of CERTAIN WHEEL LOCKS AND COMPONENTS THEREOF	Investigation No. 337-TA-102

Notice of Settlement Agreement and Request for Public Comments

AGENCY: U.S. International Trade Commission.

ACTION: Request for public comments on proposed termination of investigation on the basis of a settlement agreement.

SUMMARY: Notice is hereby given that the presiding officer in this investigation has recommended that the Commission grant a joint motion by the parties to terminate the investigation on the basis of a settlement agreement executed by the complainant and the respondents. Before taking final action on the proposed termination of the investigation, the Commission requests that interested members of the public submit written comments thereon.

DATES: Comments will be considered if received within thirty (30) days of publication of this notice.

FOR FURTHER INFORMATION CONTACT: Michael P. Mabile, Esq., Office of the General Counsel, U.S. International Trade Commission, 701 E Street, NW., Washington, D.C. 20436, telephone 202-523-0350.

SUPPLEMENTARY INFORMATION: On August 7, 1981, the complainant, all respondents, and the Commission investigative attorney filed a joint motion (motion 102–4) to terminate this investigation pursuant to rule 210.51(a) of the Commission's Rules of Practice and Procedure on the basis of a settlement agreement executed by the complainant and the respondents. On August 20, 1981, the presiding officer recommended that motion 102–4 be granted, and the proposed termination of this investigation based on the settlement agreement is now before the Commission.

The substantive provisions of the settlement agreement are summarized as follows:

1. The agreement is between complainant McGard, Inc., respondents Kyo-Ei Industrial Corp., Mackin Industries, Superior Industries International, Inc., and Custom Plating Corp., and Kyo-Ei America Corp., a non-party to the investigation.

2. Complainant McGard, Inc. is the owner of all rights in U.S. Letters Patent No. 3,241,408, and all parties agree that the patent is valid.

3. Respondents and Kyo-Ei America Corp. agree that they will cease importing wheel locks of a design alleged to infringe the patent after November 15, 1981, and that they will not import or cause to be imported any wheel lock until after March 22, 1983, the date of expiration of the patent, except as provided in the agreement.

4. Between June 25, 1981, and November 15, 1981, respondents and Kyo-Ei America Corp. may sell their existing inventories of the allegedly infringing wheel locks and may import 97,510 additional sets of those wheel locks. Replacement keys for allegedly infringing wheel locks that have already been imported may be imported as necessary.

5. The parties agree that wheel locks conforming to specific new designs submitted by the respondents and Kyo-Ei America Corp. would not infringe the claims of the patent and that Kyo-Ei Industrial Corp. may manufacture, and that the other respondents and Kyo-Ei America Corp. may import, distribute and sell, wheel locks conforming to those designs.

6. For the duration of the agreement, Kyo Ei Industrial Corp. may submit drawings for different or additional wheel lock designs to McGard for approval, and such approval shall not be unreasonably withheld. If the parties cannot agree to such different or additional designs, either party may petition the Commission to reopen the investigation. The successful party to any Commission

investigation, suit at law, or other proceeding to resolve such a dispute shall be entitled to recover its attorneys fees and costs.

7. All wheel locks manufactured in Japan and imported, distributed or sold in the United States by respondents and Kyo Ei America Corp. will be clearly and conspicuously labeled as having been manufactured in Japan.

8. The parties agree that prior to March 22, 1983, the expiration date of the patent, any party may move to reopen the Commission investigation on the basis of an alleged breach of the agreement.

9. Respondents and Kyo-Ei America Corp., by signing the agreement, do not admit violation of section 337 of the Tariff Act of 1930 or any other statute or regulation.

The complete text of the settlement agreement, except for confidential business information contained therein, is available for public inspection during normal business hours (8:45 a.m. to 5:15 p.m.) at the Office of the Secretary, U.S. International Trade Commission, 701 E Street, N.W., Washington, D.C. 20436.

All comments should conform to rule 201.8 of the Commission's Rules of Practice and Procedure (19 CFR 201.8) and should be addressed to the Secretary. U.S. International Trade Commission, 701 E Street, N.W., Washington, D.C. 20436.

By order of the Commission.

Issued: September 9, 1981.

KENNETH R. MASON,
Secretary.

In the Matter of
CERTAIN STEEL ROD TREATING APPARATUS AND COMPONENTS THEREOF } Investigation No. 337–TA–97

Commission Hearing of the Presiding Officer's Recommendation and on Relief, Bonding, and the Public Interest, and the Schedule for Filing Written Submissions

AGENCY: U.S. International Trade Commission.

ACTION: The scheduling of a public hearing and written submissions in investigation No. 337–TA–97, Certain Steel Rod Treating Apparatus and Components Thereof.

Notice is hereby given that the presiding officer has issued a recommended determination that there is a violation of section 337 of the

Tariff Act of 1930, 19 U.S.C. § 1337, in the unauthorized importation into the United States and sale of a certain steel rod treating apparatus that is the subject of the Commission's investigation. Accordingly the recommended determination and the record of the hearing have been certified to the Commission for review and a Commission determination. Interested persons may obtain copies of the nonconfidential version of the presiding officer's recommendation (and all other public documents on the record of the investigation) by contacting the Office of the Secretary, U.S. International Trade Commission, 701 E Street NW., Room 161, Washington, D.C. 20436, telephone 202–523–0161.

COMMISSION HEARING: The Commission will hold a public hearing on October 14, 1981, in the Commission's Hearing Room, 701 E Street NW., Washington, D.C. 20436, beginning at 10:00 a,m. The hearing will be divided into two parts. First, the Commission will hear oral arguments on the presiding officer's recommended determination that a violation of section 337 of the Tariff Act of 1930 exists. Second, the Commission will hear presentations concerning appropriate relief, the effect that such relief would have upon the public interest, and the proper amount of the bond during the Presidential review period in the event that the Commission determines that there is a violation of section 337 and that relief should be granted. These matters will be heard on the same day in order to facilitate the completion of this investigation within time limits established under law and to minimize the burden of this hearing upon the parties.

ORAL ARGUMENTS: Any party to the Commission's investigation or any interested Government agency may present an oral argument concerning the presiding officer's recommended determination. That portion of a party's or an agency's total time allocated to oral argument may be used in any way the party or agency making argument sees fit, i.e., a portion of the time may be reserved for rebuttal or devoted to summation. The oral arguments will be held in the following order: complainant, respondents, the Commission investigative attorney, and Government agencies. Any rebuttals will be held in this order: respondents, complainant, the Commission investigative attorney, and Government agencies. Persons making oral argument are reminded that such argument must be based upon the evidentiary record certified to the Commission by the presiding officer.

ORAL PRESENTATIONS ON RELIEF, BONDING, AND THE PUBLIC INTEREST: Following the oral arguments on the presiding officer's recommendation, parties to the investigation, Government agencies, public-interest groups, and interested members of the public

may make oral presentations on the issues of relief, bonding, and the public interest. This portion of the hearing is quasi-legislative in nature; presentations need not be confined to the evidentiary record certified to the Commission by the presiding officer, and may include the testimony of witnesses. Oral presentations on relief, bonding, and the public interest will be heard from the parties and government agencies in the same order as oral arguments on the recommended determination, followed by public interest groups and interested members of the public.

If the Commission finds that a violation of section 337 has occurred, it may issue (1) an order which could result in the exclusion of the subject articles from entry into the United States and/or (2) an order which could result in one or more respondents being required to cease and desist from engaging in unfair methods of competition or unfair acts in the importation and sale of such articles. Accordingly, the Commission is interested in hearing presentations which address the form of relief, if any, which should be ordered.

If the Commission concludes that a violation of section 337 has occurred and contemplates some form of relief, it must consider the effect of that relief upon the public interest. The factors which the Commission will consider include the effect that an exclusion order and/or a cease and desist order would have upon (1) the public health and welfare, (2) competitive conditions in the U.S. economy, (3) the U.S. production of articles which are like or directly competitive with those which are the subject of the investigation, and (4) U.S. consumers.

If the Commission finds that a violation of section 337 has occurred and orders some form of relief, the President has 60 days to approve or disapprove the Commission's action. During this period, the subject articles would be entitled to enter the United States under a bond in an amount determined by the Commission and prescribed by the Secretary of the Treasury. The Commission is therefore interested in hearing presentations concerning the amount of the bond, if any, which should be imposed.

TIME LIMIT FOR ORAL ARGUMENT AND ORAL PRESENTATIONS: Parties and Government agencies will be limited to a total of 30 minutes (exclusive of time consumed by questions from the Commission or its advisory staff) for making both oral argument on violation and oral presentations on remedy, bonding, and the public interest. Persons making only oral presentations on remedy, bonding, and the public interest will be limited to 10 minutes (exclusive of time consumed by questions from the Commission and its advisory staff). The Commission may in its discretion expand the aforementioned time limits upon receipt of a timely request to do so.

WRITTEN SUBMISSIONS: In order to give greater focus to the hearing, the parties to the investigation and interested Government agencies are encouraged to file briefs on the issues of violation (to the extent they have not already briefed that issue in their written exceptions to the presiding officer's recommended determination), remedy, bonding, and the public interest. The complainant and the Commission investigative attorney are also requested to submit a proposed exclusion order and/or a proposed cease and desist order for the Commission's consideration. Persons other than the parties and Government agencies may file written submissions addressing the issues of remedy, bonding, and the public interest. Written submissions on the question of violation must be filed not later than the close of business on September 22, 1981; written submissions on the questions of remedy, bonding, and public interest must be filed not later than the close of business on September 29, 1981. During the hearing, the parties may be asked to file posthearing briefs.

Written Submissions on Motion No. 97–54, Complainant's Motion for an Accelerated Hearing Schedule and Decision Prior to the End of October 1981

In adopting the schedule set forth above, the Commission has considered Complainant's Motion for an Accelerated Hearing Schedule and Decision Prior to October 1981 (Motion No. 97–54), Respondents' Response in Opposition Thereto, and the Commission investigative attorney's submission.

Motion No. 97–54 will be held in abeyance pending a future submission from the complainant. In the event that Complainant wishes to supplement Motion No. 97–54, the Commission requests a discussion of the following:

(1) Whether there is information showing a sufficient factual likelihood that the subject apparatus or any components thereof will be imported prior to December 1981?

(2) Whether there is any other remedial measure available, including the Commission's power to issue a temporary exclusio- order pursuant to section 337(e) of the Tariff Act of 1930, U.S.C. § 1337(e) or a cease and desist order pursuant to section 337(f) of the Tariff Act of 1930, 19 U.S.C. 1337(f)?

NOTICE OF APPEARANCE: Written requests to appear at the Commission hearing must be filed with the Office of the Secretary by September 22, 1981.

ADDITIONAL INFORMATION: The original copy and 11 true copies of all briefs on violation must be filed with the Office of the

Secretary not later than September 22, 1981; the original copy and 11 true copies of all briefs on remedy, bonding and public interest must be filed with the Office of the Secretary not later than September 29, 1981. Any person desiring to discuss confidential information, or to submit a document (or a portion thereof) to the Commission in confidence, must request in camera treatment unless the information has already been granted such treatment by the presiding officer. All such requests should be directed to the Secretary of the Commission and must include a full statement of the reasons why the Commission should grant such treatment. All documents or arguments containing confidential information granted in camera treatment will be treated accordingly. All nonconfidential written submissions will be available for public inspection at the Secretary's Office.

Notice of this investigation was published in the Federal Register of January 28, 1981. 46 FR 9263.

FOR FURTHER INFORMATION CONTACT: Warren Maruyama, Esq., Office of the General Counsel, U.S. International Trade Commission, telephone 202–523–0375.

By order of the Commission.

Issued: September 2, 1981.

KENNETH R. MASON,
Secretary.

Index

U.S. Customs Service

	T.D. No.
Treasury decisions:	
Carrier bonds	81-246
Customs delegation order No. 63	81-250
Discontinuation of publication (CITA) directives	81-249
Foreign Currencies:	
Daily rates, August 31-September 4, 1981	81-247
Variances, August 31-September 4, 1981	81-248
Proposed rulemaking: Personal declarations and exemptions (19 CFR Part 148)	

DEPARTMENT OF THE TREASURY
U.S. CUSTOMS SERVICE
WASHINGTON, D.C. 20229

OFFICIAL BUSINESS
PENALTY FOR PRIVATE USE, $300

POSTAGE AND FEES PAID
DEPARTMENT OF THE TREASURY (CUSTOMS)
(TREAS. 552)

U.S.MAIL

U.S. GOVERNMENT PRINTING OFFICE : 1981

15/40

Customs Bulletin

Regulations, Rulings, Decisions, and Notices concerning Customs and related matters

and Decisions

of the United States Court of Customs and Patent Appeals and the United States Court of International Trade

Vol. 15 | OCTOBER 7, 1981 | No. 40

NEWARK PUBLIC LIBRARY

OCT 20 1981

U. S. GOVT. PUBS.
DEPOSITORY 376

This issue contains

T.D. 81-251 Through 81-254
C.A.D. 1270
Slip Op. 81-79 Through 81-81
Protest Abstracts P81/154 Through P81/155
Reap Abstracts R81/328 Through R81/342
International Trade Commission Notices

THE DEPARTMENT OF THE TREASURY
U.S. Customs Service

T1. 11/3:

NOTICE

The abstracts, rulings, and notices which are issued weekly by the U.S. Customs Service are subject to correction for typographical or other printing errors. Users may notify the U.S. Customs Service, Logistics Management Division, Washington, D.C. 20229, of any such errors in order that corrections may be made before the bound volumes are published.

For sale by the Superintendent of Documents, U.S. Government Printing Office, Washington, D.C. 20402. Price: $2.25 (single copy domestic); $2.85 (single copy foreign). Subscription price: $85.00 a year domestic; $106.25 a year foreign.

U.S. Customs Service
Treasury Decisions

(T.D. 81-251)

Bonds

Approval and discontinuance of Carrier's Bonds, Customs Form 3587

Bonds of carriers for the transportation of bonded merchandise have been approved or discontinued as shown below. The symbol "D" indicates that the bond previously outstanding has been discontinued on the month, day, and year represented by the figures which follow. "PB" refers to a previous bond, dated as represented by figures in parentheses immediately following, which has been discontinued. If the previous bond was in the name of a different company or if the surety was different, the information is shown in a footnote at the end of the list.

Dated: September 16, 1981.

Name of principal and surety	Date of bond	Date of approval	Filed with district director/area director/amount
Algus Enterprises, Inc., Lima Tire Corp., and Gilman Overseas Trader Corp., 2165 N.W. 17th Ave., Miami, FL; motor carrier; Aetna Casualty & Surety Co.	June 19, 1981	Aug. 11, 1981	Miami FL $25,000
Ashland Pipeline Co., c/o Philbin, Caralas & Co., 624 Gravier St., New Orleans, LA; pipeline; Ins. Co. of North America.	July 27, 1981	July 27, 1981	New Orleans, LA $120,000
Badger Freightways, Inc., 2720 N. 19th St., Sheboygan, MI; motor carrier; Washington International Ins. Co.	July 7, 1981	Aug. 18, 1981	Milwaukee, WI $25,000
Blalock Truck Lines, Inc., P.O. Box 734, Charleston, SC; motor carrier; United National Ins. Co. (PB 9/12/78) D 8/13/81 [1]	Aug. 6, 1981	Aug. 13, 1981	Charleston, SC $25,000
Bonney Motor Express, Inc., Rt. 460, P.O. Box 305, Windsor, VA; motor carrier; United National Ins. Co. (PB 2/16/77) D 6/25/81. [2]	May 12, 1981	July 30, 1981	Norfolk, VA $25,000

See footnotes at end of table.

Name of principal and surety	Date of bond	Date of approval	Filed with district director/area director/amount
The Cleveland, Columbus & Cincinnati Highway, Inc., 201 Stouffer Bldg., 1375 Euclid Ave., Cleveland, OH; motor carrier; Protective Ins. Co. (PB 10/30/76) D 8/13/81	Aug. 6, 1981	Aug. 18, 1981	Cleveland, OH $100,000
Delta Truck Lines (Toronto) Inc., 173 Delta St., 31 Ecker Dr., Buffalo, NY; motor carrier; Royal Globe Ins. Co. D 1/5/81	Mar. 27, 1974	Nov. 22, 1974	Buffalo, NY $25,000
Distillery Transfer Service, Inc., 1211½ N. Third St., P.O. Box H, Bardstown, KY; motor carrier; The Ohio Casualty Ins. Co. (PB 1/1/68) D 8/25/81	July 10, 1981	Aug. 25, 1981	Cleveland, OH $50,000
Foremost-McKesson, Inc., dba: Miami Crown Distributors, 1100 N.W. 23rd St., Miami, FL; motor carrier; National Fire Ins. Co. of Hartford	Sept. 1, 1981	Sept. 1, 1981	Miami, FL $25,000
Gilman Overseas Trader Corp.—See Algus Enterprises, Inc.			
Haney Truck Line, Inc., P.O. Box 485, Cornelius, OR; motor carrier; Oregon Automobile Ins. Co.	June 10, 1981	Aug. 14, 1981	Portland, OR $25,000
James F. Herlihy Trucking Co., Inc., 20 Emma St., Binghamton, NY; motor carrier; The Travelers Indemnity Co. (PB 7/24/70) D 8/26/81	Feb. 4, 1981	Aug. 26, 1981	Buffalo, NY $50,000
Hiway Transport Ltd., 900 Leeder, P.O. Box 1219, Coquitlam, BC; motor carrier; Safeco Ins. Co. of America D 10/12/81	Aug. 13, 1976	Aug. 9, 1979	Seattle, WA $25,000
Inman Freight System Inc., 321 N. Spring Ave., Cape Girardeau, MO; motor carrier; Reliance Ins. Co. D 7/10/81	Dec. 11, 1979	Dec. 11, 1979	St. Louis, MO $50,000
Interstate Heavy Hauling, Inc., 12986 N.E. Whitaker Way, P.O. Box 20536, Portland, OR; motor carrier; United Pacific Ins. Co.	Aug. 7, 1981	Aug. 7, 1981	Portland, OR $25,000
Dale Jessup, Inc., R.R. No. 1, Box 252, Camby, IN; motor carrier; American States Ins. Co. D 8/19/81	Aug. 15, 1980	Aug. 19, 1980	Cleveland, OH $50,000
Lima Tire Corp.—See Algus Enterprises, Inc.			
Matson Navigation Co., Inc., 333 Market St., San Francisco, CA; water carrier; Aetna Ins. Co. (PB 3/1/72) D 7/15/81 [1]	July 15, 1981	July 15, 1981	San Francisco, CA $50,000
Miami Crown Distributors—See Foremost McKesson, Inc.			
Mid West Motor Service Co. of Indiana, 219 Maple St., Joliet, IL; motor carrier; Old Republic Ins. Co.	Aug. 5, 1981	Aug. 11, 1981	Chicago, IL $50,000

See footnotes at end of table.

Name of principal and surety	Date of bond	Date of approval	Filed with district director/area director/amount
Nelson Freightway Inc. & Road Rail Transport Ltd., 47 East St., Rockville, CT; motor carrier; The Continental Ins. Co. (PB 4/8/69) D 8/21/81 [4]	Aug. 12, 1981	Aug. 21, 1981	Bridgeport, CT $50,000
Ohio Fast Freight, Inc., P.O.B. 808, Warren, OH; motor carrier; Peerless Ins. Co. D 8/26/81	Aug. 12, 1978	Aug. 14, 1978	Cleveland, OH $50,000
Overoad Container Service, Inc.—See Ringsby Truck Lines, Inc.			
Peninsula Shippers Association, Inc., 1907 Post Rd., Anchorage, AK; motor carrier; St. Paul Fire & Marine Ins. Co.	July 10, 1981	July 15, 1981	Anchorage, AK $25,000
Philbin, Cazalas & Co.—See Ashland Pipeline Co.			
Progressive Pier Delivery, Inc., 1 FreemanSt., Newark NJ; motor carrier; Washington International Ins. Co.	July 22, 1981	Aug. 17, 1981	New York Seaport $100,000
Ringsby Truck Lines, Inc., and Overoad Container Service, Inc., 3980 Quebec St., Denver, CO; motor carrier; Safeco Ins. Co. of America (PB 7/21/78) D 8/10/81 [5]	Aug. 10, 1981	Aug. 10, 1981	El Paso, TX $50,000
Road Rail Transport Ltd.—See Nelson Freightway Inc.			
Smith Transportation Co., 731 S. Lincoln, Santa Maria, CA; motor carrier; Hartford Accident & Indemnity Co. D 8/19/81	Sept. 18, 1980	Jan. 12, 1981	Los Angeles, CA $50,000
Victory Express, Inc., 2600 Willowburn Ave., Dayton, OH; motor carrier; St. Paul Fire & Marine Ins. Co.	July 31, 1981	Aug. 27, 1981	Cleveland, OH $50,000
Walker's Transport Ltd., P.O. Box 62, Kipp, Alberta, Canada; motor freight; Royal Ins. Co. of America D 8/7/81	Feb. 6, 1981	Apr. 14, 1981	Great Falls, MT $25,000

[1] Surety is Mid-Century Ins. Co.
[2] Surety is Reliance Ins. Co.
[3] Principal is Matson Navigation Co.; Surety is The Travelers Indemnity Co.
[4] Principal is Nelson Freightways, Inc.; Surety is Fidelity & Casualty Co. of NY.
[5] Principal is Overoad Container Service, Inc. dba: Ringsby Truck Lines, Inc. & Arizona Pacific Tank Lines; Surety is Mid-Century Ins. Co.

BON-3-03

MARILYN G. MORRISON,
Director, Carriers, Drawback and Bonds Division.

(T.D. 81-252)

Foreign Currencies—Daily Rates for Countries Not on Quarterly List

The Federal Reserve Bank of New York, pursuant to section 522(c), Tariff Act of 1930, as amended (31 U.S.C. 372(c)), has certified buying rates for the dates and foreign currencies shown below. The rates of exchange, based on these buying rates, are published for the information and use of Customs officers and others concerned pursuant to Part 159, Subpart C, Customs Regulations (19 CFR 159, Subpart C).

Argentina peso:	
September 7, 1981	Holiday
September 8, 1981	$0.000194
September 9–10, 1981	.000191
September 11, 1981	.000182
Chile peso:	
September 7, 1981	Holiday
September 8–11, 1981	$0255
Colombia peso:	
September 7, 1981	Holiday
September 8–10, 1981	$0.017963
September 11, 1981	.017915
Greece drachma:	
September 7, 1981	Holiday
September 8, 1981	$0.016920
September 9, 1981	.016764
September 10, 1981	.016920
September 11, 1981	.017007
Indonesia rupiah:	
September 7, 1981	Holiday
September 8–11, 1981	$0.001582
Israel shekel:	
September 7, 1981	Holiday
September 8–9, 1981	$0.075988
September 10–11, 1981	.075245
Peru sol:	
September 7, 1981	Holiday
September 8–11, 1981	$002287
South Korea won:	
September 7, 1981	Holiday
September 8–11, 1981	$0.001454

(LIQ-02-01 O:C:E)

Date: September 11, 1981.

KENNETH A. RICH,
Acting Chief,
Customs Information Exchange.

(T.D. 81-253)

Foreign Currencies—Variances From Quarterly Rate

The following rates of exchange are based upon rates certified to the Secretary of the Treasury by the Federal Reserve Bank of New York, pursuant to Section 522(C), Tariff Act of 1930, as amended (31 U.S.C. 372(c)), and reflect variances of 5 per centum or more from the quarterly rate published in Treasury Decision 81-183 for the following countries. Therefore, as to entries covering merchandise exported on the dates listed, whenever it is necessary for Customs purposes to convert such currency into currency of the United States, conversion shall be at the following rates.

Brazil cruziero:	
September 7, 1981	Holiday
September 8, 1981	$0.009738
September 9-11, 1981	.009557
Hong Kong dollar:	
September 7, 1981	Holiday
September 8, 1981	$0.167210
September 9, 1981	.166861
September 10, 1981	.166528
September 11, 1981	.166736
India rupee:	
September 7, 1981	Holiday
September 8, 1981	$0.109051
September 9, 1981	.108932
September 10, 1981	.109290
September 11, 1981	.109409
Republic of South Africa rand:	
September 7, 1981	Holiday
September 8, 1981	$1.0474
September 9, 1981	1.0422
September 10, 1981	1.0478
September 11, 1981	1.0500
Sri-Lanka rupee:	
September 7, 1981	Holiday
September 8-10, 1981	Quarterly
September 11, 1981	$0.050163
Thailand baht (tical):	
September 7, 1981	Holiday
September 8-11, 1981	$043384

United Kingdom pound:

September 7, 1981	Holiday
September 8, 1981	$1.7935
September 9, 1981	1.7810
September 10, 1981	1.8040
September 11, 1981	1.7790

(LIQ-03-01 O:C:E)

Dated: September 11, 1981.

KENNETH A. RICH,
Acting Chief,
Customs Information Exchange.

(T.D. 81-254)

Bonds

Approval and discontinuance of consolidated aircraft bonds (air carrier blanket bonds), Customs Form 7605

The following consolidated aircraft bonds have been approved or discontinued as shown below. The symbol "D" indicates that the bond previously outstanding has been discontinued on the month, day, and year represented by the figures which follow. "PB" refers to a previous bond, dated as represented by the figures in parentheses immediately following, which has been discontinued. If the previous bond was in the name of a different company or if the surety was different, the information is shown in a footnote at the end of the list.

Dated: September 22, 1981.

Name of principal and surety	Date term commences	Date of approval	Filed with district director/area director/amount
Sedalia-Marshall-Boonville Stage Lines, Inc., 1060 East N.W. Hgwy, Grapevine, TX; P.O. Box 61034, DFW Airport, TX; Employers Mutual Casualty Co.	Aug. 20, 1981	Sept. 4, 1981	Dallas/Fort Worth, TX $100,000

The foregoing principal has been designated as a carrier of bonded merchandise.

BON-3-01

MARILYN G. MORRISON,
Director,
Carriers, Drawback and Bonds Division.

(C.A.D. 1270)

THE UNITED STATES *v.* ARNOLD PICKLE AND OLIVE CO.

1. APPRAISEMENT—EXPORT VALUE FOR CUCUMBERS IN BRINE

Customs Court judgment holding export value for cucum ers in brine properly based on prices paid for fresh cucumbers, plus packing costs, *reversed.*

2. TARIFF DESCRIPTION—"VEGETABLES IN BRINE"

Tariff description in item 141.75 TSUS for subject goods is "vegetables in brine," not "vegetables, packed in brine." "Packed" is not term common to § 402(b) and to above description.

3. DETERMINATION OF "IMPORTED MERCHANDISE"

Valuation under § 402(b), 19 U.S.C. 1401a(b), is multi-step process, the first step being determination of what is "imported merchandise."

4. ID.—CONDITION OF MERCHANDISE

Brining permanently changes the condition of fresh vegetables, and creates goods of a physically different character.

5. ID.—GOODS IN CONDITION AS IMPORTED

"Imported merchandise" in § 402(b) means goods in condition as imported, here, cucumbers in brine, not similar goods.

6. STATUTORY STANDARD FOR "SIMILAR MERCHANDISE"

Like use of cucumbers in brine and fresh cucumbers is insufficient to satisfy statutory standard for "similar merchandise" set forth in § 402(f)(4)(C), 19 U.S.C. 1401a(f)(4)(C).

F. 2d

THE UNITED STATES, APPELLANT, *v.* ARNOLD PICKLE AND OLIVE CO., APPELLEE.

No. 8[illegible]

United Stated Court of Customs and Patent Appeals, September 17, 1981, Appeal from United States Court of International Trade, C.D. 4868.

[Reversed]

Thomas S. Martin, Acting Asst. Atty. General, *David M. Cohen*, Director, *Joseph I. Liebman*, Attorney in charge, *Sidney N. Weiss* and *John J. Mahon*, of counsel, attorneys for appellant.

Robert Glenn White, attorney for appellee.

[Oral argument on June 3, 1981 by *John J. Mahon* for appellant and *Robert Glenn White* for appellee.]

354-806 O - 81 - 2

Before MARKEY, *Chief Judge*, RICH, BALDWIN, MILLER, AND NIES, *Associate Judges*.

NIES, *Judge*.

[1] This appeal is from the judgment of the United States Customs Court (now the United States Court of International Trade), —— Cust. Ct. —— , C.D. 4868, 506 F. Supp. 647 (1980), which held that appellee had shown error in the basis used by the Government to appraise cucumbers in brine imported by appellee from Mexico and, further, had proved and "export value" [1] for the imported merchandise based on prices paid independent farmers in Mexico for fresh cucumbers plus packing costs. Costs incurred from immersion in brine during shipment were treated as part of appellee's packing cost. We reverse.

BACKGROUND

This case is the second case decided by the court below concerning the appraisement of pickle-type cucumbers [2] imported from Mexico in brine by Arnold Pickle & Olive Co. (Arnold). In the first case, *Arnold Pickle & Olive Co.* v. *United States*, 75 Cust. Ct. 154, C.D. 4620 (1975), (hereinafter referred to as *Pickle I*) seven entries of such cucumbers, imported in May 1971, were involved. In this case 100 entries, made over a seven month period in 1971, are at issue.[3]

In *Pickle I* the court held that an "export value" based on the price at which sales were make to Arnold by a Mexican company, Pickle-Mex, presumed to have been the basis for evaluating the goods used by the appraiser, was erroneous. Pickle-Mex was found to have acted as an agent or alter ego for Arnold,[4] purchasing goods for Arnold in Mexico and preparing them for shipment. Thus, despite invoices showing sales prices, the court found no bona fide sales between the two companies. The Government then argued that the

---

[1] As defined in section 402 (b), Tariff Act of 1930, as amended by the Customs Simplification Act of 1956. See footnote 5, infra, for text.

[2] The raw cucumbers are identified as "pickle-type" by the parties, apparently not being suitable for other purposes.

[3] There is no dispute concerning classification on any of these entries. The goods are classified under item 141.75 of the Tariff Schedules of the United States (TSUS) which covers

Vegetables
Other
141.75 Packed in salt, in brine, or pickled.

[4] During the first trial evidence was introduced that Arnold, the importer, and Pickle-Mex, the exporter, were closely related partnerships. Byron Arnold, Jr., testified he was a partner in Pickle-Mex and general manager of Arnold, the partners of which were close relatives of his. Pickle-Mex grew approximately 70% of its own cucumbers in 1971 and the other 30% was purchased from independent growers. Gus Armado testified that he was employed by both Arnold and Pickle-Mex for his work in Mexico, Arnold paying for the related to growing cucumbers. Pickle-Mex did the inspecting, grading, and immersion in brine of the cucumbers. Although invoices made out to Arnold accompanied each entry stating prices for the merchandise, payment was not made per invoice but instead Arnold advanced money to Pickle-Mex at various times and a settlement was made at the end of the year.

only other appropriate basis for determining an "export value" was a sale of cucumbers in brine to a third party by Pickle-Mex, but because there was only a single sale the court was not persuaded that it should serve as an export value. The court adopted Arnold's view that § 402(b) [5] allowed an "export value" to be based on the price at which independent farmers sold *fresh* cucumbers to Pickle-Mex plus cost of packing them for shipment, which included the cost of immersion in brine, rejecting the Government's argument that this approach was a distortion of "export value" into "constructed value." [6]

The immersion process was effected by loading the cucumbers together with water and salt (and in some instances also ice) into a polyethylene liner in a truck. The court found that the "method of transportation did not advance the cucumbers towards 'pickleness' but did increase their salt content." (75 Cust. Ct. at 157.) The court concluded:

> When a particular type of packing is named in the tariff description I consider it a proper interpretation of section 402(b) to allow proof of the cost of packing as an addition to the export price of the basic article even though as a strictly technical matter the merchandise undergoing appraisement is the combination of basic article and packing. I see this as a lesser anomaly than the alternative conclusion that an article which in all other respects has an export price cannot have an export value because it is packed for export by a party which does not sell it for export. Thus, overriding considerations of fairness would lead me, in the present circumstances, to find an export value in the export price of the cucumbers plus the cost of their packing. [75 Cust. Ct. at 157.]

While appellee was thus successful in theory, nevertheless, it lost the battle. A plaintiff challenging appraisement not only must show that the Government was wrong, but also must prove the correct value. By failing to submit proof of inspecting and grading costs, part of the readying and packing costs, Arnold did not prove the export value it claimed, and the appraised value remained in effect.

Arnold did not appeal that judgment and the Government was not in a position to do so. Arnold then instituted this action and con-

---

[5] Section 402 (b) of the Tariff Act of 1930, as amended (19 U.S.C. 1401 a (b), reads:

"For the purposes of this section, the export value of imported merchandise shall be the price, at the time of exportation to the United States of the merchandise undergoing appraisement, at which such or similar merchandise is freely sold or, in the absence of sales, offered for sale in the principal markets of the country of exportation, in the usual wholesale quantities and in the ordinary course of trade, for exportation to the United States, plus, when not included in such price, the cost of all containers and coverings of whatever nature and all other expenses incidental to placing the merchandise in condition, packed ready for shipment shipment to the United States."

[6] A constructed value is only to be used for appraisement if there is no export value or United States value. 19 U.S.C. 1401a(a).

currently filed a motion for partial summary judgment on the ground that the basis for valuation was established in *Pickle I*. The Government countered by moving for judgment on the pleadings, asserting that *Pickle I* created a collateral estoppel which precluded appellee from relitigating appraisement of the same type of merchandise.

The court granted Arnold's motion for partial summary judgment (*Arnold Pickle & Olive Co.* v. *United States*, 79 Cust. Ct. 50, C.D. 4712 (1977)); the record of *Pickle I* was incorporated on appellee's motion; and all costs established in the first case were carried forward. Only the costs of inspection and grading, the missing elements of proof in the first case, required proof in the second trial.

The Government's motion for judgment on the pleadings was denied. The court did not consider the judgment against Arnold in *Pickle I* a proper basis for estoppel in this case inasmuch as there was no "precise determination in [the Government's] favor on the issue of valuation".

At the trial, the court determined that this time Arnold proved its total packing costs and that the claimed export value was thus fully established. Judgment was entered for Arnold.

The Government advances three rounds for reversal: (1) the price of fresh cucumbers does not constitute an "export value" exclusive of packing costs within the meaning of § 402(b) for cucumbers in brine; (2) appellee is precluded by principles of collateral estoppel from relitigating correct export values for the same type of merchandise considered in *Pickle I*; and (3) in any event, appellee failed to prove the costs of packing.

Because the first ground necessitates reversal, we do not reach the other issues.

Opinion

A dual burden of proof is imposed on one challenging the validity of the valuation at which imported merchandise has been appraised. The challenger must not only overcome the presumption of correctness attaching to the appraised value but also must establish the correctness of the alternative value being proposed.[7] *Dana Perfume Corp.* v. *United States*, 63 CCPA 43, 524 F. 2d 750 (1975); *H. S. Dorf & Co.* v. *United States*, 41 CCPA 183, C.A.D. 548 (1954). In this case Arnold must show (1) that "sales" between Arnold and Pickle-Mex do not provide an "export value" within the meaning of § 402(b) and (2) that an "export value" may properly be based on sales of fresh cucumbers, as asserted.

---

[7] Under the changes made by the Customs Court Act of 1980, 28 U.S.C. 2643(b), cases where appraisement has been proved to be erroneous may now be retried or reheard in appropriate circumstances.

best copy available

The amount of duty on appellee's imported merchandise is fixed by a rate determined by the classification under which the merchandise falls, that rate then being applied to the "value" of the merchandise, that is, its appraisement. This case presents only an appraisement question since neither party questions classification. Nevertheless, as an initial matter, it is appropriate to clarify the identification of the merchandise for *classification* purposes. Vegetables covered by item 141.75, TSUS, are "Other: Packed in salt, in brine, or pickled." The court below and the parties have referred to this item as covering "vegetables, *packed* in brine." [Emphasis added.] However, this reading of the statute is incorrect. The words "in brine" are not appended to the word "packed." "Packed in salt," "in brine," and "pickled" are the three categories in item 141.75, TSUS. [2] Thus, the goods here are "Vegetables, Other, * * * in brine," and appellee's goods will be referred to herein, where appropriate, as "cucumbers in brine." [8]

"IMPORTED MERCHANDISE" UNDER SECTION 402(b)

Section 402(b) provides (in pertinent part) that "the export value of *imported merchandise* shall be the price * * * at which *such* or *similar* merchandise is freely sold * * * " [emphasis added] [9] plus the costs of readying the goods for shipment, if not included. [3] Valuation under § 402(b) is a multi-step process, the first step being to determine what the "imported merchandise" is. Only after this question is answered are we in a position to decide whether there is an export value for the goods based on sales of such or similar merchandise. [10]

Appellee maintains, and the court below agreed, that the basic article imported (i.e., the "imported merchandise") is pickle-type cucumbers, the particular packing being immaterial. This position focuses on the evidence that pickle-type cucumbers, whether shipped in brine or not, are used for the same purpose after importation and are processed into pickles in the same way.

The Government, on the other hand, argues that immersion in brine alters the physical condition of the cucumbers. At the time of importation, therefore, the goods were no longer *fresh* cucumbers.

---

[8] The correct reading of item 141.75, TSUS, eliminates the foundation for one of appellee's arguments, namely that the words "packed in brine" in 141.75 and "packed, ready for shipment" in § 402(b) "speak in common terms," both thereby recognizing that the cost of that packing (the brine) could be added to the selling price of the merchandise without packing. Further, the court below also appears to have been influenced by the incorrect reading as indicated by the above-quoted statement that "a particular type of packing is named in the tariff description."

[9] *Cf.* footnote 5, supra, for complete text.

[10] If there is no "export value," the statute provides for alternative methods of valuation.

Accordingly, the Government contends the court below erred in its holding that fresh cucumbers were the basic article imported.

It is well settled that the condition of merchandise at the moment of importation establishes the basis for appraisement, that is, determines what the "imported merchandise" is under § 402(b). *United States* v. *Joseph Fischer*, 32 CCPA 62, 67, C.A.D. 286 (1944).

In *E. R. Squibb & Sons* v. *United States*, 28 Cust. Ct. 560, R.D. 8094 (1952), *aff'd* 31 Cust. Ct. 445, A.R.D. 29 (1953), *aff'd* 42 CCPA 23, C.A.D. 564 (1954), which raised a similar issue of what was the condition of the goods as imported, new drums had been filled with cod liver oil and were imported containing the oil. Although the contents entered free, the drums were separately subject to duty and, thus, separately appraised. The Government sought to appraise them as new drums. It was held that having been filled with oil, the drums no longer were new or unused at the time of importation and should have been appraised on the basis of the value for drums in their condition *as imported*, i.e., used drums.

Appellee cites *United States* v. *Arkell Safety Bag Co.*, 22 CCPA 258, T.D. 47210 (1934) for the proposition that a method of packing, in that case paper on different size rolls, did not change the merchandise into a different article. The article imported was held to be paper.

We do not find these authorities in conflict. The determinative factor in each case was the physical condition of the merchandise. On the facts of this case we must agree with the Government that the "imported merchandise" is cucumbers in brine, not fresh cucumbers. [4] Brining results in a permanently changed condition of the vegetables themselves. Appellee does not dispute that the salt content of the cucumbers was increased, as found by the court. Indeed, it was appellee's witness who testified that some of the salt from the brine is absorbed by the cucumbers. Thus, fresh cucumbers, once immersed in brine, are not thereafter in the condition of being "fresh" and cannot again become fresh by discarding the brine. The "packing" to some extent becomes a component of the imported article.

Congress has, we believe, recognized the physically different conditions of fresh vegetables and vegetables in brine in the classification schedule. By seeking classification as "in brine" appellee has acknowledged that its imported merchandise is physically different from fresh cucumbers. It is only by the addition of the brining that the goods take on their basic character. Fresh cucumbers, therefore, are not the "imported merchandise," freshness not being the condition of the goods at importation.

Appellee's further argument that fresh cucumbers and cucumbers in brine are not "dissimilar" goods is irrelevant to determining what is the "imported merchandise." While the statute provides that an

"export value" may in some circumstances be based on the selling price of "similar" merchandise, that does not change the initial question. It must be determined what the imported merchandise is inasmuch as the various bases set forth in the statute for determining "export value" must be considered seriatim. If there is a price for identical goods, export value cannot be based on the price for similar merchandise.

[5] Imported merchandise in §402(b) means the goods actually imported, not similar goods. In this case the imported merchandise is cucumbers in brine.

"SUCH OR SIMILAR MERCHANDISE" UNDER SECTION 402(b)

Having determined that the imported merchandise is cucumbers in brine does not end our inquiry. Even though the price at which independent farmers sold fresh cucumbers is not a price for the "imported merchandise," appellee would be entitled to prevail if the price paid for fresh cucumbers is for "similar" goods and if there is no selling price for cucumbers in brine which must be given precedence as an export value.

In this connection we must look to the definitions of "such or similar merchandise" provided in § 402(f)(4), (19 U.S.C. 1401a(f)(4)):

> (4) The term "such or similar merchandise" means merchandise in the first of the following categories in respect of which export value * * * can be satisfactorily determined:
>
> (A) The merchandise undergoing appraisement and other merchandise which is identical in physical characteristics with, and was produced in the same country by the same person as, the merchandise undergoing appraisement.
>
> (B) Merchandise which is identical in physical characteristics with, and was produced by another person in the same country as, the merchandise undergoing appraisement.
>
> (C) Merchandise (i) produced in the same country and by the same person as the merchandise undergoing appraisement, (ii) like the merchandise undergoing appraisement in component material or materials and in the purposes for which used, and (iii) approximately equal in commercial value to the merchandise undergoing appraisement.
>
> (D) Merchandise which satisfies all the requirements of subdivision (C) except that it was produced by another person.

The Government argues that the sales of cucumbers in brine by Pickle-Mex to Arnold provides an export value for the "merchandise undergoing appraisement," the first category above, and asks that we overturn the finding of the court below that there were no bona fide sales between these parties. However, there is substantial evidence in the record for this finding by the court.[11] Thus, appellee

[11] Some of the more pertinent evidence is noted in footnote 4.

has established that this basis for appraisement, presumably the basis used by the appraiser, was incorrect.

The Government further asserts that the court erred in next rejecting the price at which Pickle-Mex sold a single shipment of cucumbers in brine to an unrelated third party. Such goods would clearly fall within the description "other merchandise which is identical in physical characteristics" in subparagraph (A) above. On this point we disagree with the court's analysis that this single sale of cucumbers in brine was not a representative sale solely because of the much greater number of sales of fresh cucumbers. The comparison is not valid. If we were to remand for further consideration of this sale, the Government might prevail on this issue since a price for identical goods must be given precedence as an export value over a price for similar goods. However, in the interests of judicial economy, we will assume that this sale is not representative, as urged by appellee,[12] thereby reaching the question whether fresh cucumbers and cucumbers in brine are "similar merchandise" as that term is defined in § 402(f)(4).

Even before the Customs Simplification Act of 1956 added the above quoted definition of "such and similar merchandise," this court interpreted "similar" merchandise to mean merchandise which is not only used for the same purpose, but also is substantially the same in material and costs and sold at substantially the same price, thereby making the goods commercially interchangeable. *Cf. C. J. Tower & Sons* v. *United States*, 50 CCPA 76, C.A.D. 824 (1963) (non-tipped bobby pins not similar to rubber tipped bobby pins, the entries being made in 1952–54); *United States* v. *Kraft Phenix Cheese Corp.*, 26 CCPA 224, C.A.D. 21 (1938) ("Standard" and "Portion" Roquefort cheese not similar because process used to make "Portion" type enabled it to be smoothly cut). The definition set forth in subparagraph (C) above incorporates at least these criteria. Appellee made no attempt to prove similarity except in the purpose for which pickle-type fresh cucumbers and cucumbers in brine are used. [6]Being like the merchandise undergoing appraisement in use, while a necessary element of "similar" merchandise, is insufficient to establish that the merchandise is similar within the meaning of the statute. *B. A. McKenzie & Co.* v. *United States*, 47 CCPA 143, C.A.D. 748 (1960).

Summary

Merchandise must be appraised on the basis of its condition as imported. Because brining alters the physical condition of the vege-

[12] The record with respect to this sale is meager. Appellee argues that it was unable to put in all of its proof that the sale was unrepresentative because the court sustained the Government's objection to appellee's line of questioning concerning the sale.

table, the imported merchandise is cucumbers in brine not fresh cucumbers.

The finding by the court below that appraisement could not be based on the transactions between Arnold and Pickle-Mex in view of the interrelationship of the companies is supported by substantial evidence.

On the assumption that the single sale of cucumbers in brine to a third party is not representative and does not stand in the way of considering an export value based on the sale of similar goods, we conclude that the sales price for fresh cucumbers is not for merchandise "similar" to cucumbers in brine, within the statutory definition provided in § 402(f)(4)(C). Appellee has proved similarity in use only, which is insufficient.

Arnold has, thus, failed to satisfy the dual burden of proof imposed on one challenging the validity of the value at which its goods were appraised. Even though the basis for the appraised value, "sales" between Arnold and Pickle-Mex, has been proven erroneous, the appraised value for the imported merchandise must remain in effect since the only alternative basis asserted by Arnold, sales of fresh cucumbers, is also erroneous.

Accordingly, we *reverse* the judgment of the United States Court of International Trade.

354-806 O - 81 - 3

United States Court of International Trade

One Federal Plaza
New York, N.Y. 10007

Chief Judge

Edward D. Re

Judges

Paul P. Rao
Morgan Ford
Scovel Richardson
Frederick Landis
James L. Watson
Herbert N. Maletz
Bernard Newman
Nils A. Boe

Senior Judge

Samuel M. Rosenstein

Clerk

Joseph E. Lombardi

Decisions of the United States Court of International Trade

(Slip Op. 81–79)

KYOCERA INTERNATIONAL, INC., PLAINTIFF *v.* THE UNITED STATES, DEFENDANT

Before NEWMAN, *Judge*.

Court No. 77–7–01123

[Judgment for plaintiff.]

(Decided September 11, 1981)

Spensley Horn Jubas & Lubitz, Esqs. (*Stuart Lubitz* and *Wayne Willenberg*, Esqs., at the trial and on the briefs) for the plaintiff.

Stuart E. Schiffer, Acting Assistant Attorney General; *Joseph I. Liebman*, Attorney in Charge, International Trade Field Office, Commercial Litigation Branch (*Susan Handler-Menahem*, Esq., at the trial and on the briefs) for the defendant.

NEWMAN, *Judge*: At issue is the scope and meaning of certain portions of item 685.90 of the Tariff Schedules of the United States (TSUS) , and their application to the imported merchandise involved in this action.

Plaintiff imported certain ceramic articles from Japan used in integrated circuit devices, entered at the port of Los Angeles during 1976. The imports are described on the invoices as "MEP's" ("multilayer electronic parts"), with or without other descriptive information, and after further processing in the United States are used to "package" semiconductors.

The District Director classified the merchandise under item 685.90, TSUS, modified by T.D. 68–9 as "other electrical apparatus * * * for the protection of electrical circuits, or for making connections to or in electrical circuits", and assessed duty at the rate of 8.5 percent ad valorem. Plaintiff claims that the imported articles comprise parts of integrated circuits, and are properly dutiable under item 687.60, TSUS, modified by T.D. 68–9 as parts of "transistors and other related electronic crystal components" at the rate of 6.0 percent ad valorem.

For the reasons indicated below, plaintiff's claim is sustained.

I

The record herein consists of the testimony of three witnesses for plaintiff and of two witnesses for defendant, the official entry papers, twenty-two exhibits by plaintiff, and certain of defendant's answers to interrogatories and responses to requests for admissions.

Following are the relevant facts:

The imported merchandise comprises one of two major components of what is known in the semiconductor industry as a "multilayer integrated circuit package". In its imported condition, the merchandise in dispute is known as a "ceramic body" or "MEP", and consists of a minute piece of extremely hard ceramic material averaging about $\frac{3}{4}'' \times \frac{1}{4}'' \times \frac{1}{16}''$. Each ceramic body has a rectangular cavity in one of its two relatively large surfaces, and located around the interior surface of the rectangular cavity are a number of small discrete metallized areas called "bonding pads". Located along the two long narrow surfaces of the package are a number of other small discrete metallized areas called "brazing pads".

After importation, plaintiff performs the assembly and processing

required to complete the integrated circuit package. Specifically, plaintiff attaches a "lead frame" to each of the brazing pads of the ceramic body, and then gold-plates all exposed metallic surfaces. After completion of assembly and processing, the integrated circuit packages function as a package or housing for an associated integrated circuit chip and are sold to integrated circuit manufacturers.

An integrated circuit chip, containing tens or hundreds (or perhaps thousands) of transistors or related semiconductor components, is a very small (typically $\frac{1}{10}'' \times \frac{1}{10}'' \times \frac{15}{1000}''$ thick) and fragile piece of silicon. Inasmuch as such chips are fragile and extremely susceptible to corrosion damage when exposed to the normal environment, the chips must be physically shielded and protected by an appropriate housing or "package".

Following completion of assembly and processing by plaintiff, the subject merchandise provides this essential "housing" function by totally enclosing an integrated circuit chip in its internal cavity. When the package is ready to be used, an integrated circuit chip is first permanently affixed to the "die pad" in the package cavity. Thereupon, after minute "bonding wires" are connected from the the chip to the bonding pads in the package cavity, a lid is permanently affixed to the multilayer package so as to completely close the cavity, and thus totally seal the integrated circuit chip from the outside environment.

When the integrated circuit chip is enclosed in the package and the small metal "tie bar" is clipped from the leads of the package, the entire assembly is known in the electronics industry as an "integrated circuit". Despite the complete enclosure of the integrated circuit chip by the multilayer package, the chip remains electrically coupled to the outside world by means of the electrical paths through the chip bonding wires, bonding pads, metallization embedded in the package, and the leads.

To summarize briefly, the imported merchandise is one of the major components of an integrated circuit package. An integrated circuit package, in turn, is used as the housing for a very fragile integrated circuit chip so that the extremely minute and complex electronic circuitry contained in the chip becomes commercially useful. In its final form, the combination of the chip in an integrated circuit package is known, and commercially marketed, as an integrated circuit.

II

Turning to the legal aspects, at the outset it should be noted that defendant concedes that the imports are parts of integrated circuits

and as such are described in item 687.60, TSUS, as "other related electronic crystal components". However, in seeking to sustain the classification by the District Director under item 685.90, TSUS, defendant correctly points out that General Interpretative Rule 10(ij) of the *General Headnotes and Rules of Interpretation*, TSUS, provides that a provision for parts of an article does not prevail over a specific provision for such part. Upon this predicate, defendant contends that as to the integrated circuit packages in issue, item 685.90, TSUS is such a "specific" provision since it provides for "other electrical apparatus * * * for the *protection* of electrical circuits, or for making *connections* to or in electrical circuits" (emphasis added).

In support of its contention that the imports are used for the "protection" of electrical circuits, defendant relies upon the following lexicographic definitions:

"*Webster's Third New International Dictionary* (1963):

> protect—1. to cover or shield from that which would injure, destroy or detrimentally affect * * *

"*Funk & Wagnall's New Standard Dictionary of the English Language* (1956):

> 1. to keep as from harm, deterioration, danger, temptation or any other evil, by interposition, active or passive; preserve in safety; guard; shield; * * *

Based upon the foregoing definitions, there can be no doubt that the package *literally* "protects" the integrated circuit chip. Further inasmuch as the package connects the electric circuitry of the integrated circuit chip to the circuitry of the outside world (or printed circuit board), the package *literally* makes connections to or in electrical circuits. In a word, defendant advances this literal application of the statute to the merchandise.

Plaintiff, on the other hand, urges a more limited construction of the statute, citing a technical lexicographic authority and legislative history. In essence, plaintiff argues that "electrical apparatus" used for the "protection of electrical circuits" refers to articles which provide electrical forms of protection (such as that provided for by fuses), and that "connections to or in electrical circuits" refers to renewable forms of connection or those that are readily susceptible to coupling and decoupling.

Respecting the common meaning of the term "protection", plaintiff has called attention to the following definition of "circuit protection" in the *Modern Dictionary of Electronics* (Fifth ed. 1977), at 120:

> circuit protection—Automatic protection of a consequence-limiting nature used to minimize the danger of fire or smoke, as

well as the disturbance to the rest of the system which may result from electrical faults or prolonged electrical overloads.

The field of electronics is, of course, a technical one, and it is well settled that in instances where the common meaning of a technical term is in issue, as here, reliance should not be confined to general lexicons, but technical dictionaries may be consulted. *Siemens America, Inc. and Siemens Corporation* v. *The United States*, 84 Cust. Ct. —, C.D. 4856, 496 F. Supp. 266 (1980), affirmed as to this point, but reversed and remanded on other grounds. *United States* v. *Siemens America, Inc. and Siemens Corporation*, 68 CCPA —, C.A.D. 1266, — F. 2d — (1981).[1] Indeed, or Appellate Court has stressed: "too great reliance should not be placed on a general dictionary to determine the common meaning of technical terms." *Firth Sterling, Inc.* v. *United States*, 48 CCPA 130, 135, C.A.D. 779 (1961). See also, *United States* v. *The Spiegal Bros. Corp.*, 51 CCPA 69, 73, C.A.D. 839 (1964). While the terms "protection" and "connection" are in common usage, nevertheless they are clearly utilized in the statute in their *technical context* as used in the electronics field. *Cf. Brown Boveri Corp.* v. *United States*, 53 CCPA 19, 24, C.A.D. 870 (1966).

The testimony adduced by plaintiff establishes that the usage of the term "circuit protection" in the electronics field is entirely consistent with the technical dictionary definition above. It is fundamental that tariff terms presumably carry the meaning given them in trade and commerce. *Ozen Sound Devices* v. *United States*, 67 CCPA—, C.A.D. 1246, 620 F. 2d 880, 882 (1980); *Ameliotex, Inc.* v. *United States*, 65 CCPA 22, C.A.D. 1200, 565 F. 2d 674 (1977); *Esco Manufacturing Co., aka J. Hofert Co.* v. *United States*, 63 CCPA 71, 73, C.A.D. 1167, 530 F. 2d 949 (1976). Thus, plaintiff's expert witness Dickerson explained that the terms "electrical faults" and "prolonged electrical overloads" as used in the definition of "circuit protection" relate to the occurrence of excessive electrical current flowing through an electrical circuit. The record is clear that the imports do not protect circuits from electrical overloads, surges, or other *electrical* faults during abnormal situations (as do fuses and lightning arresters by the diversion of voltage or the interruption of current), and therefore do not perform the function of "circuit protection" as defined above. In sum, the lexicographic authority cited by plaintiff defines "protection" in the precise technical context in which the term is used in the statute, whereas the general dictionaries cited by de-

[1] Both parties cited the decision of this Court in their post-trial briefs. After the reversal and remand by the Court of Customs and Patent Appeals, the parties requested and were granted leave to file supplemental briefs. Plaintiff filed its supplemental brief on August 28, 1981 and defendant filed its responsive supplemental brief on September 3, 1981. Siemen's petition for rehearing in the CCPA was denied on August 27, 1981.

fendant define the term "protection" in an abstract and non-technical sense.

In addition to technical lexicographic authority concerning the common meaning of "protection", plaintiff relies upon the *Explanatory Notes to the Brussels Nomenclature* (1955), heading 85.19, as a source of legislative history respecting item 685.90, TSUS. Fundamentally, the *Brussels Nomenclature* may be referred to "as an aid to interpreting" provisions of the TSUS where there is a "close similarity in the wording" of the two provisions. *United States* v. *Abbey Rents*, 66 CCPA 2, n. 5, C.A.D. 1213, 585 F. 2d 501 (1978). In light of the similar phraseology in *Brussels* heading 85.19 and TSUS item 685.90, and the fact that there was no similar provision in the Tariff Act of 1930, it is beyond peradventure that the TSUS provision under construction was derived from the *Brussels Nomenclature*. Hence, the *Brussels Nomenclature* is part of the legislative history of item 685.90 and may be used as an aid to determining the intended scope of the TSUS provision.

Although legislative history is usually resorted to for the purpose of resolving ambiguity, it may also be studied to ascertain whether a literal interpretation conflicts with the intent of Congress, or whether certain words are employed with a meaning different from that usually given them. *Pacific Suppliers, Ltd. et al.* v. *United States*, 62 Cust. Ct. 517, C.D. 3819, 299 F. Supp. 1134 (1969); *W. R. Filbin & Co., Inc.* v. *United States*, 63 Cust. Ct. 200, 209, C.D. 3897 (1969). When acceptance of the literal meaning of words in a statute leads to results which are absurd or futile or plainly at variance with the policy of legislation, the legislative purpose will be followed. And even though, superficially, the meaning of statutory words appears clear, aids to their interpretation may be resorted to in pursuit of the purpose. *United States* v. *American Trucking Associations, Inc.*, 310 U.S. 534, 543–44 (1940).

Significantly, in *United States* v. *General Electric Co.*, 58 CCPA 152, 156, C.A.D. 1021, 441 F. 2d 1186 (1971), the Appellate Court adverted to appellant's reliance on the 1955 *Brussels Nomenclature* and the relevant explanatory notes in connection with item 685.90, TSUS, and made these illuminating comments:

> After a consideration of the language of item 685.90, *the background materials cited in aid of construction of that item*, and the arguments of counsel, we are not persuaded of reversible error in the decision of the Customs Court. We cannot agree with appellant's argument that rule 10(ij) requires that the provision of item 685.90 for "other electrical apparatus for making

> or breaking electrical circuits" must prevail over the provision for parts of radio reception apparatus in item 685.22. This is because we think the Customs Court was correct in its holding that the imported jacks, used in low current audio circuits, are not specifically provided for in item 685.90 since the items enumerated therein in all related to electrical power circuits.
>
> *We also think it pertinent to observe here that a seemingly broad descriptive tariff term is not to be taken as encompassing every article which may literally come within that term but rather only those articles of the type intended by Congress in enacting the TSUS.* *United States* v. *Andrew Fisher Cycle Co.*, 57 CCPA 102, C.A.D. 986 (1970). The jacks in the present case are not, in our opinion, the type of article Congress intended to encompass by item 685.90.
>
> We conclude with the Customs Court that "other electrical apparatus for making or breaking electrical circuits" in item 685.90, TSUS, is not a specific provision for the imported jacks, and that the jacks are properly classifiable as parts of radio reception apparatus under item 685.22, TSUS. [Emphasis added.]

The explanatory notes to the *Brussels Nomenclature* under heading 85.19 specifically identify the type of electrical devices "included" in the provisions for "apparatus for the protection of electrical circuits" and for "apparatus for making connections to or in electrical circuits". The short of the matter is that neither integrated circuit packages nor any devices serving a similar function are mentioned. Plainly then, integrated circuit packaging was not intended by Congress to be encompassed by the seemingly broad descriptions in item 685.90.

While defendant is quite correct that General Interpretative Rule 10(ij) provides that an article cannot be classified as a "part" if there is a specific provision for the article, to paraphrase *General Electric*, I conclude that "other electrical apparatus * * * for the protection of electrical circuits or for making connections to or in electrical circuits" in item 685.90, TSUS, "is not a specific provision" for the imported integrated circuit packages, and that the imports are properly classifiable as parts of "other related electronic crystal components" under item 687.60, TSUS. A semiconductor package is not, in my opinion, the type of article Congress intended to encompass by item 685.90. Consequently, it follows that General Interpretative Rule 10(ij) is not applicable in the instant case. The record establishes, and defendant concedes, that the imports are parts of "other related electronic crystal components".

Plaintiff's claim under item 687.60, TSUS is sustained; and judgment will be entered accordingly.

(Slip Op. 81–80)

CARLISLE TIRE AND RUBBER COMPANY, PLAINTIFF *v.* UNITED STATES, DEFENDANT

Before MALETZ, *Judge.*

Court No. 79–5–00748

On Plaintiff's Motion and Defendant's Cross-Motion for Summary Judgment

[Plaintiff's motion for summary judgment denied; defendant's cross-motion for summary judgment denied; and remand to the Secretary of Commerce ordered.]

(Dated September 11, 1981)

Eugene L. Stewart and *Daniel G. Rooney* for the plaintiff.

Stuart E. Schiffer, Acting Assistant Attorney General; *David M. Cohen*, Director, Commercial Litigation Branch (*Sheila N. Ziff* on the brief), for the defendant.

Lauren R. Howard; Collier, Shannon, Rill & Scott of counsel; for amicus curiae Bicycle Manufacturers Association of America, Inc.

MALETZ, *Judge:* Plaintiff, a domestic manufacturer of bicycle tires and tubes (BTT), challenges a negative countervailing duty determination published by the Secretary of the Treasury on January 12, 1979 involving bicycle tires and tubes from the Republic of Korea. 44 FR 2570–1. The determination was rendered under section 303 of the Tariff Act of 1930, as amended (19 U.S.C. § 1303), as that provision existed prior to January 1, 1980.[1]

In substance, the Secretary found that three Korean BTT manufacturers, Hung-A Industrial Co. Ltd. (Hung-A), Dae Yung Tire & Rubber Co., Ltd. (Dae Yung), and Korea Inoue Kassei Co., Ltd. (Inoue) received benefits from the Government of Korea under various countervailable programs. However, the Secretary further found that the aggregate benefits received by Hung-A and Dae Yung were 0.34 percent and 0.31 percent, respectively, which were considered *de minimis* in size and hence need not be countervailed.[2]

Presently before the court are cross-motions for summary judgment. Plaintiff argues (1) that even a *de minimis* benefit must be countervailed; and (2) that in any event amounts received by Hung-A and Dae Yung were not *de minimis* but actually were much greater than the amounts found by the Secretary. Defendant and amicus curiae

[1] January 1, 1980 was the effective date of the countervailing duty amendments made by the Trade Agreements Act of 1979. 93 Stat. 306–7 (1979).

[2] In the same determination, the Secretary assessed countervailing duties against Inoue whose aggregate benefits amounted to 0.50 percent ad valorem. Plaintiff does not contest this assessment.

argue, on the other hand, that the *de minimis* rule is applicable to a countervailing duty determination and that the Secretary correctly determined the amounts of the benefits.[3]

I

We consider first plaintiff's claim that even *de minimis* bounties and grants must be countervailed because of the mandatory language of the countervailing duty statute. However, this identical argument by the same plaintiff was rejected in this court's recent decision in *Carlisle* I, 517 F. Supp. at 706, where it was held that the *de minimis* doctrine is applicable to cases arising under the countervailing duty statute.

II

We turn next to plaintiff's argument that benefits received by Hung-A and Dae Yung from the Government of Korea under three countervailable programs were not *de minimis* but actually were much greater than the allegedly enormous amounts found by the Secretary. The programs involved (1) accelerated depreciation; (2) preferential income tax treatment; and (3) preferential short-term financing. Each of these programs will now be considered.

1. *Accelerated Depreciation.* Under Article 51 of the Enforcement Decree to the Korean Corporation Tax Law, certain businesses earning more than 50 percent of their total income during the business year from foreign exchange may increase the depreciation allowance for fixed assets used directly for exporting by 30 percent over the normal depreciation allowance. The Secretary found that in 1977, Hung-A benefited under this provision in an amount equal to 0.06 percent ad valorem which defendant later corrected to 0.09 percent.

The dollar amount utilized by Treasury in the computation of ad valorem value was supplied by the Government of Korea in response to a Customs' countervailing duty questionnaire. According to this response, Hung-A received $13,029 in benefits under the accelerated depreciation program. Allegedly this information was provided to the Government of Korea by Hung-A.

The manner in which Hung-A or the Korean Government computed the figure was unknown, as was the amount of normal depreciation

[3] It is to be noted that this case arises under the "old" countervailing duty law. Therefore the Secretary's determination of the amount of the net bounty or grant, as well as his decision not to impose countervailing duties, is subject to *de novo* review. *ASG Industries, Inc.*, v *United States*, 67 CCPA—, —, C.A.D. 1237, 610 F. 2d 770, 778-80 (1970)." Thus a mere showing of reasonableness on the part of the * * * [Secretary] does not suffice to establish the correctness of * * * [his] determination." *Carlisle Tire and Rubber Company* v. *United States*, 1 CIT—, 517 F. Supp. 704, 708 (1981) (hereafter referred to as *Carlisle* I).

experienced by Hung-A in 1977 and the amount of increased depreciation that Hung-A claimed in 1977. The figure of $13,029 supposedly supplied by Hung-A and transmitted by the Government of Korea was simply accepted by Treasury. Rather than seeking clarification, Treasury assumed the figure was correct in accordance with its policy of relying "upon the integrity and credibility of the responding foreign governments."

However, the attention of Treasury was directed to financial statements for the year 1977 that were filed by Hung-A in a then co-pending antidumping investigation. More specifically, Hung-A's Profit and Loss Statement and Statement of the Cost of Goods Manufactured, which were prepared by the company's certified public accountant and certified by the company's managing director to be true and correct, show that for the year 1977 Hung-A claimed normal depreciation in the amount of $710,656.66. Also, the record shows that in 1977, Hung-A took advantage of the program permitting accelerated depreciation in an amount equal to 30 percent of normal depreciation. Since Hung-A in that year claimed normal depreciation in the amount of $710,656.66, this amount for tax purposes seemingly should have been increased by 30 percent or $213,196.99.

This certified financial information provided directly by Hung-A to Treasury thus clearly called into question the accuracy of the depreciation figure of $13,029 supplied by the Government of Korea. In the face of this conflict, Treasury was not justified in accepting as complete and accurate the figure provided by the Korean Government, the origin of which was unknown. The ipse dixit of the Government of Korea was "hardly a factual basis supporting the conclusion that" the amount of the benefit received by Hung-A under the accelerated depreciation program was as set forth in its submission. *ASG Industries, Inc.* v. *United States*, *supra*, 610 F. 2d at 778 and n. 16.

Finally, in support of its motion for summary judgment, plaintiff states that the depreciation expenses presented in Hung-A's financial statements for 1977 were computed in accordance with generally accepted principles of accounting. Based on that premise and coupled with the fact that Hung-A exported 80 percent of its production by quantity, plaintiff has prepared its own computation concluding that the amount of the benefit received by Hung-A in 1977 under the accelerated depreciation program was 1.16 percent ad valorem.

What this all comes down to is that the figure of $13,029 which the Government of Korea transmitted to Treasury as the amount of benefit received by Hung-A in 1977 under its accelerated depreciation program cannot be reconciled with the depreciation figures contained

in Hung-A's own financial statements. Added to that, in the absence of explanation, it would appear that Hung-A's own financial data—which Treasury disregarded—would provide a more reliable indication of the accelerated depreciation benefits Hung-A received than the figure presented to Treasury by the Government of Korea. Given this circumstance, were it not for the conflict in figures, the court would be inclined to deem persuasive plaintiff's computations based on Hung-A's financial data. However, with this conflict unresolved, the court does not have sufficient information to determine what the truth is.

2. *Preferential Income Tax Treatment.* In his determination, the Secretary concluded that Dae Yung did not benefit under any of the Government of Korea's laws authorizing a reduction in, or exemption from, income taxes on business income. Plaintiff insists that this determination is erroneous, arguing that Dae Yung's income tax liability for 1977 was so low that it represented tax treatment amounting to a bounty or grant for which a countervailing duty should have been imposed.

The facts are these. During the then co-pending antidumping duty investigation involving bicycle tires and tubes from Korea, Dae Yung submitted to Treasury a Profit and Loss Statement covering its bicycle tire and tube operations for the calendar year 1977. That statement shows that in 1977 Dae Yung paid $4,643.74 in income taxes on a pretax income from BTT sales of $441,886.79—an income tax rate of only 1.05 percent.

The record indicates that in 1977, Dae Yung was not a publicly held corporation and therefore was treated as a closed corporation for Korean tax purposes. Under the tax laws of Korea, the income tax rate applicable to closed corporations that earned a net pretax income in excess of 5 million Won—which Dae Yung did—was 40 percent.

In its original petition, plaintiff claimed that the Korean BTT manufacturers were being subsidized by their government under various programs. The Government of Korea was queried about these programs and submitted responsive information in the spring of 1978. Subsequent to this submission, Dae Yung's Profit and Loss Statement came to the attention of counsel for plaintiff who then specifically brought it to the attention of Treasury by letter dated September 18, 1978.

When this matter was thus brought to its attention in connection with its countervailing duty investigation, Treasury had a duty, in accordance with the Congressional mandate, to make appropriate inquiries. However, Treasury did not pursue the matter. Therefore

the Government of Korea was never afforded the opportunity to present an explanation or otherwise indicate specifically that Dae Yung did not receive preferential income tax treatment. Consequently, there is nothing in the record to indicate that Dae Yung did not enjoy a benefit from its virtual tax-free status in 1977. In sum, the court has no factual basis for concluding that no net benefit had been received by Dae Yung.

We turn next to a contention by plaintiff that it is entitled to summary judgment on the basis of the information contained in Dae Yung's 1977 Profit and Loss Statement. Plaintiff reasons that at the normal Korean tax rate of 40 percent, Dae Yung had a potential tax liability of $176,754.55. It then asserts that since Dae Yung paid an actual income tax of only $4,643.74, it achieved an income tax saving of $172,110.81. According to plaintiff, dividing this saving in income tax by the amount of Dae Yung's total BTT sales in 1977 ($11,716,258.40), yields a countervailable ad valorem benefit of 1.47 percent.

But there is a basic difficulty with the entire premise of plaintiff's argument—bottomed as it is on the disparity between the actual tax paid by Dae Yung and the normal applicable rate. As amicus curiae points out, there are many other factors such as deductions or credits which could account for this disparity. In sum, plaintiff's claim that Dae Yung received a 1.47 percent ad valorem tax preference benefit is entirely speculative.

3. *Short-Term Preferential Financing.* During 1977, the Government of Korea, pursuant to the "Regulation for Export Financing," made available to exporters short-term loans at preferential rates for the purpose of acquiring raw materials used in production for export. These loans were repayable within 90 to 180 days at an interest rate of 8 percent. At the time, the commercial rate for similar loans was between 15 percent and 18 percent.

Both Dae Yung and Hung-A received funding under this program. In response to Customs' countervailing duty questionnaire, the Goverment of Korea stated that the monetary value of the benefit under this program to Dae Yung was $31,300 and to Hung-A, $41,400. Based on these two figures which Treasury accepted as accurate, even though it concededly did not know how they were calculated, Treasury determined that the ad valorem value of the benefit amounted to 0.31 percent in the case of Dae Yung and 0.28 percent in the case of Hung-A.

Other than a general claim by the Korean Government that pertinent data was supplied by the BTT producers, the record is barren of information concerning the origin of the data utilized by the

Secretary. There is nothing in the record that would afford insight into the manner in which the respective benefit amounts were derived or the formula or methodology that was employed. As in *Carlisle* I, 517 F. Supp. at 708, the data obtained by the Secretary did not indicate the amount of each loan and the actual duration of time it was outstanding. Thus, the Secretary's determination as to the ad valorem value of the benefits to Dae Yung and Hung-A was based on inadequate data.

Similarly without foundation is plaintiff's claim that the two figures submitted by the Korean Government represent interest expense savings for only a single month. Plaintiff would extrapolate these figures to yearlong figures on the assumption that the loans were continuously received throughout the year. On this basis, plaintiff calculates that Dae Yung saved $380,817 and Hung-A saved $503,700 in interest expenses during 1977. But this approach is speculative and rests on an assumption which lacks support in the record.

III

From the foregoing, it is apparent that the record does not contain sufficient information to enable the court to determine or reasonably estimate the amount of benefits received by the Korean exporters, let alone decide whether or not such benefits are *de minimis*. In sum, neither party has demonstrated what the truth is and plaintiff's motion and defendant's cross-motion for summary judgment are therefore denied.

Given this denial of the cross-motions, the court could simply allow this action to proceed to trial. But for the reasons set forth in *Carlisle* I, 517 F. Supp. at 708–709, remand of this action is warranted.

The action is stayed and the Secretary's negative countervailing duty determination is vacated. The action is remanded to the Secretary of Commerce [4] for further inquiries as may be needed to determine the ad valorem benefit provided the Korean bicycle tire and tube manufacturers by the Government of Korea. The redetermination is to be made in accordance with the countervailing duty law in effect prior to January 1, 1980. See Pub. L. 96–39, Title X, §§ 1002 (b)(1)(B) and (2), 93 Stat. 307. The Secretary is directed to report his redetermination to the court within 120 days of this order.

---

[4] The functions of the Secretary of the Treasury under 19 U.S.C. § 1303 were transferred to the Secretary of Commerce pursuant to Reorg. Plan No. 3 of 1979, § 5(a)(1)(C), 44 FR 69275, 93 Stat. 1381, eff. Jan. 2, 1980, as provided by section 1-107(a) of Ex. Ord. No. 12188, January 2, 1980, 45 FR 993.

(Slip Op. 81-81)

JULIAN B. WOODRUM, DENNIS DORSEY, AND SHERMAN JOHNSON, PLAINTIFFS *v.* RAY MARSHALL, SECRETARY OF LABOR, UNITED STATES DEPARTMENT OF LABOR, DEFENDANT

Before RE, *Chief Judge.*

Court No. 80-12-00105

ORDER

(Dated September 11, 1981)

Upon motion by plaintiffs for an order, pursuant to Rule 56.1' directing that the above-entitled action be submitted for determination by a motion for review of the administrative determination upon the agency's record, defendant's response thereto, upon all papers and proceedings had therein, and upon due deliberation, it is hereby

ORDERED that plaintiffs' motion be granted; and that this action shall be submitted for determination as prescribed by Rule 56.1; and it is further

ORDERED that the motion papers and briefs submitted by the parties shall address the following issues:

(1) Whether the firm or an appropriate subdivision of that firm employing plaintiffs "produced" like or directly competitive articles within the meaning of Section 222(3) of the Trade Act of 1974, 19 U.S.C. § 2272(3);

(2) Whether the Secretary of Labor's determination denying plaintiffs' certification of eligibility for trade adjustment assistance pursuant to Section 223 of the Trade Act of 1974, 19 U.S.C. protection under the law in that the Secretary's determination resulted in dissimilar treatment of similarly situated workers without a rational or reasonable basis therefor;

(3) Whether increased importation of foreign automobiles "contributed importantly" to the total or partial separation of plaintiffs, and to an absolute decline in sales or production by the firm or its subdivision employing plaintiffs within the meaning of Section 222 of the Trade Act of 1974, 19 U.S.C. § 2272;

(4) Whether the Secretary of Labor, or his designee, has a duty, pursuant to Section 221(a) of the Trade Act of 1974, 19 U.S.C. §2271(a), to publish notice in the Federal Register that he has received a petition for certification of eligibility for trade adjustment assistance and has initiated an investigation, and whether the Secretary's failure to do so was arbitrary, capricious, an abuse of discretion, or not otherwise in accordance with law;

(5) Whether the Secretary of Labor, or his designee, has a duty pursuant to Section 221(a) of the Trade Act of 1974, 19 U.S.C. § 2271(a), to initiate an investigation into plaintiffs'

petition for certification of eligibility for trade adjustment assistance, and whether the Secretary's failure to do so was arbitrary, capricious, an abuse of discretion, or not otherwise in accordance with law;

(6) Whether the Secretary of Labor, or his designee has a duty, pursuant to Section 223(c), of the Trade Act of 1974, 19 U.S.C. § 2273(c), to publish in the Federal Register a summary of his final determination of plaintiffs' petition together with his reasons for that determination, and whether the Secretary's failure to do so was arbitrary, capricious, an abuse of discretion, or not otherwise in accordance with law;

and it is further

ORDERED that plaintiffs' serve and file their brief no later than October 12, 1981; and it is further

ORDERED that defendant serve and file its response to plaintiffs' brief no later than November 12, 1981; and it is further

ORDERED that plaintiffs' serve and file their reply to defendant's response no later than November 23,1981.

Decisions of the United States Court of International Trade

Abstracts

Abstracted Protest Decisions

DEPARTMENT OF THE TREASURY, *September 14, 1981.*

The following abstracts of decisions of the United States Court of International Trade at New York are published for the information and guidance of officers of the customs and others concerned. Although the decisions are not of sufficient general interest to print in full, the summary herein given will be of assistance to customs officials in easily locating cases and tracing important facts.

WILLIAM VON RAAB,
Commissioner of Customs.

DECISION NUMBER	JUDGE & DATE OF DECISION	PLAINTIFF	COURT NO.	ASSESSED	HELD	BASIS	PORT OF ENTRY AND MERCHANDISE
				Par. or Item No. and Rate	Par. or Item No. and Rate		
P81/154	Newman, J. September 9, 1981	Border Brokerage Co., Inc.	75-8-01971	Item 674.53 7%	Item 660.85 4.5%	Agreed statement of facts	Seattle Air and hydraulic cylinders
P81/155	Newman, J. September 9, 1981	Kombi Ltd.	77-12-04986	Item 704.90 27.5% +25¢ per lb.	Item 735.05 Free of duty pursuant to GSP by virtue of Ex. Order 11888 of 11-24-75	Agreed statement of facts	New York Snowmobile gloves; product of eligible beneficiary country

Decisions of the United States Court of International Trade

Abstracts

Abstracted Reappraisement Decisions

DECISION NUMBER	JUDGE & DATE OF DECISION	PLAINTIFF	COURT NO.	BASIS OF VALUATION	HELD VALUE	BASIS	PORT OF ENTRY AND MERCHANDISE
R81/328	Re, C.J. September 8, 1981	Mitsubishi International Corp.	74-12-03318	Export value	Appraised values shown on entry papers less additions included to reflect currency revaluation.	C.B.S. Imports Corp. v. U.S. (C.D. 4739)	New York; Chicago Miscellaneous articles
R81/329	Re, C.J. September 8, 1981	Nichimen Co., Inc.	73-3-00834	Export value	Appraised values shown on entry papers less additions included to reflect currency revaluation	C.B.S. Imports Corp. v. U.S. (C.D. 4739)	New York; Seattle; Charleston; San Francisco; New Orleans Miscellaneous articles

DECISION NUMBER	JUDGE & DATE OF DECISION	PLAINTIFF	COURT NO.	BASIS OF VALUATION	HELD VALUE	BASIS	PORT OF ENTRY AND MERCHANDISE
R81/330	Re, C.J. September 8, 1981	Nichimen Co., Inc.	77-3-00372	Export value	Appraised values shown on entry papers less additions included to reflect currency revaluation.	C.B.S. Imports Corp. v. U.S. (C.D. 4739)	Chicago Miscellaneous articles
R81/331	Newman, J. September 8, 1981	Topp Electronics, Inc.	79-1-00152	Constructed value	Values specified on entry papers by liquidating officer excluding one-half of amount added for assists set forth in schedule of protests attached to decision and judgment.	C.B.S. Imports Corp. v. U.S. (C.D. 4739)	Seattle Miscellaneous articles
R81/332	Re, C.J. September 9, 1981	Douglas Homs Corporation.	74-9-02314	Export value	Appraised values specified on entry papers by liquidating officer, less any additions included reflect currency revaluation	C.B.S. Imports Corp. v. U.S. (C.D. 4739)	San Francisco Miscellaneous articles
R81/333	Re, C.J. September 9, 1981	Jak Pak, Inc.	73-5-01145	Export value	Appraised values specified on entry papers by liquidating officer, less any additions included which reflect currency revaluation	C.B.S. Imports Corp. v. U.S. (C.D. 4739)	Seattle Toys

R81/334	Re, C.J. September 9, 1981	Mitsubishi International Corp.	73-8-02446, etc.	Export value	Appraised values shown on entry papers less additions included to reflect currency revaluation	C.B.S. Imports Corp. v. U.S. (C.D. 4739)	New York Miscellaneous articles
R81/335	Re, C.J. September 9, 1981	Nichimen Co., Inc.	73-8-02432	Export value	Appraised values shown on entry papers less additions included to reflect currency revaluation	C.B.S. Imports Corp. v. U.S. (C.D. 4739)	Seattle; San Francisco; Los Angeles Miscellaneous articles
R81/336	Maletz, J. September 9, 1981	Mitsubishi International Corporation	73-10-02822, etc.	American selling price	Appraised values less 23%, per pair	Agreed statement of facts	New York Footwear
R81/337	Maletz, J. September 9, 1981	Mitsubishi International Corporation	74-7-01935, etc.	American selling price	Appraised values less 23%, per pair	Agreed statement of facts	New York Footwear
R81/338	Newman, J. September 9, 1981	Mitsubishi International Corporation	72-9-01954, etc.	American selling price	Appraised values less 23%, per pair	Agreed statement of facts	Baltimore Footwear
R81/339	Newman, J. September 9, 1981	Mitsubishi International Corporation	74-2-0366, etc.	American selling price	Appraised values less 23%, per pair	Agreed statement of facts	Los Angeles Footwear
R81/340	Newman, J. September 9, 1981	Mitsubishi International Corporation	74-6-01522, etc.	American selling price	Appraised values less 23%, per pair	Agreed statement of facts	New Orleans Footwear

DECISION NUMBER	JUDGE & DATE OF DECISION	PLAINTIFF	COURT NO.	BASIS OF VALUATION	HELD VALUE	BASIS	PORT OF ENTRY AND MERCHANDISE
R81/341	Newman, J. September 9, 1981	Topp Electronics, Inc.	79-11-01647	Constructed value	Values specified on entry papers by liquidating officer excluding one-half of amount added for assists set forth in schedule of protests attached to decision and judgment	Agreed statement of facts	Los Angeles Miscellaneous articles
R81/342	Ford, J. September 10, 1981	International Armament Corp.	R69/9737, etc.	United States values (pistols) Export value (air pistols and accessories)	Values set forth on schedules A–E, as appropriate, according to date of entry as set forth on schedule F (pistols) Invoice unit values, net packed (air pistols and accessories)	International Armament Corporation v. U.S. (C.D. 4827)	Alexandria (Norfolk) Pistols on Final List, T.D. 54521, described on schedules A–E attached to decisions and judgment, which have not been chromed, engraved, burnished or plated with gold or silver Air pistols and accessories not on Final List

Rehearing Motion Filed

SEPTEMBER 8, 1981

Armco, Inc. and CF & I Steel Corporation *v.* United States; Ah Ju Steel Co., Ltd., et al., Intervenors, Court No. 80-9-01435.—MOTION TO DISQUALIFY COUNSEL.—Slip Op. 81-69. Motion by Intervenors and Their Counsel.

37

Appeals to U.S. Court of Customs and Patent Appeals

APPEAL 81-20—United States *v.* Zenith Radio Corporation—ORDER DENYING DEFENDANT'S MOTION TO DISSOLVE OR MODIFY PRELIMINARY INJUCTION—TSUS—Appeal From Slip Op 81-14. Appeal Dismissed June 4, 1981.

Plaintiff-appellee, an American television manufacturer, filed a motion with the United States Court of International Trade for an order enjoining pendente lite the Secretary of Commerce, the Secretary of the Treasury, the Attorney General and the Commissioner of Customs, and their successors, agents and assigns, from implementing the terms of any settlement agreement entered into by or on behalf of the United States Department of Commerce, the United States Department of the Treasury, the United States Department of Justice, and/or the United States Customs Service, and various importers of television receivers from Japan subject to the Secretary of the Treasury's finding of dumping, T.D. 71-76 (1971). The agreement contained the following provision: "This Agreement shall be null and void in the event that there be, and upon, a judicial decision final by appeal, or if the time to appeal shall have expired without an appeal having been taken, that the United States did not have the right, power or authority to enter into this Agreement. Within ten (10) calendar days after such decision, the United States shall refund the consideration paid by the Company, pursuant to paragraph 2 above. Nevertheless, if, at the time the agreement be finally declared null and void, the entries of television receivers subject to T.D. 71-76 made prior to April 1, 1979, have been liquidated or reliquidated with no assessment of antidumping duties, and such liquidations or reliquidations have become final or conclusive upon all persons, the applicable consideration paid by the Company shall not be refunded."

Plaintiff-appellee claims that if the Government officials are not enjoined from implementing the settlement agreement, it stands to be irreparably injured; that it will have lost is right to judicial review; and that, if the settlement is implemented, it would result in the allegedly illegal forgiveness of liability for hundreds of millions of dollars in dumping duties to plaintiff-appellee's competitors.

Defendant-appellant claims that the enjoining of the settlement agreement would work a hardship on the public interest and third parties; that the Government agencies and the private parties took a number of steps in reliance upon the agreement; that the competitive position of plaintiff-appellee is not currently affected in an adverse manner by the importation of television receivers from Japan; and that plaintiff-appellee's position would not be harmed by non-enforcement of the antidumping statutes with respect to past entries; and that the public interest would best be served by mooting the present controversy.

The United States Court of International Trade held that the mooting of this controversy, which is what would result in the absence of an injunction, would constitute a disservice to the public interest, and ordered that plaintiff-appellee's motion for a preliminary injunction is granted; that the Secretary of Commerce, the Secretary of the Treasury, the Attorney General, and the Commissioner of Customs, and their successors, agents, and assigns are enjoined, pending the resolution of this case, from implementing the terms of any settlement agreement entered into by or on behalf of the United States Department of Commerce, the United States Department of the Treasury, the United States Department of Justice, and/or the United States Customs Service and various importers of television receivers subject to T.D. 71–76; that these Government officials and their successors, agents and assigns are enjoined from liquidating any entries of television receivers subject to the finding of dumping, T.D. 71–76, which were entered, or withdrawn from warehouse, for consumption on or prior to March 31, 1979.

Defendant-appellant, being dissatisfied with the decision and judgment of the United States Court of International Trade, respectfully prays to the United States Court of Customs and Patent Appeals, pursuant to Sections 1541(a) and 2601 (a) and (b), Title 28, United States Code, to review the questions involved therein and to grant such relief in the premises as to the Court shall seem just.

APPEAL 81–21—United States *v.* Oxford Industries—WEARING APPAREL—PRECUT FABRIC COMPONENTS OF MEN'S WOVEN SHORT-SLEEVED SHIRTS—BUTTONHOLDING OPERATIONS—TSUS—Appeal From Slip Op 81–30

The merchandise in this case consists of one dozen men's woven long-sleeve shirts (style 318) and one dozen short-sleeve men's shirts

(style 129), which were assembled in Mexico from components cut to shape and exported from Douglas, Arizona, in June, 1977. In addition to sewing the components together in Mexico, some of them were subjected to buttonholding operations, which the customs service determined were "fabrication" or "manufacturing" operations that advanced in value or the imported condition of the components. When the merchandise entered Douglas, Arizona, it was classified in liquidation under TSUS Item 380.84 as "other men's or boys' wearing apparel, not ornamented: not knit," at the duty rate of 25 cents per pound plus 27.5 percent ad valorem, in accordance with TSUS Item 807.00.

Plaintiff-appellee claimed that allowance in duty, in accordance with TSUS Item 807.00, should have been made for the collar band body and lining components and cuff body and lining components of the style 318 shirts, and for the collar band body and lining components of the style 129 shirts. Plaintiff-appellee also claimed that the buttonholding operations were assembly operations or operations incidental to assembly which did not disqualify the affected components from receiving the duty exemption accorded under TSUS Item 807.00. The Customs Service disallowed plaintiff-appellee's claims under TSUS Item 807.00 because the components were subjected to a buttonholding operation in Mexico.

In supporting the action taken by the customs service, defendant-appellant contended that "not only did the buttonholding operations complete the components in issue while abroad, they had a commercial and utilitarian function well after the assembly of the components into the shirts," and further that "the only assembly which occurred abroad was the joining or sewing of the seams or sewing the buttons onto the cuffs and collar bands."

The United States Court of International Trade held that after buttonholding, the disputed components were physically identifiable in the finished shirts, were not changed in shape, form, or otherwise, and were not advanced in value or improved in condition except by operations incidental to assembly. It followed, therfore, that plaintiff-appellee was entitled to the duty exemption accorded under TSUS Item 807.00.

Defendant-appellant, being dissatisfied with the decision and judgment of the United States Court of International Trade, respectfully prays to the United States Court of Customs and Patent Appeals, pursuant to Sections 1541(a) and 2601 (a) and (b), Title 28, United States Code, to review the questions involved therein and to grant such relief in the premises as to the Court shall seem just.

APPEAL 81-22—A. J. Arango, Inc. *v.* United States—MECHANICAL EQUIPMENT—HIGHLY FLEXIBLE EZS SHAFT COUPLINGS AND PARTS THEREOF—OTHER PARTS OF INTERNAL COMBUSTION ENGINES—TORSIONALLY FLEXIBLE COUPLINGS AND PARTS—TSUS—Appeal From Slip Op. 81-39.

In this case, torsionally flexible couplings and rubber parts, which were manufactured in West Germany, were entered at the Port of Tampa, Florida, in December 1975. Upon importation, the merchandise was classified by the Customs Service under Item 680.50 of the Tariff Schedules of the United States and assessed duty as shaft couplings and parts thereof at the rate of 9.5 percent ad valorem.

Plaintiff-appellant claims that the importations constitute more than shaft couplings because their primary purpose is the reduction of torsional vibration, and, therefore, are properly classifiable as other parts of internal combustion engines under Item 660.54 at the duty rate of 5 percent ad valorem.

Based upon the evidence of the record before it, the United States Court of International Trade dismissed the action.

Plaintiff-appellant claims that the United States Court of International Trade erred (1) in finding and holding that the subject merchandise is a "shaft coupling," (2) in not finding and holding that the subject merchandise is "more than" a shaft coupling, (3) in finding and holding that the subject merchandise is a shaft coupling of the type known as a "flexible coupling," (4) in not finding and holding that the subject merchandise is a "torsionally soft coupling," (5) in finding and holding that the evidence of record does not establish that the subject merchandise comprises other parts of internal combustion engines, (6) in not finding and holding that the evidence of record establishes that the subject merchandise constitutes parts of diesel engines, (7) in finding and holding that the subject merchandise is properly classifiable under Item 680.50, TSUS, and (8) in not finding and holding that the subject merchandise is properly classifiable under Item 660.54, TSUS.

Plaintiff-appellant, being dissatisfied with the decision and judgment of the United States Court of International Trade, respectfully prays to the United States Court of Customs and Patent Appeals, pursuant to Sections 1541(a) and 2601 (a) and (b), Title 28, United States Code, to review the questions involved therein and to grant such relief in the premises as to the Court shall seem just.

International Trade Commission Notices

Investigations by the U.S. International Trade Commission

DEPARTMENT OF THE TREASURY, SEPTEMBER 24, 1981

The appended notices relating to investigations by the U.S. International Trade Commission are published for the information of Customs officers and others concerned.

WILLIAM VON RAAB,
Commissioner of Customs.

In the Matter of CERTAIN STEEL ROD TREATING APPARATUS AND COMPONENTS THEREOF	Investigation No. 337-TA-97

Opportunity To File Preliminary Response

AGENCY: United States International Trade Commission.

ACTION: Having reviewed Motion Nos. 97-55 and 97-56, and the record in this investigation, the Commission has granted respondents an opportunity to file a preliminary response to Motion No. 97-55 no later than September 10, 1981. The preliminary response should address the threshold issue of whether a Temporary Exclusion Order proceeding in the form of a hearing before the Commission is warranted in this investigation.

SUMMARY: Opportunity for a preliminary response.

SUPPLEMENTARY INFORMATION: Notice is hereby given that complainant Morgan Construction Co. has filed Motion No. 97-55, requesting a Temporary Exclusion Order (TEO) and Motion No. 97-56, requesting that respondents' time to respond to Motion No. 97-55 be shortened.

After reviewing Motions Nos. 97-55 and 97-56 and the record in this investigation, the Commission has determined that respondents should be given an opportunity to submit a preliminary response

to Motion No. 97–55. The preliminary response should address the threshold issue of whether the allegations made in Motion No. 97–55 warrant a TEO proceeding in this investigation. Any such preliminary responses are due by close of business, September 10, 1981.

If the Commission determines on the basis of Motion No. 97–55 and any preliminary responses thereto that a TEO proceeding is warranted in this investigation, the Commission will set a hearing date and schedule. The schedule (if any) will give notice of any deadline for the submission of briefs by parties concerning the possible issuance of a TEO. Thus in the event that the Commission decides to conduct a TEO proceeding, respondents (and all other parties) will be given a further opportunity to respond to Motion No. 97–55 in the form of a brief.

FOR FURTHER INFORMATION CONTACT: Warren H. Maruyama. Esq., Office of the General Counsel, U.S. International Trade Commission, telephone 202–523–0375.

By Order of the Commission.

Issued: September 9, 1981.

KENNETH R. MASON,
Secretary.

U.S. INTERNATIONAL TRADE COMMISSION
WASHINGTON, DC 20436

S.O.C.
Series C/P–81–7

For release
September 17, 1981.

Preliminary Report on U.S. Production of Selected Synthetic Organic Chemicals (Including Synthetic Plastics and Resin Materials) June, July, and Cumulative Totals, 1981

The chemicals and synthetic plastics and resin materials covered in this report were selected, with the advice and assistance of industry and Government representatives, on the basis of their economic importance, seasonality, and specified uses. For the purpose of this report, production is defined as the sum of the quantities of each listed item made (a) for consumption in the producing plant, (b) for transfer to other plants of the same company, (c) for sale, and (d) produced under toll agreement.[1] Figures are reported on a 100% content basis unless otherwise specified. Where applicable, the statistics include data for materials produced by tar distillers, petroleum operators, and coke-oven operators. Data for materials produced by coke-oven operators are furnished by the Branch of Coal Statistics, Division of Coal & Power Statistics, Energy Information Administration, Department of Energy, and for the purpose of this report are partly estimated.

Chemical	Unit of quantity	Production		
		June 1981 [3]	July 1981 [3]	Cumulative total, January-July, 1981 [4]
Benzenoid Crudes				
Benzene (Benzol) (all grades)	1,000 gallons	171,348	166,533	1,081,655
Creosote oil (Dead oil): Distillate as such (100 percent creosote basis)	do	10,848	8,702	71,978
Naphthalene, petroleum, all grades	1,000 pounds	14,086	10,492	----------
Toluene:				
Total: (all uses)	1,000 gallons	121,816	114,137	822,825
Chemical grade (98–100 percent)	do	113,641	105,373	760,057
Fuel and other (90–97.9 percent)	do	8,175	8,794	62,768
Xylene:				
Total: (all uses)	do	71,925	60,414	526,235
Chemical grade (98–100 percent)	do	53,446	54,143	406,547
Fuel and other (90–97.9 percent)	do	18,479	6,271	119,688
Aliphatic Crudes				
1, 3-Butadiene (grade for rubber)	1,000 pounds	286,018	242,332	1,803,951
Ethylene	do	2,476,345	2,441,722	17,140,167
Propylene:				
Total:	do	1,195,939	1,248,879	8,511,179
Chemical and polymer grades (90–100 percent)	do	1,062,531	1,107,231	7,563,796
Other grades (38–89.9 percent)	do	133,408	141,648	947,383
Cyclic Intermediates				
Aniline	do	60,945	52,032	398,098
Chlorobenzene, mono-	do	25,100	21,387	170,403
Cyresylic acid and cresols (including mixtures)	do	8,694	6,779	65,642
Cumene	do	292,948	262,934	1,839,648
Cyclohexane	do	169,756	170,387	1,212,330
Dodecylbenzene (includes alkylbenzenes in which alkyl averages C_{11}–C_{12})	do	42,909	40,191	----------
Ethylbenzene	do	628,982	580,269	4,911,841
4, 4'-Isopropylidenediphenol (Bisphenol A)	do	46,310	26,077	314,573
Phenol:				
Synthetic	do	222,998	236,341	1,655,530
Natural	do	2,580	----------	----------
Phthalic anhydride	do	81,300	60,564	531,280
Styrene, monomer	do	490,086	514,067	4,034,803
Terephthalic acid, dimethyl ester [5]	do	522,036	526,477	3,751,040
Toluene 2,4- and 2,6-diisocyanate (80/20 mixtures)	do	58,345	60,012	358,864
o-Xylene	do	90,088	81,580	555,769
p-Xylene	do	265,685	234,660	2,195,764
Organic Pigments				
Pigment Yellow 12, C.I. 21 090	do	727	844	5,910
Pigment Blue 15, all forms, C.I. 74 160	do	713	527	5,412
Pigment Red 49, barium toner, C.I. 15 630	do	355	224	2,606
Medicinals and Chemicals (Bulk)				
Acetylsalicylic acid (aspirin)	do	1,620	1,811	17,561
Choline chloride, all grades	do	4,514	5,419	34,298
Penicillins, other than semi-synthetic	B.I.U. [6]	333,611	360,620	2,407,933
Sulfa drugs	1,000 pounds	300	131	2,300
Tetracyclines and derivatives	do	378	272	3,280

See footnotes at end of table.

Chemical	Unit of quantity	Production		
		June 1981 [3]	July 1981 [3]	Cumulative total, January-July, 1981 [4]
Plastics and Resins Materials				
Phenolic and other tar acid resins	1,000 pounds	192,502	151,774	1,327,870
Polyamide resins, nylon type	do	25,624	22,880	178,576
Polyethylene and copolymers:				
Specific gravity 0.940 and below	do	599,865	581,422	4,359,153
Specific gravity over 0.940	do	401,349	424,100	2,898,768
Polypropylene	do	347,288	346,610	2,387,216
Polyvinyl chloride and copolymers	do	552,157	517,447	3,648,547
Styrene polymers and copolymers:				
ABS resins	do	69,899	59,586	530,733
Other (including SAN resins)	do	428,986	408,705	2,906,539
Plasticizers				
Diisodecyl phthalate	do	11,139	8,733	87,163
Dioctyl phthalate	do	27,970	23,446	180,970
Pesticides				
Methyl bromide	do	----------	----------	----------
Methyl parathion	do	----------	----------	----------
Pentachlorophenol	do	----------	----------	----------
Miscellaneous End-Use Chemicals and Chemical Products				
Acrylonitrile polymers and copolymers for fiber	do	47,210	48,347	372,995
Nylon 6 and 6/6 polymer for fiber	do	174,323	180,257	1,266,269
Polyethylene terephthalate	do	249,515	249,592	1,765,052
Miscellaneous Cyclic and Acyclic Chemicals				
Acetic acid	do	204,426	224,281	1,600,000
Acetone	do	177,289	175,344	1,315,899
Acrylonitrile	do	164,396	176,942	1,166,064
Adipic acid	do	----------	----------	----------
Alcohols, C_{12} and higher (detergent range)	do	60,006	67,186	457,253
n-Butanol	do	73,127	85,503	497,366
Caprolactam	do	80,081	84,112	610,607
Carbon disulfide	do	36,139	----------	----------
Diethylene glycol	do	35,386	27,606	196,594
Ethanolamines (Mono-, di, and tri-)	do	33,995	30,228	250,302
Ethanol, synthetic	do	81,637	90,856	674,513
Ethyl acetate (85%)	do	20,586	24,228	159,890
Ethylene glycol mono-	do	405,718	329,888	2,321,152
Ethylene glycol, monoethyl ether	do	16,423	19,746	----------
Ethylene oxide	do	478,412	423,327	3,004,404
2-Ethylhexanol	do	36,536	35,838	242,300
Formaldehyde (37 pct. by weight)	do	504,243	461,154	3,566,032
Halogenated hydrocarbons:				
Carbon tetrachloride	do	57,892	80,368	450,786
Chlorodifluoromethane (F-22)	do	21,174	21,422	141,121
Chloroform (Trichloromethane)	do	36,143	38,615	232,890
Chloromethane (Methyl chloride)	do	33,310	33,566	214,825
Dichlorodifluoromethane (F-12)	do	23,939	30,020	184,617
Dichloromethane (Methylene chloride)	do	48,526	44,906	324,995
Ethyl chloride	do	22,760	24,421	184,823
Ethylene dichloride	do	933,358	874,291	6,147,577

See footnote at end of table.

Chemical	Unit of quantity	Production		
		June 1981 [3]	July 1981 [3]	Cumulative total, January–July, 1981
Miscellaneous Cyclic and Acyclic Chemicals—Con.				
Methylchloroform (1,1,1-Trichloroethane)	1,000 pounds	58,488	53,663	----------
Perchloroethylene (Tetrachloroethylene)	do	54,153	56,021	398,456
Trichloroethylene	do	----------	17,627	----------
Trichlorofluoromethane (F-11)	do	13,335	13,755	96,607
Vinyl chloride, monomer (Chloroethylene)	do	694,932	690,737	4,152,607
Isopropyl alcohol	do	134,536	112,478	1,026,924
Maleic anhydride	do	27,130	25,778	190,602
Methanol (synthetic)	do	718,731	747,156	4,928,498
Methyl ethyl ketone	do	44,376	46,071	399,322
Pentaerythritol	do	10,721	4,568	71,540
Propylene glycol	do	46,248	44,204	----------
Propylene oxide	do	----------	164,411	----------
Vinyl acetate, monomer	do	186,334	183,877	1,178,609

[1] A toll agreement is an agreement between two firms, under which one firm furnishes the raw materials and pays the processing costs and the other firm prepares the finished products and returns it to the first firm.

[2] Revised.

[3] Partly estimated.

[4] Totals are constantly revised as new and corrected information is received from reporting companies, hence they may not equal the sum of the monthly figures.

[5] The figures for terephthalic acid (DMT) are intended to include both the acid itself and the dimethyl ester without double counting. The acid figures are multiplied by the factor 1.16 to convert them to equivalent DMT.

[6] Billion international units.

NOTE.—Schedule of release date for subsequent monthly "C/P" reports:

Data for:	*Will be mailed.*
August 1981.	October 15, 1981.
September 1981.	November 19, 1981.
October 1981.	December 16, 1981.

Index

U.S. Customs Service

Treasury decisions:

	T.D. No.
Bonds:	
Carriers bonds	81-251
Consolidated aircraft bonds	81-254
Foreign currencies:	
Daily rates; Sept. 7-11, 1981	81-252
Variances; Sept. 7-11, 1981	81-253

U.S. Court of Customs and Patent Appeals

	C.A.D. No.
The United States v. Arnold Pickle & Olive Co	1270

U.S. GOVERNMENT PRINTING OFFICE : 1981 O - 354-806

DEPARTMENT OF THE TREASURY
U.S. CUSTOMS SERVICE
WASHINGTON, D.C. 20229

OFFICIAL BUSINESS
PENALTY FOR PRIVATE USE, $300

POSTAGE AND FEES PAID
DEPARTMENT OF THE TREASURY (CUSTOMS)
(TREAS. 552)

15/41

Customs Bulletin

Regulations, Rulings, Decisions, and Notices concerning Customs and related matters

and Decisions

of the United States Court of Customs and Patent Appeals and the United States Court of International Trade

NEWARK PUBLIC LIBRARY

Vol. 15 OCTOBER 14, 1981 No. 41

OCT 30 1981

U. S. GOVT. PUBS.
DEPOSITORY 376

This issue contains

T.D. 81-255 Through 81-258
Proposed Rulemaking
Recent Unpublished Customs Service Decisions
Slip Op. 81-82 and 81-83
Reap. Abstracts R81/343 Through R81/351
International Trade Commission Notices

THE DEPARTMENT OF THE TREASURY
U.S. Customs Service

T1.11/3:

NOTICE

The abstracts, rulings, and notices which are issued weekly by the U.S. Customs Service are subject to correction for typographical or other printing errors. Users may notify the U.S. Customs Service, Logistics Management Division, Washington, D.C. 20229, of any such errors in order that corrections may be made before the bound volumes are published.

For sale by the Superintendent of Documents, U.S. Government Printing Office, Washington, D.C. 20402. Price: $2.25 (single copy domestic); $2.85 (single copy foreign). Subscription price: $85.00 a year domestic; $106.25 a year foreign.

U.S. Customs Service

Treasury Decisions

(T.D. 81-255)

Bonds

Approval and discontinuance of Carrier's Bonds, Customs Form 3587

Bonds of carriers for the transportation of bonded merchandise have been approved or discontinued as shown below. The symbol "D" indicates that the bond previously outstanding has been discontinued on the month, day, and year represented by the figures which follow. "PB" refers to a previous bond, dated as represented by figures in paretheses immediately following, which has been discontinued. If the previous bond was in the name of a different company or if the surety was different, the information is shown in a footnote at the end of the list.

Dated: September 23, 1981.

Name of principal and surety	Date of bond	Date of approval	Filed with district director/area director/amount
Aloha Airlines, Inc., P.O. Box 30028, Honolulu, HI; air carrier; Pacific Ins. Co. Ltd.	July 8, 1981	July 16, 1981	Honolulu, HI $25,000
American Industrial Transportation, Inc., Highway 259 South, Henderson, TX; motor carrier; Old Republic Ins. Co. (PB 9/10/80) D 9/10/81 [1]	Sept. 10, 1981	Sept. 10, 1981	Detroit, MI $50,000
J. C. Bangerter & Sons, Inc., A Utah Corp., 1265 N. Main, Bountiful, UT; motor carrier; Commercial Union Ins. Co.	July 28, 1981	Sept. 11, 1981	San Francisco, CA $25,000
Best Way Transport, Inc., d.b.a.: Best Transport Co., 3841 N. Columbia Blvd., Portland, OR; motor carrier; Union Idemnity Ins. Co. of NY (PB 8/8/80) D 8/19/81 [2]	Aug. 8, 1981	Aug. 19, 1981	Portland, OR $25,000
Brookville Transport Ltd., P O. Box 2332, St. John's, New Brunswick; motor carrier; Washington International Ins. Co.	Aug. 25, 1981	Sept. 4, 1981	Portland, ME $25,000

See footnotes at end of table.

Name of principal and surety	Date of bond	Date of approval	Filed with district director/area director/amount
Circle B Transportation Corp. of North Dakota, P.O. Box 207, Wheatridge, CO; motor carrier; The Aetna Casualty & Surety Co. (PB 3/18/81) D 8/31/81[3]	June 1, 1981	Aug. 31, 1981	El Paso, TX $25,000
Denver Southwest Express, P.O. Box 9799, Little Rock, AR; motor carrier; St. Paul Fire & Marine Ins. Co. D 7/17/81	June 2, 1980	July 11, 1980	New Orleans, LA $25,000
Edgemere Terminals Inc.—See Pacesetter Transport Division			
Ehrlick Transport Ltd. and/or Des Roches Transport Ltd., 3250 Derry Rd., East, Mississauga, Ontario, Canada; motor carrier; The Continental Ins. Co. (PB 2/8/74) D 9/8/81[4]	Mar. 24, 1981	Sept. 9, 1981	Buffalo, NY $25,000
Gateway Transfer Co., Inc., 1319 Santa Ursula Ave., Laredo, TX; motor carrier; United States Fire Ins. CO.	Dec. 1, 1980	Sept. 8, 1981	Laredo, TX $60,000
Wm. H. P., Inc., 1345 N. Mascher St., Phila, PA; motor carrier; Aetna Casualty & Surety Co. D 9/30/81	June 14, 1980	June 24, 1980	Phila, PA $25,000
International Trailer Transport, P.O. Box 4067, Newark, NJ; motor carrier; Peerless Ins. Co. D 9/9/81	Feb. 21, 1977	Feb. 21, 1977	Newark, NJ $50,000
Gary Stuffo d.b.a.: Jersey City Transfer, P.O. Box 413, Mt. Laurel, NJ; motor carrier; Western Surety Co	June 1, 1981	Sept. 11, 1981	Phila, PA $50,000
Kent Cartage Inc., 456 Hopkins St., Buffalo, NY; motor carrier; Aetna Casualty & Surety Co. D 9/4/81	May 26, 1972	July 31, 1972	Buffalo, NY $25,000
Bill McKeen Trucking LTD, P.O. Box 112, Comber, Ontario, Canada; motor carrier; Old Republic Ins Co. (PB 9/5/80) D 9/5/81[5]	Sept. 5, 1981	Sept. 5, 1981	Detroit, MI $50,000
Marine Drop Box Co., 6849 N.E. 47th Ave., Portland, OR; motor carrier; Hartford Accident & Indemnity Co.	Aug. 24, 1981	Sept. 1, 1981	Portland, OR $25,000
Mirman Transportation, Inc., 86 Jack London Square, Oakland, CA; motor carrier; Washington International Ins. Co. D 9/25/81	Mar. 15, 1979	Mar. 20, 1979	San Francisco, CA $25,000
Ohio Container Service, Inc., 2701 Lakeside Ave., Cleveland, OH; motor carrier; Peerless Ins. Co. (PB 5/1/81) D 9/9/81[6]	Sept. 4, 1981	Sept. 9, 1981	Cleveland, OH $150,000
Pacesetter Transport Div. of Edgemere Terminals Inc 8004 Stansbury Rd. Balt., MD; motor carrier; Washington International Ins. Co.	Aug. 26, 1981	Aug. 27, 1981	Baltimore, MD $25,000
Pollard Delivery Service, Inc., Washington National Airport, Washington, D.C., motor carrier; Hartford Accident & Indemnity Co. (PB 5/17/68) D 5/17/76[7]	May 17, 1976	May 17, 1976	Washington, DC $25,000

See footnotes at end of table.

Name of principal and surety	Date of bond	Date of approval	Filed with district director/area director/amount
Short Freight Lines, Inc., 459 S. River Rd., Bay City, MI; motor carrier; The Aetna Casualty & Surety Co. (D 9/3/81)	Dec. 18, 1978	Jan. 9, 1979	Detroit, MI $50,000
Wahl Moving & Transfer Co., 16100 South Waterloo Rd., Cleveland, OH; motor carrier; Hartford Accident & Indemnity Co. (PB 7/30/69) D 9/9/81 [1]	Aug. 6, 1981	Sept. 9, 1981	Cleveland, OH $50,000

[1] Surety is St. Paul Fire & Marine Ins. Co.
[2] Surety is Midland Ins. Co.
[3] Principal is Circle B Transportation of North Dakota; Surety is Northwestern National Ins. Co. of Milwaukee, WI.
[4] Principal is Ehrlick Transport Ltd. and/or Transport Des Roches Ltee; Surety is Hartford Fire Ins. Co.
[5] Surety is St. Paul Fire & Marine Ins. Co.
[6] Surety is St. Paul Fire & Marine Ins. Co.
[7] Surety is Reliance Ins. Co.
[8] Surety is Western Surety Co.

BON-3-03

MARILYN G. MORRISON,
Director,
Carriers, Drawback and Bonds Division.

(19 CFR Part 4)

(T.D. 81-256)

Vessels in Foreign and Domestic Trades

AGENCY: U.S. Customs Service, Department of the Treasury.

ACTION: Final rule.

SUMMARY: This document amends the Customs Regulations to add Greece to the list of nations which permit vessels of the United States to transport certain articles specified in section 27, Merchant Marine Act of 1920, as amended, between their ports. The Department of State has furnished satisfactory evidence that Greece places no restrictions on the transportation of the specified articles by vessels of the United States between ports in that country. This amendment provides reciprocal privileges for vessels registered in Greece.

EFFECTIVE DATE: June 12, 1981.

FOR FURTHER INFORMATION CONTACT: Michael K. Tomenga, Carriers, Drawback and Bonds Division, U.S. Customs Service, 1301 Constitution Avenue NW., Washington, D.C. 20229 (202-566-5706).

SUPPLEMENTARY INFORMATION:

BACKGROUND

Section 27, Merchant Marine Act of 1920, as amended (46 U.S.C. 883) (the "Act"), provides generally that no merchandise shall be transported by water, or by land and water, between points in the United States except in vessel built in and documented under the laws of the United States and owned by U.S. citizens. However, the Act, as amended by Pub. L. 90–474 (82 Stat. 700; T.D. 68–227), provides that upon a finding by the Secretary of the Treasury, pursuant to information obtained and furnished by the Secretary of State that a foreign nation does not restrict the transportation of certain articles between its ports by vessels of the United States, reciprocal privileges will be accorded to vessels of that nation, and the prohibition against the transportation of those articles between points in the United States will not apply to its vessels.

Section 4.93(b)(1), Customs Regulations (19 CFR 4.93(b)(1)), lists those nations found to extend reciprocal privileges to vessels of the United States for the transportation of empty cargo vans, empty lift vans, and empty shipping tanks. Section 4.93(b)(2), Customs Regulations (19 CFR 4.93(b)(2)), lists those nations found to grant reciprocal privileges to vessels of the United States for the transportation of equipment for use with cargo vans, lift vans, or shipping tanks; empty barges specifically designed for carriage aboard a vessel and certain equipment for use with such barges; certain empty instruments of international traffic; and certain stevedoring equipment and material.

Greece is included in the list in section 4.93(b)(1), Customs Regulations, of those nations found to extend reciprocal privileges to vessels of the United States for the transportation of empty cargo vans, empty lift vans, and empty shipping tanks.

On June 12, 1981, the Department of State advised the Secretary of the Treasury that Greece places no restrictions on the transportation of the other articles listed in the Act by vessels of the United States between ports in Greece.

FINDING

On the basis of the information received from the Secretary of State, as described above, I find that the Government of Greece places no restrictions on the transportation of the other articles

specified in section 27 of the Merchant Marine Act of 1920, as amended, by vessels of the United States between ports in Greece. Therefore, reciprocal privileges are accorded to vessels registered in Greece as of June 12, 1981.

AMENDMENT TO THE REGULATIONS

To reflect the reciprocal privileges granted to vessels registered in Greece, section 4.93(b)(2), Customs Regulations (19 CFR 4.93 (b)(2)), is amended by inserting "Greece" in appropriate alphabetical order in the list of nations under this section.

(Sec. 27, 41 Stat. 999, as amended, sec. 14, 67 Stat. 516, Pub. L. 90-474, 82 Stat. 700 (5 U.S.C 301, 19 U.S.C. 1322(a), 46 U.S.C. 883))

INAPPLICABILITY OF PUBLIC NOTICE AND DELAYED EFFECTIVE DATE REQUIREMENTS

Because this is a minor amendment in which the public is not particularly interested and there is a statutory basis for the described extension of reciprocal privileges, notice and public procedure pursuant to 5 U.S.C. 553(b)(B) are unnecessary. In accordance with 5 U.S.C. 553(d)(1), a delayed effective date is not required because this amendment grants an exemption.

INAPPLICABILITY OF REGULATORY FLEXIBILITY ACT

This document is not subject to the provisions of sections 603 and 604 of title 5, United States Code, as added by section 3 of Pub. L. 96-354, the "Regulatory Flexibility Act." That Act does not apply to any regulation such as this for which a notice of proposed rulemaking is not required by the Administrative Procedure Act (5 U.S.C. 551 *et seq.*) or any other statute.

EXECUTIVE ORDER 12291

This amendment does not meet the criteria for a major regulation as defined in section 1(b) of E.O. 12291. Accordingly, a regulatory impact analysis is not required.

DRAFTING INFORMATION

The principal author of this document was Barbara E. Whiting, Regulations Control Branch, Office of Regulations and Rulings, U.S. Customs Service. However, personnel from other offices of the

Customs Service and the Departments of State and the Treasury participated in its development.

Dated: September 3, 1981.

JOHN P. SIMPSON,
Acting Assistant Secretary of the Treasury.

[Published in the Federal Register, October 1, 1981 (46 F.R. 48180)]

(T.D. 81—257)

Foreign Currencies—Daily Rates for Countries Not on Quarterly List

The Federal Reserve Bank of New York, pursuant to section 522 (c), Tariff Act of 1930, as amended (31 U.S.C. 372(c)), has certified buying rates for the dates and foreign currencies shown below. The rates of exchange, based on these buying rates, are published for the information and use of Customs officers and others concerned pursuant to Part 159, Subpart C, Customs Regulations (19 CFR 159, Subpart C).

Argentina peso:	
September 14–17, 1981	$0.000182
September 18, 1981	.000178
Chile peso:	
September 14–18, 1981	$0.025575
Colombia peso:	
September14–18, 1981	$0.017915
Greece drachma:	
September 14, 1981	$0.017227
September 15, 1981	.017271
September 16, 1981	.017467
September 17, 1981	.017905
September 18, 1981	.017889
Indonesia rupiah:	
September 14–18, 1981	$0.001582
Israel shekel:	
September 14, 1981	$0.075245
September 15, 1981	.075188
September 16, 1981	.075301
September 17–18, 1981	.075472
Peru sol:	
September 14–17, 1981	$0.002287
September 18, 1981	.002257

South Korea won:
September 14–18,1981 ..... $0. 001453

(LIQ–03–01 O:C:E)

Date: September 18, 1981.

KENNETH A. RICH,
Acting Chief,
Customs Information Exchange.

(T.D. 81–258)

Foreign Currencies—Variances From Quarterly Rate

The following rates of exchange are based upon rates certified to the Secretary of the Treasury by the Federal Reserve Bank of New York, pursuant to Section 522(C), Tariff Act of 1930, as amended (31 U.S.C. 372(c)), and reflect variances of 5 per centum or more from the quarterly rate published in Treasury Decision 81–183 for the following countries. Therefore, as to entries covering merchandise exported on the dates listed, whenever it is necessary for Customs purposes to convert such currency into currency of the United States, conversion shall be at the following rates.

Austria schilling:
September 14–15, 1981 ..... Quarterly
September 16, 1981 ..... $0. 061881
September 17, 1981 062657
September 18, 1981 062834

Belgium franc:
September 14–16, 1981 ..... Quarterly
September 17–18,1981 ..... $0. 026781

Brazil cruziero:
September 14–17, 1981 ..... $0. 009557
September 18, 1981 009388

Denmark krone:
September 14–16,1981 ..... Quarterly
September 17, 1981 ..... $0. 139082
September 18, 1981 139567

Finland markka:
September 14–17, 1981 ..... Quarterly
September 18, 1981 ..... $0. 235156

France franc:
September 14–17, 1981 ..... Quarterly
September 18, 1981 ..... $0. 183570

Germany deuches mark:	
September 14–16, 1981	Quarterly
September 17, 1981	$0.438596
September 18, 1981	.440529
Hong Kong dollar:	
September 14, 1981	$0.167015
September 15, 1981	.166861
September 16, 1981	.167084
September 17, 1981	.166945
September 18, 1981	.166945
India rupee:	
September 14, 1981	$0.109051
September 15–18, 1981	Quarterly
Ireland pound:	
September 14–16, 1981	Quarterly
September 17–18, 1981	$1.6025
Netherlands guilder:	
September 14–16, 1981	Quarterly
September 17, 1981	$0.396040
September 18, 1981	.396825
Republic of South Africa rand:	
September 14, 1981	$1.0465
September 15, 1981	1.0620
September 16, 1981	1.0610
Sri-Lanka rupee:	
September 14–17, 1981	$0.050163
September 18, 1981	.049092
Sweden krone:	
September 14, 1981	$0.175901
September 15, 1981	.177809
September 16, 1981	.180505
September 17, 1981	.181984
September 18, 1981	.181571
Switzerland franc:	
September 14–16, 1981	Quarterly
September 17, 1981	$0.509814
September 18, 1981	.513347
Thailand baht (tical):	
September 14–18, 1981	$0.043384

United Kingdom pound:
September 14, 1981 ..... $1.7950
September 15–18, 1981 ..... Quarterly

(LIQ–03–01 O:C:E)

Date: September 18, 1981.

KENNETH A. RICH,
Acting Chief,
Customs Information Exchange.

---

19 CFR Part 19

Proposed Customs Regulations Amendment Relating to Imported Smelted or Refined Products Containing Metal

AGENCY: U.S. Customs Service, Department of the Treasury.

ACTION: Proposed rule.

SUMMARY: This document proposes to amend the Customs Regulations to simplify the reporting requirements relating to the amount of dutiable metal in imported smelted or refined products. Customs believes the revenue would be amply protected without requiring that smelted or refined products containing dutiable metal be described in the warehouse withdrawal and delivery permit. Further, paper work and a reporting burden would be reduced.

DATES: Comments must be received on or before (60 days from publication in the Federal Register).

ADDRESS: Written comments (preferably in triplicate) should be addressed to the Commissioner of Customs, Attention: Regulations and Information Division, U.S. Customs Service, 1301 Constitution Avenue NW., Room 2426, Washington, D.C. 20229.

FOR FURTHER INFORMATION CONTACT: William Rosoff, Carriers, Drawback and Bonds Division, U.S. Customs Service, 1301 Constitution Avenue N.W., Washington, D.C. 20229 (202–566–5856).

SUPPLEMENTARY INFORMATION:

BACKGROUND

Imported metal-bearing materials may be entered into a bonded smelting or refining warehouse in the United States without the

payment of duties and smelted or refined, or both, together with other metal-bearing materials of domestic or foreign origin.

Upon the withdrawal for consumption of metal so smelted or refined, or both, duty is collected on the quantity of metal contained in the imported metal-bearing materials. In order to aid in determining the amount of duty to be paid, section 19.18(b), Customs Regulations (19 CFR 19.18(b)), provides that the warehouse withdrawal and delivery permit shall (1) describe the smelted or refined products to be withdrawn in terms of the condition in which they will be when released from Customs custody upon presentation of the delivery permit; (2) state the estimated amount of the dutiable metal contained in the products; and (3) the warehouse withdrawal shall specify the applicable wastage.

Customs has determined that the revenue is amply protected without requiring a description of the smelted or refined products containing dutiable metal in the warehouse withdrawal and delivery permit. The deletion of this requirement would reduce paper work and the reporting burden for those who must file the warehouse withdrawal and delivery permits and yet continue to provide adequate protection of the revenue. Accordingly, it is proposed to delete this requirement.

PROPOSED AMENDMENT

It is proposed to amend section 19.18(b), Customs Regulations (19 CFR 19.18(b)), by revising the fourth sentence of the section to read as follows:

19.18 SMELTING AND REFINING; ALLOWANCE FOR WASTAGE; WITHDRAWAL FOR CONSUMPTION.

* * * * * * *

(b) * * * The warehouse withdrawal and delivery permit shall state the estimated amount of the dutiable metal contained in the products, and the warehouse withdrawal shall specify the applicable wastage. * * *

AUTHORITY

This amendment is proposed under the authority of R.S. 251, as amended, sections 312, 624, 46 Stat. 692, as amended, 759 (19 U.S.C. 66, 1312, 1624).

COMMENTS

Before adopting this proposal, consideration will be given to any written comments that are timely submitted to the Commissioner of Customs. Comments submitted will be available for public inspection in accordance with section 103.8(b), Customs Regulations (19 CFR 103.8(b)), on regular business days between the hours of 9:00 a.m. to 4:30 p.m. at the Regulations and Information Di-

vision, Headquarters, U.S. Customs Service, 1301 Constitution Avenue, NW., Room 2426, Washington, D.C. 20229.

EXECUTIVE ORDER 12291

This proposed amendment is not a "major" regulation as defined in section 1(b) of E.O. 12291. Accordingly, a regulatory impact analysis is not required.

REGULATORY FLEXIBILITY ACT

It has been determined that the proposed amendment is not subject to the provisions of Pub. L. 96–354, the Regulatory Flexibility Act (5 U.S.C. 601–612), because publication of a notice of proposed rulemaking is not required by the Administrative Procedure Act (5 U.S.C. 551 *et seq.*), or any other law. This minor amendment would not impose any additional affirmative duty or burden on the public, but rather would merely reduce paper work and relax a reporting requirement. Accordingly, pursuant to 5 U.S.C. 553(b)(B), notice and public procedure thereon are believed to be unnecessary. However, recognizing that there may be some minor impact from the proposal, in an effort to assess any effects and provide the public with an opportunity to comment, it has been determined to publish this document as a proposed rule.

DRAFTING INFORMATION

The principal author of this document was John E. Elkins, Regulations and Information Division, Office of Regulations and Rulings, U.S. Customs Service. However, other Customs personnel participated in its development.

WILLIAM T. ARCHEY,
Acting Commissioner of Customs.

Approved: August 26, 1981.

JOHN P. SIMPSON,
Acting Assistant Secretary of the Treasury.

[Published in the Federal Register, October 1, 1981 (46 F.R. 48238)]

(19 CFR Parts 10, 18, 114, 143)

Proposed Amendments to the Customs Regulations Relating to Carnets

AGENCY: U.S. Customs Service, Department of the Treasury.

ACTION: Proposed rule.

SUMMARY: This document proposes to make conforming amendments to the Customs Regulations relating to the use of carnets.

354-807 O - 81 - 2

Carnets are international customs documents, backed by an internationally valid guarantee, that may be used for the entry of articles into a country in place of the usual customs documents required. The proposed amendments would: (1) implement an optional provision of the Customs Convention on the A.T.A. Carnet for the Temporary Admission of Goods; (2) reflect the withdrawal of the United States from the Customs Convention on the E.C.S. Carnets for Commercial Samples; and (3) correct typographical errors in the regulations relating to carnets.

DATES: Comments must be received on or before (60 days from the date of publication in the Federal Register).

ADDRESS: Comments (preferably in triplicate) may be addressed to the Commissioner of Customs, Attention: Regulations and Information Division, U.S. Customs Service, 1301 Constitution Avenue N.W., Washington, D.C. 20229.

FOR FURTHER INFORMATION CONTACT: Jerrold O. Worley, Office of Commercial Operations, U.S. Customs Service, 1301 Constitution Avenue NW., Washington, D.C. 20229 (202-566-8551).

SUPPLEMENTARY INFORMATION:

BACKGROUND

Carnets are international customs documents, backed by an internationally valid guarantee, which may be used for the entry of articles under various customs procedures such as temporary importation and transportation in bond (transit). The carnet is used in place of the usual national customs documentation and guarantees the payment of duties (including taxes and associated penalties) which may become due if the requirements under a particular customs procedure are not satisfied. The existence of a single international document rather than numerous national documents facilitates international commerce.

The carnet guarantee is based on international chains of national guaranteeing associations established in the countries accepting the carnets. The guaranteeing association is jointly and severally liable with the carnet holder for the payment of the sums due in the event of noncompliance with the conditions of the procedures for which the carnet is used.

TYPES OF CARNETS COMMONLY USED

A.T.A. Carnets. The A.T.A. ("Admission Temporaire-Temporary Admission") carnet is used for the temporary duty-free entry of professional equipment, commercial samples, and advertising material.

The use of the A.T.A. carnet allows the traveler or businessman to make customs arrangements in advance and to use a single document for goods which will pass through several different countries. A.T.A. carnets are valid for a period of 1 year. In the United States, the U.S. Council of the International Chamber of Commerce has been designated by the Customs Service as the United States issuing and guaranteeing organization for A.T.A. carnets.

E.C.S. Carnets. Before the United States withdrew from the Customs Convention on the E.C.S. Carnets for Commercial Samples, effective August 11, 1977, the E.C.S. ("Echantillons Commerciaux-Commercial Samples") carnet was used in the same manner as the A.T.A. carnet, but only for the temporary duty-free entry of commercial samples E.C.S. carnets were valid for one year. The U.S. Council of the International Chamber of Commerce also had been designated by the Customs Service as the United States issuing and guaranteeing organization for E.C.S. carnets.

T.I.R. Carnets. T.I.R. ("Transport International Routier-International Road Transport") carnets authorize road vehicles, containers, and their contents to transit one or more frontiers without customs inspection at intermediate points and with a minimum of other formalities. Road vehicles and containers transit the country or move from port of entry to final destination with their contents under customs seal. Inspection is accomplished at the final destination. T.I.R. carnets are valid until the end of the transit operation. The Equipment Interchange Association has been designated by the Customs Service as the issuing and guaranteeing association for T.I.R. carnets in the United States.

As a result of certain actions regarding the acceptance and use of carnets within the United States and to correct typographical errors found in previous amendments to the regulations relating to carnets, Customs proposes to make certain conforming amendments to the Customs Regulations. The following is a list of the proposed changes and the reasons for them:

1. The United States withdrew from the Customs Convention on the E.C.S. Carnets for Commercial Samples effective August 11, 1977. In a General Notice published in the Federal Register on August 25, 1977 (42 FR 42851), Customs announced that it would not accept E.C.S. carnets issued after August 10, 1977, for the temporary duty-free admission of commercial samples into the United States. The A.T.A. carnet was designated to replace the E.C.S. carnet for this purpose. Accordingy, modifications to various sections of Parts 10, 114, and 143, Customs Regulations (19 CFR Parts 10, 114, 143), are necessary.

2. At the request of the Secretary General of the Customs Cooperation Council, the United States has elected to exercise the option, under article 3, paragraph 3, of the Customs Convention on the A.T.A. Carnet for the Temporary Admission of Goods, to accept A.T.A. carnets for transit operations, permitting articles covered by A.T.A. carnets to be transported in bond. Therefore, modifications to various sections of Parts 18 and 114, Customs Regulations (19 CFR Parts 18, 114), are necessary.

3. By T.D. 75–41, published in the Federal Register on February 13, 1975 (40 FR 6646), section 10.68, Customs Regulations (19 CFR 10.68), was amended to include professional books, implements, instruments, and tools of trade, occupation, or employment, among the types of articles which are permitted to be returned, after having been temporarily taken abroad under cover of an A.T.A. carnet, without formal entry or payment of duty. However, the word "formal" was inadvertently omitted before the word "entry" and this made it appear that all the types of articles listed in section 10.68 could be returned without entry and without payment of duty if either an exportation voucher from an A.T.A. carnet or an application on Customs Form 4455 was filed prior to exportation. It is necessary to amend section 10.68 to: (1) clarify that in every case either an informal entry or a declaration is still required; and (2) state when each procedure is necessary.

4. Minor typographical errors in sections 114.12(b) and 114.26(c), Customs Regulations (19 CFR 114.12(b), 114.26(c)), also require correction.

PROPOSED AMENDMENTS TO THE REGULATIONS

It is proposed to amend Parts 10, 18, 114, and 143, Customs Regulations (19 CFR Parts 10, 18, 114, 143), in the following manner:

PART 10—ARTICLES CONDITIONALLY FREE, SUBJECT TO A REDUCED RATE, ETC.

It is proposed to amend section 10.68 (a) by inserting "formal" between "without" and "entry" in the first sentence and by adding the following between the first and second sentences:

10.68 PROCEDURE.

(a) * * * Articles exported under cover of an A.T.A. carnet (where the carnet serves as the control document) may, in accordance with this paragraph, be returned without entry or the payment of duty. If Customs Form 4455 is utilized, commercial travelers' samples, professional books, implements, instruments, and tools of trade

occupation, or employment may be returned with either an informal entry or a declaration on Customs Form 3299; theatrical scenery, properties, and effects and motion-picture films may be returned only with an informal entry. * * *

PART 18—TRANSPORTATION IN BOND AND MERCHANDISE IN TRANSIT

1. It is proposed to amend section 10.1(a) by adding a new paragraph (3) to read as follows:

18.1 CARRIERS; APPLICATION TO BOND.

(a) * * *

(1) * * *

(2) * * *

(3) Merchandise to be transported from one port to another in the United States under cover of an A.T.A. carnet (see Part 114 of this chapter) shall be delivered to a common carrier or contract carrier bonded for that purpose, but the merchandise thereafter may be transported with the use of other bonded or nonbonded common or contract carriers. The A.T.A. carnet shall be responsible for liability incurred in the carriage of merchandise under the carnet, and the carrier's bond shall be responsible as provided in section 114.22(d) of this chapter.

2. It is proposed to amend section 18.2(a) by adding "or A.T.A." after "TIR" in the second sentence and by deleting "TIR" from the third sentence.

3. It is proposed to amend sections 18.2(c) and 18.4(c) (2) by deleting "TIR" from the first sentence of each.

4. It is proposed to amend sections 18.5 (c) and (d) by deleting "TIR."

5. It is proposed to amend section 18.6 (d) by deleting "TIR" and by inserting "appropriate" between "the" and "guaranteeing" in the first sentence.

6. It is proposed to amend section 18.8(e) by substituting "114.22(d)" for "114.22(c)(3)" in the first sentence of subparagraph (2) and by adding a new subparagraph (3) to read as follows:

18.8 LIABILITY FOR SHORTAGE, IRREGULAR DELIVERY, OR NON-DELIVERY; PENALTIES.

* * * * * * *

(e) * * *

(1) * * *

(2) * * *

(3) The domestic guaranteeing association shall be jointly and severally liable with the initial bonded carrier for pecuniary penalties, liquidated damages, duties, and taxes accruing to the United States

and any other charges imposed as the result of any shortage, irregular delivery, or nondelivery at the port of destination or port of exit of merchandise covered by an A.T.A. carnet. However, the liability of the guaranteeing association shall not exceed the amount of the import duties by more than 10 percent. If an A.T.A. carnet is unconditionally discharged with respect to certain goods, the guaranteeing association will no longer be liable on the carnet with respect to those goods unless it is subsequently discovered that the discharge of the carnet was obtained fraudulently or improperly or that there has been a breach of the conditions of temporary admission or of transit. No claim for payment shall be made more than 1 year following the date of expiration of the validity of the carnet. The guaranteeing association shall be allowed a period of 6 months from the date of any claim by the district director in which to furnish proof of the reexportation of the goods or of any other proper discharge of the A.T.A carnet. If such proof is not furnished within the time specified, the guaranteeing association shall either deposit or provisionally pay the sums. The deposit or payment shall become final 3 months after the date of the deposit or payment, during which time the guaranteeing association may still furnish proof of the reexportation of the goods to recover the sums deposited or paid.

7. It is proposed to amend sections 18.11 (b), (c), (f), and (g), by deleting "TIR."

8. It is proposed to amend section 18.11(h) by deleting "TIR" from the first sentence and by substituting "114.22(d)" for "114.22(c)(3)" in the last sentence.

9. It is proposed to amend section 18.12(d) by deleting "TIR."

10. It is proposed to amend section 18.12(e) by substituting "carnets" for "a TIR carnet."

11. It is proposed to amend sections 18.20 (a) and (b) by deleting "TIR."

12. It is proposed to further amend section 18.20(b) by substituting "Sections 18.1(a) (2) and (3)" for "Section 18.1(a)(2)."

13. It is proposed to amend sections 18.24 (a) and (b) by deleting "TIR."

14. It is proposed to amend section 18.25(a) by adding the following at the end of the section:

18.25 DIRECT EXPORTATION.

(a) * * * If an A.T.A. carnet covers the merchandise which is to be exported directly without transportation, the carnet shall be discharged by the certification of the appropriate transportation and reexportation vouchers by Customs officers as necessary.

15. It is proposed to amend section 18.26(a) by adding the following at the end of the section:

18.26 INDIRECT EXPORTATION.

(a) * * * If merchandise has been imported under cover of an A.T.A. carnet to be transported in bond to another port for exportation, the appropriate transit voucher shall be accepted in lieu of Customs Forms 7512. One transit voucher shall be certified by Customs officers at the port of importation and a second transit voucher, together with the reexportation voucher shall be certified at the port of exportation.

PART 114—CARNETS

1. It is proposed to amend Part 114 by deleting sections 114.1(e) and 114.2(b) and marking those sections "Reserved."

2. It is proposed to amend section 114.12(b) by substituting "of" for "by" before future.

3. It is proposed to amend section 114.22(a) to read as follows:

114.22 COVERAGE OF CARNETS.

(a) *A.T.A. carnet.* The A.T.A. carnet is acceptable for goods to be temporarily entered, or temporarily entered and transported, under: (1) The Customs Convention on the Temporary Importation of Professional Equipment, or

(2) The International Convention to Facilitate the Importation of Commercial Samples and Advertising Material, which includes motion-picture advertising films not exceeding 16 mm., consisting essentially of photographs (with of without sound track) showing the nature or operation of products or equipment whose qualities cannot be adequately demonstrated by samples or catalogs, provided that the films:

(i) Relate to products or equipment offered for sale or for hire by a person established in the territory of another contracting party;

(ii) Are of a kind suitable for exhibition to the public; and

(iii) Are imported in a packet which contains not more than 1 copy of each film and which does not form part of a larger consignment of films.

There shall be presented with each carnet covering motion-picture advertising films a statement showing how each of the foregoing requirements is met.

(3) When the total of duties and taxes on any shipment covered by an A.T.A. carnet exceeds the amount for which the guaranteeing association is liable, the excess constitutes a charge against the Carrier's Bond of the carrier which receipts for the merchandise in accordance with 18.2(a) of this chapter.

4. It is proposed that section 114.22(b) be deleted and marked "Reserved."

5. It is proposed that section 114.22(c)(3) be redesignated as section 114.22 (d) and be amended by deleting "TIR."

6. It is proposed that section 114.23 (a) and the section heading be amended by deleting *"and E.C.S."* and "or E.C.S."

7. It is proposed to amend sections 114.24, 114.25, 114.26 (a) and (b), 114.34(b) by deleting "or E.C.S." wherever it appears.

8. It is proposed to amend section 114.26(c) by revising the first sentence to read as follows:

114.26 DISCHARGE, NONACCEPTANCE, OR CANCELLATION OF CARNETS.

* * * * * * *

(c) *Nonacceptance or cancellation of TIR carnets.* If a TIR carnet presented to Customs in not accepted, it shall best amped "Not Taken on Charge" (see section 114.22(c)(2). * * *

9. It is proposed to amend section 114.32 by substituting "A.T.A." for "E.C.S."

PART 143—CONSUMPTION, APPRAISEMENT, AND INFORMAL ENTRIES

1. It is proposed to amend section 143.21 by deleting "and" after the semicolon in subsection (g), by substituting a semicolon for the period at the end of subsection (h), by redesignating section 143.21(i) as section 143.21(j), and adding a new section 143.21(i) to read as follows:

143.21 MERCHANDISE ELIGIBLE FOR INFORMAL ENTRY

* * * * * * *

(i) Theatrical scenery, properties, and effects, motion-picture films, commercial travelers' samples and professional books, implements, instruments, and tools of trade, occupation, or employment, as set forth in section 10.68 of this chapter.

2. It is proposed to further amend section 143.21 by substituting a semicolon for the bracket at the end of the citation of authority and adding the following: "; T.D. 75–41, 40 FR 6646, February 13, 1975)"

COMMENTS

Before adopting this proposal, consideration will be given to any written comments timely submitted to the Commissioner of Customs. Comments submitted will be available for public inspection in accordance with section 103.8(b), Customs Regulations (19 CFR 103.8(b), on regular business days between the hours of 9:00 a.m. to

4:30 p.m. at the Regulations and Information Division, Room 2426, Headquarters, U.S. Customs Service, 1301 Constitution Avenue NW., Washington, D.C. 20229.

AUTHORITY

These amendments are proposed under the authority of R.S. 251, as amended, sections 484, 498, 624, 46 Stat. 722, as amended, 728 as amended, 729, sections 623,624, 46 Stat. 759, as amended, section 101, 76 Stat. 72, 77A Stat. 14 (19 U.S.C. 66, 1202 (General Headnote 11), 1484, 1498, 1623, 1624).

EXECUTIVE ORDER 12291

Because this document will not result in a regulation which would be a "major" rule as defined by section 1(b) of Executive Order 12291, a regulatory impact analysis and review as prescribed by section 3 of the Exective Order is not required.

REGULATORY FLEXIBILITY ACT

The provisions of the Regulatory Flexibility Act relating to an initial and final regulatory flexibility analysis (5 U.S.C. 603, 604) are not applicable to this proposal because the proposed amendments will not have a significant economic impact on a substantial number of small entities. Any economic impact flows directly from international agreements (the Customs Convention on the A.T.A. Carnet for the Temporary Admission of Goods and the Customs Convention on the E.C.S. Carnets for Commercial Samples) and not from the proposed implementing regulations. The proposal is not expected to: have significant secondary or incidental effects on a substantial number of small entities; impose, or otherwise cause, a significant increase in the reporting, recordkeeping, or other compliance burdens on a substantial number of small entities; or generate significant interest or attention from small entities through comments, either formal or informal.

Accordingly, it is hereby certified under the provisions of section 3 of the Regulatory Flexibility Act (5 U.S.C. 605 (b)), that the proposed amendments will not have a significant economic impact on a substantial number of small entities.

DRAFTING INFORMATION

The principal author of this document was Lawrence P. Dunham, Regulations and Information Division, Office of Regulations and

354-807 0 - 81 - 3

Rulings, U.S. Customs Service. However, personnel from other Customs offices participated in its development.

WILLIAM T. ARCHEY,
Acting Commissioner of Customs.

Approved: July 29, 1981.

JOHN P. SIMPSON,
Acting Assistant Secretary of the Treasury.

[Published in the Federal Register, October 1, 1981 (46 F.R. 48235)]

Recent Unpublished Customs Service Decisions

The following listing of recent administrative decisions issued by the U.S. Customs Service, and not otherwise published, is published for the information of Customs officers and the importing community. Although the decisions are not of sufficient general interest to warrant publication as Customs Service Decisions, the listing describes the issues involved and is intended to aid Customs officers and concerned members of the public in identifying matters of interest which recently have been considered by the U.S. Customs Service.

A copy of any decision included in this listing, identified by its date and file number, may be obtained in a form appropriate for public distribution upon written request to the Office of Regulations and Rulings, Attention: Legal Retrieval and Dissemination Branch, Room 2404, U.S. Customs Service, 1301 Constitution Avenue NW., Washington, D.C. 20229. These copies will be made available at a cost to the requester of $0.10 per page. However, the Customs Service will waive this charge if the total number of pages copied is ten or less.

Decisions listed in earlier issues of the Customs Bulletin, through February 2, 1981, are available in microfiche format at a cost of $30.90 ($0.15 per sheet of fiche). It is anticipated that additions to the microfiche will be made quarterly and subscriptions are available. Requests for the microfiche now available and for subscriptions should be directed to the Legal Retrieval and Dissemination Branch. Subscribers will automatically receive updates as they are issued and will be billed accordingly.

Dated: September 24, 1981.

B. JAMES FRITZ,
Director,
Regulation Control and Disclosure Law Division.

Date of decision	File No.	Issue
7-7-81	055986	Classification: metal source for ion beam systems (688.45)
7-17-81	065773	Classification: ladies fur trimmed textile coats (382.81)
7-10-81	065791	Classification: magnetic card readers (676.30, 676.52)

Date of decision	File No.	Issue
7-7-81	066762	Classification: injection molding machines (shoe machines) (678.10)
6-19-81	068289	Classification: sweater with knitted lace yoke considered to be almost wholly of lace (382.04)
8-13-81	068391	Classification: PVC corrugated sheets (771.43)
7-17-81	068743	Classification: chain pouch secured to motorcycle (706.60)
10-31-80	712859	Entry: procedures for notifying interested parties concerning the auctioning by Customs of confiscated birds
6-15-81	800738	Classification: infant boy's cardigan with textile strip over placket (382.78)
7-1-81	800772	Classification: PVC membranes, adhesive, solvents, and thinner liquids (359.60, 355.81, 355.82, 771.43, 774.55, PVC membranes only)
6-11-81	800803	Classification: man's woven cotton denim jean (380.39)
6-23-81	800811	Classification: ladies silk sweater (382.69)
7-8-81	800850	Classification: roofing material (359.50)
7-30-81	800862	Classification: color concentrates (473.70, 473.04, 408.44)
7-1-81	800882	Classification: heat transfer paper (273.75)
7-27-81	800892	Classification: cotton gauze fabric (321.44, 321.45, 321.43)
7-6-81	800895	Classification. men's woven cotton denim jeans (380.39)
7-8-81	800897	Classification: nylon shoulder strap (382.81)
7-9-81	800908	Classification: ladies sweater sets (382.04)
7-9-81	800910	Classification: poly material, a plastic coated or laminated textile fabric (355.65, 355.82)
8-4-81	800935	Classification: bandages composed of plastic adhesive strips with a nonmedicated woven cotton pad (386.50, 389.62)
7-24-81	800944	Classification: speech aperture and revolving cash transfer disk (657.25, 657.40)
7-27-81	800945	Classification: smokehouse (661.68)
7-27-81	800951	Classification: two types of man-made fiber shopping bags (389.40)
8-4-81	800961	Classification: ethoxylated or nonethoxylated cocodiethanolamide (465.15)
8-4-81	800963	Classification: electric fencing cable (642.17, 316.60)
8-4-81	800970	Classification: men's underwear (378.15)
7-27-81	800973	Classification: polyester film scrap (408 68)
8-4-81	800981	Classification: woman's sweater (382.04)
7-27-81	800986	Classification: cellent, a clear colorless free flowing liquid blood diluent (432.25)
7-27-81	800989	Classification: bone protector material (355.25)
8-4-81	800990	Classification: perfume (461.35)
7-24-81	800991	Classification: women's casual shoe (700.56)
7-30-81	800997	Classification: closed-toe, closed-back shoe with jute foxing (700.67)

Date of decision	File No.	Issue
8–4–81	800999	Classification: audiovisual system for surgery (757.25, 657.40, 685.10, 664.10, 685.90, 715.53)
7–30–81	801001	Classification: hemispherical head for a pressure vessel (609.80)
8–4–81	801006	Classification: various hydrocarbon solvents (475.35)
7–30–81	801009	Classification: mesh, circular vamp oxford (700.61, 700.67)
7–29–81	801011	Classification: "mast walker" used on yachts or pleasure boats (696.15)
8–4–81	801012	Classification: recorded floppy discs (724.40)
8–4–81	801017	Classification: shoes (700.35, 700.61, 700.95, 700.45)
8–19–81	801018	Classification: cabin tents with sewn-on labels (388.09)
8–18–81	801028	Classification: heat transfer system (640.35, 661.25, 661.30, 661.95, 660.97, 680.17, 711.78, 678.50, 712.49, 685.70)
8–4–81	801034	Classification: various lubricating oils (407.16, 475.45)
7–30–81	801038	Classification: ball-point pen with auto-pencil (760.05)
7–30–81	801044	Classification: "chemtainer", tank of plastic/metal to transport and store chemicals (640.30, 772.20)
8–6–81	801046	Classification: roller conveyor and parts (664.10, 660.97, 657.25)
8–6–81	801047	Classification: drywall steel studs and related products (609.80, 609.84)
8–24–81	801053	Classification: envelopes and printed matter (256.44, 274.75)
8–4–81	801055	Classification: magnetic cassettes (724.45, 724.40)
8–5–81	801058	Classification: cast polypropylene film and resin (771.43, 445.52)
8–24–81	801060	Classification: fibrous sausage casing papers (252.79)
7–30–81	801067	Classification: gas heaters (653.52)
8–5–81	801070	Classification: ladies knit, man-made fiber, sweater and skirt sets (382.78, 382.04)
8–19–81	801075	Classification: optic fibre lamp, battery operated (688.45)
8–4–81	801079	Classification: conveyor belting (358.06, 358.14, 358.16)
8–19–81	801082	Classification: gold precipitates (605.20)
8–18–81	801093	Classification: magic puzzler key chain (735 20, 740.30, 740.38)
8–24–81	801128	Classification: mechanical stoker (661.25)
8–18–81	801149	Classification: plastic garbage bags (774.55)
8–19–81	801154	Classification: planter nest (772.15)
8–24–81	801187	Classification: boy's pants (380.84)
8–26–81	801193	Classification: shotgun sights (730.57)
8–24–81	801194	Classification: man's vest and sleeves (380.04, 380.84)
8–31–81	801189	Classification: ladies' leather indoor carpet moccasin (700.45)

United States Court of International Trade

One Federal Plaza
New York, N.Y. 10007

Chief Judge

Edward D. Re

Judges

Paul P. Rao
Morgan Ford
Scovel Richardson
Frederick Landis
James L. Watson
Herbert N. Maletz
Bernard Newman
Nils A. Boe

Senior Judge

Samuel M. Rosenstein

Clerk

Joseph E. Lombardi

Decisions of the United States Court of International Trade

(Slip Op. 81–82)

ST. PAUL FIRE AND MARINE INSURANCE COMPANY, PLAINTIFF
v. UNITED STATES, DEFENDANT

Before MALETZ, *Judge*.

Consolidated Court No. 78–2–00315

On Defendant's Motion To Dismiss

(Dated September 16, 1981)

Wayne Jarvis, Ltd. (*Wayne Jarvis* and *Michael G. Hodes* on the briefs) for the plaintiff.

Stuart E. Schiffer, Acting Assistant Attorney General; *Joseph I. Liebman*, Attorney in Charge, International Trade Field Office, Commercial Litigation Branch (*Saul Davis* on the briefs) for the defendant.

MALETZ, *Judge:* This is an action contesting the denial of protests which were filed under section 514 of the Tariff Act of 1930, as amended (19 U.S.C. § 1514). Plaintiff, St. Paul Fire and Marine Insurance Company (St. Paul), is the surety for Universal Trade Corporation (Universal) and World Mint Corp. (World), the importers of record for the entries involved.

The entries were liquidated on June 18, 1975 and October 7, 1975, and St. Paul as surety paid the duties assessed by Customs. On August 29, 1975 and November 21, 1975, W. J. Byrnes & Co. (Byrnes), a licensed customshouse broker, filed protests challenging the assessments.

Prior to the filing of these protests, Universal had been adjudicated bankrupt on November 11, 1974 and World had been adjudicated bankrupt on April 28, 1975. A trustee in bankruptcy had been appointed for each.

The protests were denied by Customs on August 26, 1977 and November 18, 1977. The present suit followed.

Defendant has moved to dismiss on the ground that (1) the protests upon which the action is based are not valid because of Universal's and World's bankruptcy; and (2) St. Paul has no standing to maintain this action.

Initially, the parties disagree as to the firms on whose behalf the protests were filed. Plaintiff maintains that Byrnes filed the protests as agent for Universal and World, while defendant argues that Byrnes filed the protests as agent for St. Paul. However, it is unnecessary to resolve this particular dispute. For given the bankrupt status of Universal and World, it is concluded, for the reasons that follow, that irrespective of whether Byrnes acted as agent for Universal and World, or as agent for St. Paul, it lacked any authority to file the protests involved here.

At the outset, it is fundamental that an agent's authority to file a valid protest is coterminous with that of its principal. See, e.g., *United States* v. *Manny*, 463 F. Supp. 444, 447 (S.D.N.Y. 1978); *Restatement of Agency* (2d), § 7, Comment a (1957). Thus, accepting plaintiff's position that the protests were filed by Byrnes as agent for Universal and World, Byrnes could not have filed valid protests on behalf of those firms unless they themselves could have filed valid protests.

Similarly, accepting the government's position that the protests were filed by Byrnes as agent for St. Paul, we again must consider whether Universal and World had authority to file the protests. This is because in 1975, when the protests were filed, if St. Paul had any authority to file these protests it would have been as agent for

World and Universal.[1] And as agent, St. Paul's capacity to file the protests would have been no greater than that of Universal and World.

Additionally, even assuming that St. Paul, as surety, was subrogated to Universal's and World's claim for the refund of customs duties (see *St. Paul Fire & Marine Insurance Co.* v. *United States*, 370 F. 2d 870, 873 (5th Cir. 1967) and *American Surety Co.* v. *Morton*, 22 F.R.D. 261; 263 (E.D. Ill. 1958)), St. Paul merely stepped into the shoes for Universal and World and only acquired whatever rights to the refund of duties those firms had. *Community Nat. Bank* v. *Fidelity & Deposit Co.*, 563 F. 2d 1319, 1323 (9th Cir. 1977); *Hartford Acc. & Indem. Co.* v. *First Nat. Bank & Trust Co. of Tulsa, Okla.*, 287 F. 2d 69 (10th Cir. 1961.

Against this background, what must be decided is whether Universal and World had the capacity to file the protests involved here. As noted earlier, both of these firms were adjudicated bankrupt prior to the filing of the protests.

Here the Government's claims for customs duties arose with the entries of the imported merchandise. *Zenith Radio Corp.* v. *United States*, 1 CIT —, —, 509 F. Supp. 1282, 1286 (1981). These claims were provable against the bankrupts' estates and payable by the trustees in bankruptcy. *In Re Dolard*, 519 F. 2d 282, 285 (9th Cir. 1975); *In Re Rosenthal Bros.*, 235 F. 315 (S.D.N.Y. 1916). Given this circumstance, the payment of duties by St. Paul did not constitute an asset acquired by, or subject to being reclaimed by, the bankrupts. Rather, the payment of duties by St. Paul in the first instance inured to the benefit of the estates in bankruptcy.

Thus, the initial obligation for payment of the duties was "rooted in the prebankruptcy past" and as in the case of a tax refund any claim for refund of those duties vested in the trustees in bankruptcy. *Segal* v. *Rochelle*, 382 U.S. 375, 380 (1966). What St. Paul acquired by payment of the duties was a claim against the bankrupts' estates. *Standard Oil Co.* v. *Kurtz*, 330 F. 2d 178, 185 (8th Cir. 1964). And the trustees of those estates had an interest in limiting that claim by filing appropriate protests. To divest the trustees of that authority by finding that it is held by other parties would frustrate the trustees in protecting the assets of the estates. *Gochenour* v. *George & Francis Ball Foundation*, 35 F. Supp. 508, 527–18 (S.D. Ind. 1940), *aff'd*, 117 F. 2d 259 (7th Cir. 1941), *cert. denied*, 313 U.S. 566 (1941).

Considering that any claim for the refund of duties had vested in the trustees in bankruptcy, only they, and not the bankrupts, could properly pursue the claims by filing the protests. *Burkett* v. *Shell Oil*

---

[1] At the time the protests were filed, section 514 of the Tariff Act of 1930, as amended, provided that "protests may be filed by the importer, consignee, or any *authorized agent* of the person paying any charge or exaction . . . ." [Emphasis added.] The Trade Agreements Act of 1979, which gave sureties standing to file protests in their own right (93 Stat. 305) does not retroactively apply to the protests here. See P.L. 96-39 § 1002, 93 Stat. 307.

Company, 448 F. 2d 59 (5th Cir. 1971); *Dallas Cabana, Inc.* v. *Hyatt Corporation*, 441 F. 2d 865 (5th Cir. 1971); *Taylor* v. *Swirnow*, 80 F.R.D. 79, 82 (D. Md. 1978). And the fact that a trustee fails to assert a claim does not mean that title to the claim reverts to the bankrupt. Rather, in such a case, the bankrupt must petition the bankruptcy court for an order compelling the trustee to proceed or authorizing the bankrupt to do so. *Dallas Cabana, supra.*

Similarly, a creditor of the bankrupt may not pursue a claim because of the failure of the trustee in bankruptcy to proceed. As in the case of the bankrupt, the creditor may petition the bankruptcy court for leave to pursue the claim in the name of the trustee. *Gochenour* v. *George & Francis Ball Foundation, supra*, 35 F. Supp. at 517. Here, although St. Paul was creditor of the bankrupt corporations by virtue of its payment of the duties, it never petitioned the bankruptcy court for an order directing the trustees to file a protest or permitting St. Paul to do so itself.

In short, in view of the fact that any claim for the refund of duties vested in the trustees in bankruptcy and never passed to either the bankrupts or any of the bankrupts' creditors, the court concludes that regardless of whether Byrnes was acting as an agent for Universal and World, or as an agent for St. Paul, it lacked any authority to file the protests involved here. See *Restatement of Agency* (2d), *supra*, § 124(b) and comments. See, also, *Lewis Sagal & Co.* v. *Smith*, 35 F. 2d 182, 183 (3d Cir. 1929).

It is of course basic that a prerequisite to maintaining the present action was the filing of a valid protest. Here the protests were not filed by the trustees in bankruptcy who were the only parties with authority to file them. Accordingly, the protests filed by Byrnes were invalid and the action is hereby dismissed.[2]

(Slip OP. 81–83)

THE BABCOCK & WILCOX COMPANY, PLAINTIFF, *v.* UNITED STATES, DEFENDANT.

Court No. 80–5–00772

Memorandum to Accompany Order

(September 18, 1981)

RICHARDSON, J. *Amicus Curiae*, Sumitomo Metal Industries, Ltd., moves this court pursuant to Rule 24 (a) to intervene in this action as a party-in-interest with a view to petitioning the court for an order granting a rehearing of this court's decision culminating in an order

[2] In view of this disposition of the case, it is unnecessary to reach defendant's contention that St. Paul lacks standing to maintain the action.

dated August 20, 1981, or in the alternative, for a modification of the terms of such order to permit an interlocutory appeal therefrom to the Court of Customs and Patent Appeals. Additionally, Sumitomo moves the court for an order shortening the response time of the parties with respect to its motion to intervene, or in the alternative, enlarging the parties' time to move the court for a rehearing or modification of the decision of August 20th. Sumitimo asserts that it is an interested party involved in the administrative proceedings who has an unconditional right to intervene pursuant to 19 U.S.C., section 2631(j)(1)(B).

Rule 24(a) of the court's rules conditions a motion for intervenor status as a matter of right upon a "timely application". And section 2631 (j) (1) (B) states:

> Any person who would be adversely affected or aggrieved by a decision in a civil action pending in the Court of International Trade, may, be leave of court, intervene in such action, except that—
>
> * * * * * * *
>
> (B) in a civil action under section 516A of the Tariff Act of 1930 [19 U.S.C. § 1516a], only an interested party who was a party to the proceeding in connection with which the matter arose may intervene, and such person may intervene as a matter of right * * *

Thus, under section 2631(j)(1)(B) not only must the movant for intervenor status be an interested party, he must also be *a person who would be adversely affected or aggrieved* by the court's decision as of the time that the application is made. In other words, a person seeking leave to intervene in an action must make the application *before* the court's decision is rendered. [See in this connection Rule 24(c) of the court's rules which states that the motion shall be accompanied by a pleading setting forth the claim or defense for which intervention is sought.]

Sumitomo is not in such posture, having waited until after the court's decision was made before making the motion to intervene and the motion ancillary to the intervention motion. In fact, the only relief which Sumitomo sought in this action prior to the decision with which it is now aggrieved was leave to appear in the action as *Amicus Curiae*, which was granted on July 15, 1980 upon its representation that it was an interested party and upon the consent of the parties in this action. And, Sumitomo, having participated in this action as *Amicus Curiae*, and having filed a brief in the action in that capacity prior to the decision of August 20th, waived any right it would otherwise have had to intervene in the action.

Accordingly, the motions for leave to intervene and for ancillary relief must be denied.

Decisions of the United States Court of International Trade

Abstracts

Abstracted Reappraisement Decisions

DEPARTMENT OF THE TREASURY, *September 21, 1981.*

The following abstracts of decisions of the United States Court of International Trade at New York are published for the information and guidance of officers of the Customs and others concerned. Although the decisions are not of sufficient general interest to print in full, the summary herein given will be of assistance to Customs officials in easily locating cases and tracing important facts.

WILLIAM VON RAAB,
Commissioner of Customs.

DECISION NUMBER	JUDGE & DATE OF DECISION	PLAINTIFF	COURT NO.	BASIS OF VALUATION	HELD VALUE	BASIS	PORT OF ENTRY AND MERCHANDISE
R81/343	Re, C.J. September 16, 1981	Marco Polo Imports Ltd.	77-9-02896, etc.	Export value	Appraised values shown on entry papers less additions included to reflect currency revaluation	C.B.S. Imports Corp. v. U.S. (C.D. 4739)	New York Miscellaneous articles

DECISION NUMBER	JUDGE & DATE OF DECISION	PLAINTIFF	COURT NO.	BASIS OF VALUATION	HELD VALUE	BASIS	PORT OF ENTRY AND MERCHANDISE
R81/344	Re, C.J. September 16, 1981	Spartans Industries, Div. of Arlen Realty & Develop. Corp.	78-1-00040	Export value	Appraised values shown on entry papers less additions included to reflect currency revaluation	C.B.S. Imports Corp. v. U.S. (C.D. 4739)	New York Miscellaneous articles
R81/345	Watson, J. September 16, 1981	Geigy Chemical Corp.	R66/22293	United States value	U.S. selling prices, less 1% cash discount as determined by customs officer at time of appraisement; less 23.5% representing profit and general expenses usually made in U.S. on sales of dyestuffs of same class or kind; less costs of transportation and insurance from place of shipment to place of delivery in amounts determined by customs officer at time of appraisement divided by 1.40 or such other factor applied by customs officer to allow for customs duties payable on imported dyestuffs	U.S. v. Geigy Chemical Corporation et al. (C.A.D. 1155)	New York Benzenoid dyestuffs

R81/346	Maletz, J. September 16, 1981	Topp Electronics, Inc.	79-7-01332	Constructed value	Values specified on entry papers by liquidating officer excluding one-half of amount added for assists set forth in schedule of protests attached to decision and judgment	Agreed statement of facts	Los Angeles Miscellaneous articles
R81/347	Maletz, J. September 16, 1981	Topp Electronics, Inc.	79-1-00151	Constructed value	Values specified on entry papers by liquidating officer excluding one-half of amount added for assists set forth in schedule of protests attached to decision and judgment	Agreed statement of facts	Los Angeles Miscellaneous articles
R81/348	Re, C.J. September 17, 1981	Marco Polo Imports Ltd.	75-11-03015, etc.	Export value	Appraised values shown on entry papers less additions included to reflect currency revaluation	C.B.S. Imports Corp. v. U.S. (C.D. 4739)	New York Miscellaneous articles
R81/349	Watson, J. September 17, 1981	W. R. Filbin & Co., Inc., et al.	78-7-01339, etc.	Export value	Invoice unit prices shown on entry papers, net, packed	Agreed statement of facts	Buffalo Loudspeakers

DECISION NUMBER	JUDGE & DATE OF DECISION	PLAINTIFF	COURT NO.	BASIS OF VALUATION	HELD VALUE	BASIS	PORT OF ENTRY AND MERCHANDISE
R81/350	Watson, J. September 17, 1981	Geigy Chemical Corp.	R66/3000	United States value	U.S. selling prices, less 1% cash discount as determined by customs officer at time of appraisement; less 33.4% representing profit and general expenses usually made in U.S. on sales of dyestuffs of same class or kind; less costs of transportation and insurance from place of shipment to place of delivery in amounts determined by customs officer at time of appraisement divided by 1.40 or such other factor applied by customs officer, to allow for customs duties payable on imported dyestuffs	U.S. v. Geigy Chemical Corporation et al. (C.A.D. 1155)	New York Benzenoid dyestuffs

R51/351	Malets, J. September 17, 1951	Topp Electronics, Inc.	79-3-00308	Constructed value	Values specified on entry papers by liquidating officer excluding one-half of amount added for assists set forth in schedule of protests attached to decision and judgment	Agreed statement of facts	Los Angeles Miscellaneous articles

Decisions on Petitions for Rehearing Before the U.S. Court of Customs and Patent Appeals

August 20, 1981

Appeal 80-41.—CARLINGSWITCH, INC. *v.* UNITED STATES.—SWITCHES, indicator lights and related products—penalty case—refusal to refund duties—exaction—dismissal for lack of jurisdiction—summary judgment.—C.D. 4873 affirmed June 18, 1981 (C.A.D. 1264). Petition for rehearing filed by appellant on July 8, 1981 denied.

August 27, 1981

Appeal 80-33—UNITED STATES *v.* SIEMENS AMERICA, INC., ET AL.—Surge voltage protectors—electrical apparatus—electronic tubes --TSUS.—C.D. 4856 modified and remanded June 25, 1981 (C.A.D. 1266). Petition for rehearing filed by appellees on July16, 1981 denied.

International Trade Commission Notices

Investigation by the U.S. International Trade Commission

DEPARTMENT OF THE TREASURY, *October 1, 1981.*

The appended notices relating to investigations by the U.S. International Trade Commission are published for the information of Customs officers and others concerned.

WILLIAM VON RAAB,
Commissioner of Customs.

In the Matter of
CERTAIN AUDIOVISUAL GAMES AND COMPONENTS THEREOF (viz, Pac Man and Rally-X) } Investigation No. 337-TA-105

Notice of Amendment of Complaint

AGENCY: U.S. International Trade Commission.

ACTION: Notice is hereby given that the Commission has granted a motion pursuant to section 210.22(a) of the Commission's Rules of Practice and Procedure to amend the complaint in this investigation.

SUMMARY: On September 21, 1981, the Commission granted a motion (Motion 105-3) to amend the complaint in this investigation by joining 20 additional respondents, who are alleged to be infringing complainant's copyright and trademark rights in the Pac Man and Rally-X games. Although the effective date of such joinder is (insert the date of publication in the Federal Register), the parties joined by this action shall not be required to appear at the hearing on temporary relief, scheduled to commence on September 21, 1981. In addition, the parties joined by this action shall not be made subject to any *in personam* temporary relief pursuant thereto.

FOR FURTHER INFORMATION CONTACT: Jack Simmons,

Esq., Office of the General Counsel, U.S. International Trade Commission, telephone 202–523–0350.

SUPPLEMENTARY INFORMATION: On July 24, 1981, complainant moved (Motion 105–3) to amend the complaint by joining 33 additional respondents, who are alleged to be infringing complainant's copyright and trademark rights in the Pac Man and Rally-X games. On August 12, 1981, the presiding officer issued a recommended determination that the motion be granted. After consideration of Motion 105–3 and the response thereto by the Commission investigative attorney and the subsequent reply by the complainant, the Commission determined to amend the notice of investigation by the joinder of the following named parties:

Jackson & Co., Ltd., 2nd Floor No. 1 Lane, Yen Chi Street, Taipei Ta wan

C. J. Gasper, P 44 American Village, Fussa-City, Japan 197

Haitai International Inc., C.P.O. Box 4495, Seoul, Korea

Kyodo Agencies Ltd., 823 Moromizato, Okinawa City, Okinawa

Mama Top Corp., 3–1–3 Kitaando, Shizuoka City, 420 Japan

J. C. Wang & Co., 1560 Salvatierra Drive, Coral Gables, FL 33134

NCA International Import & Export, 1734 Taraval Street, San Francisco, CA 94116

Hua Chu Enterprises Co., Ltd., No. 81–32 Fu Shing N. Rd., Taipei, Taiwan

Spectron Corporation, Hibiya-Kashi Bldg., 28–15, Hatchobori 3 Chome, Chuo-Ku Tokyo, 104 Japan

B. P. Allies Co., Ltd., 8th Floor, Chung Hsiao Bldg., No. 85 Chung Hsiao E. Road Sec. 2; Taipei, Taiwan

Tiso Enterprises, Inc., P.O. Box 221184, Charlotte, NC 28222

Buffy Manufacturing Co., Inc., P.O. Box 44–132, Taipei, Taiwan

Sewin Co., Ltd., 500, Songrae-Dong, Buchu-Si, Kyungki-Do, Korea

Leijac Co., Ltd., 11–10, 5-Chome Nishinakajima, Yodogawa-Ku, Osaka, Japan 532

Impeuropex Corp. S.A.S., P.O. Box No. 49, 04100 Latina, Italy

United States Amusements Inc., P.O. Box 505, 2 West Northfield Road, Livingston, NJ 07039

Multigold Co., Ltd., P.O. Box 68–1996, Taipei, Taiwan

I Canstant Co., P.O. Box 68–302, Taipei, Taiwan

Jing Pung Electric Co., Ltd., P.O. Box 82, Tainan, Taiwan

Sunyard Corporation, P.O. Box 81–171, Taipei, Taiwan

By order of the Commission.
Issued: September 23, 1981.

KENNETH R. MASON,
Secretary.

In the Matter of
CERTAIN CARD DATA IMPRINTERS AND COMPONENTS & THEREOF } Investigation No. 337–TA–104

Order No. 55

Pursuant to my authority as Chief Administrative Law Judge, I hereby relieve Administrative Law Judge Janet D. Saxon and designate Admi iistrative Law Judge Donald K. Duvall as the Presiding Officer in this investigation, effective 5 p.m. this date.

The Secretary shall serve a copy of this order upon all parties of record and shall publish it in the Federal Register.

Issued: September 23, 1981.

DONALD K. DUVALL,
Chief Administrative Law Judge.

In the Matter of
CERTAIN SURFACE GRINDING MACHINES AND LITERATURE FOR THE PROMOTION THEREOF } Investigation No. 337–TA–95

Notice of Commission Request for Comments Regarding Proposed Termination of Respondents Based on Consent Order Agreements

AGENCY: U.S. International Trade Commission.

ACTION: A request for public comment on the proposed termination of two respondents based on consent order agreements.

SUMMARY: The consent order agreements would result in the termination of the investigation as to respondents Sigma Machinery, Inc. and Ramco Machinery Sales, Inc. This notice requests comments from the public on the proposed termination.

DATES: Comments will be considered if received within thirty (30) days of the date of publication of this notice. Comments should conform with section 201.8 of the Commission's Rules of Practice and

Procedure (19 CFR § 201.8), and should be addressed to Kenneth R. Mason, Secretary, U.S. International Trade Commission, 701 E Street NW., Washington, D.C. 20436.

SUPPLEMENTARY INFORMATION: Complainant Brown and Sharpe Manufacturing Company respondents Sigma and Ramco, and the Commission investigative attorney have moved jointly in separate motions for termination of this investigation as to those respondents on the basis of consent order agreements. On August 17, 1981, the presiding officer recommended that the joint motions be granted.

Notice of the institution of the investigation was published in the *Federal Register* of January 22, 1981 (46 FR 7107).

SETTLEMENT AGREEMENTS: The two proposed consent orders, which are identical except for the difference noted, provide in pertinent part as follows:

I. *IT IS ORDERED* That:

Respondent * * * refrain from importing or buying, Surface Grinding Machines into the United States directly or indirectly from Taiwan or other countries of the type and style which—

(a) are reproductions, copies, colorable imitations, or simulations * * * under the designations "510", "612", "618," "818", "824", "1024", "1030", "1224", and "1236"; or

(b) are of the type or style offered for sale heretofore by Lian Feng Machine Co. of Taiwan, China, under the designations "612", "618", "718" and "818" and/or those identified in Exhibit 14 attached to BROWN & SHARPE Complaint in this investigation. Respondent * * * will refrain from selling, leasing or otherwise transferring all Surface Grinding Machines in the preceding sentence that were imported into the United States after July 15, 1981 or after the effective date of this order, whichever occurs first.

Respondent * * * shall:

(a) refrain from copying, reprinting, using, selling or distributing * * * copies of manuals, catalogs, brochures or other printed material prepared or owned by BROWN & SHARPE and bearing a BROWN & SHARPE copyright notice;

(b) refrain from using or distributing for use any BROWN & SHARPE manual, catalog, or other printed material, or copies thereof in whole or in part, whether or not protected by copyright * * *;

(c) refrain from using photographs of BROWN & SHARPE

MFG. CO. Surface Machines * * * to market Surface Grinding Machines except those of BROWN & SHARPE;

(d) refrain from using BROWN & SHARPE, Micromaster, B&S or other registered trademarks of BROWN & SHARPE * * * except in connection with the sale of BROWN & SHARPE products;

(e) refrain from using any name, language, picture, or combination thereof which implies, suggests or creates an impression that respondent is selling Surface Grinding Machines made by BROWN & SHARPE MFG. CO. * * *

II. *It Is Further Ordered* That:

Respondent shall file a report under oath with the Commission within thirty (30) days of the anniversary date of the effective date of this order and annually for two (2) years thereafter indicating whether or not it is complying with Section I of this order and attaching copies of photographs, brochures, or advertising material it is using in connection with the sale of Surface Grinding Machines.

III. *It Is Further Ordered* That:

Respondent notify the Commission at least 30 days prior to any proposed material change in the organization of RAMCO, including dissolution, assignment or sale, the creation of subsidiaries or their dissolution, or any other change which may affect compliance obligations arising out of the order.

IV. *It Is Further Ordered* That:

In determining whether there has been compliance with the requirements and prohibitions of this Consent Order, the Commission may consider evidence of any activity engaged in by Respondent which is brought to its attention or of which it becomes aware.

For the purposes of securing compliance with this Consent Order, Respondent shall retain any and all records relating to the importation, sale or distribution of Surface Grinding Machines made and received in the usual and ordinary conduct of their business, * * * for a period of one (1) year from the close of the fiscal year to which they pertain, and in summary form for a period of two (2) years from the close of the fiscal year to which they pertain from which compliance with this order may be determined.

For the purpose of determining or securing compliance with this Consent Order * * * authorized representatives of the Commission shall, upon reasonable written notice by the Commission or its staff to Respondent, be permitted:

a. Access to and the right to inspect and copy in Respondent's principal office during the office hours of Respondent, and in the

presence of counsel or other representative if Respondent chooses, all books, ledgers, accounts, correspondence, memoranda, and other records and documents * * *;

b. Subject to the reasonable convenience of Respondent and without restraint or interference from it, to interview officers, directors, agents, partners or employees of Respondent who may have counsel present, regarding any of the matters contained in this Consent Order.

In paragraph 3 (III), the Commission Consent Order with Ramco Machinery Sales, Inc. includes the following: This requirement shall terminate upon expiration of the reporting period referred to in paragraph II above.

WRITTEN COMMENTS REQUESTED: In order to discharge its statutory obligation to consider the public interest, the Commission seeks written comments from interested persons regarding the effects of terminating this investigation as to respondents Sigma and Ramco on the basis of Consent Order agreements on (1) the public health and welfare, (2) competitive conditions in the U.S. economy, (3) the production of like or directly competitive articles in the United States, and (4) U.S. consumers. All written comments must be filed with the Secretary to the Commission no later than 30 days after the date of publication of this notice in the Federal Register. In addition, pursuant to 19 CFR § 210.14(a)(2), the Commission has requested comments from the Department of Health and Human Services, the Department of Justice, the Federal Trade Commission, and the U.S. Customs Service.

ADDITIONAL INFORMATION: The original and 19 copies of all written submissions must be filed with the Secretary to the Commission, 701 E Street NW., Washington, D.C. 20436, telephone 202–523–0161. Any person desiring to submit a document (or portion thereof) to the Commission in confidence must request *in camera* treatment. Such requests should be directed to the Secretary to the Commission and must include a full statement of the reasons why the Commission should grant such treatment. The Commission will either accept the submission in confidence or return it. All nonconfidential written submissions will be available for public inspection at the Secretary's office.

FOR FURTHER INFORMATION CONTACT: Clarease E. Mitchell, Esq., Office of the General Counsel, U.S. International

Trade Commission, 701 E Street NW., Washington, D.C. 20436; telephone 202–523–0148.

By order of the Commission.
Issued: September 22, 1981.

KENNETH R. MASON,
Secretary.

In the Matter of
CERTAIN WET MOTOR CIRCULATING PUMPS AND COMPONENTS THEREOF

Investigation No. 337–TA–94

Notice of Termination of Investigation

AGENCY: U.S. International Trade Commission.

ACTION: Termination of Investigation No. 337–TA–94, Certain Wet Motor Circulating Pumps and Components Thereof.

SUMMARY: The parties to this investigation have filed a joint motion to terminate on the basis of a settlement agreement. After reviewing the record, the Commission has voted to terminate the investigation.

SUPPLEMENTARY INFORMATION: In connection with the Commission's investigation under section 337 of the Tariff Act of 1930 (19 U.S.C. § 1337) of alleged unfair methods of competition and unfair acts in the importation into or sale in the United States of certain wet motor circulating pumps and components thereof, the complainant, Taco, Inc., and the respondents, Grundfos A. S., Grundfos Pumps, Inc., and Curtis V. Givan, filed a joint motion (motion No. 94–39) to terminate this investigation on the basis of a settlement agreement.

Notice of the pendency of the motion to terminate along with the text of the settlement agreement (with confidential information deleted) was published in the Federal Register on July 29, 1981 (46 FR 38793). By the terms of the notice, all comments were to be received by the Secretary to the Commission no later than July 28, 1981. No comments opposed to termination of the investigation were received.

RECONSIDERATION: Any party wishing to petition for reconsideration of the Commission's action must do so within 14 days of service of the Commission's Action and Order. Such petitions must be in accord with section 210.157 of the Commission's rules (46 FR 17530).

PUBLIC ACCESS TO RECORD: Copies of the Commission's Action and Order and any other public document on the record of this investigation are available to the public during official working hours (8:45 a.m. to 5:15 p.m.) in the Office of the Secretary, U.S. International Trade Commission, 701 E Street NW., Washington, D.C. 20436, telephone 202-523-0161.

FOR FURTHER INFORMATION CONTACT: William E. Perry, Esq., Office of the General Counsel, U.S. International Trade Commission, 701 E Street NW., Washington, D.C. 20463, telephone 202-523-1693.

By order of the Commission.

Issued: September 22, 1981.

KENNETH R. MASON,
Secretary.

In the Matter of CERTAIN MASS FLOW DEVICES AND COMPONENTS THEREOF	Investigation No. 337-TA-91

Notice of Termination of Investigation

AGENCY: U.S. International Trade Commission.

ACTION: Termination of investigation based on settlement agreement.

SUMMARY: Having reviewed the record in this investigation, including the presiding officer's recommendation, the Commission has voted to grant the parties' joint motion to terminate (motion 91-42) and is ordering the termination of investigation No. 337-TA-91, Certain Mass Flow Devices and Components Thereof. The motion was joined by all parties to the investigation.

PETITIONS FOR RECONSIDERATION: Any party wishing to petition for reconsideration of the Commission's action must do so within 14 days of service of the Commission order. Such petitions must be in accord with section 210.56 of the Commission's rules (19 CFR § 210.56).

SUPPLEMENTARY INFORMATION: On November 26, 1980, the Commission published notice of the institution of an investigation, pursuant to section 337 of the Tariff Act of 1930 (19 U.S.C. § 1337), of alleged unfair methods of competition and unfair acts in the importation and sale of certain mass flow devices and components thereof (45 F.R. 78843). On June 10, 1981, complainant Tylan

Corp., respondents Advanced Semiconductor Materials Holding, b.v. and Advanced Semiconductor Materials America, Inc., and the Commission investigative attorney jointly moved to terminate the investigation on the basis of a settlement agreement entered into by complainant and respondents. The presiding officer recommended that the Commission grant the motion.

The Commission published notice containing a summary of the proposed settlement agreement in the Federal Register on August 5, 1981, and requested comments from the public. No comments adverse to termination were received.

Copies of the Commission's Action and Order and any other public documents in this investigation are available for inspection during official working hours (8:45 a.m. to 5:15 p.m.) in the Office of the Secretary, U.S. International Trade Commission, 701 E Street NW., Washington, D.C. 20436; telephone 202–523–0161. The settlement agreement entered into by the parties contains confidential business information subject to a protective order and is not available for public examination.

FOR FURTHER INFORMATION CONTACT: Jane Albrecht, Esq., Office of the General Counsel, U.S. International Trade Commission, 701 E Street NW., Washington, D.C. 20436; telephone 202–523–1627.

By order of the Commission.

Issued: September 22, 1981.

KENNETH R. MASON,
Secretary.

In the Matter of CERTAIN MODULAR PUSHBUTTON SWITCHES AND COMPONENTS THEREOF	Investigation No. 337–TA–96

Notice of Commission Request for Comments Regarding Settlement Agreements

AGENCY: U.S. International Trade Commission.

ACTION: Request for public comment on proposed termination of investigation based on settlement agreements.

SUMMARY: The settlement agreements would result in the complete termination of this investigation. This notice requests comments from the public on the proposed settlement agreement within thirty (30) days of publication of this notice in the Federal Register.

DATES: Comments will be considered if received within 30 days of publication of this notice. Comments should conform with section 201.8 of the Commission's Rules of Practice and Procedure (19 CFR 201.8), and should be addressed to Kenneth R. Mason, Secretary, U.S. International Trade Commission, 701 E Street NW., Washington, D.C. 20436.

SUPPLEMENTARY INFORMATION: Complainant, ITT Schadow, Inc. has moved for termination of this investigation on the basis of 3 settlement agreements. Respondents Tanaka Electronics Industries, Ltd., Toneluck Electronics Industrial Co., Ltd., Electronic Components Groupe, Inc., and Hosiden Electronics Company, and party International Telephone and Telegraph Corporation support the motion. On August 11, 1981, the presiding officer recommended that the joint motion be granted.

Notice of the institution of the investigation was published in the Federal Register of December 31, 1980 (45 FR 86564).

SETTLEMENT AGREEMENTS: Under the first agreement, respondent Tanaka promises not to export to the United States modular pushbutton switches with removable stop means until the expiration of the '963 reissue patent. In exchange, Schadow and ITT waive all claims of patent infringement in all forms based upon past importation of such switches. In the second agreement, respondents Toneluck Electronics Industrial Co., Ltd., and Electronic Components Groupe, Inc., (ECG), promise not to import certain alternate action switches which are made in accord with the '963 patent or to import staples which could be used to convert momentary switches into alternate action switches. Toneluck and ECG will, however, import "Plan A" alternate action and momentary switches, provided that they plug the holes in the tabs of such switches by January 1, 1982. The parties waive all claims for previous patent infringement or any other past act. ITT and Schadow further promise not to file any notice with respect to ECG and Toneluck's future importation of Plan A switches. In the third agreement, ITT and Schadow grant to respondent Hosiden a nonexclusive license to import and sell pushbutton switches covered by any claim of the '963 reissue patent and the '213 patent to Zenith Radio Corporation. Hosiden will pay ITT the sum of $10,000 upon termination of this investigation. At the conclusion of the first 2 years of the agreement, Hosiden will pay a royalty of 3.75 percent of the total net invoice sales price of those switches sold within, or for use within, the United States. On August 11, 1981, the ALJ (Judge Duvall) recommended that the motion to terminate be granted and that the investigation be terminated as to all parties and all issues. The full text of these settlement agreements is available for public inspection at the Secretary's Office.

WRITTEN COMMENTS REQUESTED: In order to discharge its statutory obligation to consider the public interest, the Commission seeks written comments from interested persons regarding the effects of terminating this investigation on the basis of the settlement agreement on (1) the public health and welfare, (2) competitive conditions in the U.S. economy, (3) the production of like or directly competitive articles in the United States, and (4) U.S. consumers. All written comments must be filed with the Secretary to the Commission no later than 30 days after publication of this notice in the Federal Register. In addition, pursuant of 19 CFR § 210.14(a)(2), the Commission has requested comments from the Department of Health and Human Services, the Department of Justice, the Federal Trade Commission, and the U.S. Customs Service.

ADDITIONAL INFORMATION: The original and 19 copies of all written submissions must be filed with the Secretary to the Commission, 701 E Street NW., Washington, D.C. 20436, telephone (202) 523–0161. All comments must be filed no later than 30 days after publication of this notice in the Federal. Register Any person desiring to submit a document (or portion thereof) to the Commission in confidence must request *in camera* treatment. Such requests should be directed to the Secretary to the Commission and must include a full statement of the reasons the Commission should grant such treatment. The Commission will either accept the submission in confidence or return it. All nonconfidential written submissions will be available for public inspection at the Secretary's office.

FOR FURTHER INFORMATION CONTACT: Scott Daniels, Esq., Office of the General Counsel, U.S. International Trade Commission, 701 E Street NW., Washington, D.C. 20436; telephone (202) 523–0480.

By order of the Commission.

Issued: September 18, 1981.

KENNETH R. MASON,
Secretary.

(19 CFR 207.40)

Notice of Request for Public Comment on Termination of Countervailing Duty Investigation Concerning Die Presses From Italy

AGENCY: U.S. International Trade Commission.

ACTION: Request for comments on proposed termination of countervailing duty investigation under section 104(b) of the Trade Agreements Act of 1979.

FOR FURTHER INFORMATION CONTACT: Mr. Daniel Leahy, Office of Investigations, telephone 202–523–1369.

SUPPLEMENTARY INFORMATION: The Trade Agreements Act of 1979, subsection 104(b)(1), requires the Commission in the case of a countervailing duty order issued under section 303 of the Tariff Act of 1930, upon the request of a government or group of exporters of merchandise covered by the order, to conduct an investigation to determine whether an industry in the United States would be materially injured, or threatened with material injury, or whether the establishment of such industry would be materially retarded, if the order were to be revoked. On March 28, 1980, the Commission received a request from the Delegation of the Commission of the European Communities for the review of the countervailing duty order on die presses from Italy (T.D. 74–165).

The Commission received a letter on August 24, 1981, from Herman Schwabe, Inc., the original petitioner for the countervailing duty order, stating that "We hereby withdraw the countervailing duty petition regarding die presses from Italy (T.D. 74–165)."

The legislative history of section 704(a) of the Traiff Act of 1930, as amended by the Trade Agreements Act, indicates that the Commission should solicit public comment prior to termination of an investigation and approve the termination only if it is in the public interest. In light of the Commission's duty to consider the public interest, the Commission requests written comments from persons concerning the proposed termination of the investigation on die presses from Italy. These written comments must be filed with the Secretary to the Commission no later than 30 days after publication of this this notice in the Federal Register.

By order of the Commission.

Issued: September 14, 1981.

KENNETH R. MASON,
Secretary.

Index

U.S. Customs Service

	T.D. No.
Treasury decisions: Carriers bonds	81-255
Foreign currencies:	
Daily rates; September 14-17, 1981	81-257
Variances; September 14-17, 1981	81-258
Vessels in foreign and domestic trades	81-256

U.S. GOVERNMENT PRINTING OFFICE : 1981 O - 354-807

DEPARTMENT OF THE TREASURY
U.S. CUSTOMS SERVICE
WASHINGTON, D.C. 20229

OFFICIAL BUSINESS
PENALTY FOR PRIVATE USE, $300

POSTAGE AND FEES PAID
DEPARTMENT OF THE TREASURY (CUSTOMS)
(TREAS. 552)

15/42

Customs Bulletin

Regulations, Rulings, Decisions, and Notices concerning Customs and related matters

and Decisions

of the United States Court of Customs and Patent Appeals and the United States Court of International Trade

NEWARK PUBLIC LIBRARY

OCT 31 1981

U. S. GOVT. PUBS.
DEPOSITORY 376

Vol. 15 OCTOBER 21, 1981 No. 42

This issue contains

T.D. 81-259 Through 81-264
General Notice
Slip Op. 81-84
Protest Abstracts P81/156 Through P81/160
Reap. Abstracts R81/352 Through R81/362
Erratum
International Trade Commission Notices

THE DEPARTMENT OF THE TREASURY
U.S. Customs Service

T1.11/3:

NOTICE

The abstracts, rulings, and notices which are issued weekly by the U.S. Customs Service are subject to correction for typographical or other printing errors. Users may notify the U.S. Customs Service, Logistics Management Division, Washington, D.C. 20229, of any such errors in order that corrections may be made before the bound volumes are published.

For sale by the Superintendent of Documents, U.S. Government Printing Office, Washington, D.C. 20402. Price: $2.25 (single copy domestic); $2.85 (single copy foreign). Subscription price: $85.00 a year domestic; $106.25 a year foreign.

U.S. Customs Service

Treasury Decisions

(T.D. 81-259)

White or Irish Potatoes, Other Than Certified Seed—Tariff-Rate Quota

Tariff-rate quota for the quota year beginning September 15, 1981, for white or Irish potatoes, other than certified seed.

AGENCY: U.S. Customs Service, Department of the Treasury.

ACTION: Announcement of the quota quantity for white or Irish potatoes, other than certified seed, for the 12-month period beginning September 15, 1981.

SUMMARY: The tariff-rate quota for white or Irish potatoes, other than certified seed, pursuant to item 137.25, Tariff Schedules of the United States (TSUS), for the 12-month period beginning September 15, 1981, is 45 million pounds.

EFFECTIVE DATES: The 1981 tariff-rate quota is applicable to white or Irish potatoes described in item 137.25, TSUS, entered, or withdrawn from warehouse, for consumption during the 12-month period beginning September 15, 1981.

FOR FURTHER INFORMATION CONTACT:
Linda L. Mays, Acting Head, Quota Section, Duty Assessment Division, Office of Commercial Operations, U.S. Customs Service, Washington, D.C. 20229 (202-566-8592).

SUPPLEMENTARY INFORMATION: Each year the tariff-rate quota for potatoes described in item 137.25, TSUS, is based on the estimate by the Department of Agriculture of potatoes produced during the calendar year.

The estimate of the production of white or Irish potatoes including seed potatoes, in the United States for the calendar year 1981, made by the United States Department of Agriculture as of September 1, 1981, was in excess of 21 billion pounds.

In accordance with Headnote 2, Part 8A, of Schedule 1, Tariff

Schedules of the United States, the quota quantity is not increased because the estimated production is greater than 21 billion pounds.

(QUO-2-CO:T:D:SO)

Dated: Sept. 29, 1981.

WILLIAM T. ARCHEY,
Acting Commissioner of Customs.

[Published in the Federal Register, Oct.13, 1981 (46 FR 50457)]

(19 CFR Parts 132, 141, 142)

(T.D. 81-260)

Customs Regulations Relating to Quota Merchandise, Statistical Information, and Merchandise Released Under the Immediate Delivery Procedure

AGENCY: U.S. Customs Service, Department of the Treasury.

ACTION: Final rule.

SUMMARY: The "Customs Procedural Reform and Simplification Act of 1978," made significant changes in the Customs laws relating, in part, to the entry and warehousing of imported merchandise. Customs Regulations amendments implementing these changes were published; however, several sections of the Customs Regulations needed further changes. This document amends the Customs Regulations to:

(1) Clarify the procedure relating to quota merchandise when the quota is nearing fulfillment;
(2) Remove a mandatory requirement to aggregate statistical information from multiple invoices;
(3) Clarify the circumatances under which a district director may authorize release of merchandise from warehouse under a special permit; and
(4) Clarify what documentation may be filed after merchandise is released under the immediate delivery procedure.

EFFECTIVE DATE: November 9, 1981

FOR FURTHER INFORMATION CONTACT: Relating to quota merchandise—Bill Slyne, Duty Assessment Division, (202-566-2957); Relating to statistical information—William L. Marchi, Duty Assessment Division, (202-566-8235); Relating to merchandise released under the immediate delivery procedure—Benjamin H. Mahoney, Entry Procedures and Penalties Division, (202-566-5778). U.S. Customs Service, 1301 Constitution Avenue, NW., Washington, D.C. 20229.

SUPPLEMENTARY INFORMATION:

BACKGROUND

Pub. L. 95–410, the "Customs Procedural Reform and Simplification Act of 1978," made significant changes in the Customs laws relating, in part, to the entry and warehousing of imported merchandise. Final amendments to the Customs Regulations implimenting these changes were published in the Federal Register on August 9, 1979, as T.D. 79–221 (44 FR 46794).

Based upon our experience and further review, Customs determined that several sections of the Customs Regulations amended by T.D. 79–221 needed further changes. Accordingly, on December 30, 1980, Customs published a notice of proposed rulemaking (NPRM), in the Federal Register (45 FR 85781), to amend the following sections of the Customs Regulations (19 CFR Chapter 1):

1. Section 132.13(a)(1), Customs Regulations (19 CFR 132.13 (a)(1)), to clarify the procedure relating to quota merchandise when the quota is nearing fulfillment;

2. Sections 141.61(e)(1)(i) and (f)(2), Customs Regulations (19 CFR 141.61(e)(1)(i), (f)(2)), to remove a mandatory requirement to aggregate statistical information from multiple invoices;

3. Section 142.21(f), Customs Regulations (19 CFR 142.21(f)), to clarify the circumstances under which a district director may authorize release of merchandise from warehouse under a special permit; and

4. Section 142.22(b), Customs Regulations (19 CFR 142.22(b)), to clarify what documentation may be filed after merchandise is released under the immediate delivery procedure.

DISCUSSION OF CHANGES AS PROPOSED

Section 132.13(a)(1)

As amended by T.D. 79–221, the first sentence of section 132.13 (a)(1)(ii) provided that "Except in emergency cases, as provided for in section 142.21(e)(2) of this chapter, absolute quota merchandise shall not be released under this immediate delivery procedure if the quota is nearing fulfillment." To correct an inconsistency in the regulations, this sentence subsequently was amended by T.D. 80–26, published in the Federal Register on January 21, 1980 (45 FR 3901), to provide that "Absolute quota merchandise shall not be released under the immediate delivery procedure if the quota is nearing fulfillment."

A question of interpretation was raised as to whether absolute quota merchandise could be released under the immediate delivery

procedure if the quota were not nearing fulfillment. To clarify the point, the NPRM proposed to amend section 132.13(a)(1)(ii) to provide that except as provided for in section 142.21(e)(2) (relating to perishable merchandise of a class approved by Headquarters subject to an absolute quota) and section 142.21(g) (relating to release of merchandise when authorized by Headquarters), absolute quota merchandise shall not be released under the immediate delivery procedure.

Section 132.12, Customs Regulations, relating to the opening of potentially filled quotas, provides a procedure in paragraph (c)(2) to be used in the event quantities specified on entry summaries for consumption or withdrawals for consumption shall be prorated against the quota quantity.

The NPRM further proposed to amend section 132.13(a)(1) by deleting the last sentence of section 132.13(a)(1)(ii) and by adding a new section 132.13(a)(1)(iii) to provide that the procedure set forth under section 132.13(c)(2), relating to the opening of potentially filled quotas, also applies to tariff and absolute quota when the quota is nearing fulfillment.

Section 141.61(e)(1)(i) and (f)(2)

Section 141.61(e)(1)(i), as amended by T.D. 79–221, provided that if a class or kind of merchandise form the same country of origin subject to the same statistical reporting number is included in more than one invoice, the information shall be combined and reported under one statistical reporting number. That section also provided that when consolidating information from several invoices under one reporting number, a worksheet itemizing the entered value of the merchandise from each invoice shall be attached to the appropriate form.

Section 141.61(f)(2), as amended by T.D. 79–221, relating to values on multiple invoices, required that the aggregate of the entered values of all the merchandise on each of the multiple invoices be shown on an attached worksheet.

The procedures relating to aggregating statistical information were proposed initially to reduce the loss of statistical data because detailed information on line items of the Traiff Schedules of United States Annotated (TSUSA) valued under $250 was not reported. By combining data under one TSUSA number, many line items valued under $250 could be included in the detailed data. Additionally, many TSUSA line items on Customs entry summaries could be eliminated, thus realizing significant savings in computer processing time.

The effective date of implementing these sections was September 10, 1979. However, after publication of T.D. 79–221 on August 9, 1979, a number of individual customhouse brokers, their trade association, and other interested parties advised Customs of serious problems and burdens they were experiencing in attempting to establish procedures to comply with the new regulations.

After reviewing the matter, Customs found there was merit to these complaints. Accordingly, a notice was published in the Federal Register as T.D. 79–248 on September 24, 1979 (44 FR 55001), delaying implementation of sections 141.61(e)(1)(i) and (f)(2), to January 1, 1980. Subsequently, on October 26, 1979, Customs field personnel were directed by Customs Headquarters to advise importers, brokers, and other interested parties that there would be an indefinite delay in implementing these sections.

Customs determined that the problems and financial burden that the new requirements would impose on certain segments of the importing public outweighed the benefits to be gained in reducing processing costs and time, and providing more complete statistical data.

On the other hand, some importers and nonautomated brokers preferred to aggregate the TSUSA number. A practice has been established in many locations to permit entry summaries to be filed in this manner.

Therefore, Customs determined to permit importers and brokers, at their option, to either:

1. Aggregate the TSUSA number regardless of the number of invoices involved; or
2. List the TSUSA number within each invoice.

The NPRM proposed to amend sections 141.61(e)(1)(i) and (f)(2) to provide that the broker and importer may use either procedure.

Section 142.21(f)

Section 142.21(f), as amended by T.D. 79–221, provided that at the discretion of the district director, merchandise may be released from a warehouse under a special permit provided the importer has on file one of the types of Customs bonds provided for in section 142.4, Customs Regulations (19 CFR 142.4).

The purpose of this provision is to avoid unnecessary delay in releasing merchandise from a bonded warehouse when an importer must travel a great distance from (1) the bonded warehouse to the customhouse to file the withdrawal for consumption with estimated duties attached, and (2) the customhouse to the bonded warehouse to obtain release of the merchandise.

Under section 142.21(f), an importer may obtain prompt release of merchandise from a bonded warehouse by filing Customs Form 3461. The importer may accumulate several of these forms over a period of days and then make one trip to the customhouse within the required 10-day period to file the withdrawal for consumption with estimated duties attached.

However, it appears that some importers, who do not travel great distances between their bonded warehouses and the customhouse and, therefore, can obtain prompt release of merchandise from the warehouse, may take advantage of the benefit of section 142.21(f) merely to forestall the payment of estimated duties until 10 days after release of the merchandise from the bonded warehouse.

The NPRM proposed to amend section 142.21(f) to ensure that the procedure will not be used by some importers merely to delay payment of estimated duties. It was proposed to amend section 142.21 (f) to provide that the district director may authorize release from warehouse under a special permit under the following circumstances:

1. The warehouse is located a considerable distance from the customhouse and actual release of the merchandise from the warehouse could not be effected within the next full business day after the day of the payment of duty, and
2. The district has sufficient manpower to permit such practice.

Section 142.22(b)

Section 142.21, as amended by T.D. 79–221, provides that merchandise may be released under a special permit for immediate delivery, in accordance with section 448(b), Tariff Act of 1930, as amended (19 U.S.C. 1448(b)), under circumstances relating to the following:

1. Contiguous countries,
2. Fresh fruits and vegetables,
3. Agency of the U.S. Government,
4. Articles of a trade fair,
5. Quota-class merchandise,
6. Release from warehouse followed by warehouse withdrawal for consumption, and
7. When authorized by Headquarters.

Section 142.22(b) lists the documentation which must be filed after the release of merchandise for which a special permit for immediate delivery had been issued. They are:

1. An entry summary for consumption, with estimated duties attached, and entry summary for warehouse, or an entry summary for entry under a temporary bond;
2. A withdrawal for consumption, with estimated duties attached;

3. An entry for transportation and exportation, immediate transportation without appraisement, or direct exportation; or
4. An application to destroy.

Section 142.28, Customs Regulations (19 CFR 142.28), provides, in part, that an entry for exportation, or for transportation and exportation, or an application to destroy, may be filed for merchandise released under a special permit for immediate delivery and later found to be prohibited.

A question of interpretation was raised by Customs personnel as to under what circumstances, relating to the release of merchandise under the immediate delivery procedure of section 142.21, would the transportation entries specified in section 142.22(b)(3) be used. Transportation entries may be used only with respect to the release of fresh fruits and vegetables under section 142.21(b) and absolute quota merchandise under section 142.21(e)(2). However, section 142.22(b)(3) did not set forth these two circumstances under which the transportation entries may be used. Therefore, an ambiguity was raised concerning the proper document to be used.

In a related matter, section 142.28 provides for the use of an entry for exportation, or for transportation and exportation, or an application to destroy merchandise released and later found to be prohibited. However, neither section 142.22(b)(3) nor section 142.22(b)(4) made any reference to merchandise released under the immediate delivery procedure and later found to be prohibited. An ambiguity also was raised with regard to the proper documents to be used.

The NPRM proposed to amend section 142.22(b)(3) to provide that the transportation entries shall be filed only in the circumstances under sections 142.21 (b) and (e)(2), and to provide that an entry for exportation, or for transportation and exportation, shall be filed in the circumstance under section 142.28.

Similarly, that document proposed to amend section 142.22(b)(4) to provide that an application to destroy shall be filed in the circumstances under section 142.21 (b) and (e)(2), and section 142.28.

Two additional changes to section 142.22(b) were proposed. It was proposed to amend section 142.22(b)(1) to clarify that the entry summary documents may be filed in any of the circumstances listed in section 142.21 except for merchandise released from warehouse under section 142.21(f). It was proposed to amend section 142.22(b)(2) to clarify that a withdrawal for consumption shall be filed only for merchandise released from warehouse under section 142.21(f).

Pursuant to the NPRM, interested parties were given until March 2, 1981, to submit comments on the proposal. Five commenters responded to the notice. Except for one clarifying change, the amendments are being adopted as proposed.

DISCUSSION OF COMMENTS

One commenter requests Customs to clarify and simplify its procedures to relieve congestion of air carrier terminals at various international airports. Because this suggestion is outside the scope of the proposed rule, Customs will not consider the comment as part of this document. However, as part of our continuing effort to improve operations, Customs will endeavor to clarify and simplify procedures wherever possible.

Several commenters object to amending section 132.13(a)(1)(ii), relating to quota merchandise. One commenter believes that prohibiting the release of absolute quota merchandise under the immediate delivery procedure if the quota were not nearing fulfillment would create an obstacle to the importing community. It is claimed that pier and rail demurrage costs would result because quota entries could not be processed by Customs timely. Another commenter believes that the regulations should allow all absolute quota merchandise to be released under normal entry procedures.

As noted in the proposal, this is not a new concept but merely a clarification of the existing procedure for regulating the release of absolute quota merchandise under the immediate delivery procedure, whether or not a quota is nearing fulfillment. The purpose of the rule is to assure that section 132.13(a)(1)(ii) is read consistently with section 142.21, relating to the immediate delivery procedure. The uniform procedure of restricting release of absolute quota merchandise under the immediate delivery procedure is necessary for Customs to maintain quantitative control of the merchandise. Accordingly, the rule is being adopted as proposed.

Concerning the proposed amendments to sections 141.61 (e)(1)(i) and (f)(2), relating to statistical information, one commenter indicates that there are many cases when merchandise having the same statistical reporting number is reported separately. The commenter suggests that the regulations provide that an importer, at his option or when required because of licensing or requirements of other government agencies, may report the same statistical reporting number as often as necessary.

Customs is not aware of requirements that merchandise subject to the same statistical reporting number must be reported separately on the Customs entry summary document. We believe that adoption of the suggestion would result in an increase in the number of tariff line items that must be processed. This would necessarily increase the statistical data processing costs. Customs does not favor allowing merchandise on one invoice subject to the same 7-digit TSUSA

best copy available

reporting number to be entered on the entry summary more than once. Accordingly, the amendment is being adopted as proposed. An importer, at his option, may enter the same 7-digit number once for each invoice, or combine and report the same number once on the entry summary for all the merchandise subject to classification under that number from all invoices.

Several commenters object to the proposed amendment to section 142.21(f), relating to the release of merchandise from warehouse under a special permit. One commenter states that the phrase "considerable distance from the customhouse" in proposed section 142.21 (f)(1)(i) is too broad and would be subject to misinterpretation. The commenter suggests that the phrase "outside of the official limitations of the city in which the Customs House is located" be used. Customs disagrees with the suggestion because if adopted, it would tend to work to the disadvantage of an importer having a warehouse in a city encompassing large geographical boundaries. Customs believes the proposed language is satisfactory.

Two commenters object to the language of that portion of proposed section 142.21(f)(1)(i) relating to the time of actual release of the merchandise from the warehouse. One commenter claims that it is unlikely that actual release of the merchandise from the warehouse "could" be completed within the next full business day because there is no present procedure under which Customs notifies the importer that the forms are available for pickup at the customhouse. Furthermore, if mail service were used, notice would not reach the importer for several days. The commenter notes that the only way in which an importer could ascertain the status of the forms submitted for withdrawal of the merchandise would be to travel each day to the customhouse. Economically, this would be very expensive. The second commenter notes that depending upon the reliability of the mail and availability of private transportation, release could be made within a span of one to three days.

Customs believes these concerns have merit and seeks to minimize any economic hardships upon the importer and avoid delay in processing paperwork. To clarify this matter, the word "may" is being substituted for the word "could" in proposed section 142.21(f)(1)(i).

Two commenters made suggestions to facilitate the release of merchandise from warehouse including using the procedure similar to the entry procedure currently in effect. Because these suggestions appear to be beyond the scope of the proposed rule they will not be considered as part of this document. However, Customs will consider these comments as part of its review of warehouse operation.

INAPPLICABILITY OF REGULATORY FLEXIBILITY ACT

This document is not subject to the provisions of sections 603 and 604 of Title 5, United States Code (as added by section 3 of Pub. L. 96-354, the "Regulatory Flexibility Act") because it was the subject of a notice of proposed rulemaking issued before January 1, 1981, the effective date of the Act.

E.O. 12291

This document does not meet the criteria for a "major rule" as specified in section 1(b) of E.O. 12291. Accordingly, no regulatory impact analysis has been prepared.

DRAFTING INFORMATION

The principal author of this document was Charles D. Ressin, Regulations Branch, Office of Regulations and Rulings, U.S. Customs Service. However, personnel from other Customs offices participated in its development.

AMENDMENT TO THE REGULATIONS

Parts 132, 141, and 142, Customs Regulations (19 CFR 132, 141, and 142), are amended as set forth below.

WILLIAM T. ARCHEY,
Acting Commissioner of Customs.

Approved: September 2, 1981.

JOHN P. SIMPSON,
Acting Assistant Secretary of Treasury.

[Published in the Federal Register, Oct. 8, 1981 (46 FR 49838)]

PART 132—QUOTAS

1. The first sentence of § 132.13(a)(1)(ii) is revised to read as follows:

§ 132.13 Quotas after opening.

(a) *Procedure when nearing fulfillment.*—(1) *For release of merchandise.*

* * * * * * *

(ii) *Absolute.* Except as provided for in § 142.21 (e)(2) and (g) of this chapter, absolute quota merchandise shall not be released under the immediate delivery procedure.

2. The last sentence of § 132.13(a)(1)(ii) is removed.

3. A new § 132.13(a)(1)(iii) is added to read as follows:

§ 132.13 Quotas after opening.

(a) *Procedure when nearing fulfillment.*—(1) *For release of merchandise.* * * *

(iii) *Quota Proration.* When it is determined that entry summaries for consumption or withdrawals for consumption must be amended to permit only the quantity of tariff-rate and absolute quota merchandise determined to be within the quota, the entry summaries for consumption or withdrawals for consumption must be returned to the importer for adjustment. The time of presentation for quota purposes in that event shall be the same as the time of the initial presentation of the entry summaries for consumption or withdrawals for consumption provided—

(A) An adjusted entry summary for consumption, or withdrawals for consumption, with estimated duties attached, is deposited within 5 working days after Headquarters authorizes release of the merchandise, and

(B) The importer takes delivery of the merchandise within 15 working days after release is authorized.

* * * * * * *

PART 141—ENTRY OF MERCHANDISE

1. § 141.61(e)(1)(i) is revised to read as follows:

§ 141.61 Completion of entry and entry summary documentation.

* * * * * * *

(e) *Statistical information*—(1) *Information required on entry summary or withdrawal form*—(i) *Where form provides space*—(A) *Single invoice.* For each class or kind of merchandise subject to a separate statistical reporting number, the applicable information required by the General Statistical Headnotes, Tariff Schedules of the United States Annotated ("TSUSA"), shall be shown on the appraisement entry, Customs Form 7500; the entry summary, Customs Form 7501 or 7502; the transportation entry and manifest of goods, Customs Form 7512, when used to document an incoming vessel shipment proceeding to a third country by means of an entry for transportation and exportation, or immediate exportation; the rewarehouse entry, Customs Form 7519; the manufacturing warehouse entry, Customs Form 7521; the withdrawal form, Customs Form 7505 or 7506; or the record of vessel/aircraft foreign repair or equipment purchase, Customs Form 226, in the space provided.

(B) *Multiple invoices.* If a class or kind of merchandise from the same country of origin subject to the same statistical reporting number is included in more than one invoice, the importer may, at his option (1) list each invoice separately on the appropriate form listed under paragraph (e)(1)(i)(A) of this section and for each class or kind of merchandise within each invoice subject to a separate statistical reporting number, report the applicable information required by the

354-808 O - 81 - 2

General Statistical Headnotes, Tariff Schedules of the United States Annotated (TSUSA); or (2) combine the information for each class or kind of merchandise and report it under one statistical reporting number for all invoices. When consolidating information from several invoices under one reporting number, a worksheet itemizing the entered value of the merchandise from each invoice in the manner prescribed in paragraph (f)(2)(ii) of this section shall be attached to the appropriate form.

* * * * * * *

§141.61 [Amended]

2. §141.61(f)(2); is revised to read as follows:

* * * * * * *

(f) *Value of each invoice.* (1) * * *

(2) *Multiple invoices.* (i) If the importer or his agent elects the first option specified im paragraph (e)(1)(i)(B) of this section, the information required to be restated by paragraph (f)(1) of this section for a single invoice shall be restated for each invoice. The required information shall be shown on a worksheet attached to the form or placed across columns (2a) or (2b) on Customs Form 7501 and 7502, and in the same general location on Customs Forms 7505, 7506, 7519, and 7521.

(ii) If the importer or his agent elects the second option specified in paragraph (e)(1)(i)(B) of this section, the information required to be restated by paragraph (f)(1) of this section for a single invoice shall be restated for each invoice. The final amount in the summary computation shall represent the aggregate of the entered values of all the merchandise on each of the multiple invoices. The required information shall be shown on an attached worksheet.

(iii) The worksheet also shall contain:

(A) A statistical reporting number restatement for the merchandise from each invoice subject to the same statistical reporting number from the same country of origin, and

(B) An aggregate total value which represents the entered value.

(iv) To permit the identification of the merchandise entered under each reporting number, each class or kind of merchandise from one country reported under a single statistical reporting number shall be coded identically on each invoice and on the worksheet.

PART 142—ENTRY PROCESS

1. §142.21(f) is revised to read as follows:

§142.21 Merchandise eligible for special permit for immediate delivery.

* * * * * * *

(f) *Release from warehouse followed by warehouse withdrawal for consumption.* Merchandise may be released from warehouse under a special permit—

(1) At the discretion of the district director when

(i) The warehouse is located a considerable distance from the customhouse and actual release of the merchandise from the warehouse may not be effected within the next full business day after the day of the payment of duty, and (ii) The district has sufficient manpower to permit such practice;

(2) The importer shall have on file one of the types of Customs bonds provided for in § 142.4; and

(3) The immediate delivery permit shall be annotated to state that a warehouse withdrawal for consumption will be filed for this merchandise.

* * * * * * *

2. § 142.22(b) is revised to read as follows:

§ 142.22 Application for special permit for immediate delivery.

(a) * * *

(b) *Customs custody.* Merchandise for which a special permit for immediate delivery has been issued under § 142.21 shall be considered to remain in Customs custody until the filing of one of the following:

(1) An entry summary for consumption, with estimated duties attached, an entry summary for warehouse, or an entry summary for entry under a temporary importation bond, which may be filed in any of the circumstances under § 142.21 except for merchandise released from warehouse under § 142.21(f);

(2) A withdrawal for consumption, with estimated duties attached, which shall be filed only for merchandise released from warehouse under § 142.21(f);

(3) An entry for transportation and exportation, immediate transportation without appraisement, or direct exportation, which shall be filed in those circumstances under § 142.21(b) and (e)(2); or entry for transportation and exportation, or direct exportation, which shall be filed in the circumstances under § 142.28 or

(4) An application to destroy, which shall be filed in those circumstances under §§ 142.21(b) and(e)(2), and § 142.28.

(R.S. 251, as amended (19 U.S.C. 66), sec. 484, 552, 553, 557, 624, 46 Stat. 722, as amended, 742, as amended, 744, as amended, 759, (19 U.S.C. 1484, 1552, 1553,1557, 1624); 92 Stat. 888)

[Pub. L. 95–410 October 3, 1978]

(19 CFR Part 4)

(T.D. 81-261)

Special Tonnage Tax and Light Money

AGENCY: U.S. Customs Service, Department of the Treasury.

ACTION: Final rule.

SUMMARY: This rule amends the Customs Regulations by adding Dominica to the list of nations whose vessels are exempted from the payment of higher tonnage duties than are applicable to vessels of the United States and from the payment of light money. Satisfactory evidence has been furnished by the Department of State that no discriminating duties of tonnage or impost are imposed in ports of Dominica upon vessels belonging to citizens of the United States or on their cargoes. This document provides reciprocal privileges to vessels registered in Dominica.

EFFECTIVE DATE: June 15, 1981.

FOR FURTHER INFORMATION CONTACT: Michael Tomenga, carriers, Drawback and Bonds Division, U.S. Customs Service, 1301 Constitution Avenue, NW., Washington, D.C. 20229 (202-566-5706).

SUPPLEMENTARY INFORMATION:

BACKGROUND

Generally, the United States imposes regular and special tonnage taxes, and a duty of a specified amount per ton, known as "light money," on all foreign vessels which enter Uuited States ports (46 U.S.C. 121, 128). However, vessels of a foreign nation may be exempted from the payment of special tonnage taxes and light money upon presentation of proof satisfactory to the President that no discriminatory duties of tonnage or imposts are imposed by that foreign nation on United States vessels or their cargoes (46 U.S.C. 141). The President has delegated the authority to grant this exemption to the Secretary of the Treasury. Section 4.22, Customs Regulations (19 CFR 4.22), lists those nations whose vessels have been exempted from the payment of any higher tonnage duties than are applicable to vessels of the United States and from the payment of light money.

On June 15, 1981, the Department of State advised the Department of the Treasury that satisfactory evidence had been obtained from the Government of Dominica that no discriminating duties of tonnage or impost are imposed or levied in ports of that country upon vessels wholly belonging to citizens of the United States, or upon the produce,

manufactures, or merchandise imported into that country on United States vessels.

In its communication, the Department of State advised that no discriminating duties of tonnage or impost were imposed or levied upon vessels wholly belonging to citizens of the United States, or upon the produce, manufactures, or merchandise imported into ports of the Dominica from June 15, 1981.

DECLARATION

Therefore, by virtue of the authority vested in the President by section 4228 of the Revised Statutes, as amended (46 U.S.C. 141), and delegated to the Secretary of the Treasury by Executive Order No. 10289, September 17,1951, as amended by Executive Order No. 10882, July 18, 1960 (3 CFR, 1959–1963 Comp., Ch. II), and pursuant to the authorization provided by Treasury Department Order No. 101–5 (46 FR 9336), I declare that the Foreign discriminating duties of tonnage and impost within the United States are suspended and discontinued, in respect to vessels of Dominica and the produce, manufactures, or merchandise imported into the United States in such vessels from Dominica or from any other foreign country.

This suspension and discontinuance shall take effect from June 15, 1981, in respect to vessels of Dominica, and shall continue only for so long as the reciprocal exemptions of vessels wholly belonging to citizens of the United States and their cargoes shall be continued.

AMENDMENT TO THE REGULATIONS

To reflect the reciprocal privileges granted to vessels registered in Dominica, the list in section 4.22, Customs Regulations (19 CFR 4.22), of nations whose vessels are exempted from the payment of any higher tonnage duties than are applicable to vessels of the United States and from the payment of light money, is amended by adding Dominica in appropriate alphabetical order.

(R.S. 251, as amended, 4219, as amended, 4255, as amended, 4228, as amended, sec. 3, 23 Stat. 119, as amended, sec. 624, 46 Stat. 759 (19 U.S.C. 66, 1624, 46 U.S.C. 5, 121, 128, 141))

INAPPLICABILITY OF PUBLIC NOTICE AND DELAYED EFFECTIVE DATE REQUIREMENTS

Because this amendment merely implements a statutory requirement and involves a matter in which the public is not particularly interested, pursuant to 5 U.S.C. 553(b)(B), notice and public procedure thereon are unnecessary. Further, for the same reasons,

good cause exists for dispensing with a delayed effective date under 5 U.S.C. 553(d)(1).

INAPPLICABILITY OF REGULATORY FLEXIBILITY ACT

This document is not subject to the provisions of sections 603 and 604 of title 5, United States Code, as added by section 3 of Pub. L. 96–354, the "Regulatory Flexibility Act." That Act does not apply to any regulation such as this for which a notice of proposed rulemaking is not required by the Administrative Procedure Act (5 U.S.C. 551 *et seq.*) or any other statute.

EXECUTIVE ORDER 12291

This amendment does not meet the criteria for a major regulation as defined in section 1(b) of E.O. 12291. Accordingly, a regulatory impact analysis is not required.

DRAFTING INFORMATION

The principal author of this document was Barbara E. Whiting, Regulations Control Branch, Office of Regulations and Rulings, U.S. Customs Service. However, personnel from other offices of the Customs Service and the Departments of State and Treasury participated in its development.

Dated: September 2, 1981.

JOHN P. SIMPSON,
Acting Assistant Secretary of the Treasury.

[Published in the Federal Register, October 8, 1981 (46 FR 49837)]

(T.D. 81-262)

Bonds

Approval and discontinuance of consolidated aircraft bonds (air carrier blanket bonds), Customs Form 7605

The following consolidated aircraft bonds have been approved or discontinued as shown below. The symbol "D" indicates that the bond previously outstanding has been discontinued on the month, day, and year represented by the figures which follow. "PB" refers to a previous bond, dated as represented by the figures in parentheses immediately following, which has been discontinued. If the previous bond was in the name of a different company or if the surety was different, the information is shown in a footnote at the end of the list.

Dated: October 1, 1981.

Name of principal and surety	Date term commences	Date of approval	Filed with district directo /area director/amount
Saudi Arabian Airlines Corp., 747 Third Ave., 29th Floor, New York, NY; The Travelers Indemnity Co.	Aug. 6, 1981	Sept. 17, 1981	St. Louis, MO $100,000

The foregoing principal has been designated as a carrier of bonded merchandise.

BON-3-01

GEORGE C. STEUART,
(For Marilyn G. Morrison, Director,
Carriers, Drawback and Bonds Division).

(T.D. 81-263)

Foreign Currencies—Daily Rates for Countries Not on Quarterly List

The Federal Reserve Bank of New York, pursuant to section 522(c), Tariff Act of 1930, as amended (31 U.S.C. 372(c)), has certified buying rates for the dates and foreign currencies shown below. The rates of exchange, based on these buying rates, are published for the information and use of Customs officers and others concerned pursuant to Part 159, Subpart C, Customs Regulations (19 CFR 159, Subpart C).

Argentina peso:	
September 21-24, 1981	$0.000178
September 25, 1981	.000175
Chile peso:	
September 21-25, 1981	$0.025575
Colombia peso:	
September 21-24, 1981	$0.017889
September 25, 1981	.017762
Greece drachma:	
September 21, 1981	$0.018182
September 22, 1981	.017825
September 23, 1981	.017746
September 24, 1981	.017422
September 25, 1981	.017575
Indonesia rupiah:	
September 21-25, 1981	$0.001582

Israel shekel:	
September 21, 1981	$0.075873
September 22-23, 1981	.075930
September 24, 1981	.075131
September 25, 1981	.074850
Peru sol:	
September 21-25, 1981	$0.002257
September 25, 1981	.002212

(LIQ-01-03 O:C:E)

Dated: September 24, 1981.

KENNETH A. RICH,
Acting Chief,
Customs Information Exchange.

(T.D. 81-264)

Foreign Currencies—Variances From Quarterly Rate

The following rates of exchange are based upon rates certified to the Secretary of the Treasury by the Federal Reserve Bank of New York, pursuant to Section 522(C), Tariff Act of 1930, as amended (31 U.S.C. 372(c)), and reflect variances of 5 per centum or more from the quarterly rate published in Treasury Decision 81-183 for the following countries. Therefore, as to entries covering merchandise exported on the dates listed, whenever it is necessary for Customs purposes to convert such currency into currency of the United States, conversion shall be at the following rates.

Austria schilling:	
September 21, 1981	$0.063492
September 22, 1981	.062500
September 23, 1981	.062228
September 24-25, 1981	Quarterly
Belgium franc:	
September 21, 1981	$0.027420
September 22, 1981	.026903
September 23, 1981	.026681
September 24-25, 1981	Quarterly
Brazil cruziero:	
September 21-25, 1981	$0.009388

Denmark krone:	
September 21, 1981	$0.141945
September 22, 1981	.139567
September 23, 1981	.138793
September 24–25, 1981	Quarterly
France franc:	
September 21, 1981	$0.189107
September 22, 1981	.184672
September 23–25, 1981	Quarterly
Germany deuches mark:	
September 21, 1981	$0.448430
September 22, 1981	.438212
September 23–25, 1981	Quarterly
Hong Kong dollar:	
September 21, 1981	$0.166528
September 22, 1981	.164948
September 22, 1981	.163586
September 24, 1981	.162602
September 25, 1981	.163800
India rupee:	
September 21–22, 1981	$0.109769
September 23, 1981	.109529
September 24, 1981	.108225
September 25, 1981	.108460
Ireland pound:	
September 21, 1981	$1.6320
September 21, 1981	1.6000
September 23–25, 1981	Quarterly
Italy lira:	
September 22, 1981	$0.000882
September 23–25, 1981	Quarterly
Netherlands guilder:	
September 21, 1981	$0.404204
September 22, 1981	.394945
September 23–25, 1981	Quarterly
Republic of South Africa rand:	
September 21–23, 1981	Quarterly
September 24, 1981	$1.0530
September 25, 1981	$1.0545
Sri Lanka rupee:	
September 21–24, 1981	$0.049092
September 25, 1981	.048792

354-808 O - 81 - 3

Sweden krone:	
September 21, 1981	$0. 183993
September 22, 1981	. 181719
September 23, 1981	. 180343
September 24-25, 1981	. 179051
Switzerland franc:	
September 21, 1981	$0. 524384
September 22, 1981	. 510204
September 23, 1981	. 509165
September 24, 1981	. 506329
September 25, 1981	Quarterly
Thailand baht (tical):	
September 21-25, 1981	$0. 043384
United Kingdom pound:	
September 21-23, 1981	Quarterly
September 24, 1981	$1. 7885
September 25, 1981	1. 7855

LIQ-03-01 O:C:E

Dated: September 24, 1981.

KENNETH A. RICH,
Acting Chief,
Customs Information Exchange.

U.S. Customs Service

General Notice

(19 CFR Parts 24, 111, 141)

Proposed Customs Regulations Amendments Relating to Discharge of an Importer's Liability for Duties; Extension of Time for Public Comment

AGENCY: U.S. Customs Service, Department of the Treasury.

ACTION: Notice of extension of time for comments.

SUMMARY: This notice extends the period of time within which interested members of the public may submit comments with respect to a proposal to amend Parts 24, 111, and 141, Customs Regulations (19 CFR Parts 24, 111, 141), relating to the discharge of an importer's liability for duties. A document inviting the public to comment on this proposal was published in the Federal Register on September 3, 1981 (46 FR 44195). Comments were to have been received on or before November 2, 1981. A request has been received to extend the period of time for the submission of comments. The notice extends the period of time to December 2, 1981.

DATE: Comments must be received on or before December 2, 1981.

ADDRESS: Written comments (preferably in triplicate) may be addressed to the Commissioner of Customs, Attention: Regulations Control Branch, U.S. Customs Service, 1301 Constitution Avenue, NW., Room 2426, Washington, D.C. 20229.

FOR FURTHER INFORMATION CONTACT: Edward B. Gable, Jr., Office of Regulations and Rulings (202–566–5706), U.S. Customs Service, 1301 Constitution Avenue, NW., Washington, D.C. 20229.

Dated: October 6, 1981.

DONALD W. LEWIS,
Director, Office of Regulations and Rulings.

[Published in the Federal Register, October 13, 1981 (46 FR 50393)]

United States Court of International Trade

One Federal Plaza
New York, N.Y. 10007

Chief Judge

Edward D. Re

Judges

Paul R. Rao
Morgan Ford
Scovel Richardson
Frederick Landis
James L. Watson
Herbert N. Maletz
Bernard Newman
Nils A. Boe

Senior Judge

Samuel M. Rosenstein

Clerk

Joseph E. Lombardi

Decisions of the United States Court of International Trade

(Slip Op. 81–84)

EISEMAN-LUDMAR CO., INC., PLAINTIFF *v.* THE UNITED STATES, DEFENDANT

Court No. 76–1–00117

Before BOE, *Judge.*

MEMORANDUM OPINION AND ORDER

[Order denying motion for rehearing.]

(Dated September 21, 1981)

Fitch, King & Caffentzis (*Richard C. King* on the brief) for the plaintiff.

Stuart E. Schiffer, Acting Assistant Attorney General; *Joseph I. Liebman*, Attorney in Charge, International Trade Field Office, Commercial Litigation Branch (*Robert H. White* on the brief), for the defendant.

BOE, *Judge:* With respect to the decision and judgment of this court in the above-entitled action entered on July 28, 1981, the plaintiff seeks, pursuant to rule 59 of this court, a rehearing "* * * and a reconsideration of the evidence and applicable principles of the law to be applied to the evidence."

In the case of *W. J. Byrnes & Co., Inc.* v. *United States*, 68 Cust. Ct. 358, C.R.D. 72-5 (1972), the United States Customs Court through Judge Watson has succinctly stated:

> A rehearing may be proper when there has been some error or irregularity in the trial, a serious evidentiary flaw, a discovery of important new evidence which was not available, even to the diligent party, at the time of trial, or an occurrence at trial in the nature of an accident or unpredictable surprise or unavoidable mistake which severely impaired a party's ability to adequately present its case. In short, a rehearing is a method of rectifying a significant flaw in the conduct of the original proceeding.

The grounds upon which the plaintiff predicates its motion, indeed, possess none of the criteria upon which rehearings have been granted in suits in equity in the courts of the United States. In sum, the plaintiff, advancing the same arguments as presented to this court in its memorandum brief in the trial of the instant action, presently seeks to have this court in reconsidering its decision and judgment herein construe the evidence and testimony presented at the trial of the within action in the identical manner as interpreted by the plaintiff. An allegedly incorrect evaluation of evidence by a trial court is not a proper ground for rehearing but for appeal.

Plaintiff's alternative request contained in its motion that the instant action be reopened "* * * for the taking of additional testimony to confirm plaintiff's above analysis of the evidence of record on the known uses of manchons * * *" only serves to confirm this court's opinion with respect to the inadequacy of plaintiff's evidence to sustain its dual burden of proof. Neither party hereto can be said to have been "precipitously rushed" into the trial arena. After four years following the joinder of issue in the instant action, after repeated directives by the court to proceed to trial and after numerous extensions of time granted to each party litigant, a request for the reopening of the instant action for the purpose of taking additional testimony in an attempt to confirm a litigant's interpretation of the evidence presented during the full prior trial thereof, indeed, does not serve to add luster to our judicial system.

The motion of the plaintiff, accordingly, be and is hereby denied.

Decisions of the United States Court of International Trade

Abstracts

Abstracted Protest Decisions

DEPARTMENT OF THE TREASURY, *September 28, 1981.*

The following abstracts of decisions of the United States Court of International Trade at New York are published for the information and guidance of officers of the Customs and others concerned. Although the decisions are not of sufficient general interest to print in full, the summary herein given will be of assistance to Customs officials in easily locating cases and tracing important facts.

WILLIAM VON RAAB,
Commissioner of Customs.

DECISION NUMBER	JUDGE & DATE OF DECISION	PLAINTIFF	COURT NO.	ASSESSED	HELD	BASIS	PORT OF ENTRY AND MERCHANDISE
				Par. or Item No. and Rate	Par. or Item No. and Rate		
I'81/156	Watson, J. September 21, 1981	F. W. Myers & Co., Inc.	78-7-01265	Item 409.00 3.5¢ per lb. +22.5%	Item 432.00 5%	F. W. Myers & Co., Inc. v. U.S. (C.D. 4876)	Port Huron Herbicide known as "Sencor 50% Wettable Powder"

P81/157	Maletz, J. September 21, 1981	Border Brokerage Co., Inc.	78-1-00558, etc.	Item 680.22 11%	Item 680.27 5%	Agreed statement of facts	Blaine (Seattle) Valves or devices used to control the flow of liquids
P81/154	Maletz, J. September 22, 1981	International Seaway Trading Corp.	67/79077, etc.	Item 700.60 20%	Item 700.70 15%, 13%, 12%, 10%, 9%, or 7.5%	International Seaway Trading Corp. v. U.S. (C.D. 4773)	Baltimore Footwear which have rubber soles which contain iron powder fillers
P81/159	Newman, J. September 22, 1981	Stoner and Downer	80-1-00139	Item 608.52 10.5%, plus additional duties under items 607.01 and 607.02 on chromium and molybdenum content	Item 609.82 2% + 0.1¢ per lb., plus additional duties, *supra*	Overton & Co. v. U.S. (C.D. 4875)	Boston Hot rolled, sectional steel shapes, alloyed; not annealed, drilled, punched, nor otherwise advanced
P81/160	Newman, J. September 22, 1981	Wetherell Brothers Inc.	80-1-00138	Item 608.52 10.5%, plus additional duties under items 607.01 and 607.02 on chromium and molybdenum content	Item 609.82 2% + 0.1¢ per lb., plus additional duties, *supra*	Overton & Co. v. U.S. (C.D. 4875)	Boston Hot rolled, sectional steel shapes, alloyed; not annealed, drilled, punched, nor otherwise advanced

Decisions of the United States Court of International Trade

Abstracts

Abstracted Reappraisement Decisions

DECISION NUMBER	JUDGE & DATE OF DECISION	PLAINTIFF	COURT NO.	BASIS OF VALUATION	HELD VALUE	BASIS	PORT OF ENTRY AND MERCHANDISE
R81/352	Re, C.J. September 21, 1981	Marco Polo Imports Ltd.	74-5-01533	Export value	Appraised values shown on entry papers less additions included to reflect currency revaluation.	C.B.S. Imports Corp. v. U.S. (C.D. 4730)	New York Miscellaneous articles
R81/353	Re, C.J. September 21, 1981	Pacific Import Corp.	74-1-01088, etc.	Export value	Appraised values specified on entry papers by liquidating officer, less any additions included which reflect currency revaluation	C.B.S. Imports Corp. v. U.S. (C.D. 4730)	Los Angeles Miscellaneous articles

R81/354	Richardson, J. September 21, 1981	Concord Electronics Corp.	R68/880, etc.	Export value	Invoice unit value exclusive of buying commission and bank interest shown on invoices.	Concord Electronics Corp. v. U.S. (C.D. 4877)	Los Angeles Electronic equipment
R81/355	Maletz, J. September 21, 1981	Charmilles Corp. of America	79-10-01181	United States value	Determined by adding to f.o.b. unit invoice price in Swiss francs converted to a dollar value, for entries covered by schedule A attached to decision and judgment, at fixed rate of exchange as shown on special customs invoice or, in absence of special customs invoice, at rate shown on commercial invoice in entry documents (the "claimed value"), and for entries covered by schedule B, at the rate of exchange in effect at time of entry (the "claimed value"), 53% of difference between claimed value and appraised value	Agreed statement of facts	New York Machine tools, accesscries, and parts
R81/356	Maletz, J. September 21, 1981	Wanis Co.	80-12-00187	Export value	Rs. 28.708	Agreed statement of facts	New York 1,000 pieces of pure silk "Kurtas" (ladies tops)

DECISION NUMBER	JUDGE & DATE OF DECISION	PLAINTIFF	COURT NO.	BASIS OF VALUATION	HELD VALUE	BASIS	PORT OF ENTRY AND MERCHANDISE
R81/357	Maletz, J. September 22, 1981	Charmilles Corp. of America	76-3-00625	United States value	Determined by adding to f.o.b. unit invoice price in Swiss francs converted to a dollar value, for entries covered by schedule A attached to decision and judgment, at fixed rate of exchange as shown on special customs invoice or, in absence of special customs invoice, at rate shown on commercial invoice in entry documents (the "claimed value"), and for entries covered by schedule B, at the rate of exchange in effect at time of entry (the "claimed value"), 53% of difference between claimed value and appraised value	Agreed statement of fact	New York Machine tools, accessories, and parts

R81/356	Maletz, J. September 22, 1981	Charmilles Corp. of America	78-6-01035	United States value	Determined by adding to f.o.b. unit invoice price in Swiss francs converted to a dollar value, for entries covered by schedule A attached to decision and judgment, at fixed rate of exchange as shown on special customs invoice or, in absence of special customs invoice, at rate shown on commercial invoice in entry documents (the "claimed value"), and for entries covered by schedule B, at the rate of exchange in effect at time of entry (the "claimed value"), 58% of difference between claimed value and appraised value	Agreed statement of facts	New York Machine tools, accessories, and parts

DECISION NUMBER	JUDGE & DATE OF DECISION	PLAINTIFF	COURT NO.	BASIS OF VALUATION	HELD VALUE	BASIS	PORT OF ENTRY AND MERCHANDISE
R81/359	Maletz, J. September 22, 1981	Charmilles Corp. of America	78-5-00791, etc.	United States value	Determined by adding to f.o.b. unit invoice price in Swiss francs converted to a dollar value at fixed rate of exchange as shown on special customs invoice or, in absence of rate in special customs invoice, at rate shown on commercial invoice in entry documents (the "claimed value"), 53% of difference between claimed value and appraised value	Agreed statement of facts	New York Machine tools, accessories, and parts

R81/360	Maletz, J. September 22, 1981	Charmilles Corp. of America	78-7-01209	United States value	Determined by adding to f.o.b. unit invoice price in Swiss francs converted to a dollar value at fixed rate of exchange as shown on special customs invoice or, in absence of rate in special customs invoice, at rate shown on commercial invoice in entry documents (the "claimed value") 53% of difference between claimed value and appraised value	Agreed statement of facts	New York Machine tools, accessories, and parts
R81/361	Maletz, J. September 22, 1981	Mitsubishi International Corp.	R69/9944, etc.	Export value	Invoiced f.o.b. prices specified for each article	International Seaway Trading Corp. v. U.S. (C.D. 4773) wherein merchandise was held Classifiable under item 700.70, TSUS	Miami Footwear which have midsoles which contain iron powder fillers
R81/362	Maletz, J. September 22, 1981	Mitsubishi International Corporation	75-1-00210, etc.	American selling price	Appraised values less 23%, per pair	Agreed statement of facts	Los Angles Footwear

ERRATUM

In CUSTOMS BULLETIN, Vol. 15, No. 35, dated September 2, 1981, Slip Op. 81–73, page 48 in the opinion and page 50 in the third paragraph the name "George J. McManus appears it should read: "Gerald J. McManus"

International Trade Commission Notices

Investigations by the U.S. International Trade Commission

DEPARTMENT OF THE TREASURY, OCTOBER 8, 1981

The appended notices relating to investigations by the U.S. International Trade Commission are published for the information of Customs officers and others concerned.

WILLIAM VON RAAB,
Commissioner of Customs.

(19 CFR 207.40)

Notice of Termination of Countervailing Duty Investigation Concerning Steel Welded Wire Mesh From Italy

AGENCY: United States International Trade Commission.

ACTION: Termination of countervailing duty investigation under section 104(b)(1) of the Trade Agreements Act of 1979, with regard to steel welded wire mesh from Italy.

EFFECTIVE DATE: September 29, 1981.

FOR FURTHER INFORMATION CONTACT: Mr. Lynn Featherstone, Office of Investigations, telephone number (202) 523–0242.

SUPPLEMENTARY INFORMATION: The Trade Agreements Act of 1979, subsection 104(b)(1), requires the Commission in the case of a countervailing duty order issued under section 303 of the Tariff Act of 1930, upon the request of a government or group of exporters of merchandise covered by the order, to conduct an investigation to determine whether an industry in the United States would be materially injured, or threatened with material injury, or whether the establishment of such an industry would be materially retarded, if the order were to be revoked. On March 28, 1980, the Commission received a request from the Delegation of the Commission of the

European Communities for the review of the outstanding countervailing duty order on steel welded wire mesh from Italy (T.D. 68–149).

On July 22, 1981, the Commission was notified by letter that Hurricane Industries, Inc., the firm which now holds the assets of the original petitioner for the countervailing duty order, "does not wish to continue in this investigation and hereby withdraws the petition as it applies to our company."

While there is no provision in the Trade Agreements Act of 1979, or in its legislative history, permitting termination of a transition case investigation, termination of a properly instituted countervailing duty investigation is permitted under section 704(a) of the Tariff Act of 1930. That section directs the Commission to solicit public comment prior to termination and approve such termination only if it is in the public interest. Termination authority is explicit in cases based on newly filed countervailing duty petitions; it is implied with respect to existing countervailing duty orders.

On August 12, 1981, the Commission published a notice in the Federal Register (46 FR 40838) requesting public comment by September 11, 1981, on the proposed termination of the Commission investigation on steel welded wire mesh from Italy. No adverse comments were received in response to the Commission's notice.

The Commission is therefore terminating its investigation under section 104(b)(1) of the Trade Agreements Act of 1979 on steel welded wire mesh from Italy (T.D. 68–149). The termination of this investigation has the same effect as a determination that an industry in the United States would not be materially injured or threatened with material injury by reason of imports from Italy of steel welded wire mesh covered by the countervailing duty order if the order were to be revoked.

In addition to publishing this Federal Register notice, the Commission is serving a copy of this notice on all persons who have written the agency in connection with this investigation and is also notifying the Department of Commerce of its action is this case.

By order of the Commission.

KENNETH R. MASON,
Secretary.

(19 CFR 207.40)

Notice of Termination of Countervailing Duty Investigation Concerning Certain Cap Screws From Italy

AGENCY: United States International Trade Commission.

ACTION: Termination of countervailing duty investigation under section 104(b)(1) of the Trade Agreements Act of 1979, with regard to certain cap screws from Italy.

EFFECTIVE DATE: September 29, 1981.

FOR FURTHER INFORMATION CONTACT: Mr. Lynn Featherstone, Office of Investigations, telephone number (202) 523–0242.

SUPPLEMENTARY INFORMATION: The Trade Agreements Act of 1979, subsection 104(b)(1), requires the Commission in the case of a countervailing duty order issued under section 303 of the Tariff Act of 1930, upon the request of a government or group of exporters of merchandise covered by the order, to conduct an investigation to determine whether an industry in the United States would be materially injured, or threatened with material injury, or whether the establishment of such an industry would be materially retarded, if the order were to be revoked. On March 28, 1980, the Commission received a request from the Delegation of the Commission of the European Communities for the review of the outstanding countervailing duty order on certain cap screws from Italy (T.D. 76-225).

On July 23, 1981, the Commission was notified by letter that Russell, Burdsall, and Ward, Inc., the original petitioner for the countervailing duty order, wished to withdraw its petition on cap screws.

While there is no provision in the Trade Agreements Act of 1979, or in its legislative history, permitting termination of a transition case investigation, termination of a properly instituted countervailing duty investigation is permitted under section 704(a) of the Tariff Act of 1930. That section directs the Commission to solicit public comment prior to termination and approve such termination only if it is in the public interest. Termination authority is explicit in cases based on newly filed countervailing duty petitions; it is implied with respect to existing countervailing duty orders.

On August 12, 1981, the Commission published a notice in the Federal Register (46 FR 40838) requesting public comment by September 11, 1981, on the proposed termination of the Commission investigation on certain cap screws from Italy. No adverse comments were received in response to the Commission's notice.

The Commission is therefore terminating its investigation under section 104(b)(1) of the Trade Agreements Act of 1979 on certain cap screws from Italy (T.D. 76–225), which covers all such cap screws, one-quarter inch in diameter and over, of iron or steel. The termination of this investigation has the same effect as a determination that an industry in the United States would not be materially injured or threatened with material injury by reason of imports from Italy

of cap screws covered by the countervailing duty order if the order were to be revoked.

In addition to publishing this Federal Register notice, the Commission is serving a copy of this notice on all persons who have written the agency in connection with this investigation and is also notifying the Department of Commerce of its action is this case.

By order of the Commission.

Issued: October 1, 1981.

KENNETH R. MASON,
Secretary.

Sodium Gluconate From the European Economic Community [1]

Investigation No. 701–TA–79 (Final)

AGENCY: United States International Trade Commission.

ACTION: Institution of a final countervailing duty investigation.

SUMMARY: As a result of receiving notice from the United States Department of Commerce on September 16, 1981, that there is reason to believe or suspect that the European Economic Community is providing subsidies upon the manufacture, production, and exportation of sodium gluconate imported into the United States within the meaning of section 703 of the Tariff Act of 1930 (19 U.S.C. 1671b), the United States International Trade Commission (hereinafter "the Commission") hereby gives notice of the institution of investigation No. 701–TA–79 (Final) to determine whether an industry in the United States is materially injured, or is threatened with material injury, or the establishment of an industry in the United States is materially retarded, by reason of imports of such merchandise. For purposes of this investigation, the term "sodium gluconate" means the sodium salt of gluconic acid ($Na_6CH_{11}O_7$), provided for in item 437.52 of the Tariff Schedules of the United States. This investigation will be conducted according to the provisions of Part 207 of the Commission's *Rules of Practice and Procedure* (19 CFR 207, 44 FR 76457), Subpart C, effective January 1, 1980.

EFFECTIVE DATE: September 16, 1981.

FOR FURTHER INFORMATION CONTACT: Mr. Tim Timberlake, Staff Investigator, Office of Investigations, U.S. International Trade Commission, Room 348, 701 E Street, NW., Washington, D.C. 20436; telephone 202–523–4618.

[1] In its preliminary decision, the Commission entitled this case "Sodium Gluconate from the European Communities." Since the Department of Commerce has determined that the country in this case is the European Economic Community, the Commission has changed its title accordingly.

SUPPLEMENTARY INFORMATION: On July 27, 1981, the Commission unanimously determined, on the basis of the information developed during the course of investigation No. 701–TA–79 (Preliminary), that there is a reasonable indication that an industry in the United States is materially injured by reason of the importation of allegedly subsidized sodium gluconate from the European Communities. As a result of the Commission's determination, the Department of Commerce (the administering authority) continued its investigation into the question of the alleged subsidies, and has preliminarily estimated that the net subsidy on sodium gluconate exported to the United States from the European Economic Community to be $107.05 per metric ton. The final determination by the Department of Commerce as to whether the European Economic Community is subsidizing its manufacturers, producers, or exporters of sodium gluconate will be made by November 23, 1981.

WRITTEN SUBMISSIONS: Any person may submit to the Commission a written statement of information pertinent to the subject of this investigation. A signed original and nineteen (19) true copies of each submission must be filed at the Office of the Secretary, U.S. International Trade Commission Building, 701 E Street, NW., Washington, D.C. 20436, on or before December 21, 1981. All written submissions, except for confidential business data, will be available for public inspection.

Any submission of business information for which confidential treatment is desired shall be submitted separately from other documents. The envelope and all pages of such submissions must be clearly labeled "Confidential Business Information." Confidential submissions and requests for confidential treatment must conform with requirements of section 201.6 of the Commission's *Rules of Practice and Procedure* (19 CFR 201.6).

PUBLIC HEARING: The Commission will hold a public hearing in connection with this investigation on December 15, 1981, in the Hearing Room of the U.S. International Trade Commission Building, 701 E Street, NW., Washington, D.C. 20436, beginning at 10:00 a.m., e.s.t. Requests to appear at the hearing should be filed in writing with the Secretary to the Commission not later than the close of business (5:15 p.m., e.s.t.), December 4. 1981. All persons desiring to appear at the hearing and make oral presentations must file prehearing statements and should attend a prehearing conference to be held at 2:00 p.m., e.s.t., on December 7, 1981, in Room 117 at the U.S. International Trade Commission Building. Prehearing statements must be filed on or before December 9, 1981. For further information concerning the conduct of the investigation, hearing procedures,

and rules of general applications, consult the Commission's *Rules of Practice and Procedure*, Part 207, Subpart C (19 CFR 207), and Part 201, Subparts A through E (19 CFR 201).

This notice is published pursuant to section 207.20 of the Commission's *Rules of Practice and Procedure* (19 CFR 207.20, 44 FR 76458).

By order of the Commission.

Issued: September 29, 1981.

KENNETH R. MASON,
Secretary.

In the Matter of CERTAIN THERMAL CONDUCTIVITY SENSING GEM TESTERS AND COMPONENTS THEREOF	Investigation No. 337-TA-100

Notice of Prehearing Conference and Hearing

Notice is hereby given that a prehearing conference will be held in this case at 9:00 a.m. on November 2, 1981, in the Dodge Center, Room 201, 1010 Wisconsin Avenue, N.W., Washington, D.C., and the hearing will commence immediately thereafter.

The purpose of the prehearing conference is to review the trial memoranda submitted by the parties, to stipulate exhibits into the record, and to discuss any questions raised by the parties relating to the hearing.

The Secretary shall publish this notice in the Federal Register.

Issued: September 25, 1981.

JANET D. SAXON,
Administrative Law Judge.

In the Matter of CERTAIN STABILIZED HULL UNITS AND COMPONENTS THEREOF AND SONAR UNITS UTILIZING SAID STABILIZED HULL UNITS	Investigation No. 337-TA-103

Notice to All Parties

At the request of the parties the procedural schedule is changed to the original dates set forth in Order No. 2, and the hearing will commence on December 1, 1981.

Issued: September 25, 1981.

JANET D. SAXON,
Administrative Law Judge.

In the Matter of CERTAIN MOLDED-IN SANDWICH PANEL INSERTS AND METHODS FOR THEIR INSTALLATION	Investigation No. 337-TA-99

Order No. 16

For unanticipated but necessitous reasons of administrative management and judicial economy, Administrative Law Judge Donald K. Duvall is hereby relieved and Administrative Law Judge Janet D. Saxon is hereby designated as the Presiding Officer in this investigation, effective this date.

Such redesignation of the Presiding Officer will not affect the prehearing and hearing schedule previously ordered in this investigation and will afford the newly designated Presiding Officer adequate time to prepare for the hearing presently scheduled to commence following the prehearing conference on October 19, 1981.

The Secretary shall serve a copy of this order upon all parties of record and shall publish it in the Federal Register.

Issued: September 24, 1981.

DONALD K. DUVALL,
Chief Administrative Law Judge.

Investigation No. 701-TA-80 (Preliminary)

Lamb Meat From New Zealand

AGENCY: United States International Trade Commission.

ACTION: Institution of a preliminary countervailing duty investigation.

EFFECTIVE DATE: September 21, 1981.

SUMMARY: On September 21, 1981, the Commission was notified by the Department of Commerce that, in accordance with section 702 of the Tariff Act of 1930 (19 U.S.C. §1671a), it was commencing an investigation to determine whether the government of New Zealand offers its exporters, producers, and processors of lamb meat benefits that qualify as subsidies within the meaning of the Act. Accordingly, effective September 21, 1981, the Commission, pursuant to section 703(a) of the Act (19 U.S.C. §1671b(a)), instituted preliminary countervailing duty investigation No. 701-TA-80 (Preliminary) to determine whether there is a reasonable indication that an industry in the United States is materially injured, or is threatened with

material injury, or the establishment of an industry in the United States is materially retarded, by reason of imports from New Zealand of lamb meat, provided for in item 106.30 of the Tariff Schedules of the United States, upon which bounties or grants are alleged to be paid. The Commission must make its determination in the investigation within 45 days after the date on which the notice the notice of investigation was received from the Department of Commerce, or by November 5, 1981 (19 CFR §207.17). The investigation will be subject to the provisions of part 207 of the Commission's Rules of Practice and Procedure (19 CFR §207, 44 F.R. 76457), and particularly subpart B thereof.

FOR FURTHER INFORMATION CONTACT: Patrick J. Magrath, Office of Investigations (202–523–0283).

SUPPLEMENTARY INFORMATION: *Background.* On April 23, 1981, a petition was filed with the Department of Commerce by counsel for the National Wool Growers Association, Inc., Salt Lake City, Utah, alleging that imports of lamb meat from New Zealand are being subsidized within the meaning of section 303 of the Tariff Act of 1930 (19 U.S.C. § 1303). The National Lamb Feeders Association, Inc., Menard, Texas, became a copetitioner on May 12, 1981. As New Zealand was not at that time a "country under the Agreement" within the meaning of section 701(b) of the Act (19 U.S.C. § 1671(b)), there was no requirement for the petition to be filed with the Commission pursuant to section 702(b)(2) and no requirement for the Commission to conduct a preliminary material injury investigation pursuant to section 703(a).

On September 17, 1981, however, the United States Trade Representative announced that New Zealand had become a "country under the Agreement" (46 FR 46263). Accordingly, Commerce terminated its investigation under section 303, initiated an investigation under section 702, and notified the Commission of its action.

Written submissions. Any person may submit to the Commission on or before October 23, 1981, a written statement of information pertinent to the subject matter of this investigation. A signed original and nineteen copies of such a statement must be submitted.

Any business information which a submitter desires the Commission to treat as confidential shall be submitted separately and each sheet must be clearly marked at the top "Confidential Business Data." Confidential submissions must conform with the requirements of section 201.6 of the Commission's Rules of Practice and Procedure (19 CFR § 201.6). All written submissions, except for confidential business data, will be available for public inspection.

Conference. The Director of Operations of the Commission has scheduled a conference in connection with this investigation for 10:00 a.m., e.d.t., on October 16, 1981, at the U.S. International Trade Commission Building, 701 E Street, NW., Washington, D.C. Parties wishing to participate in the conference should contact the supervisory investigator for this investigation, Mr. Lynn Feathertone (202–523–0242). It is anticipated that parties in support of the petition for countervailing duties and parties opposed to the petition will each be collectively allocated one hour within which to make an oral presentation at the conference. Further details concerning the conduct of the conference will be provided by the supervisory investigator.

Inspection of the petition. A copy of the petition filed with the Department of Commerce in this case is available for public inspection at the Office of the Secretary, U.S. International Trade Commission.

This notice is published pursuant to section 207.12 of the Commission's Rules of Practice and Procedure (19 CFR § 207.12).

By order of the Commission.

Issued: September 24, 1981.

KENNETH R. MASON,
Secretary.

In the Matter of CERTAIN SURFACE GRINDING MACHINES AND LITERATURE FOR THE PROMOTION THEREOF	Investigation No. 337–TA–95

Notice of Commission Request for Comments Regarding Proposed Termination of Respondent Based on a Settlement Agreement

AGENCY: U.S. International Trade Commission.

ACTION: A request for public comment on the proposed termination of respondent based on a settlement agreement.

SUMMARY: The settlement agreement would result in the termination of the investigation as to respondent Performance Machine Tools. This notice requests comments from the public on the proposed termination.

DATES: Comments will be considered if received within 30 days of the date of publication of this notice. Comments should conform with section 201.8 of the Commission's Rules of Practice and Procedure (19 CFR § 201.8), and should be addressed to Kenneth R. Mason, Secretary, U.S. International Trade Commission, 701 E Street NW., Washington, D.C. 20436.

SUPPLEMENTARY INFORMATION: Complainant Brown and Sharpe Manufacturing Company and respondent Performance Machine tools moved in a joint motion for termination of this investigation as to Performance on the basis of a settlement agreement. The Commission investigative attorney supports the motion. On August 17, 1981, the presiding officer recommended that the joint motion be granted.

Notice of the institution of the investigation was published in the Federal Register of January 22, 1981 (46 FR 7107).

SETTLEMENT AGREEMENT: The settlement agreement provides in pertinent part as follows:

> Pending a determination by the U.S. International Trade Commission of the complaint filed in the Investigation, RESPONDENT shall refrain from importing, buying, selling, leasing, or otherwise transferring Surface Grinding Machines into the United States directly or indirectly from Taiwan or other countries, of the type and style which
>
> (a) are reproductions, copies, colorable imitations, or simulations of B & S [Brown and Sharpe Manufacturing Company] High Precision Surface Grinding Machines that have been sold under the designations 510, 612, 618, 818, 824, 1024, 1030, 1244, and 1236, or
>
> (b) are of the type offered for sale heretofore by Lian Feng Machine Co. of Taiwan, China, identified as Exhibit 14 attached to the B & S complaint in the investigation.

RESPONDENT shall refrain from copying, reprinting, using, selling, or distributing any unauthorized copies of manuals, catalogs, brochures, or other printed material prepared or owned by B & S and bearing a B & S copyright notice.

RESPONDENT shall refrain from printing, distributing, or authorizing the printing or distributing of any promotional material containing references to B & S or its trademarks, except in connection with the sale or servicing of B & S equipment.

RESPONDENT shall refrain from using any B & S manual, catalog, or other printed material, whether or not protected by copyright, in connection with the maintenance, repair, or sale of surface grinding machines or components thereof, other than B & S surface grinding machines or components thereof.

RESPONDENT shall refrain from importing, buying, selling, or otherwise transferring Surface Grinding Machines made in foreign countries which simulate the trade dress of B & S High Precision Surface Grinding Machines as exemplified by Exhibits 14, 15, and 16B of the Complaint filed in the Investigation.

RESPONDENT agrees to give to B & S two copies of all catalogs, manuals, advertisements, and promotional pieces promoting or making reference to surface grinding machines made by Lian Feng

Machine Co. that have been used, sold, or distributed by RESPONDENT.

RESPONDENT shall deliver to B & S prior to March 27, 1981 in affidavit form a statement relating to RESPONDENT'S purchase and sale of surface grinding machines made or sold by Lian Feng Machine Co., including (a) the total number purchased; (b) the dates of purchase; (c) the price paid; (d) the total number in inventory; (e) the total number sold; (f) the price of each sale; (g) the date of each sale.

RESPONDENT shall deliver to B & S prior to March 27, 1981, all copies of catalogs, manuals, and advertisements in its possession that were prepared by or for Lian Feng Machine Co. that contain reference to surface grinding machines that are reproductions, copies, colorable imitations, or simulations of B & S High Precision Surface Grinding Machines that have been sold under the designations 510, 612, 618, 818, 824, 1024, 1030, 1244, and/or 1236.

B & S and the RESPONDENT agree to file a joint motion before the U.S. International Trade Commission to terminate the Investigation with respect to RESPONDENT without prejudice.

B & S agrees to refrain from instituting any civil action for any matters which have been raised in the complaint filed before the U.S. International Trade Commission.

B & S hereby releases the RESPONDENT from any and all claims arising from those issues raised in the B & S Complaint filed in the investigation, including, but not limited to copyright and trademark infringement and unfair competition.

WRITTEN COMMENTS REQUESTED: In order to discharge its statutory obligation to consider the public interest, the Commission seeks written comments from interested persons regarding the effects of terminating this investigation as to respondent Performance Machine Tools on the basis of the settlement agreement on (1) the public health and welfare, (2) competitive conditions in the U.S. economy, (3) the production of like or directly competitive articles in the United States, and (4) U.S. consumers. All written comments must be filed with the Secretary to the Commission no later than 30 days after the date of publication of this notice in the Federal Register. In addition, pursuant to 19 CFR § 210.14(a)(2), the Commission has requested comments from the Department of Health and Human Services, the Department of Justice, the Federal Trade Commission, and the U.S. Customs Service.

ADDITIONAL INFORMATION: The original and 19 copies of all written submissions must be filed with the Secretary to the Commission, 701 E Street NW., Washington, D.C. 20436, telephone 202–523–0161. Any person desiring to submit a document (or portion

thereof) to the Commission in confidence must request *in camera* treatment. Such requests should be directed to the Secretary to the Commission and must include a full statement of the reasons why the Commission should grant such treatment. The Commission will either accept the submission in confidence or return it. All non-confidential written submissions will be available for public inspection at the Secretary's office.

FOR FURTHER INFORMATION CONTACT: Clarease E. Mitchell, Esq., Office of the General Counsel, U.S. International Trade Commission, 701 E Street NW., Washington, D.C. 20436; telephone 202–523–0148.

By order of the Commission

Issued: September 24, 1981.

KENNETH R. MASON,
Secretary.

In the Matter of DOXYCYCLINE | Investigation No. 337–TA–3

Notice of Motion To Modify Exclusion Order

AGENCY: U.S. International Trade Commission.

ACTION: Notice is hereby given that the Commission has received a motion to modify the exclusion order issued at the conclusion of the above-captioned investigation. In conformity with section 211.57 of the Commission's Rules of Practice and Procedure (46 FR 17533, Mar. 18, 1981), the motion and this notice will be served on each former party to the investigation. Within 30 days of such service, any former party served may file an answer to the motion.

DATES: Answers to the motion will be considered if received within 30 days of service upon the former party. Answers should conform with section 201.8 of the Commission's Rules of Practice and Procedure (19 CFR § 201.8), and should be addressed to Kenneth R. Mason, Secretary, U.S. International Trade Commission, 701 E Street, NW., Washington, D.C. 20436.

SUPPLEMENTARY INFORMATION: On April 12, 1979, the Commission issued an order excluding the importation into the United States of doxycycline falling within claim 10 of U.S. Letters Patent 3,200,149 for the remaining term of the patent except under license. That order is now in force.

On September 2, 1981, Agvar Chemicals, Inc., filed a motion with the Commission seeking modification of the doxycycline exclusion

order to permit the importation of small quantities of doxycycline to be used for testing or research purposes required to obtain Food and Drug Administration certification under 21 U.S.C. § 357, and not for sale to the consuming public.

FOR FURTHER INFORMATION CONTACT: N. Tim Yaworski, Esq., Office of the General Counsel, U.S. International Trade Commission, 701 E Street, NW., Washington, D.C. 20436; telephone 202–523–0311.

By order of the Commission.

Issued: September 23, 1981.

KENNETH R. MASON,
Secretary.

(332–132)

The Relationship of Exports in Selected U.S. Service Industries to U.S. Merchandise Exports

AGENCY: United States International Trade Commission.

ACTION: In accordance with the provisions of section 332(b) of the Tariff Act of 1930 (19 U.S.C. 1332(b)), the Commission has instituted, on its own motion, investigation No. 332–132 for the purpose of gathering and presenting information on the relationship between the exports of selected U.S. service industries and U.S. merchandise exports. Specifically, the Commission will investigate the level of product exports generated by selected service industries, to include air transportation, computer services, construction and engineering, educational services, equipment leasing services, financial services, franchising, health services, hotel and motel services, telecommunications, and transportation and related services; the implications of international service trade barriers to U.S. goods-producing industries; and the nature of product movements in international markets and foreign shipments of merchandise attributed to existing U.S. services trade.

EFFECTIVE DATE: September 16, 1981.

FOR FURTHER INFORMATION CONTACT: Mr. Larry Brookhart (telephone 202–523–0275), Office of Industries, U.S. International Trade Commission, Washington, D.C. 20436.

WRITTEN SUBMISSIONS: While there are no public hearings currently scheduled for this study, parties wishing hearings may so request. Written submissions from interested parties are invited. Commercial or financial information which a party desires the Commission to treat as confidential must be submitted on separate sheets of paper,

each clearly marked "Confidential Business Information" at the top. All submissions requesting confidential treatment must conform with the requirements of section 201.6 of the Commission's *Rules of Practice and Procedure* (19 CFR 201.6). All written submissions, except for confidential business information, will be made available for inspection by interested persons. To be assured of consideration by the Commission in this study, written statements should be submitted at the earliest practicable date, but no later than March 15, 1982. All submissions and other correspondence related to this investigation should be addressed to the Secretary, United States International Trade Commission, 701 E Street NW., Washington, D.C. 20436.

By order of the Commission.

Issued: September 21, 1981.

KENNETH R. MASON,
Secretary.

Index

U.S. Customs Service

Treasury decisions:	T.D. No.
Bonds; Consolidated aircraft	81-262
Customs regulations amended:	
Dominica added to list of nations	81-261
Parts 132,141 , and 142, relating to quota merchandise	81-260
Foreign currencies:	
Daily rates: Sept. 21-25, 1981	81-263
Variances: Sept. 21-25, 1981	81-264
Tariff rate quota: white or irish potatoes	81-259

U.S. GOVERNMENT PRINTING OFFICE : 1981 O - 354-808

DEPARTMENT OF THE TREASURY
U.S. CUSTOMS SERVICE
WASHINGTON, D.C. 20229

OFFICIAL BUSINESS
PENALTY FOR PRIVATE USE, $300

POSTAGE AND FEES PAID
DEPARTMENT OF THE TREASURY (CUSTOMS)
(TREAS. 552)

U.S.MAIL

15/43

Customs Bulletin

Regulations, Rulings, Decisions, and Notices concerning Customs and related matters

and Decisions

of the United States Court of Customs and Patent Appeals and the United States Court of International Trade

Vol. 15 OCTOBER 28, 1981 No. 43

NEWARK PUBLIC LIBRARY

NOV 12 1981

U. S. GOVT. PUBS.
DEPOSITORY 376

This issue contains

T.D. 81-265 Through 81-271
General Notice
Recent Unpublished Customs Service Decisions
Slip Op. 81-85 Through 81-90
International Trade Commission Notices

THE DEPARTMENT OF THE TREASURY
U.S. Customs Service

T1.11/3:

NOTICE

The abstracts, rulings, and notices which are issued weekly by the U.S. Customs Service are subject to correction for typographical or other printing errors. Users may notify the U.S. Customs Service, Logistics Management Division, Washington, D.C. 20229, of any such errors in order that corrections may be made before the bound volumes are published.

For sale by the Superintendent of Documents, U.S. Government Printing Office, Washington, D.C. 20402. Price: $2.25 (single copy domestic); $2.85 (single copy foreign). Subscription price: $55.00 a year domestic; $106.25 a year foreign.

U.S. Customs Service

Treasury Decisions

(T.D. 81-265)

Bonds

Approval and discontinuance of bonds on Customs Form 7587 for the control of Instruments of International Traffic of a kind specified in section 10.41a of the Customs Regulations.

Bonds on Customs Form 7587 for the control of instruments of international traffic of a kind specified in section 10.41a of the Customs Regulations have been approved or discontinued as shown below. The symbol "D" indicates that the bond previously outstanding has been discontinued on the month, day, and year represented by the figures which follow. "PB" refers to a previous bond, dated as represented by the figures in parentheses immediately following which has been discontinued. If the previous bond was in the name of a different company or if the surety was different, the information is shown in a footnote at the end of the list.

Dated: October 7, 1981.

Name of principal and surety	Date of bond	Date of approval	Filed with district director/area director/amount
Aluminum Company of America, 200 Park Ave., NY, NY; Federal Ins. Co. D 9/2/81	Sept. 3, 1971	Sept. 3, 1971	New York Seaport $10,000
Balfour MacLaine International, LTD and its food Division, Wall Street Plaza, New York, NY; Federal Ins. Co.	Aug. 12, 1981	Aug. 13, 1981	New York Seaport $10,000
Columbia LNG Corp., 20 Montchanin Rd., Wilmington, DE; St. Paul Fire & Marine Ins. Co. D 8/20/81	Sept. 16, 1975	Sept. 26, 1975	Detroit, MI $10,000
Contract Marine Carriers, Inc., 23 Broad St., Charleston, SC; U.S. Treasury Bill (PB 1/31/80) D 6/17/81 [1]	June 17, 1981	June 17, 1981	Charleston, SC $10,000
Forex Chemical Corp., 13 Sunflower Ave., P.O. Box 159, Paramus, NJ; Federal Ins. Co. D 9/4/81	July 26, 1977	July 27, 1977	New York Seaport $10,000

See footnotes at end of table.

Name of principal and surety	Date of bond	Date of approval	Filed with district director/area director/amount
T. H. Gonzalez, 662 Quarry St., Eagle Pass, TX; Washington International Ins. Co.	Aug. 6, 1981	Aug. 11, 1981	Laredo, TX $10,000
R. J. Kunik & Co., Inc., 1 Bala-Cynwyd Plaza, Bala-Cynwyd, PA; The Aetna Casualty & Surety Co. D 5/11/81	May 5, 1977	May 6, 1977	Boston, MA $25,000
Pacific Western Airlines, Ltd., Vancouver International Airport, Vancouver, B.C., Canada; Washington International Ins. Co.	Feb. 27, 1981	Feb. 27, 1981	Seattle, WA $10,000
Pan Atlantic Shipping Ltd., 200 Nye Ave., Irvington, NJ; Peerless Ins. Co.	July 31, 1981	Aug. 3, 1981	New York Seaport $10,000
Perez & Cia. de Puerto Rico, P.O. Box 10084, Santurce PR; Puerto Rican American Ins. Co. D 9/28/81	Sept. 26, 1980	Sept. 26, 1980	San Juan, PR $25,000
Star Nederland B.V., 3529 Whitebrook Plaza, Memphis, TN; St. Paul Fire & Marine Ins. Co. D 8/14/81	Sept. 25, 1980	Sept. 25, 1980	New Orleans, LA $10,000
Uiterwyk Corp., 3105 W. Waters Ave., Tampa, FL; Ins. Co. of North America (PB 3/31/77) D 8/5/81 [2]	Aug. 4, 1981	Aug. 5, 1981	Tampa, FL $10,000

[1] Surety is American Manufacturers Mutual Ins. Co.
[2] Surety is Fidelity & Deposit Co. of MD.

BON-3-10

MARILYN G. MORRISON,
Director,
Carriers, Drawback and Bonds Division.

(T.D. 81-266)

Rider to Private Carrier's Bond (CF 3588) To Implement T.D 81-243

The Customs Service eliminated certain requirements applicable to private carriers of bonded merchandise by T.D. 81-243 (46 F.R. 45600). A person who desires private carrier status is no longer required to be the proprietor for Customs bonded warehouse. Before T.D. 81-243, a private bonded carrier was allowed only to move merchandise (1) from the place where the merchandise was imported to the private carrier's bonded warehouse, or (2) from the private carrier's bonded warehouse to another bonded warehouse if the merchandise was to be exported. Those requirements which limited the types of movements performed by private bonded carriers were eliminated by T.D. 81-243.

The Customs Service is revising the Private Carrier's Bond (CF

3588) to reflect the changes in the Customs Regulations made by T.D. 81-243.

In any new bond filed with the Customs Service on or after October 14, 1981, the words "to its Customs bonded warehouse(s) at the port(s) of ————— ," in the first whereas clause may be lined out by the bond obligors before they submit the executed bond to the Customs Service for approval. The words in condition 5 of the bond "from his Customs bonded warehouse to another Customs bonded warehouse for physical deposit, or if for exportation shall transport his own merchandise under bond from his Customs bonded warehouse to a Customs bonded warehouse at the port of exportation" do not apply to any movement made on or after October 14, 1981, the effective date for T.D. 81-243.

Dated: October 8, 1981.

BON-1-03

GEORGE C. STEUART,
(For Marilyn G. Morrison,
Director, Carriers, Drawback and Bonds Division).

(T.D. 81-267)

(521854)

Three-Wheel All-Terrain Vehicles; Change of Practice Withdrawn

AGENCY: U.S. Customs Service, Department of the Treasury.

ACTION: Withdrawal of proposed change of practice.

SUMMARY: This document gives notice that the Customs Service is withdrawing a proposed change of practice concerning the tariff classification of three-wheel all-terrain vehicles. After reconsideration of the matter, Customs will continue the established and uniform practice of classifying the subject vehicles under the provision for other motor vehicles (except motorcycles) for the transport of persons or articles, in item 692.10, Tariff Schedules of the United States.

FOR FURTHER INFORMATION CONTACT: James A. Seal, Classification and Value Division, U.S. Customs Service, 1301 Constitution Ave., NW., Washington, D.C. 20229 (202-566-8181).

SUPPLEMENTARY INFORMATION:

BACKGROUND

On November 28, 1980, Customs published a notice in the Federal Register (45 FR 79221), to advise the public that it was reviewing an

established and uniform practice concerning the tariff classification of three-wheel all-terrain vehicles. Customs currently classifies the subject vehicles under the provision for other motor vehicles (except motorcycles) for the transport of persons or articles, in item 692.10, Tariff Schedules of the United States (TSUS) (19 U.S.C. 1202). The proposed change of practice, if adopted, would have resulted in the reclassification of those vehicles under the provision for motorcycles in item 692.50, TSUS, at a higher rate of customs duty.

Upon request, an extension of time to February 27, 1981, within which to submit comments on the proposal was granted, and a notice to that effect was published in the Federal Register on January 12, 1981 (46 FR 2766).

Only one comment was received in response to the proposed change of practice. The comment was in opposition to the proposal.

WITHDRAWAL OF PROPOSED CHANGE OF PRACTICE

The essence of Customs position that precipitated the proposed change of practice was that a three-wheel all-terrain vehicle is a type of motorcycle and, as such, is properly classifiable under the *eo nomine* provision for motorcycles, item 692.50, TSUS. However, after study of the comment received and further reconsideration of the matter, Customs has concluded that the subject vehicles have been, and should continue to be, properly classified under item 692.10, TSUS, as other motor vehicles (except motorcycles) for the transport of persons or articles. The legal rationale for that position is articulated fully in a letter dated June 26, 1981, addressed to the Area Director of Customs, New York Seaport (CLA–2 CO:R:CV:G/068246 JAS), which is reproduced as an appendix to this document. Accordingly, the subject proposed change of practice is withdrawn.

DRAFTING INFORMATION

The principal author of this document was Todd J. Schneider, Regulations Control Branch, U.S. Customs Service. However, other Customs personnel participated in its development.

Approved: August 26, 1981.

ALFRED R. DE ANGELUS,
Acting Commissioner of Customs.

Approved: August 26, 1981.

JOHN P. SIMPSON
(For John P. Simpson, Assistant Secretary of the Treasury).

[Published in the Federal Register, Oct. 19, 1981 (46 FR 51358)]

U.S. DEPARTMENT OF THE TREASURY,
U.S. CUSTOMS SERVICE,
Washington, June 26, 1981.

AREA DIRECTOR OF CUSTOMS,
New York Seaport,
New York, N.Y.

DEAR SIR: This is in response to your memorandum of August 8, 1979 (CLA-2-06-S:C:DI-02 203), which set forth your views on whether an established and uniform practice (19 U.S.C. 1315(d)), exists in the classification of certain three-wheeled all-terrain cycles (ATC) from Japan. A notice proposing to change the practice of classifying ATCs under the tariff provision for other motor vehicles used to transport persons or articles, in item 692.10, Tariff Schedules of the United States (TSUS), was published in the Federal Register on November 28, 1980 (45 FR 79221). One comment was received in response thereto. Our position on the matter is hereinafter set forth.

These three-wheeled vehicles feature a T-shaped chassis and resemble a motorcycle but with two rear wheels. All three wheels are fitted with fat donut-type 22×11 tires which enable the vehicle to maneuver easily on all types of terrain. Their one cylinder engines range in size from 72cc to 105cc, and produce around 8hp. The ATC utilizes a handlebar for steering and has a seat that is straddled by the driver. The ATC does not normally exceed 302 lbs. in weight.

By way of background, in a letter dated July 15, 1970 (MFG 433.7/005618), published as ORR 760–70, three-wheeled all-terrain vehicles were held to be classifiable under the tariff provision for other motor vehicles (except motorcycles) for the transport of persons or articles, in item 692.10, TSUS. However, in a letter dated June 20, 1977 (049919), the Electric Trike, a battery-powered three-wheeled vehicle, was held to be classifiable under the tariff provision for motorcycles, in item 692.50 TSUS. In another letter dated April 12, 1979 (057874), two models of the Honda ATC were held to be similarly classifiable.

In our cases 049919 and 057874, great weight was placed on *The Explanatory Notes to Brussels Nomenclature,* in holding three-wheeled vehicles to be classifiable in item 692.50, TSUS, and also in the National Highway Traffic Safety Administration (NHTSA) definition of a motorcycle as a "two-wheeled vehicle with motive power or a three-wheeled vehicle with motive power." It should be noted that the courts have held *Brussels* to be a useful source of legislative history with respect to the tariff schedules when a sufficient nexus can be found between it and the tariff schedules, that is, the order, language and phraseology of *Brussels* does not differ from the provisions of the

tariff schedules. See *W. R. Filbin and Co., Inc.* v. *United States*, 63 Cust. Ct. 200, CD 3897 (1969), *M. Hohner Inc.* v. *United States*, 63 Cust. Ct. 496, CD 3942 (1969), and related cases. In this regard, the line heading to Explanatory Note 87.09 reads MOTOR-CYCLES, AUTO-CYCLES AND CYCLES FITTED WITH AN AUXILIARY MOTOR WITH OR WITHOUT SIDE-CARS: SIDE-CARS OF ALL KINDS. This heading is far broader in scope than item 692.50, TSUS, which covers only motorcycles. There is doubt, therefore, that a clear nexus exists between these two provisions, such that a legislative intent to classify three-wheeled vehicles, not having the character of motor vehicles, in item 692.50, TSUS, is not manifest.

The NHTSA definition of the term "motorcycle" is not persuasive for tariff purposes inasmuch as it is a definition dealing with non-tariff matters. See *International Spring Mfg. Co.*, v. *United States*, 85 Cust. Ct. 5 CD 4862 (1980). Likewise, it is noted that the Society of Automotive Engineers (SAE) recognizes the existence of three-wheeled motorcycles, in designating them by "a vertical plane which passes through the center line of the single wheel and through the mid-point of the two wheels sharing the same axis of rotation." See SAE Designation J 213a. The SAE establishes various product and material standards in the automobile and steel industries. While Customs recognizes SAE designations for some purposes (i.e., drawback), such designations are guidelines only and are not persuasive as to common meaning of a term for tariff purposes.

The issue, in our opinion, is whether the ATC is embraced within the *eo nomine* designation for motorcycles, in item 629.50, TSUS. The meaning of a word in a tariff provision is determined by its "common meaning," which is presumed to be its commercial meaning. See *United States* v. *C. J. Tower and Sons*, 48 CCPA 87, CAD 770 (1961).

Common meaning is to be determined as a matter of law, for which purpose recourse may be had to lexicographic sources such as dictionaries, scientific authorities, testimony of competent witnesses and other reliable sources of information. See *Trans-Atlantic Company* v. *United States*, 60 CCPA 100, CAD 1088 (1973). Most lexicographic authorities define the term "motorcycle" to mean a motorized two-wheeled vehicle, or one having a third wheel only when a sidecar is attached. In none of the motorcycle trade magazines, brochures or other promotional literature of which we are aware, is the ATC characterized as a motorcycle. See *Audiovox Corp.* v. *United States*, Slip Op. 81-11 (1981). The Motorcycle Industry Council, a trade organization representing domestic motorcycle distributors (Yamaha, Suzuki, and Honda), all of whom distribute the ATC, informs us that it is bought, sold and referred to in the trade as an all-terrain cycle. It is not sold as a motorcycle. Most dealerships which we have infor-

mally surveyed in this area have separate sales departments for ATCs. The standard street motorcycle, off-highway dirt or trail bike, and moped are sold in a separate department.

In determining whether an article is embraced within an *eo nomine* designation, its use may be considered in order to establish its identity. See *United States* v. *Quon Quon Company*, 46 CCPA 70, CAD 699 (1959), and related cases. While motorcycles have both on and off-highway uses for transportation, recreation and competition, the ATC is strictly an off-highway cycle or vehicle. The trend in many midwestern states is to market the ATC as an off-road utility vehicle suitable for a wide variety of farming, commercial and industrial purposes. It is suitable for hauling small farm wagons, to accommodate a snow plow, to pull stumps etc.

Classification should be determined largely by a consideration of the design, character, and purpose of the machine. See *Giddings & Lewis Machine Tool Co., et. al.* v. *United States*, 61 Cust. Ct. 284, CD 3612 (1968). Mechanically, there are various similarities and differences between motorcycles and ATCs. Both have what is known as triple tree front suspensions and rigid axle rear suspensions. The motorcycle has shock absorbers while the ATC has none. Both have manual or automatic transmissions with no reverse gear. Both have interlocking brakes, either disc or drum and shoe. These brakes are either foot and/or handlebar activated. However, while both the motorcycle and ATC have chain driven sprockets (the rear wheels are driven off a sprocket inside the engine by means of a chain) we are informed that many motorcycle models are shaft-driven as a passenger automobile would be. However, the ATC is never shaft-driven because of the need for positive drive on both rear wheels at the same time. This, together with high flotation tires, gives the ATC its all-terrain capability, in much the same fashion as a four-wheel drive jeep. Also, whole both the motorcycle and the ATC possess internal combustion, gas fueled engines, the motorcycle engine is generally more powerful, that is, it ranges in size up to 1300cc. This is because the standard motorcycle has need for high rpm for speed purposes and does not generate torque or thrust as does the ATC. The ATC, on the other hand, has a one cylinder engine which ranges in size from 115 to 400cc. These low rpm engines generate the high torque needed at low speeds resulting in the increased pulling capacity for which the ATC is becoming increasingly popular.

In considering this matter we are mindful that while the meaning of an *eo nomine* designation is determined as of the effective date of the tariff statute it will include all articles subsequently created which fairly come within its scope. See *Hoyt, Stepston et. al.* v. *United States*, 52 CCPA 101, CAD 865 (1965). However, it is equally true

354-809 O - 81 - 2

that for tariff purposes technological advancements, expanded markets and their effect on consumer expectations must be considered. While the evidence is by no means conclusive, it is our opinion that the ATC is not embraced within the common meaning of the term "motorcycle."

Consequently, three-wheeled all-terrain cycles of the type herein described are properly classifiable under the tariff provision for other motor vehicles of a type used to transport persons or articles, in item 692.10, TSUS. Our letter of April 12, 1979 (057874), is revoked.

Sincerely,

HARVEY B. FOX,
Director, Classification and Value Division.

(19 CFR Part 134)

(T.D. 81-268)

Specific Country of Origin Marking Requirements for Imported Compressed Gas Cylinders

AGENCY: U.S. Customs Service, Department of the Treasury.

ACTION: Ruling; Policy statement under section 134.42, Customs Regulations.

SUMMARY: Customs has learned that the country of origin on imported compressed gas cylinders, classified under items 640.05 and 640.10, Tariff Schedules of the United States, is sometimes marked by being printed on easily removed adhesive backed paper stickers. This document gives notice that, with certain, stated exceptions, Customs will require the subject cylinders to be permanently and legibly marked with the country of origin by die stamping, molding, etching, raised lettering, or an equally permanent method of marking.

DATE: This ruling shall be effective as to merchandise entered, or withdrawn from warehouse, for consumption on or after (90 days from date of publication in the Federal Register).

FOR FURTHER INFORMATION CONTACT: Fred Burns-O'Brien, Entry Procedures and Penalties Division, U.S. Customs Service, 1301 Constitution Avenue, NW., Washington, D.C. 20229 (202-566-5765).

SUPPLEMENTARY INFORMATION:

BACKGROUND

Section 304(a), Tariff Act of 1930, as amended (19 U.S.C. 1304(a)), provides that every imported article of foreign origin, or its container,

shall be legibly and conspicuously marked to indicate to an ultimate purchaser in the United States the English name of the country of origin of the article. That section also authorizes the Secretary of the Treasury to require specific methods of marking articles.

Part 134 of the Customs Regulations (19 CFR Part 134), sets forth the regulations implementing the country of origin marking requirements of 19 U.S.C. 1304(a), together with certain marking provisions of the Tariff Schedules of the United States (TSUS) (19 U.S.C. 1202). Section 134.41(a), Customs Regulations (19 CFR 134.41(a)), states that as a general rule marking requirements are best met by marking that is "worked into the article" at the time of manufacture. Section 134. 42, Customs Regulations (19 CFR 134. 42), provides that specific methods of marking merchandise with its country of origin may be required by the Commissioner of Customs in accordance with 19 U.S.C. 1304(a), and that notices of such rulings shall be published in the Federal Register and the CUSTOMS BULLETIN.

Customs has learned that the country of origin marking requirements are not being applied uniformly to imported compressed gas cylinders, classified under items 640.05 and 640.10, TSUS. Sometimes, the name of the country of origin on those articles is marked by being printed on easily removed adhesive-backed paper stickers. Permanent marking of the subject cylinders is needed to ensure that an ultimate purchaser in the United States will be aware of the country of origin of the articles.

SPECIFIC METHOD OF MARKING REQUIRED

To provide for uniformity of application of the country of origin marking requirements of 19 U.S.C. 1304, and to clarify those marking requirements, imported compressed gas cylinders shall be marked with their country of origin as follows:

1. Compressed gas cylinders, imported individually or in bulk by a distributor for resale to ultimate purchasers in the United States, shall each be permanently and legibly marked with the country of origin by die stamping, molding, etching, raised lettering, or an equally permanent method of marking.

2. There are two exceptions from the general country of origin marking requirement stated above.

(a) If a compressed gas cylinder is imported directly from a foreign supplier for use by the importer and not intended for sale in its imported or any other form, the cylinder may be excepted from country of origin marking under 19 U.S.C. 1304(a)(3)(F).

(b) If a compressed gas cylinder is ordered directly from a foreign supplier by a contractor or other ultimate purchaser in the United States who will use it and not offer it for resale, and if Customs is

satisfied that the cylinder was manufactured in the country named in the invoice, it may be excepted from country of origin marking under 19 U.S.C. 1304 (a)(3)(H).

AUTHORITY

This notice is being published in accordance with section 304, Tariff Act of 1930, as amended (19 U.S.C. 1304), and section 134.42, Customs Regulations (19 CFR 134.42).

DRAFTING INFORMATION

The principal author of this document was Todd J. Schneider, Regulations Control Branch, Office of Regulations and Rulings. However, personnel from other Customs offices participated in its development.

Dated: October 9, 1981.

WILLIAM T. ARCHEY,
Acting Commissioner of Customs.

[Published in the Federal Register Oct. 19, 1981 (46 FR 51243)]

(T.D. 81-269)

The table below lists rates of exchange, in United States dollars for certain foreign currencies, which are based upon rates certified to the Secretary of the Treasury by the Federal Reserve of New York under provisions of section 522(c), Tariff Act of 1930, as amended (31 U.S.C. 372(c)), for the information and use of Customs officers and others concerned pursuant to Part 159, Subpart C, Customs Regulations (19 CFR 159, Subpart C).

QUARTER BEGINNING: OCTOBER 1, 1981 THROUGH DECEMBER 31, 1981

Country	Name of currency	U.S. dollars
Australia	Dollar	$1.1430
Austria	Schilling	.061200
Belgium	Franc	.026261
Brazil	Cruziero	.009388
Canada	Dollar	.829600
China, P.R	Renminbi Yuan	.564366
Denmark	Krone	.136687
Finland	Markka	.222941

Country	Name of currency	U.S. dollars
France	Franc	.179565
Germany	Deutsche Mark	.430478
Hong Kong	Dollar	.162470
India	Rupee	.109890
Iran	Rial	.012353
Ireland	Pound	1.5675
Italy	Lira	.000845
Japan	Yen	.004290
Malaysia	Dollar	.429646
Mexico	Peso	.039612
Netherlands	Guilder	.387447
New Zealand	Dollar	.8225
Norway	Krone	.169377
Philippines	Peso	.125039
Portugal	Escudo	.015314
Republic of South Africa	Rand	1.0500
Singapore	Dollar	.471698
Spain	Peseta	.010361
Sri-Lanka	Rupee	.048792
Sweden	Krona	.178603
Switzerland	Franc	.507872
Thailand	Baht (Ticai)	.043384
United Kingdom	Pound	1.8310
Venezuela	Bolivar	.232612

(LIQ-03-01 O:C:E)

Dated: October 1, 1981.

KENNETH A. RICH,
Acting Chief,
Customs Information Exchange.

(T.D. 81-270)

Foreign Currencies—Daily Rates for Countries Not on Quarterly List

The Federal Reserve Bank of New York, pursuant to section 522(c), Tariff Act of 1930, as amended (31 U.S.C. 372 (c)), has certified buying rates for the dates and foreign currencies shown below. The rates of exchange, based on these buying rates, are published

for the information and use of Customs officers and others concerned pursuant to Part 159, Subpart C, Customs Regulations (19 CFR 159, Subpart C).

Argentina peso:	
September 28–October 1, 1981	$0.000175
October 2, 1981	.000172
Chile peso:	
September 28–October 2, 1981	$0.025575
Colombia peso:	
September 28–October 1, 1981	$0.017762
October 2, 1981	.017715
Greece drachma:	
September 28, 1981	$0.017825
September 29, 1981	.017544
September 30, 1981	.017437
October 1, 1981	.017361
October 2, 1981	.017513
Indonesia rupiah:	
September 28–October 2, 1981	$0.001582
Israel shekel:	
September 28, 1981	$0.074850
September 29–October 2, 1981	.074074
Peru sol:	
September 28–October 2, 1981	$0.002212
South Korea won:	
September 28–October 2, 1981	$0.001468

(LIQ–03–01 O:C:E)

Dated: October 2, 1981.

KENNETH A. RICH,
Acting Chief,
Customs Information Exchange.

(T.D. 81–271)

Foreign Currencies—Variances From Quarterly Rate

The following rates of exchange are based upon rates certified to the Secretary of the Treasury by the Federal Reserve Bank of New York, pursuant to Section 522(C), Tariff Act of 1930, as amended (31 U.S.C. 372(c)), and reflect variances of 5 per centum or more from the quarterly rate published in Treasury Decision for the following countries. Therefore, as to entries covering merchandise exported on the dates listed, whenever it is necessary for Customs purposes to

convert such currency into currency of the United States, conversion shall be at the following rates.

Austria schilling:	
September 28, 1981	Quarterly
September 29, 1981	$0. 061958
September 30, 1981	Quarterly
Brazil cruzeiro	
September 28–30, 1981	$0. 009388
Hong Kong dollar:	
September 28, 1981	$0. 162707
September 29, 1981	. 163399
September 30, 1981	. 162933
India rupee	
September 28, 1981	$0. 108696
September 29–30, 1981	. 109649
Republic of South Africa rand:	
September 28–29, 1981	$1. 0472
September 30, 1981	1. 0470
Sri-Lanka rupee:	
September 28–30, 1981	$0. 048792
Sweden krone:	
September 28, 1981	$0. 177431
September 29, 1981	. 178731
September 30, 1981	. 178412
Switzerland franc:	
September 28, 1981	Quarterly
September 29, 1981	$0. 509424
September 30, 1981	. 506329
Thailand baht (tical):	
September 28–30, 1981	$0. 043384
United Kingdom pound:	
September 28, 1981	$1. 7790
September 29, 1981	1. 7945
September 30, 1981	1. 8030

(LIQ–03–01 O:C:E)

Dated: September 30, 1981.

KENNETH A. RICH,
Acting Chief,
Customs Information Exchange.

U.S. Customs Service

General Notice

(19 CFR Part 177)

(T.D. 81-214)

Tariff Classification: Ornamented and Not Ornamented Wearing Apparel

AGENCY: U.S. Customs Service, Department of the Treasury.

ACTION: Notice announcing the application of a court decision to the tariff classification of certain merchandise; correction.

SUMMARY: This document corrects a notice concerning the manner in which the Customs Service will apply the principles announced by the U.S. Court of Customs and Patent Appeals in *The Ferriswheel* v. *United States*, C.A.D. 1260, to certain specified garments, which was published as T.D. 81-214 in the Federal Register on August 21, 1981 (46 FR 42446).

FOR FURTHER INFORMATION CONTACT: Robert Joseph Pisani, Regulations Control Branch, U.S. Customs Service (202-566-8237).

The following corrections are made to the notice document:

1. On page 42446, left hand column, the first sentence under the caption "Effective Dates," is corrected to read "The change in classification with respect to western-style shirts, military style and bush/safari garments with epaulets, described below, will be effective after December 21, 1981."

2. On page 42447 the last sentence in the paragraph at the top of the left-hand column, is corrected to read "The classification of such garments will, after December 21, 1981, be determined on the characteristics of each garment."

Dated: October 9, 1981.

STEPHEN PINTER,
Director, Regulations Control and Disclosure Law Division.

[Published in the Federal Register Oct. 20, 1981 (46 FR 51382)]

Recent Unpublished Customs Service Decisions

The following listing of recent administrative decisions issued by the U.S. Customs Service, and not otherwise published, is published for the information of Customs officers and the importing community. Although the decisions are not of sufficient general interest to warrant publication as Customs Service Decisions, the listing describes the issues involved and is intended to aid Customs officers and concerned members of the public in identifying matters of interest which recently have been considered by the U.S. Customs Service.

A copy of any decision included in this listing, identified by its date and file number, may be obtained in a form appropriate for public distribution upon written request to the Office of Regulations and Rulings, Attention: Legal Retrieval and Dissemination Branch, Room 2404, U.S. Customs Service, 1301 Constitution Avenue, N.W., Washington, D.C. 20229. These copies will be made available at a cost to the requester of $0.10 per page. However, the Customs Service will waive this charge if the total number of pages copied is ten or less.

Decisions listed in earlier issues of the CUSTOMS BULLETIN, through February 2, 1981 are available in microfiche format at a cost of $30.90** ($0.15 per sheet of fiche). It is anticipated that additions to the microfiche will be made quarterly and subscriptions are available. Requests for the microfiche now available and for subscriptions should be directed to the Legal Retrieval and Dissemination Branch. Subscribers will automatically receive updates as they are issued and will be billed accordingly.

Dated: October 8, 1981.

B. JAMES FRITZ,
Director,
Regulations Control and Disclosure Law Divison.

Date of decision	File No.	Issue
07-30-81	064831	Classification: PVC glove (705.85)
08-05-81	065267	Classification: down filled garments (380.84, 380.90, 382.81, 382.87, 748.40)

354-809 0 - 81 - 3

Date of decision	File No.	Issue
07-28-81	065556	Classification: women's footwear (700.60)
07-23-81	065661	Classification: denim jeans with hammer loop are not considered ornamented for tariff classification purposes
07-31-81	065631	Classification: elastic fabric or powernet (352.80)
07-21-81	065674	Classification: reinforced paper and disposable surgical gowns (253.35, 256.87)
07-28-81	065681	Classification: sugar beet planting system (662.20, 664.10, 678.20)
07-23-81	065755	Classification: windmill (660.85, 660.97, 870.40)
07-28-81	065812	Classification: domestic home gardening irrigation system (662.50, 870.40)
07-28-81	065836	Classification: postal zip code separator (678.50)
08-26-81	065937	Classification: ladies belt buckle (745.45)
08-26-81	065964	Classification: powdered cocoa or chocolate milk mix (183.00, 950.19)
07-29-81	066099	Classification: stainless steel garden tool set (651.39)
07-30-81	066323	Classification: anaerobic waste processors (660.10, 660.42, 660.56, 660.97, 661.12, 661.95, 678.50, 682.60, 685.90, 870.40)
08-13-81	066495	Classification: components to an access flooring system (355.25, 389.50, 657.25, 657.40)
09-17-81	066553	Classification: hand-crochet infants clothing (382.04, 382.78)
07-29-81	066753	Classification: switch-mode inductor/driver transformer assembly (682.60)
08-26-81	066860	Classification: triple-needle stitching on outer leg seams and crotch do not constitute ornamentation
08-13-81	066982	Classification: canvas basketball shoes (700.60)
07-28-81	066999	Classification: reactor used to break down starch into sugar (661.68)
08-26-81	068022	Classification: toy road racing set (737.95)
08-28-81	068112	Classification: nylon tag fasteners (745.65)
08-19-81	068151	Classification: pedal reflectors (774.60)
09-03-81	068182	Classification: rummy tile game (735.20)
09-03-81	068195	Classification: element control panel for gas stoves (652.75)
09-03-81	068257	Classification: beachcomber footwear (700.60)
09-03-81	068267	Classification: ladies plastic/mesh clogs (700.60)
09-09-81	068362	Classification: ski golves (735.00)
08-05-81	068365	Classification: ladies casual open-toe, ankle strap, low wedge shoe (700.60)
08-05-81	068366	Classification: ladies casual shoe (700.60)
07-21-81	068388	Classification: accumulators used in hydraulic systems (681.39)
08-26-81	068434	Classification: electronic detection unit for removing foreign matter from freshly picked vegetables (666.25)
07-28-81	068453	Classification: chemical processing equipment (661.68)
08-13-81	068454	Classification: bicycle trainer wheels (657.25)
08-26-81	068464	Classification: plastic lampshade covers (772.35)

Date of decision	File No.	Issue
07-31-81	068493	Classification: ladies casual shoe (700.60)
08-19-81	068529	Classification: lip and eyeliner brushes (750.60)
09-03-81	068568	Classification: molded translucent plastic footwear bottom and strap (700.56)
09-17-81	068683	Classification: footwear (700.60)
08-06-81	068741	Classification: cotton pre-washed denim jeans (382.33 380.39)
07-30-81	068758	Classification: ruling not retroactive with respect to entries made subsequent to decision on difference of opinion: strawberry flavorbase (146.75, 183.05)
08-14-81	068764	Classification: women's casual shoe (700.64 through 700.71)
09-17-81	068818	Classification: ski glove liners (735.06)
07-28-81	068822	Classification: wooden toys and puzzles (735.20, 737.55)
07-23-81	068854	Classification: yogurt flavorbases (146.85)
09-17-81	068906	Classification: plastic strips used to secure a fruit tree bud to a rootstock (389.62)
08-26-81	068927	Classification: pedal reflectors (774.60)
08-19-81	068932	Classification: children's "character" footwear (700.60)
09-10-81	068980	Classification: nylon knapsack (706.28)
08-19-81	068991	Classification: beverage concentrate and beverage reconstituted concentrate (166.40, 183.05)
09-08-81	105253	Vessels: dutiability of pleasure boats entered by a nonresident intending to take up residence in the U.S. (812.30, 696.05, 696.10, 800.00)
09-14-81	105287	Vessels: use of a foreign-flag vessel to transport tank trucks containing chemicals to a port in Puerto Rico from other ports in the U.S. violates 46 U.S.C. 883.
09-15-81	105310	Instruments of International Traffic: Dutiable status of tank containers used in transporting petroleum from the U.S. west coast to Hawaii, Guam or the Philippines (640.20, 640.30, 832.00)
08-13-81	542467	Value: deduction of C.I.F. duty-paid charges under transaction value
09-14 81	542480	Value: valuation of data processing equipment manufactured by foreign subsidiaries of a U.S. parent corporation
09-15-81	542485	Value: appraisement of steam turbine generators on the basis of U.S. value, represented by the contract price to the ultimate purchaser, less the appropriate statutory deductions
09-04-81	542529	Value: calculation of the appraised dutiable value and domestic forfeiture value of certain merchandise
09-08-81	542542	Value: export value may exist if purchaser is not located in U.S. and if merchandise is destined for the U.S. when sold

Date of decision	File No.	Issue
08-25-81	542561	Value: foreign inland freight charge is dutiable under transaction value unless merchandise is purchased ex-factory
07-27-81	800529	Classification: pesticide products (408.38)
08-05-81	801000	Classification: electronic sign kits with cabinets (688.45)
08-05-81	801007	Classification: plastic coated knit fabrics (337.20, 355.81, 353.50)
08-05-81	801013	Classification: magnetic mobile inspection light and lantern (688.15, 688.45)
08-19-81	801018	Classification: cabin tents with sewn-on labels (386.09)
08-06-81	801019	Classification: gloves (704.32, 705.35)
08-26-81	801020	Classification: scale model construction kit of prototype motorcycle (737.09)
08-05-81	801023	Classification: profiled steel tubes (609.80, 610.30, 610.31, 610.32, 610.39, 610.49)
08-05-81	801026	Classification: printed shade cards (273.35)
08-13-81	801029	Classification: iron valve castings used in fire protection sprinkler systems
08-05-81	801031	Classification: Natural L—Tryptophane (425.04)
08-05-81	801035	Classification: woven fabric made from carbon fibers (339.10)
08-18-81	801036	Classification: acrylic men's and women's embroidered knit sweaters (380.04, 382.04)
08-05-81	801045	Classification: sanitary napkin machine (678.50)
08-05-81	801057	Classification: plastic articles with self adhesive bases (772.15, 790.55)
08-18-81	801066	Classification: waterproof roofing material (774.55)
08-06-81	801068	Classification: PVC roofing material reinforced with fiberglass scrim (774.55)
08-24-81	801073	Classification: tractors (692.34)
08-18-81	801089	Classification: harvade, a growth regulant and herbicide (429.60)
08-18-81	801098	Classification: man's woven synthetic jacket (380.04)
08-05-81	801101	Classification: copper cable scrap (612.10)
08-05-81	801102	Classification: ski glove liner (735.06)
08-11-81	801104	Classification: garden swing for children (727.55)
08-18-81	801119	Classification: wooden shelf (206.98)
08-28-81	801143	Classification: men's briefs and athletic supporter (376.24, 378.05)
08-19-81	801145	Classification: polyester material (389.62)
08-31-81	801166	Classification: hand crocheted cotton sweaters (382.00)
08-26-81	801173	Classification: shoes of canvas upper and rubber sole (700.59, 700.64)
08-28-81	801074	Classification: tissue soap or flat sheets of soap (466.10)
08-06-81	801080	Classification: women's casual shoe (700.51, 700.52, 700.53, 700.56, 700.57, 700.59)
08-19-81	801091	Classification: emergency spotlight (688.45)

Date of decision	File No.	Issue
08-05-81	801094	Classification: model remote control tank (685.60)
08-18-81	801099	Classification: bar code reader wand and dot matrix printer mechanism (676.52)
08-24-81	801114	Classification: tractor chassis (692.34)
08-18-81	801120	Classification: marble plate with wood stand (514.81)
08-18-91	801124	Classification: wooden shadow box (206.98)
09-03-81	801133	Classification: toy figure cartoon character (737.80)
09-03-81	801160	Classification: tractor models (692.34)
08-19-81	801168	Classification: bicycle rim strips (732.42)
08-19-81	801170	Classification: sun visor (382.33)
08-26-81	801177	Classification: pedicure pads (772.15)
08-26-81	801178	Classification: men's polyester shirt (380.04)
09-03-81	801184	Classification: tractor models (692.34)
08-31-81	801230	Classification: men's casual shoe (700.51, 700.52, 700.53, 700.56)
08-28-81	801191	Classification: ladies' knit shirt (382.78)
09-03-81	801195	Classification: cotton woven jacket (380.00)
08-24-81	801198	Classification: hair dressing appliance (684.50)
08-24-81	801224	Classification: infant boys' swim trunks (382.81)
08-24-81	801237	Classification: steel oil well casings (610.39, 610.40)
09-03-81	801245	Classification: wooden blanket handles (207.00)
09-03-81	801249	Classification: man's shirt (380.00)
09-01-81	801257	Classification: automated assembly equipment (678.50, 664.10, 683.95)
08-31-81	801270	Classification: mincer: handtool (651.47, 651.55)
09-03-81	801272	Classification: boys' knit shirt (380.00)
09-08-81	801301	Classification: soap/nail brush with plasic bracket (446.15, 772.15)

United States Court of International Trade

One Federal Plaza
New York, N.Y. 10007

Chief Judge

Edward D. Re

Judges

Paul P. Rao
Morgan Ford
Scovel Richardson
Frederick Landis
James L. Watson
Herbert N. Maletz
Bernard Newman
Nils A. Boe

Senior Judge

Samuel M. Rosenstein

Clerk

Joseph E. Lombardi

Decisions of the United States Court of International Trade

(Slip Op. 81–85)

PPG INDUSTRIES, INC., PLAINTIFF *v.* UNITED STATES; MALCOLM T. BALDRIGE, SECRETARY OF COMMERCE; LIONEL H. OLMER, UNDER SECRETARY FOR INTERNATIONAL TRADE, DEPARTMENT OF COMMERCE; DEFENDANTS

Before RAO, *Judge.*

Court No. 81–6–00733

On Defendants' Cross-Motion To Dismiss and Plaintiff's Opposition Thereto

[Defendants' cross-motion to dismiss granted.]

(Decided September 28, 1981)

Eugene L. Stewart (*Paul W. Jameson* and *Jeffrey S. Beckington* on the brief) for the plaintiff.

Stuart E. Schiffer, Acting Assistant Attorney General; *David M. Cohen*, Director, Commercial Litigation Branch, (*Francis J. Sailer* on the briefs) for the defendants.

RAO, *Judge:* This case involves the periodic review of an antidumping duty order on glass from Taiwan pursuant to section 751 of the Tariff Act of 1930, amended by the Trade Agreements Act of 1979, P.L. 96–39, 93 Stat. 144 (19 U.S.C. section 1675). The new antidumping duty provisions require that the Department of Commerce (hereinafter Commerce) conduct a periodic review, at least once during each calendar year, of previously issued antidumping orders in order to ascertain the amount of antidumping duties which should be assessed against relevant imports in the previous year and to establish the basis on which estimated deposits of antidumping duties will be collected during the ensuing year.

Commerce is required by the provisions of 19 U.S.C. § 1675(d) when it conducts an annual review, on the request of an interested party, to hold a hearing in accordance with 19 U.S.C. § 1677c(b), which requires notice in the Federal Register and a transcript which shall be made available to the public.

Commerce has promulgated regulations which provide that "[a] disclosure may be made, generally about 30 days prior to the date of the redetermination is due for publication, on request by interested parties * * * to the proceeding, * * * at which time written and oral views may be presented. *See* 19 CFR § 353.53(d), 45 Fed. Reg. 8182, 8205 (1980).

Plaintiff requested a disclosure conference on May 11, 1981. It was subsequently informed by the International Trade Administration (hereinafter ITA) officer handling the case that a disclosure conference in this case was not necessary since there had been no shipments of clear sheet glass from Taiwan for the period of July 1, 1979 though July 31, 1980, and the cash deposit margins preliminarily determined were arrived at based on the figures in the master list compiled by the Treasury Department for the period of July 1, 1974 to June 30, 1976.

Plaintiff's counsel renewed plaintiff's requests for a disclosure conference which were formally denied on May 19, 1981. On June 8, 1981, plaintiff filed a summons and complaint in this court requesting that a writ of mandamus be issued to compel the ITA to hold a disclosure conference as requested and also filed a motion for an order to show cause, a motion for a preliminary injunction, and a motion to shorten the time for defendants to answer the complaint. On June 19, 1981 defendants filed their opposition to plaintiff's motion for a preliminary injunction and a cross-motion to dismiss the complaint for failure to state a cause of action.

On July 6, 1981, Judge Landis denied plaintiff's motion for a prelim-

inary injunction and plaintiff's motion to shorten defendants' time to answer to complaint, but continued the motion to dismiss. *See* 1 CIT —, Slip Op. 81–59 (July 6, 1981). Plaintiff's opposition to defendants' cross-motion to dismiss was filed on July 23, 1981 and defendants' reply thereto was filed on August 6, 1981.

I

It is plaintiff's contention that this court has jurisdiction to require the ITA to hold the requested disclosure conference pursuant to 28 U.S.C. § 1581(i) which confers subject matter jurisdiction of any civil action commenced against the United States or its agencies arising from any law of the United States dealing with imports in this court. Additionally, plaintiff asserts that mandamus is an appropriate remedy to require the ITA to hold the requested disclosure conference as "final agency action," otherwise the ITA will continue to make its determination without ever having given plaintiff its requested disclosure.

Defendants claim that Commerce's decision on whether to grant disclosure is discretionary in that the regulations are not mandatory, but merely permissive; that the decision is a procedural consideration and that ITA's negative response to plaintiff's request is reviewable, if at all, in conjunction with review of its final determination as to the antidumping duties imposed or proposed in its annual review.

We agree that Commerce's decision was an interlocutory procedural decision reviewable under a section 516A review of the final results of the section 751 administrative review and should not be reviewed by this court at this time. A determination, other than those reviewable under 19 U.S.C. § 1516a(a)(1) by the administering authority under section 1675 for a twelbe month periodic review of an antidumping duty order is reviewable under 19 U.S.C. § 1516a(a)(2). All administrative or procedural actions taken by Commerce in the course of that review are interlocutory in nature. In the interests of efficient and expedient agency action, all matters having to do with the final determination should be reviewed at the same time, and not in a piecemeal fashion.

It may well be that plaintiff will find the determinations of the ITA with respect to the annual review satisfactory for the protection of its interests. In that event, Commerce's refusal to grant a disclosure conference would be, at most, error without injury. If, on the other hand, plaintiff appeals Commerce's determination with respect to the annual review to this court, that is the proper time to review all procedural and interlocutory decisions made with respect to that annual review.

The legislative history of the Customs Courts Act of 1980 lends support to this holding. Report No. 96-1235 of the House Committee on the Judiciary on H. R. 7540, 96th Cong., 2d Sess. (1980) states in part:

> The Committee intends that any determination specified in section 516A of the Tariff Act of 1930, or any preliminary administrative action which, in the course of proceeding, will be, directly or by implication, incorporated in or superseded by any such determination, is reviewable exclusively as provided in section 516A * * *.

Thus, while Congress contemplated that there would be some civil actions relating to an antidumping duty proceeding which could be heard pursuant to 28 U.S.C. § 1581(i), it intended that this section should not be used to permit the appeal of a procedural determination, but rather, that all procedural considerationss hould be decided by this court when the final agency determination is made.

II

Mandamus is an inappropriate remedy in this case. In *Canadian Tarpoly Co.* v. *U.S. International Trade Commission*, 640 F. 2d 1322, 1325 (1981), the Court of Customs and Patent Appeals reviewed the use of mandamus, stating:

> Mandamus is an extraordinary remedy, available only in extraordinary circumstances and when no meaningful alternatives are available [Citations omitted] * * * [A] court's power to issue a mandamus under the All Writs Act (28 U.S.C. § 1651(a)) is limited to situations in which such action is necessary or appropriate in aid of its jurisdiction.

Mandamus is inappropriate in the instant case as the cause of action which plaintiff attempts to bring is premature.

Additionally, there are meaningful alternative legal remedies which will be available here. If plaintiff feels adversely affected by the final determination in the final review, plaintiff can appeal to this court. It is well established that the extraordinary writ of mandamus cannot be used as a substitute for appeals. *Bankers Life & Cas. Co.* v. *Holland*, 346 U.S. 379, 383, 74 S. Ct. 145, 148, 98 L.Ed. 106 (1953).

It is therefore ordered and adjudged that defendants' motion to dismiss the complaint is granted, and

Plaintiff's motion for a writ of mandamus is denied.

PAUL P. RAO,
Judge.

Dated: New York, N.Y., September 28, 1981.

354-809 O - 81 - 4

(Slip Op. 81–86)

MELAMINE CHEMICALS, INC., PLAINTIFF *v.* UNITED STATES, DEFENDANT

Before LANDIS, *Judge*.

Court No. 80–6–00878

[Plaintiff's motion to supplement the agency record, denied.]

(Dated September 29, 1981)

Baker & McKenzie (*Bruce E. Clubb* on the brief) for the plaintiff.

J. Paul McGrath, Assistant Attorney General; *David M. Cohen*, Director, Commercial Litigation Branch (*Francis J. Sailer* on the brief), for the defendant.

LANDIS, *Judge*: In this antidumping action previously instituted pursuant to 19 U.S.C. § 1516a(a)(2)(B) plaintiff moves for an order to supplement the agency record by adding the International Trade Commission ITC) record in Investigation No. 731-TA-16, melamine in crystal form from the Netherlands.

In this action plaintiff has asked the court to review a final negative determination of the Commerce Department. This is one of the three cases involving the dumping of melamine in the United States. On November 13, 1979 Treasury published tentative affirmative determinations in the Austrian and Italian cases and a tentative negative determination in this case involving the Netherlands (44 Fed. Reg 65517). On January 1, 1980 the responsibility for the administration of the antidumping laws' less than fair value determination phase was transferred to the Department of Commerce. On February 26, 1980, Commerce published a Notice that it had found an error in Treasury's computations in the Netherlands case and that there was, in fact, sales at less than fair value. The Tentative Negative Determination was amended to an Affirmative Preliminary Determination (45 Fed. Reg. 12466).

On March 20 and 21, 1980, Commerce issued an Affirmative Final Determination in the three cases. (45 Fed. Reg. 18416, 20151, 20152). Meanwhile, the ITC initiated injury investigations in the Austrian and Italian cases effective January 1, 1980 and an injury investigation in the Netherlands case effective February 26, 1980 (Investigation No. 731-TA-16 (Final), 45 Fed. Reg. 17096). Hearings were held on April 11 and 12, 1980 in Washington.

On May 5, 1980 Commerce amended its original finding and published a Final Negative Determination in the Netherlands case (45 Fed. Reg. 29619). As a result of the withdrawal of the Final Affirmative Determination the ITC made no finding in the Netherlands case but found that there was no material injury in the Austrian and Italian cases (45 Fed. Reg. 31830).

Plaintiff argues that in order to assess the degree of prejudice which it suffered because of Commerce's withdrawal of its Final Affirmative Determination in the Netherlands case it is essential that the agency record to be reviewed by the court include the record of the proceedings before the ITC.

A review of the applicable law indicates that the scope of judicial review of a final negative determination by the Secretary of Treasury or the administrative authority pursuant to 19 U.S.C. § 1673d is whether the determination is supported by substantial evidence on the record or is otherwise not in accordance with law (19 U.S.C. § 1516a(b)(1)(B)). The action under review in this case is the Amended Final Determination of Sales at Not Less Than Fair Value by the administering agency (Department of Commerce) (45 Fed. Reg. 29619). The record for review consists of all information presented to or obtained by the Secretary of Treasury and the administering authority as well as all other items set forth pursuant to 19 U.S.C. § 1516a(b)(2).

The ITC preliminary determination proceedings commenced effective February 26, 1980, the date that the Commerce Department amended Treasury's Tentative Determination of Sales at Not Less Than Fair Value to an affirmative preliminary determination. Commerce's amendment prompted the ITC final investigation pursuant to section 735(b)(2) of the Tariff Act of 1930, as amended (19 U.S.C. § 1673d(b)(2)). On March 21, 1980 Commerce issued its Affirmative Final Determination in the Netherlands case. At this juncture the ITC investigation was continuing and hearings were held subsequently. Pursuant to section 735(b)(2) the ITC had until June 25, 1980 to issue a final determination. However, upon notification of Commerce's amended affirmative final determination to a negative final determination as to the Netherlands the ITC terminated its injury investigation as to that country. *No determination was made with respect to the injury phase of melamine from the Netherlands.*

The termination of the Netherlands investigation was proper and in accordance with the law. Section 735(b)(2) (19 U.S.C. § 1673d(b)(1)) directs the ITC to make a final material injury finding only where the administering authority has made a final affirmative determination pursuant to 19 U.S.C. § 1673d(a). This statutory interpretation becomes conclusively clear upon reading the House Report accompanying the Trade Agreements Act of 1979.

It states in part:

> If the Authority's final determination is negative, the proceeding terminates, as under present law, including any injury investigation being conducted by the ITC. * * * [H.R. Rep. No. 96–317, 96th Cong. 1st Sess. 68 (1979).]

Under the prior law, section 201 of the Antidumping Act of 1921, 19 U.S.C. § 160, the injury phase of an antidumping proceeding did not commence until the Secretary of the Treasury had made what amounts presently to a final determination. To expedite the investigations the Trade Agreements Act permits the injury investigation phase to commence immediately upon a *preliminary* finding of sales at less than fair value by the administering authority while shortening the time within which a final injury determination may be rendered (section 735(b)(2), Tariff Act of 1930, as amended, 19 U.S.C. § 1673d (b)(2)). There is no legislative intent indicating that because an injury investigation is permitted to commence prior to a final affirmative determination by the administering authority that the record made in the injury phase becomes part of the record in the less than fair value phase subject to judicial review simply because the investigations proceeded simultaneously.

The court is not unmindful of the broad and encompassing language that defines the record for review (19 U.S.C. § 1516a(b)(2)). The intent is that the court have a meaningful and comprehensive record before it on review with the express purpose of eliminating the necessity of a *de novo* review in antidumping actions. Congress believes that by affording petitioners greater participation and rights at the administrative level with a full record of proceedings it accomplishes this goal. This is evident from the Senate Report accompanying the Trade Agreements Act which states:

> Section 516A would remove all doubt on whether *de novo* review is appropriate by excluding *de novo* review from consideration a standard in antidumping and countervailing duty determinations. *De novo* review is both time consuming and duplicative. The amendments made by Title I of the Trade Agreements Act provide all parties with greater rights of participation at the administrative level and increased access to information upon which the decisions of the administering authority and the International Trade Commission are based. These changes, along with the new requirement for a record of the proceeding, have eliminated any need for *de novo* review.

S. Rep. No. 96-249, 96th Cong., 1st Sess. 251, 252 (1979). See also *ASG Industries, Inc.* v. *United States*, 67 CCPA ——, C.A.D. 1237, 610 F. 2d 770 (1979).

However, there is no discernible intent that the record for judicial review consist of unrelated proceedings not raised during the particular administrative action under review. The action for review here is only Commerce's amended Final Determination of Sales at Not Less than Fair Value. This is all the plaintiff seeks in its complaint. There has been no administrative decision regarding injury to a domestic industry that is subject to judicial review under the statute and thus no

claim upon which the court can grant relief. The fact that the ITC investigation concerning melamine from the Netherlands will be in issue in the Italian and Austrian cases is of no consequence to this case. Contrary to the instant action, those cases involve a final negative *injury* determination by the ITC which is subject statutorily to judicial review and which state claims upon which the court may grant relief.

Accordingly, plaintiff's motion to supplement the agency record is denied.

(Slip Op. 81–87)

RHONE POULENC, INC. AND RHONE POULENC S.A., PLAINTIFFS *v.* UNITED STATES, DEFENDANT

Before LANDIS, *Judge.*

Court No. 81–1–00079

Memorandum Opinion and Order

[Motion for protective order granted as indicated.]

(Dated September 29, 1981)

Donohue and Donohue (*Joseph F. Donohue* and *John M. Peterson* on the briefs) for the plaintiffs.

J. Paul McGrath, Assistant Attorney General; *David M. Cohen*, Director, Commercial Litigation Branch (*Velta A. Melnbrencis* on the briefs), for defendant.

LANDIS, *Judge:* This action, instituted pursuant to section 516A (a)(2) of the Tariff Act of 1930 as amended (19 U.S.C. § 1516(a)(2)) seeks judicial review of a less than fair value (LTFV) determination of the United States Department of Commerce, International Trade Administration (Commerce), (45 FR 77498), and a finding of a threat of material injury by the United States International Trade Commission (Commission) (46 FR 176) involving the alleged dumping of Anhydrous Sodium Metasilicate from France.

Plaintiffs move for an order granting access to the following confidential documents: Document Nos. 3(a), 5, 6(b), 7, 8(a), 8(d), 8(f), 8(g), 8(h), 8(i), 8(k), 8(l), 8(m), 8(n), 8(o), 8(q), and 10 listed on List No. 2, part of the administrative record filed with the Court in this case in connection with the United States International Trade Commission's Investigation No. 731–TA–25 (Preliminary); and Document Nos. 1, 2, 5, 6, 8, 9, 12, and 13(a) through 13(e), listed on List No. 2, part of the administrative record filed with this Court in this case in connection with the United States International Trade Commission's Investigation No. 731–TA–25 (Final).

Defendant cross-moves for a protective order and opposes plaintiffs' motion for disclosure of the documents aforementioned [1] on the grounds that plaintiffs have not demonstrated a need for these documents and that disclosure of the confidential business information may have a chilling effect on future Commerce and Commission investigations which rely heavily on confidential business information obtained by questionnaires.

The documents in issue report on the production of domestic producers, as such, the information contained therein is directly related to an assessment of whether there is material injury or a threat of material injury, and, consequently, germane to the major issues of the present action.

Accordingly, upon reading plaintiff's motion to examine confidential documents submitted to the court as part of the administrative record of the proceeding before the International Trade Commission and the opposition and cross-motion for protective order by the defendant United States, and plaintiffs' response to the cross-motion, if is hereby

1. ORDERED that said plaintiffs' motion and said defendant United States' cross-motion be, and the same hereby are granted to the extent indicated and subject to the terms and conditions set forth below; and

2. ORDERED that within fifteen (15) days from the date of entry of this order, the Clerk of this Court shall make available to plaintiffs' outside counsel, Donohue and Donohue, at the offices of the Clerk, for purposes of examining and copying, the following documents:

A. Documents Nos. 3(a), 5, 6(b), 7, 8(a), 8(d), 8(f), 8(g), 8(h), 8(i), 8(k), 8(l), 8(m), 8(n), 8(o), 8(q), and 10 listed on List No. 2, part of the administrative record filed with the Court in this case in connection with the United States International Trade Commission's Investigation No. 731–TA–25 (Preliminary); and

B. Documents Nos. 1, 2, 5, 6, 8, 9, 12, and 13(a) through 13(e), listed on List No. 2, part of the administrative record filed with the Court in this case in connection with the United States International Trade Commission's Investigation No. 731–TA–25 (Final).

3. Counsel for plaintiffs and their immediate office personnel shall neither disclose nor use any of the confidential information for purposes other than this litigation or (subject to continued safeguards to preserve confidentiality) any remand or appeal of this matter. Wherever used in this Order, the term "this litigation" shall be deemed to include remand or appeal resulting therefrom.

---

[1] The Government does not object to the release under protective order of documents 7 and 10 on List No. 2 in Investigation No. 731–TA–25 (Preliminary) or to the release under protective order of documents 1, 2 and 5 on List No. 2 in Investigation No. 731–TA–25 (Final).

4. If in the opinion of plaintiffs' counsel, it becomes necessary to consult with experts independent of the industry involved in evaluating the confidential information, counsel will not contact such experts without first notifying and conferring with counsel for defendant United States concerning the suitability of such experts. If after seven days following notification of defendant's counsel, counsel for the respective parties cannot agree upon a suitable expert, plaintiffs' counsel may submit the matter to the court for resolution. Such experts, once decided upon, shall agree not to disclose any of the confidential information to anyone other than to the counsel who consulted with them or counsel's office personnel actively assisting in this litigation, and then for purposes of this litigation only; and experts so consulted shall first sign a statement submitting themselves to the jurisdiction of the Court of International Trade and such reasonable sanctions as the court may hold appropriate in the event of a breach of the conditions of this protective order by them.

5. In no event shall disclosure of confidential information be made to in-house counsel or other representatives, agents, or employees of plaintiffs or the interested parties.

6. Counsel for plaintiffs shall maintain a record of any and all copies of confidential information made, to whom they are provided and when they are returned. All such copies shall be clearly labelled as containing confidential information and that they are to be returned at the conclusion of this litigation.

7. Any documents, including briefs and memoranda, containing any of the confidential information, which are filed with the court in this case, shall be conspicuously marked as containing information which is not to be disclosed to the public, and arrangements shall be made with the Clerk of this Court to retain such documents under seal, permitting access only to the court, court personnel authorized by the court to have access, and counsel for the parties. Copies of all the foregoing documents, but with the confidential information deleted, shall be filed with the court at the same time that the documents containing the confidential information are filed.

8. Any briefs or memoranda containing confidential information shall be served upon the other parties in a wrapper conspicuously marked on the front "Confidential—to be opened only by (the name(s) of the attorneys handling the case)" and shall be accompanied by a separate copy from which the confidential information has been deleted.

9. Upon conclusion of this litigation or any appeal or remand of this matter, counsel for plaintiffs and the interested parties shall (a) return all copies of the confidential documents obtained under this Order and the record required to be maintained under paragraph 6 above; and (b) destroy all other documents (including documents

held by persons authorized under this Order to have access thereto) containing the confidential information.

(Slip Op. 81–88)

ASG INDUSTRIES, INC., ET AL., PLAINTIFFS v. UNITED STATES, DEFENDANT

Before LANDIS, *Judge.*

Court No. 76–3–00642

Memorandum Opinion and Order

[Defendant's motion to dismiss is denied. Plaintiffs' cross-motion to suspend is denied.]

(Dated September 29, 1981)

Frederick L. Ikenson for the plaintiffs.

J. Paul McGrath, Assistant Attorney General; *David M. Cohen*, Branch Director; *Joseph I. Liebman*, Attorney in Charge, International Trade Field Office, Commercial Litigation Branch (*David M. Cohen* on the brief), for the defendant.

LANDIS, *Judge:* In this countervailing duty action involving float glass from the United Kingdom defendant has moved this Court to dismiss the case with a judgment ordering the administering authority (Secretary of Commerce) to determine, ascertain or estimate the net amount of the bounties or grants bestowed upon the manufacturer of float glass by the United Kingdom and to levy a countervailing duty equal to such net bounty or grant on such importation of float glass. Plaintiffs have opposed said motion to dismiss and have cross-moved to suspend the subject action under *ASG Industries, Inc., et al.*, Customs Appeal 81–25.

Plaintiff's cross-motion to suspend is denied as moot in view of Customs Appeal No. 81–25 which was decided by the Court of Customs and Patent Appeals on August 21, 1981. This recent appellate ruling is dispositive of defendant's motion to dismiss.

Customs Appeal 81–25 an appeal of an order accompanying Slip Op. 81–34 (April 24, 1981) which had dismissed a related float glass action [1]

[1] The remand in this action (C.A.D. 1238) was issued simultaneously with and for the same reasons stated in C.A.D. 1237 although the Customs Court opinions differed in reasoning. C.D. 4782, the subject of appeal in C.A.D. 1237, found that a bounty or grant was bestowed but affirmed the finding of the Secretary of the Treasury that such bounties or grants did not tend to distort international trade and did not discriminate against the United States' production and sales both foreign and domestic. In C.D. 4788, the subject of appeal in C.A.D. 1238, this Court held that the decision of the Secretary was reasonable in that the Secretary must exercise some discretion in defining what acts of a foreign government confer bounties or grants and that this discretion necessarily involves judgments in the political, legislative or policy spheres. See generally, *United States v. Hammond Lead Products, Inc.*, 58 CCPA 129, C.A.D. 1017, 440 F. 2d 102 (1971), cert. denied, 404 U.S. 1005 (1971).

C.A.D. 1237 directly addressed only the distortion to trade theory. However, by implication it also found fault with the discretion theory as to political, legislative or policy sphere judgments.

and remanded said action to the Secretary of Commerce to ascertain the amount of countervailing duties to be imposed. In reversing, the appellate court clarified its decision in *ASG Industries, Inc., et al.* v. *United States*, 67 CCPA ——, C.A.D. 1237, 610 F. 2d 770 (1979), particularly its remand for a trial *de novo* "so that the merits of the issue of the amount of the net bounty herein involved can be fully developed", by stating that the U.S. Court of International Trade should conduct a full development of the net bounty issue including the quantification methodology from the accounting standpoint used in determining the net bounty or grant. The recent decision in Customs Appeal No. 81–25 in pertinent part states:

> * * * It was this court's intention that such full development of the net bounty issue should take place in the court, not that it be turned over with no restraint whatsoever to the administering authority, now the Commerce Department. [Slip Op. at 6.]

It is clear that this Court must conduct a trial *de novo* to determine the amount of net bounty including the method by which it is to be determined, in essence, the amount of countervailing duty to be imposed per unit of float glass.

Accordingly, it is

ORDERED that defendant's motion to dismiss is denied, and, it is

FURTHER ORDERED that plaintiffs' cross-motion to suspend is denied; and, it is

FURTHER ORDERED that the parties submit within thirty (30) days of the entry of this Order an agreed date for the commencement of the trial *de novo* of this action as mandated by the Court of Customs and Patent Appeals.

(Slip Op. 81–89)

TERUMO-AMERICA, INC., PLAINTIFF *v.* UNITED STATES, DEFENDANT

Before RE, *Chief Judge.*

Court No. 78–5–00812

Glass rods (stems)

Some 224,000 pieces of merchandise described on the customs invoice as "glass rods (stems)", dedicated to use as clinical thermometers and incapable of being made into anything else, but which had not attained an individuality as finished or unfinished thermometers, were not properly classified as clinical thermometers under TSUS item 711.34, as modified by T.D. 68–9. Since the glass rods had not reached the state of processing to make them unfinished

thermometers, they were properly classifiable as other tubes or tubing with ends processed, not containing over 95 percent silica by weight, under TSUS item 548.03, as modified.

[Classification overruled; plaintiff's alternative claim and defendant's alternative claim under TSUS item 548.03 upheld.]

(Decided September 30, 1981)

Glad, Tuttle & White (*Robert Glenn White* at the trial and on the briefs), for the plaintiff.

J. Paul McGrath, Assistant Attorney General; *Joseph I. Liebman*, Attorney in Charge, International Trade Field Office, Commercial Litigation Branch (*John J. Mahon* at the trial and on the brief; *Melvin E. Lazar*, International Trade Litigation, United States Customs Service, of counsel, at the trial and on the brief), for the defendant.

RE, *Chief Judge:* The question presented in this case pertains to the proper classification of certain merchandise described on the customs invoice as "glass rods (stems)" used in the manufacture of clinical thermometers. It must be noted at the outset that the merchandise, the classification of which is in issue, consists of glass rods or stems in lengths of approximately 120 centimeters, or 48 inches long, which may vary from 3 to 4 inches in length. These rods are exemplified by plaintiff's collective exhibit 1. They are the only merchandise in issue and are not to be confused with plaintiff's collective exhibit 2, which consists of approximately 5-inch pieces that have been cut from the rods after importation.

The imported glass rods were classified by the customs officials as clinical thermometers under item 711.34 of the Tariff Schedules of the United States (TSUS), as modified by T.D. 68–9, and assessed with duty at the rate of 42.5 percent ad valorem.

Plaintiff, a manufacturer of medical products, contests the classification and, consequently, the rate of duty assessed. It claims that the merchandise is properly classifiable as other glass rods or tubes, not processed, not containing over 95 percent silica by weight, under item 540.43, TSUS, as modified by T.D. 68–9, with a rate of duty of only 16 per centum ad valorem. If not classifiable under item 540.43, TSUS, plaintiff claims in the alternative that the merchandise should be classified as tubes and tubing with ends processed, not containing over 95 percent silica by weight, under item 548.03, TSUS, as modified, dutiable at 16 per centum ad valorem; or as articles of glass not specially provided for, other than tubes with ends processed, under item 548.05, TSUS, as modified, and dutiable at 12.5 per centum ad valorem.

Originally, plaintiff also claimed classification under item 540.41 or item 548.01, TSUS, as modified, but those claims were abandoned.

The defendant maintains that the glass rods have been properly classified. However, if it is determined that they are not unfinished thermometers, the defendant contends that they should be classified, alternatively, as other tubes and tubing with ends processed under item 548.03 of the tariff schedules, with duty at 16 per centum ad valorem. This is apparently the first case in which the issue arises under the Tariff Schedules of the United States, rather than under the older tariff acts.

The competing provisions of the tariff schedules read as follows:

[Classified]		
	"Hydrometers and similar floating instruments * * *:	
	Thermometers * * *:	
	Non-recording instruments:	
	Thermometers:	
	Liquid-filled thermometers with the graduations on the tube or on a scale enclosed within an outer shell:	
711.34	Clinical	42.5% ad val."
[Plaintiff's primary claim]		
	"Glass rods, tubes, and tubing, all the foregoing not processed:	
	* * * Containing over 95 percent silica by weight	* * *
540.43	Other	16% ad val."
[Plaintiff's and defendant's alternative claim]		
	"Articles not specially provided for, of glass:	
	Tubes and tubing with ends processed:	
	* * * Containing over 95 percent silica by weight	* * *
548.03	Other	16% ad val."
[Plaintiff's alternative claim]		
548.05	Other	12.5% ad val.

General Headnotes and Rules of Interpretation, TSUS:

"10. *General Interpretative Rules.* For the purposes of these schedules—

* * * * * * *

(h) unless the context requires otherwise, a tariff description for an article covers such article, whether assembled or not assembled, and *whether finished, or unfinished;*" (Emphasis added.)

It has been established that the merchandise: (1) is in chief value of glass; (2) does not contain over 95 percent silica by weight; (3) is in lengths of approximately 120 centimeters, or 48 inches long; and (4) is used and dedicated to the making of thermometers.

Plaintiff maintains that in customs law, "material" although dedicated to a single use is not to be classified as an unfinished *eo nomine* article unless it has been so advanced as to have attained an individuality which identifies it as one of the named articles. *Bendix Mouldings, Inc.* v. *United States*, 73 Cust. Ct. 204, 205, C.D. 4576, 388 F. Supp. 1193 (1974), *appeal dismissed*, 62 CCPA 109 (1975). See also *Pacific Fast Mail, Inc.* v. *United States*, 63 Cust. Ct. 468, C.D. 3938 (1969). In essence, plaintiff contends that the imported 48-inch-long tubes are not unfinished thermometers, but merely "material" from which thermometers are made by cutting, and by many additional manufacturing processes. In support of its contention, plaintiff states that the importations are not sufficiently advanced for the following reasons:

> (a) as imported, the number of clinical thermometers that can be made from the given shipment cannot be identified,
> (b) extensive and costly further processing is necessary to make the glass rods in issue into finished clinical thermometers,
> (c) the configuration and capillary size of the articles do not preclude classification as glass rods or tubes, and
> (d) heat sealing of the ends is not a processing that advances the articles toward their ultimate use.

Plaintiff submits that the imported glass rods have not attained an individuality as unfinished clinical thermometers; that the imported glass articles are rods and tubes; and that the ends of the glass rods are not "processed" as this term is used in the tariff schedules. The defendant submits that the imported merchandise has attained an individuality which identifies it as unfinished thermometers.

In the *Bendix Mouldings* case, cited by both parties, the merchandise consisted of wood moldings whose surface had been treated in various ways. The moldings were generally imported in 9-foot lengths, and possessed a recessed groove, known as a rabbet, cut into the rear inner edge of the molding. The rabbet was designed to hold a picture or mirror within the frames. After importation, the articles were cut and joined to form picture or mirror frames. As imported, however, the moldings gave no indication of the individual identity or size and shape of any particular frame. Hence, it was held that the imported moldings were not unfinished frames, and were properly classified as other wood moldings under TSUS item 202.66, rather than as picture and mirror frames under TSUS item 206.60. After studying past

case law, Judge Watson concluded that certain useful guidelines had emerged as to when a "material" became an "article":

> "With respect to importations which are in a form dedicated to a certain use but from which the claimed individual articles have not yet fully emerged, to my mind the underlying question is whether the identity of an actual individual article can somehow be discerned." 73 Cust. Ct. at 205.

The court also cited a number of early relevant cases. For example, in *In Re Mills*, 56 F. 820 (S.D.N.Y. 1893), certain lengths of fabric were held to be improperly classified as partly made wearing apparel and were held dutiable as manufactures of cotton. The court stated that" * * * it must at least be made up sufficiently far to enable us to identify the particular article of wearing apparel that is going to be made out ot it." *Id.* at 821.

The "rule of decision" for these cases was articulated in *United States* v. *Buss & Co.*, 5 Ct. Cust. Appls. 110, 113, T.D. 34138 (1914):

> "[M]ost small articles are not produced as individual or separate products of the loom, but for economy of manufacture are first woven 'in the piece.' The rule of decision is therefore established that where such articles are *imported in the piece and nothing remains to be done except to cut them apart* they shall be treated for dutiable purposes as if already cut apart and assessed according to their individual character or identity. This follows, however, *only in case the character or identity of the individual articles is fixed with certainty* and in case the woven piece in its entirety is not commercially capable of any other use." (Emphasis added.)

Under the *Buss* case, therefore, the test to be applied to articles "imported in the piece" is whether "nothing remains to be done except to cut them apart," and if "the character or identity of the individual articles is fixed with certainty." In the case at bar, surely much more remained to be done than merely to cut apart the imported 48-inch-long glass rods before the "identity of the individual [pieces] is fixed with certainty" as unfinished thermometers.

In *Pacific Fast Mail, Inc.* v. *United States*, 63 Cust. Ct. 468, C.D. 3938 (1969), wherein certain "rail" was found not to meet the criteria necessary to be an unfinished article, this court stated:

> "We * * * find that the rail is not unfinished track. The fact that the former is dedicated to use in the construction of track is a helpful, but not the sole, criterion for determining whether it is that article in its unfinished state. *American Import Co.* v. *United States*, 26 CCPA 72, T.D. 49612 (1938); *The Harding Co. et al.* v. *United States*, 23 CCPA 250, T.D. 48109 (1936); *United States* v. *The Harding Co.*, 21 CCPA 307, T.D. 46830 (1933). Does the rail possess the shape, size, and all of the necessary characteristics of unfinished track, *Nyman & Shultz* v. *United States*, 14 Ct. Cust. Appls. 432, 437, T.D. 42060 (1927); is it so far ad-

vanced that it has an individuality which identifies it in its unfinished state as the thing it would be when finished, *Snow's United States Sample Express Co.* v. *United States*, 8 Ct. Cust. Appls. 17, 21, T.D. 37161, (1917); does it have even the 'elementary form and substance' of track so that *it has reached the point in the manufacturing process where it has become that article in 'name and character'*, *Redden & Martin* v. *United States*, 5 Ct. Cust. Appls. 485, 487, T.D. 35147 (1915)?

The importation meets none of the foregoing criteria: the sample rail in evidence is mute but potent witness to the fact that it possesses neither the shape, size, nor other characteristics which would identify it as track; and *the lengthy, detailed steps involved in constructing track from rail cogently illustrate that the latter has not reached the point where it may be considered track in the unfinished state.*

The rail stands in marked contrast to those commodities which this court and our court of appeals have held * * * to be 'unfinished' articles by reason of their being so far advanced toward their final form and shape that their ultimate purpose and use were self-evident." 63 Cust. Ct. at 472–473. (Emphasis added.)

In the present case, it is clear that the imported 48-inch-long glass rods had not "reached the point in the manufacturing process" that they had become "in name and character" clinical thermometers. They had not attained an individuality which identified them as unfinished thermometers, but were the "material" used in the manufacture of clinical thermometers.

The defendant stresses that the imported merchandise is dedicated to use as clinical thermometers and is incapable of being made into anything else. This, however, does not necessarily establish that the imported "material" is to be classified as an *eo nomine* article. It is well established that the mere fact that imported merchandise is dedicated to use in making particular articles or parts does not take the merchandise out of the class of "material." *Bendix*, 73 Cust. Ct. at 205. See also *The Harding Co.* v. *United States*, 23 CCPA 250, T.D. 48109 (1936) (automobile brake lining); *American Import Co.* v. *United States*, 26 CCPA 72, T.D. 49612 (1938) (fishing leader gut); *Overton & Co.* v. *United States*, 85 Cust. Ct. 76, C.D. 4875 (1980) ("Jordan bars").

At trial, plaintiff called Mr. Kum Tanaka, its administrative manager. Defendant's witnesses were Mr. Jonathan Tobelmann, marketing manager for tubing products, Corning Glass Works, and Mr. William Pymm, vice president of Pymm Thermometer Corp., a manufacturer of clinical thermometers.

In addition to plaintiff's collective exhibit 1, illustrative of the merchandise in issue, numerous exhibits (14 for plaintiff and 10 for defendant), were received in evidence. Among the exhibits carefully examined by the court were glass tubing, a variety of thermometers,

and catalogue sheets pertinent to the manufacture of thermometers. The court also examined with care plaintiff's collective exhibit 2, consisting of the approximately 5-inch pieces of tubing that were cut from the glass rods after their importation. From the testimony of record, it is clear that although seven to nine pieces were usually cut from the 48-inch glass rods after their importation, it was not always possible to determine the exact number that could be cut from each rod, nor the type of thermometer for which the glass rods were best suited.

As imported, the 48-inch glass rods, which were shaped in the form of a prism, contained three sides. One side, which had a white back, was longer than the other two which sometimes were equal in length. The ends were sealed in the process of being cut in order to keep out dust and moisture. No scales or markings appeared on the outside of the glass rods at the time of importation.

Mr. Tanaka, who testified that he was aware that the physical characteristics of the imported glass rods differed from other tubing, described the major processes involved in manufacturing the imported merchandise into a finished thermometer. The glass rod is initially inspected for cleanliness and cracks, and is then cut into lengths. Although seven to nine pieces may be cut, Mr. Tanaka testified that "what is ultimately produced as a thermometer cannot be determined." In addition to a loss factor from waste and breakage, he added that "[i]t cannot be readily defined, as far as how many thermometers can be made from any single stem * * * because there are many functions involved in the production of thermometers."

A bulb is then formed in the glass, and then cut in half to create a shoulder for its attachment. The bulb material is then fused onto the stem material. Mr. Tanaka described the function of the bulb in a finished thermometer as the end which will eventually be formed as a cavity for the mercury. He explained that there were different sizes of bulb glass because there were different types of thermometers, i.e., oral, rectal, ovulation and veterinary. The bulb determines the type of thermometer. There is a capillary within the glass that runs the length of the glass. The capillary, contained within the stem material, is the approximate diameter of one hair. When the diameter is constricted, one further reduces the one-hair diameter to approximately one-tenth of that size. The capillary will also determine the type of thermometer.

Mr. Tanaka explained that constriction is the heart of a clinical thermometer which is being designed to measure maximum temperature. When the temperature reaches 98.6 degrees, it remains there until forcibly shaken down. Plaintiff's exhibit 5, the witness said, is a glass tube that illustrates constriction. Mr. Tanaka also stated that

the number of pieces cut from the imported glass rods could be affected by defects in the constriction which would make it impossible to manufacture a clinical thermometer.

After constriction, the thermometer is processed through an alcohol injection machine. The alcohol is poured into the bulb of the thermometer and measured electronically by computer to determine the amount of mercury that will be injected into the stem.

Terumo-America then determines the ultimate size into which the bulb will be cut. The process in forming the bulb or bubble consists of heat sealing the ends and using micrometer adjustments to determine exactly where the thermometer will be cut after it has been injected. The bubble piece is cut and the bubble end of the stem is sealed. Depending upon the thermometer, the bulb will either be inserted into the mouth or rectum. Mr. Tanaka examined collective exhibit 6, consisting of samples of oral and rectal thermometers, and identified the oral thermometer as the one with the longer bubble.

After the bubble is formed, the thermometer is aged in an oven for 24 hours by controlled heat and time adjustments. Terumo-America distills and purifies the mercury that it has purchased by a heat application. At this juncture, the mercury is injected through the open end capillary by vacuum. The end without the bulb is sealed. A calibration process is begun whereby the thermometer is required to have between 106 and 108 degrees of mercury to meet certain required standards of the States of Michigan, Connecticut, and Masssachusetts. Mr. Tanaka said there were no federally mandated standards.

Mr. Tanaka's testimony, which the court finds credible and reliable, fully supports plaintiff's contentions that the merchandise, as imported, was mere "material" dedicated to the making of thermometers. The testimony makes it clear that, even after being cut into 5-inch pieces, before becoming a finished thermometer the imported "glass rods (stems)" must undergo the following additional steps:

(a) Reverse spinning centrifuge
(b) Inspection of constriction
(c) Cut off end by heat applications
(d) Run through a conveyor to pull the mercury down
(e) Heat application
(f) Calibration
(g) Printing
(h) Placement in a baking conveyor to burn ink into the glass permanently
(i) Acid washed
(j) Set checkpoints
(k) Final inspection

Mr. Tanaka concluded that, in view of the many additional necessary manufacturing processes, the merchandise, as imported, i.e., the

48-inch glass rods, had not reached a state of processing for it to be an "unfinished thermometer."

The defendant's first witness, Mr. Jonathan Tobelmann, was familiar with various stages in the production of clinical thermometers. He had visited most of the plants of clinical thermometer manufacturers in the United States, except Terumo-America, Inc., and one other small manufacturer. Upon being shown collective exhibit 1, illustrative of the merchandise in issue, Mr. Tobelmann said that he was familiar with the merchandise, and that Corning had manufactured tubing for the thermometer industry which was very similar to the imported merchandise. He also testified that his company is able to manufacture tubing of the same dimensions, and identified defendant's collective exhibit A as sticks of tubing that Corning sells to clinical thermometer manufacturers in the United States. Its tubing is 37, 45, 52 inches, or a little longer, and can be produced with different diameters and ends sealed or unsealed. Sealing is done to protect the bore from dirt or moisture.

Mr. Tobelmann described plaintiff's collective exhibit 1 as a stick of thermometer tubing, which is the first step in making a clinical thermometer. The witness described how Corning's thermometer is manufactured:

> In manufacturing our own thermometer, in the tubing that I had seen, it is a one-step process. It's a completely automated process where the raw material goes into one end and the finished thermometer tubing is drawn out the other end and is cut to lengths and fire-polished or unfire-polished and then packaged. There are no subsequent steps of putting it all together.

Mr. Tobelmann testified that there were other methods, i.e., the hand method, as well as the semiautomated vertical method, which are still in use in some places in the world.

Defendant's second witness, Mr. William Pymm, in addition to being vice president of Pymm Thermometer Corp., was also associated with Pak Glass Machinery Corp., a manufacturer of specialized equipment for the clinical and industrial thermometer industry. He examined both plaintiff's collective exhibit 1 and defendant's collective exhibit A, which were pieces of Corning glass tubing, and testified that these exhibits looked identical except as to dimensions, the outside dimensions of plaintiff's collective exhibit 1 being thicker. Both exhibits have a prismatic shape, a white enamel backing, a bore, clear glass lens which magnifies the bore, and a sealed end. Mr. Pymm explained that the sealed end signifies that the ends were fire sealed with a flame which prevents dirt or moisture from entering the bore and protects the glass inside.

Although the tariff schedules do not define either a finished or an

unfinished thermometer, both of which are subject to classification under item 711.34 in accordance with General Interpretative Rule 10(h), the *Summaries of Trade and Tariff Information* state the following in Schedule 7, vol. 2 at 181–182 (1970):

> "A typical finished clinical therommeter consists of a glass capillary tube approximately 4 inches long to which is attached a small glass bulb. The opening of the bulb connects with one end of the bore of the tube; the other end of the bore is sealed. Mercury is sealed in the bulb and part of the tube. Magnification properties of the tube, resulting from the prismatic construction of its walls, enables the column of mercury to be read in conjunction with an engraved scale on the tube's surface. An enamel strip, usually white, is embedded in the glass to serve as a contrasting background for the mercury column. Thermometers used in the United States are usually calibrated in degrees and fifths of degrees, Fahrenheit, with a scale ranging from 96° to 106°. Clinical thermometers are made from several varieties of lens clinical tubing.
>
> In use, the bulb end of the thermometer is inserted into a body cavity where heat from the body causes the mercury column to rise until the highest temperature to which the thermometer is exposed is reached. By means of a constriction in the bore of of the tube, the expanded column is prevented from contracting back toward the bulb. Before reuse, the thermometer must be reset by shaking the mercury to a point several degrees below normal body temperature.
>
> Other types of clinical thermometers are those for veterinary use and basal thermometers. The former are used for measuring the temperature of large animals; the latter for ovulation tests. These two types, however, account for an extremely small percentage of clinical thermometers sold in the United States."

Prior to the adoption of the tariff schedules, clinical thermometers were classified under paragraph 218(a) of the Tariff Act of 1930. That paragraph was pertinent to the decision of this court in *Empire Findings Co.* v. *United States*, 57 Cust. Ct. 412, C.D. 2830, 260 F. Supp. 884 (1966) wherein the court reviewed the process of manufacturing a finished thermometer as follows:

> [T]he production of glass clinical thermometers starts with blown or drawn glass tubing or "cane." This is filled with mercury and cut into lengths. The mercury is withdrawn and measured to classify the tube by bore size. A small blister is blown into the tube near one end and the end is pinched off. Bulb tubing is joined to the opening. *A part of the imported merchandise * * * is in the state of advancement now attained.* Subsequently the tube is filled with mercury. The mercury is drawn into the end opposite the bulb and the constriction is put in which keeps the mercury from falling back after removal from the patient's mouth until the instrument is read and shaken down. The constriction properly placed, the mercury is returned by shaking, to the bulb. * * * The

> next operations are for getting gas out of the tube. It is separated from the mercury and driven up to the head, by various methods. Next, the instrument is placed in 160° water to test if the column rises the proper distance from the top and from the bulb. The tube is then sealed and the top chamber removed. *The result is known as a blank.* The blanks are immersed in water at 98° and 106° Fahrenheit, and the column level marked with ink. The blank is tested for presence of air by driving the mercury column to the top. It is coated with wax and engraved with the temperature locations. Scratches through the wax are made which are then marked with acid. It remains to dip in ink for the colored markings on the completed instrument. 57 Cust. Ct. at 415. (Emphasis added.)

In *Empire* the issue was whether certain merchandise was unfinished glass clinical thermometers under paragraph 218(a) of the Tariff Act of 1930, as classified, or glass tubes, rods, canes, and tubing under paragraph 218(b) of that act, as alternatively claimed. In holding the imported merchandise to be unfinished glass clinical thermometers, as classified, the court stated that "[t]he samples, as 'potent witnesses' tell us here that the so-called 'shaped glass capillary tubings' look and are shaped like clinical thermometers and obviously have been *advanced far beyond suitability for any other use.*" *Id.* at 417. (Emphasis added.)

In the present case, at the time of importation the merchandise consisted of 48-inch-long glass rods, represented by plaintiff's collective exhibit 1, and not 6- or 7-inch glass tubes as in *Empire.* Unlike the present case, the merchandise in *Empire*, in addition to having been cut prior to importation, had been "advanced far beyond suitability for any other use." The glass rods here were "material" which required further processing to attain the individuality of the glass tubes in *Empire*, and, as imported, surely were not thermometer "blanks."

According to the United States Tariff Commission's *Report to the President on Investigation No. TEA–1A–1 Under Section 351(d)(2)(5) of the Trade Expansion Act of 1962* (T.C. Publication 90, May 1963, at 10), the manufacture of clinical thermometers has two distinct phases:

> "The first, the manufacture of the thermometer blank, comprises more than 100 operations; the second consists of 25 or more finishing operations involved in making the temperature scale (determined separately for each thermometer because of slight variations in the dimension of the bore of the tubing), engraving, pigmenting, and testing. Until recently, clinical thermometers were manufactured almost entirely by hand. During the last several years, however, a number of the larger producers have, at substantial expense, successfully mechanized certain of these manual operations."

Unfinished thermometers are also discussed in the *Report*, *supra* at 11, n.2:

> "Unfinished thermometers are known in the trade as blanks. A complete thermometer blank is a blank that has been processed up to but not including calibration, engraving, pigmentation, and testing. An incomplete thermometer blank is a blank that must be further processed before it can be calibrated, engraved, and so forth."

Plaintiff's witness, as well as defendant's witness, Mr. Pymm, testified in detail as to the time, effort, and cost required to process the imported merchandise into thermometers. Although dedicated to the use of making thermometers, much more remained to be done than merely to cut the imported rods and to identify them as unfinished thermometers. Furthermore, although the merchandise may be "part" of a clinical thermometer, it cannot be classified under item 711.34 since that item does not encompass "parts" of clinical thermometers. As mere "material," though dedicated to use as a clinical thermometer, the merchandise, as imported, was not sufficiently advanced or processed to be classified as an unfinished thermometer.

From the foregoing, and upon a careful examination of the imported merchandise as a "potent witness," the exhibits, and the testimony of the witnesses, the court has concluded that the imported merchandise is not an unfinished clinical thermometer. It is, therefore, the determination of the court that it was improperly classified as clinical thermometers under item 711.34 of the tariff schedules.

Having determined that the assigned classification under item 711.34 of the tariff schedules is erroneous, the court will consider whether the imported merchandise falls within any of the alternate provisions claimed. Although classification has been urged under items 540.43 and 548.03, the parties have cited no cases directly in point as to whether the glass rods are tubes or tubing. The tariff schedules do not define tubes, and the *Tariff Classification Study, Explanatory and Background Materials* (1960) fails to shed light on this question. As previously noted, however, the *Summaries of Trade and Tariff Information* describe a clinical thermometer as consisting of "a glass capillary tube" and refers to tubes and tubing. Schedule 7, vol. 2 at 181–182 (1970). In addition, the record contains much supporting testimony which refers to the imported merchandise as "tubing." Mr. Tobelmann of Corning Glass Works not only stated that the imported merchandise was very similar to the "tubing" manufactured by Corning for the thermometer industry, but also that Corning sold clinical thermometer "tubing" to every United States manufacturer of clinical thermometers. There is no question,

therefore, that the original material for a clinical thermometer starts with a "tube." From the testimony of record, and a visual examination of the exhibits, the court concludes, therefore, that the "imported glass rods (stems)" are glass tubes or tubing used in the manufacture of clinical thermometers.

Having determined the imported merchandise to be tubing, the court must also determine whether, for tariff purposes, the ends of the glass tubing have been processed. Plaintiff correctly indicates that neither the tariff schedules nor the *Tariff Classification Study, Explanatory and Background Materials*, Schedule 5 (1960), offers a clear statement of what is meant by the term "processed" in the prefatory headings to items 540.43 and 548.03. Although the ends of the glass were sealed, plaintiff alleges that the ends were not processed, as that term is used in the tariff schedules, since the processing in question must advance the glass rod or tube "to its final, intended use." Instead, plaintiff submits that the ends were sealed "for protection for transportation purposes only."

It is defendant's contention, however, the ends are processed since the flame sealing is done to keep the capillary bore clean to facilitate the insertion of mercury, a necessary element in the use and function of finished clinical thermometers. Mr. Tobelmann, who testified that his company, Corning Glass Works, seals its tubing to protect the bore from dirt or moisture, also testified that the word, "processing," when referring to glass tubing, means "the working of the glass after the tubing is made." In describing the cutting as part of the process in order to make the glass tubing, he recalled the various processes used by Corning:

> In tubing, we take sand and lead, and many other components, and we process that glass, and/or material, and change it into some form, and in that same process, we put the white backing, and other things, and then we cut it. And it's considered to be the same process. And then we could seal it, and that could be another process.

Since plaintiff's witness, Mr. Tanaka, testified that the ends of Corning glass were similar to those of Terumo, and that Terumo's glass contained a white backing, it is reasonable to conclude that the imported merchandise must also have undergone a cutting and sealing process similar to Corning's glass tubing.

It is also relevant to note that the *Tariff Classification Study, supra* at 127, states that item 540.43 "cover[s] glass rods, tubes, and tubing which have not been processed, i.e., the articles have unsmoothed ends and are otherwise unworked."

From the foregoing, the court concludes that the flame sealing of ends of the glass rods or tubing was not merely "for protection for transportation purposes only," but also advanced the merchandise

to its final, intended use as clinical thermometers. Consequently for tariff purposes, the imported glass rods were glass "tubes and tubing with ends processed."

It is, therefore, the determination of the court that the imported merchandise was erroneously classified as clinical thermometers under TSUS item 711.34, and should be properly classified under TSUS item 548.03, as modified, as glass tubes and tubing with ends processed, not containing over 95 percent silica by weight, with duty at the rate of 16 percentum ad valorem.

Having determined the merchandise is properly classifiable under TSUS item 548.03, as modified, it is unnecessary for the court to consider plaintiff's alternative claim under TSUS item 548.05, as modified.

Judgment will be entered accordingly.

(Slip Op. 81-90)

INTERCONTINENTAL FIBRES, INC., PLAINTIFF *v.* UNITED STATES DEFENDANT

Court Nos. 73-7-01954, 74-5-01287

Memorandum Opinion and Order On Plaintiff's Motion for Rehearing and To Vacate and Set Aside an Order of Dismissal

(Dated October 1, 1981)

WATSON, *Judge:* Plaintiff has moved under Rules 59 and 60 for a rehearing and for relief from the order dismissing these actions for lack of prosecution.

These cases were dismissed for lack of prosecution on August 12, 1981, under Rule 85.[1] That rule provides for the dismissal of suspended

[1] Rule 85. Suspension Disposition Calendar:

(a) Suspension Disposition Calendar. A Suspension Disposition Calendar is established on which an action which was suspended under a test case shall be placed after the test case is finally determined, dismissed or discontinued.

(b) Time—Notice. An action may remain on the Suspension Disposition Calendar for a period to be established by the judge to whom the action was assigned, or by the judge who decided the test case. This period shall not exceed 18 months from the time the action is placed on the Suspension Disposition Calendar. The clerk shall notify the parties of the date on which the action will be dismissed for lack of prosecution unless removed from the Suspension Disposition Calendar.

(c) Removal From Calendar. An action may be removed from the Suspension Disposition Calendar upon: (1) filing of a complaint, (2) filing of a demand for an answer when a complaint previously was filed, (3) granting of a motion for consolidation pursuant to Rule 42, (4) granting of a motion for suspension under another test case pursuant to Rule 84, (5) filing of a submission for decision upon an agreed statement of facts, (6) granting of a dispositive motion, (7) filing of a request for trial, or (8) granting of a motion for removal.

(d) Dismissal for Lack of Prosecution. An action not removed from the Suspension Disposition Calendar within the established period shall be dismissed for lack of prosecution, and the clerk shall enter an order of dismissal without further direction of the court, unless a motion is pending. If a pending motion is denied and less than 10 days remain in which the action may remain on the Suspension Disposition Calendar, the action shall remain on the Suspension Disposition Calendar for 10 days from the entry of the order denying the motion.

actions which have not been removed from the Suspension Disposition Calendar within the period established by the Court following the final determination of the test case under which they were suspended.

In this instance the decision in the test case of *Intercontinental Fibres, Inc.* v. *United States*, 70/41971, became final on March 17, 1977. In accordance with Rule 14.8 of the Rules of the United States Customs Court, which was the precursor of the present Rule 85, the plaintiff was advised that the actions had to be removed from the Suspension Disposition File on or before September 29, 1977. Thereafter, on plaintiff's motion the Court extended the time to remove the cases until 30 days after the final determination of *Henry Pollack, Inc.* v. *W. M. Blumenthal et al.*, D.C.D.C. Civil No. 77-1177, which was an attempt to litigate the matter in the District Court. The dismissal of that District Court action became final when the Supreme Court denied certiorari on October 1, 1979. *Henry Pollack, Inc.* v. *Blumenthal et al.*, 444 F. Supp. 56 (D.C.D.C., 1977) aff'd mem. 593 F. 2d 1471 (C.A.D.C., 1979), *cert. den.* 444 U.S. 836 (1979).

Accordingly these actions became subject to dismissal 30 days after the denial of certiorari although they were not actually dismissed until August 12, 1981.[2]

Plaintiff argues that the dismissal is void for failure of the Clerk of the Court to comply with Rule 85(b) in not giving the parties notice of the date on which the action was ultimately dismissed. Plaintiff further argues that the dismissal order violated its right to due process of law.

The Court finds no violation of Rule 85 and certainly no deprivation of due process. The initial notice by the Clerk informed the parties of the expiration date of the newly formed suspension disposition file. That is the only necessary notification under Rule 85 and the only notice with due process implications for the simple reason that the first setting of the expiration date is done by the Court itself without motions by the parties and might otherwise remain unknown to them.

If that expiration date is later extended upon motion of the parties they are informed in the resulting order of the new expiration date and additional notice from the Court is not required by Rule 85.

It is reasonable to expect a party to remain aware of the new expiration date established as the result of the granting of its motion. It is unreasonable to expect the Court to issue repeated reminders each time a party obtains an extension of time. If the new date is fixed by reference to the future date of finality of a named action it is

---

[2] Plaintiff mistakenly asserts that these actions were transferred to the so-called *Alcan* suspension disposition file, which expired on April 27, 1981, 30 days after the denial of certiorari in *Cornet Stores* v. *Azie Taylor Morton*, Civil No. 78-3183 (C.A. 9).

entirely proper to expect the party whose rights are subject to that date to maintain a close watch on the named action. Nor is the determination of when an action is disposed of by the Supreme Court a matter in which a party should need the assistance of this Court. Those whose rights hinge on the progress of other actions have the duty to follow those actions closely. This is the general policy of the Federal Rules of Civil Procedure and ought to apply with equal force in this Court. Cf. *Universal Film Exchanges, Inc.* v. *Lust*, 479 F. 2d 593 (C.A. 4, 1973); *Nichols-Morris Corp* v. *Morris*, 279 F. 2d 81 (C.A. 2, 1960); *MCA Inc. d.b.a. MCA Music* v. *Wilson*, 425 F. Supp. 457 (S.D.N.Y. 1977).

The purpose of suspension is not to create a reservoir of future litigation or to preserve actions for last-minute revivals. Its purpose is to encourage disposition in accordance with test cases. Removal from a suspension disposition file is the unavoidable responsibility of the party seeking to avoid dismissal. It does not follow from the fact that these suspension disposition files also serve the interest of Court efficiency that the actions they contain can be immunized from normal considerations of diligence.

The dismissal procedure utilized in these actions does not raise a genuine question of deprivation of due process. The cases cited by plaintiff were all instances of important adverse actions taken without notice to the affected party. These included designation of organizations as "Communist" in *Anti-Facist Committee* v. *McGrath*, 341 U.S. 123 (1951) and the issuance of executions and writs against property in *Coe* v. *Armour Fertilizer Works*, 237 U.S. 413 (1914). Here a party merely seeks an additional reminder of something about which it already had notice. Nor is the expression of the deadline for prosecution of a legal action in terms of the finality of another action comparable to the newspaper notice to trust fund beneficiaries found insufficient in *Mullane* v. *Central Hanover Trust*, 339 U.S. 306 (1950). Here the party is already involved in a specific judicial proceeding, should be well aware of an impending expiration date and is not the victim of an unexpected and diffuse method of notification.

For the above reasons the Court concludes that it should not set aside the dismissal of these cases for lack of prosecution. It is therefore Ordered that plaintiff's motion be denied in all respects.

Judgment of the U.S. Court of International Trade in Appealed Case

SEPTEMBER 30, 1981

APPEAL 80-17.—BORDER BROKERAGE CO., INC. *v.* UNITED STATES.—STEEL REINFORCING BARS—LTFV AND INJURY DETERMINATIONS—DUMPING DUTIES—ANTIDUMPING ACT.—C.D. 4825 AFFIRMED APRIL 16, 1981 (C.A.D. 1262).

International Trade Commission Notices

Investigations by the U.S. International Trade Commission

DEPARTMENT OF THE TREASURY, OCTOBER 15, 1981

The appended notices relating to investigations by the U.S. International Trade Commission are published for the information of Customs officers and others concerned.

WILLIAM VON RAAB,
Commissioner of Customs.

In the Matter of CERTAIN UNIVERSAL JOINT KITS, COMPONENTS THEREOF, AND TRUNNION SEALS USED THEREWITH	Investigation No. 337-TA-93

Notice of Termination

AGENCY: U.S. International Trade Commission.

ACTION: Termination of investigation No. 337-TA-93.

SUMMARY: Notice is hereby given that the Commission has granted a motion to terminate the above-referenced investigation.

AUTHORITY: The authority for Commission disposition of this matter is contained in section 337 of the Tariff Act of 1930 (19 U.S.C. 1337) and in section 210.55 of the Commission's Rules of Practice and Procedure (19 CFR 210.55).

SUPPLEMENTARY INFORMATION: The termination is based on a settlement agreement between the complainant in this investigation, Dana Corp., and all remaining respondents, GMB Universal Joints, Inc., GMB Universal Joints (West), Inc., and Naniwa Seimitsu Industry Co. The settlement agreement was published in the *Federal Register* of July 29, 1981 (46 F.R. 38787).

Copies of the Commission action and order and all other nonconfidential documents filed in connection with this investigation are available for inspection during official business hours (8:45 a.m. to

5:15 p.m.) in the Office of the Secretary, U.S. International Trade Commission, 701 E Street NW., Washington, D.C. 20436, telephone 202–523–0161.

FOR FURTHER INFORMATION CONTACT: Jack Simmons, Esq., Office of the General Counsel, U.S. International Trade Commission, telephone 202–523–0350.

By order of the Commission.
Issued: October 5, 1981.

KENNETH R. MASON,
Secretary.

In the Matter of
CERTAIN MOLDED-IN SANDWICH PANEL INSERTS AND METHODS FOR THEIR INSTALLATION } Investigation No. 337–TA–99

Notice of Prehearing Conference and Hearing

Notice is hereby given that a prehearing conference will be held in this case at 9:00 a.m. on October 19, 1981, in the Dodge Center, Room 201, 1010 Wisconsin Avenue, N.W., Washington, D.C., and the hearing will commence immediately thereafter.

The purpose of the prehearing conference is to review the trial memoranda submitted by the parties, to stipulate exhibits into the record, and to discuss any questions raised by the parties relating to the hearing.

The Secretary shall publish this notice in the Federal Register.

Issued: October 5, 1981.

JANET D. SAXON,
Administrative Law Judge.

Investigation No. 701–TA–81 (Preliminary)

HARD-SMOKED HERRING FILETS FROM CANADA

Notice of Institution of Preliminary Countervailing Duty Investigation and Scheduling of Conference

AGENCY: United States International Trade Commission.

ACTION: Institution of a preliminary countervailing duty investigation to determine whether there is a reasonable indication that an industry in the United States is materially injured, or is threatened

with material injury, or the establishment of an industry is materially retarded, by reason of allegedly subsidized imports from Canada of hard-smoked herring filets, classified under item 111.80 of the Tariff Schedules of the United States.

EFFECTIVE DATE: September 30, 1981.

FOR FURTHER INFORMATION CONTACT: John MacHatton, Supervisory Investigator (202–523–0439).

SUPPLEMENTARY INFORMATION:

Background. This investigation is being instituted following receipt of a petition on September 30, 1981, filed by the McCurdy Fish Co., Lubec, Maine. The petition alleges that Canada provides subsidies to firms handling and processing fish, including those that smoke herring, and that, by reason of imports of this allegedly subsidized product, an industry in the United States is being materially injured or threatened with material injury.

Authority. Section 703(a) of the Tariff Act of 1930 (19 U.S.C. 1671b) requires the Commission to make a determination of whether there is a reasonable indication that an industry in the United States is materially injured, or is threatened with material injury, or the establishment of an industry in the United States is materially retarded, by reason of imports of the merchandise which is the subject of the investigation by the administering authority (Commerce). Such a determination must be made within 45 days after the date on which a petition is filed under section 702(b). Accordingly, the Commission, on October 2, 1981, instituted preliminary countervailing duty investigation No. 701–TA–81. This investigation will be subject to the provisions of part 207 of the Commission's Rules of Practice and Procedure (19 CFR 207) and particularly, subpart B thereof.

Written submissions. Any person may submit a written statement of information pertinent to the subject matter of this investigation to the Commission on or before November 2, 1981. A signed original and nineteen copies of such statement must be submitted.

Any business information which a submitter desires the Commission to treat as confidential shall be submitted separately and each sheet must be clearly marked at the top "Confidential Business Data". Confidential submissions must conform with the requirements of section 201.6 of the Commission's Rules of Practice and Procedure (19 CFR 201.6). All written submissions, except for confidential business data, will be available for public inspection.

Conference. The Director of Operations of the Commission has scheduled a conference in connection with this investigation for 10:00 a.m., e.d.t., on October 26, 1981, at the U.S. International Trade

Commission Building, 701 E Street, NW., Washington, D.C. Parties wishing to participate in the conference should contact Mr. John MacHatton (202–523–0439) by 5:00 p.m., e.d.t., October 22, 1981. It is anticipated that parties in support of the petition for countervailing duties and parties opposed to such petition will each be collectively allocated one hour within which to make an oral presentation at the conference. Further details concerning the conduct of the conference will be provided by Mr. John MacHatton.

Inspection of petition. The petition filed in this case is available for public inspection at the Office of the Secretary, U.S. International Trade Commission.

By order of the Commission.

Issued: October 2, 1981.

KENNETH R. MASON,
Secretary.

In the Matter of
CERTAIN STEEL ROD TREATING APPARATUS AND COMPONENTS THEREOF } Investigation No. 337–TA–97

Approval of Withdrawal of Motion for Temporary Exclusion Order and Denial of Motion for Expedited Consideration

AGENCY: U.S. International Trade Commission.

ACTION: Approval of withdrawal of motion for temporary exclusion order (Motion No. 97–55). Denial of motion for expedited Commission determination on permanent relief before October 30, 1981 (Motion No. 97–54).

SUPPLEMENTARY INFORMATION: Pursuant to section 337 of the Tariff Act of 1930, 19 U.S.C. § 1337, the Commission is currently conducting an investigation of alleged unfair acts and unfair methods of competition in connection with the importation or sale of certain steel rod treating apparatus and components thereof. In the course of investigation No. 337–TA–97, complainant Morgan Construction Co. moved for an expedited Commission determination on permanent relief (Motion No. 97–54) and for a temporary exclusion order (Motion No. 97–55).

Notice is hereby given that complainant Morgan Construction Co. has withdrawn its motion for a temporary exclusion order. After reviewing Motion No. 97–55 and the papers submitted in connection therewith the Commission has approved complainant's withdrawal of

its motion. Notice is further given that the Commission has denied complainant's motion for a Commission determination on permanent relief before October 30, 1981 (Motion No. 97–54).

FOR FURTHER INFORMATION CONTACT: Warren H. Maruyama, Esq., Office of the General Counsel, U.S. International Trade Commission, 701 E Street NW., Washington, D.C. 20436; telephone 202–523–0375.

By order of the Commission.

Issued: October 1, 1981.

KENNETH R. MASON,
Secretary.

731–TA–38 (Final)

TRUCK TRAILER AXLE-AND-BRAKE ASSEMBLIES AND PARTS THEREOF FROM HUNGARY

Institution of Final Antidumping Investigation and Scheduling of Hearing

AGENCY: United States International Trade Commission.

ACTION: Institution of a final antidumping duty investigation.

SUMMARY: On September 17, 1981, the United States Department of Commerce issued a preliminary determination that there is reason to believe or suspect that truck trailer axle-and-brake assemblies and parts thereof from Hungary are being sold in the United States at less than fair value within the meaning of section 731 of the Tariff Act of 1930 (19 U.S.C. 1673b). Accordingly, the United States International Trade Commission (hereinafter "the Commission") hereby gives notice of the institution of investigation No. 731–TA–38 (Final) to determine whether an industry in the United States is materially injured or is threatened with material injury, or the establishment of an industry in the United States is materially retarded, by reason of imports of such merchandise provided for in items 692.32 and 692.60 of the Tariff Schedules of the United States (TSUS). This investigation will be conducted according to the provisions of Part 207 of the Commission's Rules of Practice and Procedure (19 CFR 207), Subpart C, effective January 1, 1980.

EFFECTIVE DATE: September 17, 1981.

FOR FURTHER INFORMATION CONTACT: Ms. Abigail Eltzroth, Office of Investigations, U.S. International Trade Com-

mission, Room 337, 701 E Street, NW., Washington, D.C. 20436; telephone (202) 523–0289.

SUPPLEMENTARY INFORMATION: On March 23, 1981, the Commission determined on the basis of the information developed during the course of investigation No. 731–TA–38 (Preliminary), that there is a reasonable indication that an industry in the United States is materially injured or is threatened with material injury by reason of imports of truck trailer axle-and-brake assemblies and parts thereof from Hungary, provided for in TSUS items 693.32 and 692.60, which are allegedly sold or likely to be sold at less than fair value. As a result of the Commission's determination, the Department of Commerce continued its investigation into the question of less-than-fair-value sales. The final determination by the Department of Commerce of whether truck trailer axle-and-brake assemblies and parts thereof from Hungary are being, or are likely to be, sold in the United States at less than fair value will be made within 75 days after the date of its preliminary determination, or, in this case, by December 1, 1981.

Written submissions: Any person may submit to the Commission a written statement of information pertinent to the subject of this investigation. A signed original and nineteen (19) true copies of each submission must be filed at the Office of the Secretary, U.S. International Trade Commission Building, 701 E Street, NW., Washington, D.C. 20436, on or before December 16, 1981. All written submissions, except for confidential business data, will be available for public inspection.

Any submission of business information for which confidential treatment is desired shall be submitted separately from other documents. The envelope and all pages of such submissions must be clearly labeled "Confidential Business Information". Confidential submissions and requests for confidential treatment must conform with the requirements of section 201.6 of the Commission's Rules of Practice and Procedure (19 CFR 201.6).

A staff report containing preliminary findings of fact will be available to all interested parties on November 19, 1981.

Public hearing: The Commission will hold a public hearing in connection with this investigation on December 9, 1981, in the Hearing Room of the U.S. International Trade Commission Building, 701 E Street, NW., Washington, D.C. 20436, beginning at 10:00 a.m., e.s.t. Requests to appear at the hearing should be filed in writing with the Secretary to the Commission not later than the close of business (5:15 p.m., e.s.t.), December 1, 1981. All persons desiring to appear at the hearing and make oral presentations should

attend a prehearing conference to be held at 10:00 a.m., e.s.t., on December 2, 1981, in Room 117 of the U.S. International Trade Commission Building and must file prehearing statements on or before December 4, 1981. For further information concerning the conduct of the investigation, hearing procedures, and rules of general application, consult the Commission's Rules of Practice and Procedure Part 207, Subpart C (19 CFR 207), and Part 201, Subparts A through E (19 CFR 201).

The Commission has waived Commission rule 201.12(d), "submission of prepared statements," in connection with this investigation. This rule states that "Copies of witnesses' prepared statements should be filed with the Office of the Secretary of the Commission not later than 3 business days prior to the hearing and submission of such statements shall comply with sections 201.6 and 201.8 of this subpart". It is nevertheless the Commission's request that parties submit copies of witnesses' prepared testimony as early as practicable before the hearing in order to permit Commission review.

This notice is published pursuant to section 207.20 of the Commission's Rules of Practice and Procedure (19 CFR 207.20).

By order of the Commission.

Issued: September 30, 1981.

KENNETH R. MASON,
Secretary.

Index

U.S. Customs Service

	T.D. No.
Treasury decisions:	
Bonds:	
Control of instruments of International traffic bond	81-265
Rider to private carrier's bonds	81-266
Foreign currencies:	
Certified quarterly rates; October 1 through December 31, 1981	81-269
Daily rates; September 28 through October 2, 1981	81-270
Variances; September 28-30, 1981	81-271
Gas cylinders	81-268
Three-wheel all terrain cycles	81-267

U.S. GOVERNMENT PRINTING OFFICE : 1981 O - 354-809

DEPARTMENT OF THE TREASURY
U.S. CUSTOMS SERVICE
WASHINGTON, D.C. 20229

OFFICIAL BUSINESS
PENALTY FOR PRIVATE USE, $300

POSTAGE AND FEES PAID
DEPARTMENT OF THE TREASURY (CUSTOMS)
(TREAS. 552)

best copy available

15/44

NEWARK PUBLIC LIBRARY

DEC 1 1981

U. S. GOVT. PUBS.
BOSTON, MASS.

Customs Bulletin

Regulations, Rulings, Decisions, and Notices concerning Customs and related matters

and Decisions

of the United States Court of Customs and Patent Appeals and the United States Court of International Trade

Vol. 15 NOVEMBER 4, 1981 No. 44

This issue contains

T.D. 81–272 Through 81–274
General Notices
Recent Unpublished Customs Service Decisions
Slip Op. 81–91
International Trade Commission Notices

THE DEPARTMENT OF THE TREASURY
U.S. Customs Service

T 1. 11/3:

NOTICE

The abstracts, rulings, and notices which are issued weekly by the U.S. Customs Service are subject to correction for typographical or other printing errors. Users may notify the U.S. Customs Service, Logistics Management Division, Washington, D.C. 20229, of any such errors in order that corrections may be made before the bound volumes are published.

For sale by the Superintendent of Documents, U.S. Government Printing Office, Washington, D.C. 20402. Price: $2.25 (single copy domestic); $2.85 (single copy foreign). Subscription price: $85.00 a year domestic; $106.25 a year foreign.

U.S. Customs Service

Treasury Decisions

(T.D. 81-272)

Bonds

Approval of a Carrier's Bond, Customs Form 3587

A bond of a carrier for the transportation of bonded merchandise has been approved as shown below. The approval of the bond is temporary until June 8, 1982.

Dated: October 16, 1981.

Name of principal and surety	Date of bond	Date of approval	Filed with district director/area director/amount
R. A. Brue Trucking, Rt. 23 and I-80, Ottawa, Ill.; motor carrier; Travellers Indemnity Co.	Sept. 3, 1981	Sept. 16, 1981	Chicago, Ill. $25,000

BON-3-03

MARILYN G. MORRISON,
Director,
Carriers, Drawback and Bonds Division.

(T.D. 81-273)

Synopses of drawback decisions

The following are synopses of drawback rates issued March 20, 1981, to July 29, 1981, inclusive, pursuant to sections 22.1 through 22.5, inclusive, Customs Regulations.

In the synopses below are listed for each drawback rate approved under 19 U.S.C. 1313(a), the name of the company, the specified articles on which drawback is authorized, the merchandise which will be used to manufacture or produce these articles, the factories where the work will be accomplished, the date the statement was signed, the

basis for determining payment, the Regional Commissioner who issued the rate, and the date on which it was signed.

DRA-1-09

Dated: October 16, 1981.

MARILYN G. MORRISON,
Director,
Carriers, Drawback and Bonds Division.

(A) Company: Beam's Industries, Inc.
Articles: Seat belts.
Merchandise: Imported buckles, nuts, bolts, and seat belt parts.
Factory: Oklahoma City, Okla.
Statement signed: January 27, 1981.
Basis of claim: Appearing in.
Rate issued by Regional Commissioner of Customs: Los Angeles, July 17, 1981.

(B) Company: Caine Steel Company of Michigan, Inc.
Articles: Steel sheets, strips, and blanks cut to sizes specified by customers.
Merchandise: Imported hot rolled, cold rolled, and galvanized steel sheet, and zincrometal sheet.
Factory: Detroit, Mich.
Statement signed: April 6, 1981.
Basis of claim: Appearing in.
Rate issued by Regional Commissioner of Customs: New York, July 2, 1981.

(C) Company: Cosan Chemical Corp.
Articles: Phenylmercury acetate Cosan JTA–20, phenylmercury acetate Cosan PMA–30, phenylmercury oleate Cosan PMO–30; phenylmercury acetate (water soluble bags) Cosan PM–100 WSB; phenylmercury 2-ethylhexylmaleate Cosan 171–S.
Merchandise: Imported mercuric oxide and mercury metal.
Factory: Carlstadt, N.J.
Statement signed: January 23, 1981.
Basis of claim: Appearing in.
Rate issued by Regional Commissioner of Customs: New York, March 20, 1981.
Revokes: T.D. 71–98–S.

(D) Company: Dorr-Oliver, Inc.
Articles: Filtration and separation equipment, completed centrifuge parts and finished machined parts.

Merchandise: Imported raw castings, machine parts, centrifuge parts and assemblies.
Factory: Hazleton, Penn.
Statement signed: March 6, 1981.
Basis of claim: Used in.
Rate issued by Regional Commissioner of Customs: New York, July 2, 1981.

(E) Company: Drexel Chemical Co.
Articles: Maleic hydrazide 3 lb/USG (DEAD salt).
Merchandise: Imported maleic hydrazide technical 95%.
Factory: Memphis, Tenn.
Statement signed: June 15, 1981.
Basis of claim: Used in.
Rate issued by Regional Commissioner of Customs: New Orleans, July 14, 1981.

(F) Company: Dynapac Manufacturing. Inc.
Articles: Vibratory compactor, self propelled and electric vibrator kits.
Merchandise: Imported vibratory compactor kits; incomplete vibratory compactors unassembled; diesel engines and motor vibrators.
Factory: Stanhope, N.J.
Statement signed: April 14, 1981.
Basis of claim: Used in.
Rate issued by Regional Commissioner of Customs: New York, July 29, 1981.
Revokes: T.D. 54929–B as amended by T.D. 75–99–D.

(G) Company: Eastman Kodak Co.
Articles: Dyes.
Merchandise: Imported 2-methoxyethylamine.
Factory: Kingsport, Tenn.
Statement signed: May 15, 1981.
Basis of claim: Used in.
Rate issued by Regional Commissioner of Customs: Baltimore, July 1, 1981.

(H) Company: Engineered Components Inc.
Articles: Metal building components.
Merchandise. Imported steel coil.
Factory: Stafford, Tex.
Statement signed: November 10, 1978.
Basis of claim: Used in.
Rate issued by Regional Commissioner of Customs: Houston, June 24, 1981.

(I) Company: General Instrument Corp.
Articles: Radar warning system.
Merchandise: Imported quadruplexer assembly, circuit card assembly and high voltage power supply assembly.
Factory: Hicksville, N.Y.
Statement signed: June 15, 1981.
Basis of claim: Appearing in.
Rate issued by Regional Commissioner of Customs: New York, July 29, 1981.

(J) Company: Hi Specialty America, Division of Hitachi Metals International, Limited.
Articles: High speed steel drawn bars, high speed steel centerless ground bars, high speed steel drawn coils.
Merchandise: Imported high speed steel wire rods.
Factory: Irwin, Penn.
Statement signed: March 6, 1981.
Basis of claim: Used in, less valuable waste.
Rate issued by Regional Commissioner of Customs: Baltimore, June 29, 1981.

(K) Company: Honda of America Manufacturing, Inc.
Articles: Motorcycles.
Merchandise: Imported motorcycle equivalent units (sets of motorcycle parts).
Factory: Marysville, Ohio.
Statement signed: June 9, 1981.
Basis of claim: Appearing in.
Rate issued by Regional Commissioner of Customs: Chicago, June 17, 1981.

(L) Company: Jessop Steel Co.
Articles: Semi-finished titanium slabs and sheet.
Merchandise: Drawback c/p titanium 6'' thick conditioned slabs.
Fa. ories: Washington and East Whitehead Township, Penn.; Owensboro, Ky.; Hillside, Ill.; Santa Fe Springs, Calif.
Statement signed: November 5, 1980.
Basis of claim: Used in.
Rate issued by Regional Commissioner of Customs: New York, July 2, 1981.

(M) Company: Koss Corp.
Articles: Stereophones and speakers.

Merchandise: Imported cord sets, speakers, cabinets, electrical cord material and transducers.
Factory: Milwaukee, Wis.
Statement signed: June 22, 1981.
Basis of claim: Appearing in.
Rate issued by Regional Commissioner of Customs: San Francisco, July 10, 1981.

(N) Company: Litton Microwave Cooking Products, Litton Systems, Inc.
Articles: Microwave ovens.
Merchandise: Imported component parts.
Factories: Brooklyn Park, New Hope and Plymouth (2), Minn.; Sioux Falls, S. Dak.
Statement signed: June 8, 1981.
Basis of claim: Used in.
Rate issued by Regional Commissioner of Customs: Chicago, June 25, 1981.
Revokes: T.D. 75–297–J as amended by T.D. 78–159–O.

(O) Company: Moire Corporation of America.
Articles: Bleached, dyed and/or printed piece goods.
Merchandise: Imported piece goods.
Factory: Fair Lawn, N.J.
Statement signed: March 17, 1981.
Basis of claim: Used in, less valuable waste.
Rate issued by Regional Commissioner of Customs: New York, July 2, 1981.

(P) Company: National Nickel Alloy Corp.
Articles: Mischmetal.
Merchandise: Imported alloys of rare earth metals.
Factory: Transfer, Penn.
Statement signed: January 9, 1981.
Basis of claim: Used in.
Rate issued by Regional Commissioner of Customs: Baltimore, July 10, 1981.

(Q) Company: Norsk Hydro Aluminum, Inc.
Articles: Aluminum extrusions and drawn aluminum tubing.
Merchandise: Imported aluminum extrusion billets.
Factory: Rockledge, Fla.

Statement signed: May 8, 1981.
Basis of claim: Used in.
Rate issued by Regional Commissioner of Customs: Miami, June 19, 1981.

(R) Company: North American Refractories Co.
Articles: Deadburned magnesite brick for lining ovens.
Merchandise: Imported refractory magnesite.
Factories: Womelsdorf, Penn.; White Cloud, Mich.
Statement signed: April 30, 1981.
Basis of claim: Used in.
Rate issued by Regional Commissioner of Customs: Chicago, June 17, 1981.
Revokes: T.D. 69–80–D.

(S) Company: North American Steel Corp.
Articles: Steel sheet, strip, plate, bands, and blanks cut to specific size.
Merchandise: Imported hot rolled, cold rolled, and galvanized steel sheet, zincrometal sheet, and steel bands.
Factory: Melvindale, Mich.
Statement signed: April 27, 1981.
Basis of claim: Appearing in.
Rate issued by Regional Commissioner of Customs: New York, July 20, 1981.

(T) Company: Pratt & Whitney Aircraft Group.
Articles: Aircraft engine part—cold nozzle.
Merchandise: Imported nickel metal in the form of: sheet stock, bars, and forgings (aircraft engine parts); name plates; rivets and weldwire.
Factory: West Palm Beach, Fla.
Statement signed: May 11, 1981.
Basis of claim: Used in, less valuable waste.
Rate issued by Regional Commissioner of Customs: Miami, July 1, 1981.

(U) Company: Sioux Veneer Panel Co.
Articles: Decorative vinyl panels.
Merchandise: Imported plywood panels.
Factory: Boise, Idaho.
Statement signed: July 8, 1981.
Basis of claim: Appearing in.
Rate issued by Regional Commissioner of Customs: Los Angeles, July 29, 1981.

(V) Company: Square D Co.
Articles: Metal clad switchgear.
Merchandise: Imported high voltage circuit breakers and other component electrical parts.
Factory: Middletown, Ohio.
Statement signed: March 23, 1981.
Basis of claim: Used in.
Rate issued by Regional Commissioner of Customs: Chicago, July 29, 1981.

(W) Company: Textile Prints Corp.
Articles: Bleached, dyed and/or printed piece goods.
Merchandise: Imported piece goods.
Factory: Branford, Conn.
Statement signed: January 12, 1981.
Basis of claim: Used in, less valuable waste.
Rate issued by Regional Commissioner of Customs: New York, July 2, 1981.

(X) Company: U.S. Precision Lens, Inc.
Articles: Visitronic auto/focus modules.
Merchandise: Imported integrated circuit subassemblies and prisms.
Factory: Cincinnati, Ohio.
Statement signed: June 10, 1981.
Basis of claim: Appearing in.
Rate issued by Regional Commissioner of Customs: Chicago, June 22, 1981.

(Y) Company: Viking Metallurgical Corp.
Articles: C/P titanium ring forgings.
Merchandise: Drawback c/p titanium ingot or billet.
Factory: Verdi, Nev.
Statement signed: February 5, 1981.
Basis of claim: Appearing in.
Rate issued by Regional Cummissioner of Customs: New York, July 2, 1981.

(Z) Company: Yamazaki Machinery Corp.
Articles: Turret lathe machines.
Merchandise: Various imported machine parts.
Factory: Florence, Ky.
Statement signed: May 13, 1981.
Basis of claim: Appearing in.
Rate issued by Regional Commissioner of Customs: New York, July 20, 1981.

356-508 O - 81 - 2

(T.D. 81-274)

Customhouse Broker License—Cancellation

Cancellation With Prejudice of Customhouse Broker License 3888

Notice is hereby given that the Commissioner of Customs, on October 19, 1981, pursuant to section 641, Tariff Act of 1930, as amended (19 U.S.C. 1641), and section 111.51(b) Customs Regulations, as amended, upon the specific request of Orlando Sala, San Juan, Puerto Rico, cancelled with prejudice individual customhouse broker's license No. 3888 issued to him on February 27, 1967, for the Customs District of Puerto Rico. The Commissioner's decision is effective as of October 19, 1981.

WILLIAM T. ARCHEY,
Acting Commissioner of Customs.

[Published in the Federal Register Oct. 26, 1981 (46 FR 52269)]

U.S. Customs Service

General Notices

19 CFR Parts 10, 18, 114, 143

Proposed Amendments to the Customs Regulations Relating to Carnets

AGENCY: U.S. Customs Service, Department of the Treasury.

ACTION: Proposed rule; correction.

SUMMARY: This document corrects a typographical error in a proposed rule relating to carnets which appeared at page 48235 in the Federal Register of Thursday, October 1, 1981 (46 FR 48235).

FOR FUTHER INFORMATION CONTACT: Jerold O. Worley, Office of Commercial Operations, U.S. Customs Service (202–566–8607).

The following correction is made to the document: On page 48236, left-hand column, the telephone number in parentheses under the caption "FOR FURTHER INFORMATION CONTACT:" is corrected to read "202–566–8607."

Dated: October 14, 1981.

STEVEN PINTER,
Director, Regulations Control and Disclosure Law Division.

[Published in the Federal Register Oct. 21, 1981 (46 FR 51619)]

(19 CFR 177)

Tubular Textile Braided Lead Lines: Change of Practice Considered

AGENCY: U.S. Customs Service, Department of the Treasury.

ACTION: Proposed change of practice.

SUMMARY: This document gives notice that the Customs Service is reviewing an established and uniform practice concerning the classification of certain tubular textile braided lines containing, and in chief value of, lead cores. Customs currently classifies the merchandise under the provision for articles of lead, not coated or plated with precious metal, valued over 13½ cents per pound in item 657.75,

Tariff Schedules of the United States (TSUS). The proposed change of practice would result in the classification of the merchandise under the *eo nomine* provision for tubular braids with a nonelastic core, not suitable for making or ornamenting headwear, in item 348.00, TSUS. If adopted, the proposed change of practice would result in the assessment of higher duties for the subject merchandise.

DATES: Comments must be received on or before (60 days from date of publication in the Federal Register).

ADDRESS: Written comments (preferably in triplicate) may be addressed to the Commissioner of Customs, Attention: Regulations Control Branch, U.S. Customs Service, 1301 Constitution Avenue, NW., Washington, D.C. 20229.

FOR FURTHER INFORMATION CONTACT: Phil Robins, Classification and Value Division, U.S. Customs Service, 1301 Constitution Avenue, NW., Washington, D.C. 20229 (202-566-8181).

SUPPLEMENTARY INFORMATION:

BACKGROUND

In a Headquarters Ruling dated August 26, 1965, file No. TC 423.32 30, abstracted as T.D. 56521(91), Customs held that leadlines composed of braided textile covers over lead cores, valued at 40¼ cents per pound, and in chief value of lead, were classifiable under the provision for articles of lead, not coated or plated with precious metal, valued over 13⅛ cents per pound, in item 657.75, Tariff Schedules of the United States (TSUS) (19 U.S.C. 1202). That ruling was circulated to all ports, and all importations of the merchandise of the kind in question have been classified in conformity therewith, resulting in an established and uniform practice within the meaning of section 315(d), Tariff Act of 1930, as amended (19 U.S.C. 1315(d)).

In a subsequent Headquarters Ruling dated August 23, 1978, file 055132, Customs held that because of the established and uniform practice discussed above, certain tubular braids containing, and in chief value of, lead cores are classifiable under item 657.75, TSUS. The material in question had a core of 98 percent lead and 2 percent antimony. However, the ruling indicated that the correct classification of this merchandise should be under the provision for tubular braids with a nonelastic core, not suitable for making or ornamenting headwear, in item 348.00, TSUS.

Item 348.00, TSUS, is an *eo nomine* provision that neither requires the merchandise to be in chief value of any particular material, nor does it require the merchandise to be of textile materials. Further, even if there were a requirement that the braids had to be "of textile

materials," the term "textile materials" is defined in Headnote 2(a)(v), Schedule 3, TSUS, as including "braids." The word "braids" is defined in Subpart (f) of the same headnote as including all braids of any construction, with or without cores.

PROPOSED CHANGE OF PRACTICE

An *eo nomine* provision for an article, such as the provision for tubular braids with a nonelastic core, not suitable for making or ornamenting headwear, without limitations or shown contrary legislative intent, judicial decision, or administrative practice to the contrary, and without proof of commercial designation, will include all forms of such article. *Nootka Packing Co.* v. *United States*, 22 CCPA 464, T.D. 47464 (1935). In view of this principle and in light of the definitions of "textile materials" and "braids" enunciated above, Customs proposes to change the current established and uniform practice of classifying tubular textile braided lines with a nonelastic lead core of the kind in question under item 657.75, TSUS. Customs proposes that the subject merchandise be reclassified under item 348.00, TSUS.

AUTHORITY

Inasmuch as the proposed change of practice, if adopted, will result in the imposition of a higher rate of duty than previously found to have been applicable to the imported merchandise under the established and uniform practice, Customs is giving notice and opportunity to comment in accordance with section 315(d), Tariff Act of 1930, as amended (19 U.S.C. 1315(d)), and section 177.10(c)(1), Customs Regulations (19 CFR 177.10(c)(1)).

COMMENTS

Before taking any further action on this matter, consideration will be given to any written comments timely submitted to the Commissioner of Customs. Comments submitted will be available for public inspection in accordance with section 103.8(b), Customs Regulations (19 CFR 103.8(b)), during regular business days between the hours of 9:00 a.m. and 4:30 p.m. at the Regulations Control Branch, Room 2426, U.S. Customs Service, Headquarters, 1301 Constitution Ave., NW., Washington, D.C. 20229.

DRAFTING INFORMATION

The principal author of this notice was Charles D. Ressin, Regulations Control Branch, Office of Regulations and Rulings, U.S.

Customs Service. However, personnel from other Customs offices participated in its development.

WILLIAM T. ARCHEY,
Acting Commissioner of Customs.

Approved: September 25, 1981.

JOHN M. WALKER, JR.,
Assistant Secretary of the Treasury.

[Published in the Federal Register Oct. 21, 1981 (46 FR 51698)]

Recent Unpublished Customs Service Decisions

The following listing of recent administrative decisions issued by the U.S. Customs Service, and not otherwise published, is published for the information of Customs officers and the importing community. Although the decisions are not of sufficient general interest to warrant publication as Customs Service Decisions, the listing describes the issues involved and is intended to aid Customs officers and concerned members of the public in identifying matters of interest which recently have been considered by the U.S. Customs Service.

A copy of any decision included in this listing, identified by its date and file munber, may be obtained in a form appropriate for public distribution upon written request to the Office of Regulations and Rulings, Attention: Legal Retrieval and Dissemination Branch, Room 2404, U.S. Customs Service, 1310 Constitution Avenue, N.W., Washington, D.C. 20229. These copies will be made available at a cost to the requester of $0.10 per page. However, the Customs Service will waive this charge if the total number of pages copied is ten or less.

Decisions listed in earlier issues of the CUSTOMS BULLETIN, through June 15, 1981, are available in microfiche format at a cost of $34.05 ($0.15 per sheet of fiche). It is anticipated that additions to the microfiche will be made quarterly and subscriptions are available. Requests for the microfiche now available and for subscriptions should be directed to the Legal Retrieval and Dissemination Branch. Subscribers will automatically receive updates as they are issued and will be billed accordingly.

Dated: October 21, 1981.

MARVIN M. AMERNICK,
(For B. J. Fritz, Director,
Regulations Control and Disclosure Law Division).

Date of Decision	File No.	Issue
9-17-81	065855	Classification: diaper panty used with adult diaper in cases of incontinence (378.05)
9-17-81	066961	Classification: fruit flakes and vegetable flakes (183.05)

Date of Decision	File No.	Issue
9–17–81	068173	Classification: children's slippers with "Tom and Jerry" cartoon characters on them are similar to domestic children's slippers without such characters for American Selling Price purposes
9–17–81	068245	Classification: incomplete combination shotgun and rifle (730.59)
9–25–81	068414	Classification: unfinished radiator cores for railroad locomotives (690.40)
9–4–81	068488	Classification: self-sharpening knives (650.15)
9–23–81	068533	Classification: country of origin of glove halves manufactured in Hong Kong and stitched together in Haiti for tariff purposes
9–24–81	068636	Classification: rubber or plastic gloves not specially designed for use in sport of skiing (734. 99)
9–25–81	068644	Classification: salted young ginger (141.77, 141.89, 141. 98)
8–26–81	068645	Classification: swim shorts with triple needle white stitching (380.84, 380.04)
9–17–81	068655	Classification: combination stepladder-stool and work vise (654.01)
9–23–81	068814	Classification: whether a certain label constitutes ornamentation on ski jackets and pants
9–23–81	068873	Classification: ladies "bolero" (382.04)
9–17–81	068959	Classification: optical display unit employing a humorous motif (774.55)
9–3–81	068963	Classification: whether overlaid patches on military sweaters constitute ornamentation for tariff purposes
9–23–81	068994	Classification: textile label on jeans held to be ornamentation for tariff purposes
9–23–81	069000	Classification: wooden screens (206.67)
9–23–81	069019	Classification: boron carbide neutron absorber plates (658.00)
9–17–81	069037	Classification: the applicability of American Selling Price to ladies basketball or tennis shoe
9–25–81	542502	Classification: valuation of meteorological instruments
9–30–81	542550	Classification: dutiability of erection and installation changes in the U.S.
9–22–81	542611	Classification: dutiability of service charges incurred in connection with U.S. installation of imported equipment
8–26–81	800424	Classification: fabric for manufacture of awnings imported in rolls (338.30)
8–13–81	800863	Classification: athletic footwear (700.35, 700.67, 700.95)
8–5–81	800864	Classification: hollow steel bars, steel tool joints (610.51, 610.80)
7–30–81	800931	Classification: men's cotton briefs (knit) which have a playboy bunny figure printed on the front left side (378.15)
8–4–81	800942	Classification: plastic breaker dispenser (774.55)

Date of Decision	File No.	Issue
8-6-81	800947	Classification: chemical reagents for blood analysis (413.52, 432.25)
8-4-81	800959	Classification: "Draft Doggy," "Footbag Teddy," "Footbag Alaska" (737.25, 737.30, 774.55, 389.50, 386.10)
8-13-81	800994	Classification: cotton woven fabric (325.10, 319.01)
7-22-81	800996	Classification: cast-coated, one-side label paper (254.46)
8-5-81	800998	Classification: wadding material made from fibers of garhetting fabrics (355.25)
8-4-81	801005	Classification: toy "Mummy" bean bag figure (737.95)
7-30-81	801010	Classification: protective rubber and leather camp shoe (700.57)
7-30-81	801021	Classification: metallized yarn (310.60)
9-11-81	801022	Classification: photoconductor/photoreceptor for office copiers (676.52)
8-5-81	801025	Classification: wooden spindles and unfinished lamp bases (202.66, 206.98)
8-13-81	801041	Classification: screen separators (661.95)
8-5-81	801050	Classification: items used with helicopters long range fuel tank, luggage pod, and ventilated seat back (694.61, 727.55)
8-13-81	801051	Classification: match name and description game as printed matter (274.75)
8-19-81	801054	Classification: food and cosmetic products (182.30, 183.05, 461.10, 461.40, 657.60, 657.40)
8-18-81	801063	Classification: ladies knit dresses with edging, ladies knit dress with collar (382.04, 382.78)
7-30-81	801069	Classification: model aircraft built to a scale ratio (737.15)
8-24-81	801076	Classification: clotrimazole, a benzenoid antifungal drug (411.94)
7-30-81	801083	Classification: fluid pumps (660.97)
7-30-81	801084	Classification: Computer spindles (676.52)
8-6-81	801085	Classification: collard hex nut, zinc alloy (646.76)
8-4-81	801086	Classification: women's casual shoe (700.51, 700.52, 700.53, 700.57, 700.59)
8-18-81	801095	Classification: knitted vinyl sheeting (345.50)
8-19-81	801096	Classification: girls knit top and knit dress (382.78)
8-19-81	801103	Classification: multi-purpose battery-operated lantern (688.45)
8-18-81	801113	Classification: ornamentation—triple needle stitching and textile label on jeans (380.00)
9-9-81	801116	Classification: grain and forage moisture tester (870.40, 712.49)
8-13-81	801138	Classification: 400 series powered chassis (692.03, 692.21, 692.22)
9-3-81	801153	Classification: mobile data terminal (685.29)

356-538 O - 81 - 3

Date of Decision	File No.	Issue
9-3-81	801183	Classification: semifinished circular cold saw blade bodies, semifinished circular cold saw blade bodies with separate corresponding carbide tips, semifinished circular cold saw blade bodies with carbide tips brazed onto the cutting teeth of the blade, and carbide tips (649.17, 649.53)
8-28-81	801190	Classification: pollypropylene strips woven (385.53)
9-8-81	801192	Classification: mixing valve (680.17)
8-24-81	801196	Classification: jacket with inserted fabric strips and piping (380.12)
8-24-81	801197	Classification: inksticks (474.26)
8-28-81	801227	Classification: boy's woven synthetic Jacket (380.04)
8-28-81	801232	Classification: electrostatic plate paper (254.85)
8-31-81	801233	Classification: set of two auto valve tools (648.85, 651.47)
9-23-81	801258	Classification: marine radars and radio navigational aid (685.60)
9-23-81	801290	Classification: salinity refractometer (711.86)
9-10-81	801292	Classification: diodes (687.65, 682.60)
9-23-81	801312	Classification: California redwood strips (207.00)
9-18-81	801325	Classification: rebuilt gasoline engines (660.48)
9-18-81	801352	Classification: clay sculptures (765.15)
9-23-81	801353	Classification: wearing apparel with double piping (382.33, 382.81)
9-18-81	801354	Classification: automobile exhaust gas oxygen sensor (712.49)
9-18-81	801379	Classification: wooden furniture of solid pine (727.35)

United States Court of International Trade

One Federal Plaza
New York, N.Y. 10007

Chief Judge

Edward D. Re

Judges

Paul P. Rao
Morgan Ford
Scovel Richardson
Frederick Landis
James L. Watson
Herbert N. Maletz
Bernard Newman
Nils A. Boe

Senior Judge

Samuel M. Rosenstein

Clerk

Joseph E. Lombardi

Decisions of the United States Court of International Trade

(Slip Op. 81–91)

SIEMENS AMERICA, INC. AND SIEMENS CORPORATION, PLAINTIFFS *v.* UNITED STATES, DEFENDANT

Consolidated Court No. 72–5–01093

[On remand from the Court of Customs and Patent Appeals, C.A. 80–33, C.A.D. 1266].

[Action dismissed.]

(Decided October 7, 1981)

Freeman, Meade, Wasserman & Schneider, Esqs. (***Louis Schneider*** and ***Kenneth Nathan Wolf***, Esqs., of counsel) for the plaintiff.

J. Paul McGrath, Assistant Attorney General, *Joseph I. Liebman*, Attorney in Charge, International Trade Field Office, Commercial Litigation Branch, and *Madeline B. Kuflik*, Esq., for the defendant.

NEWMAN, *Judge:* This action is before me pursuant to a remand issued by the Court of Customs and Patent Appeals in *The United States* v. *Siemens America, Inc. and Siemens Corporation*, 68 CCPA ——, C.A.D. 1266, —— F. 2d —— (June 25, 1981, rehearing denied August 27, 1981).

BACKGROUND

In my decision (84 Cust. Ct. ——, C.D. 4856, 496 F. Supp. 266 (1980)) the imported merchandise, known as surge voltage protectors (SVPs), was held to be improperly classified by Customs as "other electrical apparatus * * * for the protection of electrical circuits" under item 685.90 of the Tariff Schedules of the United States (TSUS), but Siemens' alternative claim for classification as "electronic tubes" under item 687.60, TSUS was sustained. Further, it was determined that the SVPs, which contained a radioactive substance, were not classifiable under item 709.66, TSUS, as "Apparatus based on the use of radiations from radioactive substances," the provision Siemens had primarily claimed to be applicable.

The Court of Customs and Patent Appeals affirmed the dismissal of plaintiffs' claim under item 709.66, and agreed with my determination that the SVPs were "electronic tubes" within the purview of item 687.60. However, the Appellate Court concluded that the SVPs were more specifically described under item 685.90 than under item 687.60, and reversed and remanded for reasons indicated below. Judge Neis, joined by Chief Judge Markey, dissented-in-part, and wrote for affirmance of this Court's findings and judgment.

In its post-trial brief, Siemens contended that there was an improper change in an established and uniform practice regarding the duty rate to be applied to the SVPs, and also raised an issue concerning *stare decisis*. Inasmuch as I agreed with Siemens' argument that item 687.60 described the merchandise and that such provision was more specific than item 685.90, the above-mentioned issues were not reached. However, in view of its conclusion that item 685.90 more specifically describes the SVPs, the Appellate Court remanded the matter to this Court for consideration of the issues not reached.

CHANGE IN ESTABLISHED AND UNIFORM ADMINISTRATIVE PRACTICE

We first consider the issue raised by plaintiffs concerning an alleged improper change in an established and uniform practice regarding the duty rate to be applied to the SVPs. In this connection, plaintiffs

rely specifically upon 19 U.S.C. § 1315(d) and 19 CFR § 16.10(c) (1970). These provisions, so far as pertinent, read:

19 U.S.C. § 1315 (d)

(d) No administrative ruling resulting in the imposition of a higher rate of duty or charge than the Secretary of the Treasury shall find to have been applicable to imported merchandise under an established and uniform practice shall be effective with respect to articles entered for consumption or withdrawn from warehouse for consumption prior to the expiration of thirty days after the date of publication in the weekly Treasury Decisions of notice of such ruling; * * *

19 CFR § 16.10(c) (1970)

A change to a lower rate of duty, when decided upon, shall be applicable to all unliquidated entries and to all protested entries involving the same issue which have not been forwarded to the United States Customs Court.

Section 1315(d) was construed in *Ditbro Pearl Co., Inc.* v. *United States*, 62 CCPA 95, C.A.D. 1152, 515 F. 2d 1157 (1975). There, the Court stated (62 CCPA at 96):

> The key issue is "whether the Secretary of the Treasury (or his delegate) has made a 'finding' of 'an established and uniform practice' pursuant to section 315(d)." *Asiatic Petroleum Corp.* v. *United States*, 59 CCPA 20, 22, C.A.D. 1029, 449 F. 2d 1309 (1971). Such a "finding" does not appear in the record before us, and this "obviates any need for notice prior to an effective change." *Martin Brokerage Co.* v. *United States*, 36 Cust. Ct. 35, 39, C.D. 1750 (1956). The abstracted Customs Service decision, relied upon by appellant, T.D. 68–77(3), 2 Cust. Bull. 157 (1968), does not on its face, purport to be such a "finding" as required by section 315(d), nor does this abstract convey any "clear impression" that a "finding" under that section was intended. *Asiatic Petroleum Corp.* v. *United States*, supra.

As in *Ditbro Pearl*, the key issue here is "whether the Secretary of the Treasury (or his delegate) has made a 'finding' of 'an established and uniform practice' pursuant to section 1315(d)." It is apparent from the pertinent language of the statute, couched in the past tense, that the "established" practice Congress had in mind is an antecedent or existing (as well as uniform) practice.

In the present case, plaintiffs rely upon a letter ruling dated July 27, 1970, which clearly is a response to plaintiffs' request for a ruling concerning future or prospective importations of SVPs, and such letter ruling makes no reference whatsoever to any existing or "established" practice. Consequently, the July 27, 1970 letter ruling is not a finding of an established and uniform practice within the purview of section 1315(d).

When the Secretary of the Treasury or his delegate has intended to make a finding within the purview of section 1315(d), appropriate

language was used to accomplish that result. For example, T.D. 52816 (86 Treas. Dec. 333 (1951)).

> *To Collectors of Customs and Others Concerned:*
>
> *A practice has developed* of classifying all combination pocket and table cigarette lighters under paragraph 1552 of the Tariff Act of 1930, as modified, as smokers' articles, rather than under paragraph 1527(c), as modified, as articles designed to be carried on or about the person. *The practice developed after decisions had been rendered by the United States Customs Court* * * *.
>
> * * * * * * *
>
> However, as this ruling will result in the assessment of duty at a higher rate than has heretofore been assessed on combination lighters *under a uniform and established practice*, it shall be applied to such lighters only when entered or withdrawn from warehouse for consumption after 30 days after the publication of this decision in the weekly Treasury Decisions. [Emphasis added.]

More, compare the letter of November 5, 1965, written by the Acting Commissioner of Customs to the Collector of Customs at New York in *Asiatic Petroleum Corp.* v. *United States*, 59 CCPA 20, 21–22, C.A.D. 1029, 449 F. 2d 1309 (1971), which not only stated that the Bureau of Customs had given extensive consideration to the tariff treatment of the merchandise in unliquidated entries, but specifically mentioned the existence of an established and uniform practice.

Further, see the letter written by the Director, Classification and Value Division, dated August 31, 1976, set forth at length in the recent decision of our Appellate Court in *Rank Precision Industries, Inc.*, v. *United States*, 68 CCPA ——, C.A.D. 1269, —— F. 2d —— (1981), which made specific reference to *prior* liquidations and to a uniform and established practice.

The short of the matter is: here there was no "finding" by the Secretary of the Treasury or his delegate in the language of section 1315(d) or in words of similar import that an established and uniform practice existed as to the subject merchandise.

Significantly, plaintiffs do not contend that the letter of July 27, 1970 contains a finding of an established and uniform practice respecting the classification of SVPs. Rather, plaintiffs' position appears to be that the letter ruling and the subsequent liquidation of some 100 of plaintiffs' entries under item 687.60 over a period of approximately two years at the Port of New York created *de facto* an established and uniform practice as to the classification of SVPs. But I conclude that under all the facts and circumstances, evidence of such liquidated entries by a single importer at one port of entry for such relatively short period of time is inadequate to demonstrate the

"established and uniform practice" contemplated by § 1315(d). *Cf. Biddle Sawyer Corp.* v. *United States*, 48 Cust. Ct. 30, C.D. 2310 (1962), *aff'd* 50 CCPA 85, C.A.D. 826 (1963). In its brief (footnotes at p. 51), plaintiffs state that it was the sole importer of SVPs, and that such merchandise was imported solely at the port of New York. However, such assertions are unsupported by the record. Fundamentally, statements by counsel in a brief are not evidence. *Tropi-Cal* v. *United States*, 63 Cust. Ct. 518, C.D. 3945 (1969). In a word, the record does not adequately show there was, in fact, an established and uniform practice relative to the classification of SVPs.

Respecting plaintiffs' reliance upon 19 CFR § 16.10(c)(1970), there was no evidence submitted that this regulation was violated in the classification of the subject merchandise. Indeed, plaintiffs assert that "[i]n conformity with these regulations the Customs Service did in fact liquidate or reliquidate, as appropriate [under item 687.60] entries antecedent to the ruling [of July 27, 1970]". However, plaintiffs contend that "the Customs Service was required to continue to liquidate entries of merchandise subsequent to the July 27, 1970 ruling letter [under item 687.60], pursuant to the directive therein, until such time as a legal and lawfully promulgated change of practice or policy was implemented." I disagree.

The regulation relied upon by plaintiffs, 19 CFR § 16.10(c), applies only where there has been "A change in classification resulting in a lower rate of duty". There is nothing in the letter ruling of July 27, 1970 suggesting that it was issued in accordance with section 16.10(c). In any event, section 16.10(c), while applicable to unliquidated and protested entries, does not require a notice of a change in classification resulting in higher duties. *Cf.* 19 U.S.C. § 16.10(a). No other regulation has been cited by plaintiffs.[1] In sum, neither 19 U.S.C. § 1315(d) nor 19 CFR 16.10(c) can be the basis for sustaining plaintiffs' alternative claim under item 687.60, TSUS.

Stare Decisis

Plaintiffs argue that three prior abstracted judgments of the Customs Court are *stare decisis* in the present case. These judgments involved Siemens America, Inc. as plaintiff and are reported at 70 Cust. Ct. 393, 396 and 399 (1973). An examination of these abstracts reveals that the Court's decisions that the merchandise was classifiable under item 687.60 were predicated upon an "agreed statement of facts" submitted by the parties without trial or briefing of the issues or an

[1] Plaintiffs do not claim that 19 CFR 16.10a(c) (1970) is applicable. That regulation provides that any decision published pursuant to 19 CFR 16.10a(b) shall be deemed to establish a uniform practice within the meaning of section 1315(d) and also specifies the procedure for changing a published decision to impose higher duties.

opinion by the Court. Defendant has advised the Court in the present case that, since the date of those decisions, no further cases involving the classification of SVPs have been stipulated.

The determination of our Appellate Court in the instant case that the SVPs are more specifically described under item 685.90 than under item 687.60 shows that the abstracted judgments, which in effect hold to the contrary, are clearly erroneous. When a prior decision is clearly erroneous, *stare decisis* does not apply. *United States* v. *R. J. Saunders & Co., Inc.*, 42 CCPA 128, 136, C.A.D. 584 (1955); *Sol Raphael* v. *United States*, 23 CCPA 253, 258, T.D. 48110 (1936).

For the foregoing reasons, this action is dismissed, and judgment will be entered accordingly.

Judgments of the U.S. Court of International Trade in Appealed Cases

OCTOBER 2, 1981

Appeal 80-32.—UNITED STATES *v.* DAVID E. PORTER.—Seats for Rapid Transit Cars—Furniture—Parts of Rail Vehicles or Cars—TSUS—Summary Judgment.—C.D. 4808 as amended by C.D. 4857 affirmed March 12, 1981 (C.A.D. 1259).

OCTOBER 7, 1981

Appeal 80-36.—UNITED STATES *v.* PHILIPP OVERSEAS, INC.—Stainless Steel Angles—Angles of Alloy Iron or Steel: Drilled, Punched, or Otherwise Advanced; Not Drilled, Not Punched, and Not Otherwise Advanced—TSUS.—C.D. 4859 affirmed June 11, 1981 (C.A.D. 1263).

OCTOBER 8, 1981

Appeal 81-2.—WAY DISTRIBUTORS, INC. *v.* UNITED STATES.—Sheets of Rubber Used for Shoe Soles—Expanded Rubber—Rubber Sheets—Rubber Articles Not Specially Provided for—TSUS—Interpretative Rule; Administrative Procedure Act—American Manufacturers' Protest; Tariff Act of 1930.—C.D. 4870 Affirmed June 18, 1981 (C.A.D. 1265).

Appeal to U.S. Court of Customs and Patent Appeals

APPEAL 81-23—The United States *v.* Texas Instruments, Inc.—SOLID STATE ELECTRIC WATCH MODULES AND SOLID STATE ELECTRONIC WATCHES—TSUS—Appeal From Slip Op. 81-31—Summary Judgment.

The imported merchandise in this case consists of solid state electronic watch modules and solid state electronic watches entered at Lubbock, Texas, in June 1980. The solid state modules consist of a substrate upon which an integrated circuit chip, a capacitor, a quartz crystal, and a digital display are affixed. Also included as a part of the modules are additional stationary parts, such as a clip to contain batteries and electrical connections between the substrate and the digital display. The solid state electronic watches consist of plastic cases into which the solid state electronic modules are fitted and retained.

Upon liquidation, the customs service classified the solid state electronic watch modules under TSUS Item 716.18, and the solid state electronic watches under TSUS Item 715.05, and assessed duty thereon at 67¢ each.

Plaintiff-appellee claims that the imported merchandise is properly classifiable under TSUS Item 688.45 at a duty rate of 5.3% ad valorem. Accordingly, plaintiff-appellee files a motion for summary judgment based upon the affirming appellate decisions in *The United States* v. *Texas Instruments, Inc.*, C.A.D. 1244, 620 F. 2d 269 (1980), Aff'g. 82 Cust. Ct. 272, 475 F. Supp. 1183 (1979), and *The United States* v. *Texas Instruments, Inc.*, C.A.D. 1243, 620 F. 2d 272 (1980), Aff'g. 82 Cust. Ct. 287, 475 F. Supp. 1193 (1979).

Defendant-appellant, in its opposition to plaintiff-appellee's motion for summary judgment, claims that the above decisions are not controlling in this case; that genuine triable issues of fact exists; and files a cross-motion for leave to amend its answer, asserting as an alternative claim that the merchandise be classified under TSUS Item 740.38 at a duty rate of 25.4% ad valorem.

Based upon the evidence before it, the United States Court of International Trade held that no genuine issue of material fact exists; that the merchandise cannot be properly classified as liquidated,

nor under the claimed alternative classification; that the merchandise should be properly classified under TSUS Item 688.45, as claimed; and that plaintiff-appellee's motion for summary judgment is granted.

Defendant-appellant, being dissatisfied with the decision and judgment of the United States Court of International Trade, respectfully prays to the United States Court of Customs and Patent Appeals, pursuant to Sections 1514(a) and 2601 (a) and (b), Title 28, United States Code, to review the questions involved therein and to grant such relief in the premises as to the Court shall deem just.

International Trade Commission Notices

Investigations by the U.S. International Trade Commission

DEPARTMENT OF THE TREASURY, OCTOBER 22, 1981

The appended notices relating to investigations by the U.S. International Trade Commission are published for the information of Customs officers and others concerned.

WILLIAM VON RAAB,
Commissioner of Customs.

Investigation No. 751-TA-5

SALMON GILL FISH NETTING OF MANMADE FIBERS FROM JAPAN

Notice of Institution of Section 751(b) Review Investigation

AGENCY: United States International Trade Commission.

ACTION: Institution of Section 751(b) review investigation concerning affirmative determination in investigation No. AA1921-85, Fish Nets and Netting of Manmade Fibers from Japan.

SUMMARY: Notice is hereby given that the U.S. International Trade Commission has initiated an investigation pursuant to section 751(b) of the Tariff Act of 1930, 19 U.S.C. § 1675(b) (Supp. III 1979), to review its determination in investigation No. AA1921-85. The purpose of the investigation is to determine whether an industry in the United States would be materially injured, or would be threatened with material injury, or the establishment of an industry in the United States would be materially retarded, if the antidumping order regarding fish netting of manmade fibers from Japan were to be modified or revoked with respect to salmon gill fish netting of manmade fibers provided for in item 355.45 of the Tariff Schedules of the United States.

SUPPLEMENTARY INFORMATION: On April 18, 1972, the Commission determined that an industry in the United States was injured within the meaning of the Antidumping Act, 1921, by reason of im-

ports of fish netting of manmade fibers from Japan determined by the Secretary of Treasury to be sold or likely to be sold at less than fair value (hereinafter "LTFV").

On June 1, 1972, the Department of the Treasury issued a finding of dumping, T.D. 72–158, and published notice thereof in the Federal Register, 37 FR 11560.

The U.S. Department of Commerce published a notice of the preliminary results of an administrative review of the antidumping finding in this matter in the Federal Register of May 5, 1981 (45 FR 25118).

On July 28, 1981, the Commission received a request to review its affirmative determination in investigation No. AA1921–85. The request was filed under section 751(b) of the Tariff Act of 1930 by counsel representing nine Seattle, Washington/Portland, Oregon area importers of salmon gill fish netting from Japan.

The Commission requested comments from the public regarding the proposed institution of a review investigation in a notice published in the Federal Register on August 19, 1981 (46 FR 42219). Comments supporting the request for an investigation were received from counsel representing the Fishing Nets & Twine Division of the Japan Textile Products Exporters' Association and from counsel representing Trans-Pacific Trading, Inc., of Seattle, Washington. Comments in opposition to the request were filed on behalf of members of the American Netting Manufacturers Organization (ANMO). On the basis of the request for review and all comments filed concerning the request, the Commission on October 14, 1981, voted to institute investigation No. 751–TA–5. The Commission determined that the request showed the following changed circumstance sufficient to warrant review: since 1972 the volume of production of salmon gill fish netting in the United States has changed to such a degree that at the present time there is no significant manufacturing of salmon gill fish netting in the United States comparable to that imported into the United States from Japan.

The investigation will be conducted in accordance with section 207.45(b) of the Commission's Rules of Practice and Procedure (46 F.R. 18023) (March 23, 1981). The purpose of this investigation is to determine whether an industry in the United States would be materially injured, or would be threatened with material injury, or the establishment of an industry in the United States would be materially retarded if the present antidumping order were to be modified or revoked to exclude salmon gill fish netting of manmade fibers. Modification or revocation of the dumping finding as to salmon gill fish netting would not affect the Commission's affirmative determination as to other forms of fish netting of manmade fibers from Japan.

Dates.—Pursuant to section 207.45(b) of the Commission's Rules of

Practice and Procedure, the 120 day period for completion of this investigation begins on the date of publication of this notice in the Federal Register.

Written submissions.—Any person may submit to the Commission on or before December 23, 1981, written statements of information pertinent to the subject matter of the investigation. A signed original and nineteen true copies of such statements must be submitted in accordance with section 201.8 of the Commission's Rules of Practice and Procedure, 19 CFR § 201.8 (1980).

Any business information which a submitter desires the Commission to treat as confidential shall be submitted separately and each sheet must be clearly marked at the top "Confidential business data." Confidential submissions must conform with the requirements of section 201.6 of the Rules of Practice and Procedure (19 CFR 201.6). All written submissions, except confidential business data, will be available for public inspection. A staff report containing preliminary findings of fact will be available to all interested parties on November 25, 1981.

Public hearing.—The Commission will hold a public hearing in connection with this investigation on December 17, 1981, in the Hearing Room of the U.S. International Trade Commission Building, 701 E Street, NW., Washington, D.C. 20436, beginning at 10:00 a.m., e.s.t. Request to appear at the hearing should be filed in writing with the Secretary to the Commission not later than the close of business (5:15 p.m., e.s.t.), December 7, 1981. All persons desiring to appear at the hearing and make oral presentations should attend a prehearing conference to be held at 10:00 a.m., e.s.t., on December 9, 1981, in Room 117 of the U.S. International Trade Commission Building and must file prehearing statements on or before December 11, 1981. For further information concerning the conduct of the investigation, hearing procedures, and rules of general application, consult the Commission's Rules of Practice and Procedure Part 207, Subpart C (19 CFR 207), and Part 201, Subparts A through E (19 CFR 201).

The Commission has waived Commission rule 201.12(d), "submission of prepared statements," in connection with this investigation. This rule states that "Copies of witnesses" prepared statements should be filed with the Office of the Secretary of the Commission not later than 3 business days prior to the hearing and submission of such statements shall comply with section 201.6 and 201.8 of this subpart". It is nevertheless the Commission's request that parties submit copies of witnesses' prepared testimony as early as practicable before the hearing in order to permit Commission review.

FOR FURTHER INFORMATION CONTACT: Daniel Leahy, investigator, Office of Investigations, U.S. International Trade

Commission, (202) 523–1369 or Jane Albrecht, attorney, Office of the General Counsel, U.S. International Trade Commission, (202) 523–1627.

By Order of the Commission.

Issued: October 16, 1981.

KENNETH R. MASON,
Secretary.

In the Matter of
CERTAIN SCREW JACKS AND COMPONENTS THEREOF INCLUDING COLD WORKED PINION GEARS } Investigation No. 337–TA–98

Notice of Commission Request for Comments Regarding Proposed Termination of Investigation Based on a Settlement Agreement

AGENCY: U.S. International Trade Commission.

ACTION: A request for public comment on the proposed termination of this investigation based on a settlement agreement.

DATES: Comments will be considered if received within 30 days of the date of publication of this notice. Comments should conform with section 201.8 of the Commission's Rules of Practice and Procedure (19 CFR § 201.8), and should be addressed to Kenneth R. Mason, Secretary, U.S. International Trade Commission, 701 E Street NW., Washington, D.C. 20436.

SUPPLEMENTARY INFORMATION: Complainant Auto Specialties Manufacturing Co., respondents Seeburn Metal Products Ltd. and General Motors Corporation, and the Commission investigative attorney moved in a joint motion for termination of this investigation on the basis of a settlement agreement. On September 29, 1981, the presiding officer recommended that the joint motion be granted.

Notice of the institution of the investigation was published in the Federal Register of February 11, 1981 (46 FR 11924).

SETTLEMENT AGREEMENT: The settlement agreement provides as follows:

This agreement effective as of the 25th day of September, 1981, by and between Auto Specialties Manufacturing Company, a Michigan corporation having its principal place of business at 643 Graves Street, St. Joseph, Michigan 49085 (hereinafter referred to as AUSCO) and Seeburn Metal Products Limited, a corporation incorporated under the laws of the Province of Ontario, Canada, having its principal place of business at Box 460, Beaverton, Ontario Canada (hereinafter referred to as Seeburn).

Witnesseth

WHEREAS, on December 20, 1978, AUSCO initiated an action in the Trial Division of the Federal Court of Canada naming Seeburn as defendant and alleging infringement by Seeburn of claims 2–6 of Canadian Letters Patent No. 1,027,391 (hereinafter the Canadian litigation);

WHEREAS, AUSCO filed a complaint with the United States International Trade Commission (hereinafter the Commission) on January 8,1981 against Seeburn alleging infringement by Seeburn of claims 1–6 of United States Letters Patent No. 3,862,577, and that, thereafter, on February 11, 1981, the Commission instituted Investigation No. 337–TA–98 based on that complaint and naming General Motors Corporation (hereinafter General Motors) as a correspondent with Seeburn;

WHEREAS, on May 19, 1981, the Commission issued a notice of amendment of the aforesaid notice of investigation to include an allegation of infringement by Seeburn of claims 1, 2, and 5 of United States Letters Patent No. 3,977,267;

WHEREAS, Seeburn has denied the allegations of infringement in the Canadian litigation and in Investigation No. 337–TA–98 relative to Canadian Letters Patent No. 1,027,391 and United States Letters Patents Nos. 3,862,577 and 3,977,267;

WHEREAS, Seeburn has been licensed under AUSCO's United States Patent No. 3,862,743 and Canadian Patent No. 983,006 as a result of a license agreement dated June 24, 1975 and a controversy has arisen relative to the question of whether or not that license agreement terminated as of July 31, 1981; and

WHEREAS, AUSCO and Seeburn have now compromised and settled all issues embodied in the aforesaid Canadian litigation, the aforesaid Commission Investigation No. 337–TA–98 and the aforesaid license agreement dated June 24, 1975, under the terms of which settlement (a) Seeburn has agreed to pay to AUSCO and AUSCO has agreed to accept from Seeburn, as a royalty, the sum of ——— for a paid up license under and during the life of certain United States and Canadian patents, including those identified above, which royalty is in full, final and complete settlement of all claims arising out of the matters and things alleged in the aforesaid Canadian litigation, the aforesaid Commission Investigation No. 337–TA–98 and the aforesaid June 24, 1975 license agreement, and (b) AUSCO has agreed to dismiss the aforesaid Canadian litigation, has agreed to enter with Seeburn and General Motors into a joint motion to terminate the aforesaid Commission Investigation No. 337–TA–98, and further has agreed that

the Seeburn screw jacks currently being made for and shipped to General Motors, identified as GM Part Nos. 14018602 and 14018604, are not covered by any other existing AUSCO United States or Canadian patent or pending application.

NOW, THEREFORE, in consideration of the mutual promises, covenants and undertakings, herein set forth, AUSCO and Seeburn intending to be legally bound hereby agree as follows:

1. AUSCO and Seeburn shall enter into, by executing when they execute this settlement agreement, the attached Paid-Up License Agreement granting Seeburn a fully paid-up license under certain patents of AUSCO, including United States Patents Nos. 3,862,557, 3,862,743 and 3,977,267 as well as Canadian patents Nos. 983,006, and 1,027,391.

2. Seeburn agrees to pay to AUSCO, as a royalty, ——— the ———, within thirty (30) days after execution of this agreement.

3. AUSCO will promptly proceed to file whatever papers are necessary to dismiss and/or terminate the aforesaid Canadian litigation.

4. AUSCO will enter with Seeburn and General Motors into a joint motion to terminate the aforesaid Commission Investigation No. 337-TA-98.

5. AUSCO agrees that the structure embodied in the screw jacks currently made for General Motors by Seeburn and now identified as GM Part Nos. 14018602 and 14018604 are not covered by any other existing AUSCO United States or Canadian patent or pending application not identified in the attached Paid-Up License Agreement and, further, that AUSCO will not bring suit against Seeburn on any such other existing United States or Canadian patent or any United States or Canadian patent that issues as a result of any now pending AUSCO United States or Canadian patent application.

6. Each party hereto does hereby release and forever discharge the other party hereto and its successors and assigns of and from any and all claims, demands, suits, actions and causes of action, either in law or in equity which said party now has or may hereafter have, against the other party, arising out of or in any manner connected with, either directly or indirectly, any of the matters and things alleged in the aforesaid Canadian litigation and in the aforesaid Commission Investigation No. 337-TA-98.

7. Each of the undersigned covenants and represents that the compromise settlement agreement which is being consummated by the execution of this settlement agreement and of the attached Paid-Up License Agreement by AUSCO and Seeburn, by the royalty payment to AUSCO by Seeburn, referred to in paragraph No. 2, above, and by the acceptance thereof by AUSCO is the compromise of disputed

claims, and that the aforesaid royalty payment and receipt thereof, as well as the execution of this settlement agreement and of the attached Paid-Up License Agreement shall not be construed as an admission of liability on the part of Seeburn who expressly denies any and all liability to AUSCO on or under the issues and matters pleaded in the aforesaid complaints and amended complaint and set forth in the notice of investigation in the aforesaid Commission Investigation No. 337-TA-98.

PAID-UP LICENSE AGREEMENT: This agreement effective as of the 25th day of September, 1981, by and between Auto Specialties Manufacturing Company, a Michigan corporation having a principal place of business at St. Joseph, Michigan (hereinafter called AUSCO) and Seeburn Metal Products Limited, a Canadian corporation having a principal place of business at Beaverton, Ontario, Canada (hereinafter called SEEBURN);

Witnesseth

WHEREAS, AUSCO is the owner of the following United States and Canadian Letters Patent pertaining to screw jacks and parts therefor:

U.S. Patent No. 3,862,577—Screw Jack Pinion Gear and Method of Making Same;
U.S. Patent No. 3,862,743—Vertical Stress Side Load Member Screw Jack;
U.S. Patent No. 3,895,422—Screw Jack Pinion Gear and Method of Making Same;
U.S. Patent No. 3.977,267—Powdered Metal Gear For Screw Jack;
Canadian Patent No. 983,006—Vertical Stress Side Load Member Screw Jack;
Canadian Patent No. 1,021,762—Powdered Metal Gear For Screw Jack;
Canadian Patent No. 1,027,391—Screw Jack Pinion Gear and Method of Making Same;

WHEREAS, SEEBURN desires a non-exclusive license under each of the aforesaid patents and AUSCO is willing to grant such a license;

NOW, THEREFORE, in consideration of one Dollar ($1.00) and other good and valuable consideration, receipt of which is hereby acknowledged by AUSCO, AUSCO hereby grants to SEEBURN and SEEBURN hereby accepts a non-exclusive, paid-up, irrevocable license under each of the aforesaid United States and Canadian Letters Patent to make, use and sell the methods and structures incorporating the inventions defined in any or all of the claims of said patents throughout the United States and Canada and their territories and possessions.

It is understood that the license granted herein does not include

any right or licenses under any other patent now owned or hereafter acquired by AUSCO; provided that, with respect to the structures embodied in SEEBURN's current production of screw jacks now identified as GM Model No. 14018602 and Model No. 14018604, AUSCO agrees that it will not sue SEEBURN or its customers for alleged infringement of any of AUSCO's present United States or Canadian patents not specifically licensed herein or such patents issuing from any presently pending application for patent.

WRITTEN COMMENTS REQUESTED: In order to discharge its statutory obligation to consider the public interest, the Commission seeks written comments from interested persons regarding the effects of terminating this investigation on the basis of the settlement agreement on (1) the public health and welfare, (2) competitive conditions in the U.S. economy, (3) the production of like or directly competitive articles in the United States, and (4) U.S. consumers. All written comments must be filed with the Secretary to the Commission no later than 30 days after the date of publication of this notice in the Federal Register. In addition, pursuant to 19 CFR § 210.14(a)(2), the Commission has requested comments from the Department of Health and Human Services, the Department of Justice, the Federal Trade Commission, and the U.S. Customs Service.

ADDITIONAL INFORMATION: The original and 19 copies of all written submissions must be filed with the Secretary to the Commission, 701 E Street NW., Washington, D.C. 20436, telephone 202–523–0161. Any person desiring to submit a document (or portion thereof) to the Commission in confidence must request *in camera* treatment. Such requests should be directed to the Secretary to the Commission and must include a full statement of the reasons why the Commission should grant such treatment. The Commission will either accept the submission in confidence or return it. All nonconfidential written submissions will be available for public inspection at the Secretary's office.

FOR FURTHER INFORMATION CONTACT: Jeffrey S. Neeley, Esq., Office of the General Counsel, U.S. International Trade Commission, 701 E Street NW., Washington, D.C. 20436; telephone 202–523–0359.

By order of the Commission.

Issued: October 15, 1981.

KENNETH R. MASON,
Secretary.

In the Matter of	
CERTAIN HOT AIR CORN POPPERS AND COMPONENTS THEREOF	Investigation No. 337-TA-101

Notice to All Parties

Notice is hereby given that a conference will be held in this case at 2 p.m. on October 16, 1981, in the Dodge Center, Room 201, 1010 Wisconsin Avenue, N.W., Washington, D.C.

Issued: October 13, 1981.

JANET D. SAXON,
Administrative Law Judge.

In the Matter of	
CERTAIN HOT AIR CORN POPPERS AND COMPONENTS THEREOF	Investigation No. 337-TA-101

Order No. 16: Order Redesignating Presiding Officer

Pursuant to my authority as Chief Administrative Law Judge of this Commission and for reasons of judicial administration, I hereby designate Administrative Law Judge Janet D. Saxon as the Presiding Officer in this investigation and hereby relieve Administrative Law Judge Donald K. Duvall, effective this date.

The Secretary shall serve a copy of this order upon all parties and shall publish it in the Federal Register.

Issued: October 9, 1981.

DONALD K. DUVALL,
Chief Administrative Law Judge.

In the Matter of	
CERTAIN AIRTIGHT WOOD STOVES	Investigation No. 337-TA-92

Notice of Termination of Investigation and Rejection of Consent Order Agreements

AGENCY: U.S. International Trade Commission.

ACTION: Notice of termination of investigation and rejection of consent order agreements.

SUPPLEMENTARY INFORMATION: In connection with a complaint filed on October 16, 1980, under section 337 of the Tariff Act of 1930 (19 U.S.C. § 1337), alleging unfair acts and methods of

competition in the importation into or sale in the United States of certain airtight wood stoves, the Commission on December 17, 1980, published a notice of investigation in the Federal Register (45 FR 83034). The Commission stated that the investigation was being undertaken to determine whether section 337 is being violated by reason of infringement of complainant Energy Harvesters Corp. common law trademark rights or of U.S. Patent Des. 253,189 or by passing off or deceptive advertising and marketing of stoves like those of the complainant, Energy Harvesters Corp.

On July 6, 1981, the Commission investigative attorney filed two motions, Motion 92–7 and Motion 92–8. Motion 92–7 asked that the Commission terminate this investigation because the consent orders signed in investigation No. 337–TA–106, in which respondents Franklin Cast Products, Inc., and Oriental Kingsworld Industrial Co., Ltd. agreed not to import the stoves in question in this investigation, rendered the present investigation moot. On July 31, 1981, the administrative law judge (ALJ) denied motion 92–7. The Commission investigative attorney moved pursuant to section 210.60(b) of the Commission's Rules of Practice and Procedure for leave to file an application for interlocutoy review of the ALJ's ruling on motion 92–7. The ALJ granted leave to file that application on August 21, 1981, and the application itself was filed on September 4, 1981.

The second motion, Motion 92–8, was filed jointly by the Commission investigative attorney, Franklin Cast Products, Inc., Oriental Kingsworld Industrial Co., Ltd., and Unity Buying Service Co., Inc., pursuant to sections 210.51 and 210.20 of the rules. Motion 92–8 requested termination of this investigation based on consent order agreements signed by the Commission investigative attorney and the respondents, but not by the complainant. On July 31, 1981, the ALJ denied motion 92–8 because complainant Energy Harvesters Corp. had not signed the consent orders and therefore the agreements did not comply with section 211.20(b) of the rules. The ALJ also certified the motion to the Commission and stayed the proceedings.

On October 8, 1981, the Commission granted motion 92–7 and terminated investigation No. 337–TA–92 as moot. The Commission also denied motion 92–8 as moot because motion 92–7 has been granted and the investigation terminated.

Copies of the Commission's Action and Order and all other nonconfidential documents in the record of this investigation are available for inspection during official business hours (8:45 a.m. to 5:15 p.m.) in the Office of the Secretary, U.S. International Trade Commission, 701 E Street NW., Washington, D.C. 20346, telephone 202–523–0161.

FOR FURTHER INFORMATION CONTACT: Jeffrey S. Neeley,

Esq., Office of the General Counsel, U.S. International Trade Commission, telephone 202–523–0359.

By order of the Commission.

Issued: October 9, 1981.

KENNETH R. MASON,
Secretary.

In the Matter of CERTAIN HOT AIR CORN POPPERS AND COMPONENTS THEREOF	Investigation No. 337–TA–101

Notice of Amendment of Complaint and Notice of Investigation To Include an Additional Party Respondent and Extension of Time for the Presiding Officer To Conduct a Hearing, To Certify the Record, and To File a Recommended Determination

AGENCY: U.S. International Trade Commission.

ACTION: (1) Granting of motion to amend complaint and notice of investigation to include—Hamilton Beach Division—Scovill Inc., 59 Mill Street, Waterbury, Conn. 06720 as an additional party respondent.

(2) Waiver of time restrictions imposed by 19 CFR § 210.41(e) and § 210.53(a) and extension of time for the presiding officer to conduct an evidentiary hearing, to certify the record, and to file a recommended determination of whether there is a violation of section 337 of the Tariff Act of 1930.

AUTHORITY: This investigation is being conducted under the authority of subsection (b) of section 337 of the Tariff Act of 1930 (19 U.S.C. § 1337(b)). Notice of amendment of complaint and notice of investigation is governed by 19 CFR § 210.20(d) and § 210.22. Pursuant to 19 CFR § 210.41(e) and § 210.53(a), the Commission may allow a longer time for the presiding officer to conduct an evidentiary hearing and to file a recommended determination.

SUPPLEMENTARY INFORMATION: The Commission is conducting investigation No. 337–TA–101 in order to determine whether there is a violation of section 337 of the Tariff Act of 1930 (19 U.S.C. § 1337) in the importation of certain hot air corn poppers and components thereof into the United States, or in the sale of such articles, which are alleged to infringe claims 1, 2, 3, and 5 of U.S. Letters Patent 4,178,843 with the effect or tendency to destroy or substantially injure an industry, efficiently and economically operated, in the United States. These proceedings were initiated on the basis of an amended

complaint filed on behalf of the assignee of the patent, Wear-Ever Aluminum, Inc., a wholly-owned subsidiary of the Aluminum Co. of America.

The notice instituting the investigation and defining its scope was published in the Federal Register on May 22, 1981 (46 FR 28043). The parties named as respondents included two foreign firms that produce the allegedly infringing apparatus and supply it to domestic distributors—Yamada Electric Industries, Ltd. of Tokyo, Japan and Chiap Hua Clocks and Watches Ltd., of Hong Kong—and five domestic firms which the complainant has accused of importing and selling the subject merchandise—The West Bend Co., a division of Dart Industries Inc., Sunbeam Corp., Maxim Associates Corp., K-Mart Corp., and the Stop & Shop Companies, Inc. The General Electric Co. was subsequently designated as an additional party respondent when the Commission granted on its motion to intervene in the investigation.

On August 24, 1981, the complainant filed a motion (No. 101–5) to amend the complaint and notice of investigation in order to add Hamilton Beach Division—Scovill Inc. (Hamilton Beach), as an additional party respondent, since that company has begun importing into the United States components of the hot air corn poppers which are the subject of this investigation. Respondents Chiap Hua and West Bend subsequently filed responses opposing the motion. On September 21, 1981, the presiding officer issued an order recommending, among other things (1) that the Commission amend the complaint and notice of investigation to include Hamilton Beach as an additional party respondent and (2) that, as a condition of such amendment, the Commission should waive the time restrictions of 19 CFR § 210.41(e) and § 210.53(a) thereby allowing the presiding officer to file a recommended determination within 10 months (rather than 9 months) after the date of publication of the notice of investigation.

Upon consideration of the motion (No. 101–5) to amend and the responses thereto, the second amended complaint, the recommendation of the presiding officer, and all other documents on the record developed in this investigation, on October 8, 1981, the Commission decided to grant Motion No. 101–5 and to deem the notice of investigation previously issued on May 18, 1981, and published in the Federal Register on May 22, 1981 (46 FR 28043) amended to include Hamilton Beach Division—Scovill Inc. as an additional party respondent. Having granted the complainant's motion, the Commission also decided to waive the time limitations imposed by the 19 CFR § 210.41(e) and § 210.53(a) and to extend the time for the presiding officer to conduct an evidentiary hearing, to certify the record, and to file a recommended determination within 10 months from the date on which the notice of investigation was published in the Federal Register.

Copies of the Commission's Action and Order, as well as all other nonconfidential documents on the record of this investigation, are available for public inspection during official business hours (8:45 a.m. to 5:15 p.m.) in the Office of the Secretary, U.S. International Trade Commission, 701 E Street NW., Room 156, Washington, D.C. 20436, telephone 202–523–0471.

FOR FURTHER INFORMATION CONTACT: P. N. Smithey, Esq., Office of the General Counsel, U.S. International Trade Commission, 701 E Street NW., Room 224, Washington, D.C. 20436, telephone 202–523–0350.

By order of the Commission.

issued: October 8, 1981.

KENNETH R. MASON,
Secretary.

Investigation No. 731–TA–50 (Preliminary)

STAINLESS CLAD STEEL PLATE FROM JAPAN

AGENCY: United States International Trade Commission.

ACTION: Institution of a preliminary antidumping investigation and scheduling of a conference to be held in connection with the investigation.

SUMMARY: The U.S. International Trade Commission hereby gives notice of the institution of investigation No. 731–TA–50 (Preliminary) to determine, pursuant to section 733(a) of the Tariff Act of 1930 (19 U.S.C. §1673b(a)), whether there is a reasonable indication that an industry in the United States is materially injured, or is threatened with material injury, or the establishment of an industry in the United States is materially retarded, by reason of imports from Japan of stainless clad steel plate, provided for in item 607.94 of the Tariff Schedules of the United States, which are alleged to be, or likely to be, sold in the United States at less than fair value.

EFFECTIVE DATE: October 6, 1981.

FOR FURTHER INFORMATION CONTACT: Judith C. Zeck, Office of Investigations, U.S. International Trade Commission; telephone (202–523–0339).

SUPPLEMENTARY INFORMATION:

Background.—This investigation is being instituted following receipt of a petition on October 6, 1981, filed in behalf of the U.S. clad plate industry by Lukens Steel Co., Coatesville, Penn., a producer of stainless clad steel plate. The Commission must make its determination

in the investigation within 45 days after the date on which the petition was filed, or by November 20, 1981 (19 CFR §207.17). The investigation will be subject to the provisions of part 207 of the Commission's Rules of Practice and Procedure (19 CFR §207, 44 FR 76457), and particularly subpart B thereof.

Written submissions.—Any person may submit to the Commission on or before November 3, 1981, a written statement of information pertinent to the subject matter of this investigation. A signed original and nineteen copies of such statements must be submitted.

Any business information which a submitter desires the Commission to treat as confidential shall be submitted separately and each sheet must be clearly marked at the top "Confidential Business Data." Confidential submissions must conform with the requirements of section 201.6 of the Commission's Rules of Practice and Procedure (19 CFR §201.6). All written submissions, except for confidential business data, will be available for public inspection.

Conference.—The Director of Operations of the Commission has scheduled a conference in connection with this investigation for 10 a.m., e.s.t., on October 29, 1980, at the U.S. International Trade Commission Building, 701 E Street, NW., Washington, D.C. Parties wishing to participate in the conference should contact the supervisory investigator for the investigation, Mr. Lynn Featherstone (202–523–0242). It is anticipated that parties in support of the petition for antidumping duties and parties opposed to the petition will each be collectively allocated one hour within which to make an oral presentation at the conference. Further details concerning the conduct of the conference will be provided by the supervisory investigator.

Inspection of petition.—A copy of the petition in this case is available for public inspection at the Office of the Secretary, U.S. International Trade Commission.

For further information concerning the conduct of the investigation and rules of general application, consult the Commission's Rules of Practice and Procedure, part 207, subparts A and B (19 CFR §207), and part 201, subparts A through E (19 CFR §201).

This notice is published pursuant to section 207.12 of the Commission's Rules of Practice and Procedure (19 CFR §207.12).

By order of the Commission.

Issued: October 8,1981.

KENNETH R. MASON,
Secretary.

Index

U.S. Customs Service

Treasury decisions:	T.D. No.
Bonds: Carrier bonds	81-272
Customhouse broker license	81-274
Synopses of drawback decision	81-273

DEPARTMENT OF THE TREASURY
U.S. CUSTOMS SERVICE
WASHINGTON, D.C. 20229

OFFICIAL BUSINESS
PENALTY FOR PRIVATE USE, $300

POSTAGE AND FEES PAID
DEPARTMENT OF THE TREASURY (CUSTOMS)
(TREAS. 552)

U.S. GOVERNMENT PRINTING OFFICE: 1981

15/45

Customs Bulletin

Regulations, Rulings, Decisions, and Notices concerning Customs and related matters

and Decisions

of the United States Court of Customs and Patent Appeals and the United States Court of International Trade

Vol. 15 NOVEMBER 11, 1981 No. 45

NEWARK PUBLIC LIBRARY
DEC 8 1981
U. S. GOVT. PUBS.
DEPOSITORY 376

This issue contains

T.D. 81-275 Through 81-277
C.S.D. 81-211 Through 81-230
Proposed Rulemaking
Slip Op. 81-92 and 81-93
Protest Abstracts P81/161 Through P81/174
Reap. Abstracts R81/363 Through R81/367
International Trade Commission Notices

THE DEPARTMENT OF THE TREASURY
U.S. Customs Service

T 1.11/3:

NOTICE

The abstracts, rulings, and notices which are issued weekly by the U.S. Customs Service are subject to correction for typographical or other printing errors. Users may notify the U.S. Customs Service, Logistics Management Division, Washington, D.C. 20229, of any such errors in order that corrections may be made before the bound volumes are published.

For sale by the Superintendent of Documents, U.S. Government Printing Office, Washington, D.C. 20402. Price: $2.25 (single copy domestic); $2.85 (single copy foreign). Subscription price: $85.00 a year domestic; $106.25 a year foreign.

U.S. Customs Service

Treasury Decisions

(T.D. 81-275)

Bonds

Approval of authorized Facsimile signature; T.D.'s 79-241 and 81-49 amended.

Peerless Insurance Company, Keene, New Hampshire, has requested that the name of Franklin Ostroff, attorney-in-fact, be added to the list of authorized facsimile signatures published in Treasury Decision 79-241 as amended by Treasury Decision 81-49, and on file with the Customs Service for use on Customs bonds upon which it acts as surety.

Peerless Insurance Company has furnished the Customs Service with copies of Mr. Ostroff's signature and a certified copy of the corporate resolution agreeing to be bound by the facsimile signature.

The name of Franklin Ostroff, attorney-in-fact, is hereby added to the list of authorized facsimile signatures on file for Peerless Insurance Company.

BON-3-01

Dated: October 23, 1981.

MARILYN G. MORRISON,
Director,
Carriers, Drawback and Bonds Division.

(T.D. 81-276)

Customs Approved Public Gauger

Approval of public gauger performing gauging under standards and procedures required by Customs

Notice is hereby given pursuant to the provisions of section 151.43 of the Customs Regulations (19 CFR 151.43) that the application of Hull and Cargo Surveyors, Inc., 161 William Street, New York, New York 10038, to gauge imported petroleum and petroleum prod-

ucts in the Customs District of San Juan in accordance with the provisions of section 151.43 of the Customs Regulations is approved.

Dated: October 26, 1981.

ANTHONY L. PIAZZA,
Acting Director, Entry Procedures and Penalties Division.

[Published in the Federal Register Oct. 30, 1981 (46 FR 53829)]

(T.D. 81-277)

Cancellation of Customs Approved Public Gauger

Cancellation of Approval to act as a Public gauger for Customs purposes

Notice is hereby given pursuant to the provisions of section 151.43 of the Customs Regulations (19 CFR 151.43) that the approval of Caribbean Petroleum Inspectors, Inc., P.O. Box 6992, Christiansted St. Croix, U.S.V.I. 00820, to gauge imported petroleum and petroleum products in the Customs Districts of San Juan, Puerto Rico and Charlotte Amalie, St. Thomas, Virgin Islands, in accordance with the provisions of section 151, Subpart C, of the Customs Regulations is hereby cancelled.

Dated: October 26, 1981.

ANTHONY L. PIAZZA,
Acting Director, Entry Procedures and Penalties Division.

[Published in the Federal Register, Oct 30, 1981 (46 FR 53829)]

U.S. Customs Service

Customs Service Decisions

U.S. DEPARTMENT OF THE TREASURY,
OFFICE OF THE COMMISSIONER OF CUSTOMS,
Washington, D.C.

The following are decisions made by the United States Customs Service where the issues involved are of sufficient interest or importance to warrant publication in the CUSTOMS BULLETIN.

DONALD W. LEWIS,
Director,
Office of Regulations and Rulings.

(C.S.D. 81-211)

Classification: Different Types of Naphthas Manufactured From Canadian Crude Oil at an Ontario Refinery

Date: March 31, 1981
File: CLA-2 CO:R:CV:G
066217 JH

This is in reference to your inquiry concerning the classification of different types of naphthas manufactured from Canadian crude oil at an Ontario Refinery.

Shell-Sol/Mineral Spirits is understood to be obtained by the distillation of crude oil. It was not obtained from products described in Subpart A in the benzenoid section of the tariff schedules; it does not contain any added synthetic components and was not produced artificially by synthesis. It is a mixture of approximately 11 percent by volume of aromatic hydrocarbons. As it conforms to the specification for petroleum naphtha and is obtained by distillation of crude oil, this product is classifiable under the provision for naphthas, obtained from crude oil, in item 475.35, Tariff Schedules of the United States (TSUS), dutiable at 0.25 cent per gallon.

Cyclo-Sol 53 is said to be distilled into straight run gasoline in the crude distillation column. A catalyst is used to convert low octane components (Paraffins and Naphthenes) into higher octane aromatics.

It is a mixture containing approximately 35 percent by weight of benzenoid products and 65 percent by weight of alkylbenzenes. The product was artificially produced by synthesis, but does not contain any added synthetic benzenoid components.

Cyclo-Sol 53 is a solvent mixture essentially of benzenoid components, 35% by weight, it is classifiable under the provision for mixtures in item 407.15, with the rate applicable to highest component material. The highest rate component material is that of alklbenzenes in item 402.36, TSUS, at 1.4 cents/lb plus 17.3 percent ad valorem.

Crude oil is distilled into kerosene. A physical separation takes place in the extraction unit whereby approximately 99.5 percent of the aromatics (Cyclo-Sol 63) are removed from the kerosene stream. It is a mixture containing by weight not over 50 percent of any single hydrocarbon and consists essentially of products having a benzenoid structure, but was not obtained from a benzenoid source; it was not produced by synthesis and does not contain any added synthetic benzenoid components.

Cyclo-Sol 63 is essentially a mixture of hydrocarbons not specially provided for, derived from petroleum, which contain not over 50 percent of any single hydrocarbon compound by weight, in item 475.65, TSUS, dutiable at 0.25 cent per gallon.

(C.S.D. 81-212)

Temporary Importation Bond: Bond Liability May Be Cancelled Only Upon Timely Exportation or Destruction of All Articles Entered Under TIB

Date: April 22, 1981
File: CON-9-CO:R:CD:D L 212803

Issue: May liability under a temporary importation bond (TIB) be cancelled in part upon exportation of a portion of the merchandise admitted temporarily free of duty under bond?

Facts: Seven motor vehicles and attendent equipment were imported into the United States temporarily free of duty under bond under item 864.30, Tariff Schedules of the United States (TSUS), for the purpose of EPA emissions field testing. The field testing of the engines has been completed and the importer wishes to export the engines and incidental equipment and obtain partial cancellation of the TIB entries to the extent of the value of the exported engines and incidental equipment. The TIB importer will retain the vehicles in the United States, install new engines imported under consumption entries, perform EPA field testing on the replacement engines,

remove the replacement engines, and export the vehicles, cancelling the TIB's in full.

Law and analysis: We note initially that it is unclear from the inquiry whether the motor vehicles admitted under item 864.30, TSUS, are for testing or whether only the engines installed in the vehicles are being tested. If the engines only are being tested we assume, for the purposes of this response, that the entire vehicle is a necessary adjunct to the testing performed.

Headnote 1(a) to Part 5C, Schedule 8, TSUS, provides in part that articles described in that subpart, when not imported for sale on approval, may be admitted into the United States without the payment of duty, under bond for their exportation within 1 year from the date of importation, which period may be extended to a maximum of 3 years.

Section 10.39(a), Customs Regulations (19 CFR 10.39(a)) provides in part that bonds taken pursuant to Schedule 8, Part 5C, TSUS, may be cancelled in the manner prescribed in section 113.55. Section 113.55(b)(1), Customs Regulations (19 CFR 113.55(b)(1)), provides that a bond to assure the exportation of merchandise may be cancelled upon exportation.

There is no provision for "partial" cancellation of a bond. The bond may be cancelled only upon timely exportation or destruction of all the articles covered by the TIB entry and bond (with the exception of the recent amendment of Headnote 2(b)(ii), Part 5C, Schedule 8, TSUS, allowing the retention of valuable wastes in the United States upon tender of duties). Neither is there any legal requirement that all articles imported under a single TIB entry be exported at the same time, although practical considerations suggest that clearance procedures are simplified where all articles imported under a specific TIB are exported at the same time.

The inquirer indicates that one port would require an application for manipulation and the presence of a Customs Inspector when the engines are removed from the vehicles. We find no provision of law or regulation requiring an application for manipulation and the presence of a Customs Inspector for the described operation involving articles admitted under TIB. Pursuant to section 10.38(a), Customs Regulations (19 CFR 10.38(a)), of course, the district director may require such examination and identification of the articles as circumstances warrant.

Holding: Bonds taken pursuant to Schedule 8, Part 5C, TSUS, may be cancelled only upon timely exportation or destruction of all articles admitted under the TIB entry, with an exception not applicable here.

Articles admitted under TIB may be exported or destroyed at

any time within the TIB period, or any lawful extension thereof, either wholly or in part; however, where there are partial exportations within the bond period, the entire amount of the bond shall remain in effect pending timely exportation or destruction of all articles admitted under the bond.

There is no requirement for an application for manipulation and Customs supervision for the removal of engines from motor vehicles admitted under TIB prior to exportation of the engines.

(C.S.D. 81-213)

Temporary Importation Under Bond: Privileged Foreign Status Merchandise May Not Be Temporarily Imported Under Bond From a Foreign-Trade Zone

Date: May 5, 1981
File: CO:R:CD:D
212808 WR

Issue: Whether privileged foreign merchandise may be entered for warehouse or temporarily imported under bond from a foreign-trade zone?

Facts: No facts were presented.

Law and analysis: Customs Service Decision 81-71 (C.S.D. 81-71), which was circulated as Legal Determination 80-0193, held that merchandise temporarily imported under bond from a zone must be exported or destroyed to cancel the bond liability. If returned to a foreign-trade zone; that merchandise must be admitted only as zone-restricted merchandise. Customs Service Decision 79-454 (C.S.D. 79-454;, which was circulated as Legal Determination 79-0279, held that merchandise may be entered into the Customs territory from a foreign-trade zone by a temporary importation under bond.

The first proviso to section 3 of the Foreign Trade Zones Act of 1934, as amended (19 U.S.C. 81c), provides that when foreign merchandise in a zone has been given privileged status, that merchandise may be sent into the United States on payment of the liquidated duties and determined taxes. In promulgating section 146.48(c) of the Customs Regulations, the Customs Service interpreted that provision to prohibit articles composed of or derived in part from privileged foreign merchandise from being entered for warehousing from a foreign-trade zone. The Customs Service has ruled that privileged foreign merchandise may not be withdrawn from a foreign-trade zone and entered into a Customs bonded warehouse for any purpose. See Customs Service Decision 81-8 (C.S.D. 81-8), which was circulated as Legal Determination 80-0124. The basis for the holding

in C.S.D. 81–8 was the belief that the first proviso to 19 U.S.C. 81c forbids any delay in the payment of duties, a circumstance that would occur if privileged foreign merchandise were allowed to be entered into a Customs bonded warehouse from a zone.

For similar reasons, privileged foreign merchandise may not be temporarily imported under bond from a zone.

Holding: The decisions published as C.S.D. 79–454 and C.S.D. 81–71 are not applicable to privileged foreign status merchandise. Privileged foreign status merchandise may not be temporarily imported under bond into the Customs territory from a foreign-trade zone.

(C.S.D. 81–214)

Vessels: Applicability of Coastwise Laws to the Towing of U.S.-Flag Drilling Rigs by a Foreign-Flag Tug Between Sites on the U.S. Outer Continental Shelf

Date: May 6, 1981
File: VES–3–15
VES–10–03
CO:R:CD:C
105063 PH

This ruling concerns the application of the coastwise laws to the towing of United States-flag oil drilling rigs by a foreign-flag tug between drilling sites on the United States outer continental shelf.

Issue: 1. Is 46 U.S.C. 316(a) violated if a United States-flag semi-submersible drilling rig is towed by a foreign-flag towing vessel from a location on the outer continental shelf at which it has completed exploration for oil to a new drilling site on the outer continental shelf which is—

a. marked by a buoy marker attached to the outer continental shelf, or

b. not marked by any device attached to the outer continental shelf.

2. Are the coastwise laws violated if crewmembers, equipment, and supplies of a drilling rig, to be used solely by the drilling rig, are carried aboard the rig from a location on the outer continental shelf at which the rig has completed exploration for oil to a new drilling site on the outer continental shelf which is—

a. marked by a buoy marker attached to the outer continental shelf.

b. not marked by any device attached to the outer continental shelf.

Facts: It is proposed to use a foreign-flag tugboat to tow United States-flag semi-submersible oil drilling rigs from a location on the outer continental shelf off the Texas coast to another location on the

outer continental shelf off the Florida coast. Both points are more than three miles offshore.

The location from which a drilling rig would be towed would be one at which petroleum exploration has been successfully or unsuccessfully completed. Before the towline from the tug would be connected to the drilling rig, all drilling equipment would have been lifted out of the seabed back onto the rig and, "normally", a cap or plug would have been placed in the hole from which the drilling equipment has been withdrawn. At the time the towline is connected to the drilling rig, the drilling rig would be held in place by 4 to 12 anchors attached to the seabed. After connection of the towline to the drilling rig, the anchors would be raised and, when they had been fully lifted and no device from the drilling rig was attached to the seabed, the tug would begin towing the drilling rig to its new location.

Upon its arrival at the destination, the tugboat would tow the drilling rig several hundred feet past the drilling site against the current. Two or three anchors would be dropped and after the drilling rig had floated back with the current over the drilling site, two or three additional anchors would be dropped to the seabed. After the rig had been anchored in placed and before drilling operations had commenced, the towline would be disconnected.

Drilling sites to which the drilling rigs would be towed would be marked by marker buoys if the sites were located in shallower water (up to 200–300 feet in depth). Drilling sites in water of greater depths would be located by the use of satellite navigation equipment on the drilling rigs and tugboat.

Certain crew members, equipment, and supplies such as drill bits, tools, piping, and fuel, may be carried aboard the drilling rig between the drilling sites. The equipment would have been aboard the drilling rig at the drilling sites off Texas and, with any necessary replacements for damaged or lost equipment or supplies, would be used solely by the rig at the destination drilling site.

Law and analysis: Title 46, United States Code, section 316(a), in part, prohibits the use of a foreign-flag vessel to tow a United States-flag vessel from any port or place embraced within the coastwise laws of the United States to another such port or place, or for any part of the tow. Section 883 of title 46 contains a similar prohibition against the coastwise transportation of merchandise in any vessel other than a vessel built in and documented under the laws of the United States, and owned by a citizen of the United States. Section 289 of title 46 and other statutes (see e.g., 46 U.S.C. 11) prohibit foreign vessles, vessels not qualified to engage in the coastwise trade, and vessels lacking proper documentation from transporting passengers between places in the United States, either directly or by way of a foreign port.

Section 4(a) of the Outer Continental Shelf Lands Act of 1953, as amended by the Outer Continental Shelf Lands Act Amendment of 1978 (43 U.S.C. 1333(a)) (the Act), provides, in part, that the laws of the United States are extended to the subsoil and seabed of the outer continental shelf (shelf) and to all installations and other devices permanently or temporarily attached to the seabed which may be erected thereon for the purposes of exploring for, developing, or producing resources therefrom to the same extent as if the shelf were an area of exclusive Federal jurisdiction located within a state. The 1978 amendment to section 4(a) of the Act substituted "and all installations and other devices permanently or temporarily attached to the seabed" for "and fixed structures".

Treasury Decision 54281(1), publishing an abstract of a Customs decision dated December 11, 1956, stated, in part, that the coastwise laws are extended to mobile rigs during the period they are secured to or submerged onto the seabed of the shelf. Subsequent rulings applied the same principles to drilling platforms, artificial islands, and similar structures.

In ruling letter VES–3–15 RRUCDC 104880 JL, October 22, 1980 (circulated as Legal Determination 81–0100), Treasury Decision 54281(1) was expanded so that the Customs and navigation laws including the coastwise laws, apply to devices such as a buoy marker submerged onto or attached to the shelf for the purpose of resource, exploration operations, and to a well casing with attendant accessory systems, when submerged into the seabed of the shelf. The basis for expanding Treasury Decision 54281(1) was the 1978 amendment to section 4(a) of the Act.

In this case, a drilling rig would be towed from a point at which it had been attached to the seabed of the shelf for the purpose of exploring for resources. The towline would be connected to the drilling rig after all drilling equipment had been lifted from the seabed, but while the drilling rig was held in position by anchor. At this point in time, the drilling rig still would be a coastwise point. See ruling letters VES–3–17–R:CD:C 101523 R, June 19, 1975, and VES–3–15–R:CD:C 101466 R, July 29, 1975, in which a drilling rig which is at anchor on the shelf, whether preparatory to, at the conclusion of, or during activities related to the exploration or exploitation of the shelf, was held to be a "fixed structure" (under the Act before the 1978 amendment) for purposes of the Act while so anchored. However, the action prohibited by 46 U.S.C. 316(a) is that of towing a vessel from a place in the United States to another such place. The actual towing, or movement, of the drilling rig cannot begin until its anchors are lifted from the seabed. Thus, at the time the towing commenced, the drilling rig would not be a coastwise point from which it (the drilling rig) was towed.

We note, however, that "normally" a cap or plug is placed in the hole from which the drilling equipment has been withdrawn. If this capped or plugged hole were considered to be an installation or device permanently or temporarily attached to the seabed for the purpose of exploring for, developing, removing, or transporting resources from the shelf (see the October 22, 1980, ruling letter), the location from which the drilling rig was towed would be a coastwise point. Without more information describing the hole drilled and the process of capping or plugging the hole, we cannot determine whether the capped or plugged hole is such an installation or device and, therefore, a coastwise point.

If the location to which the drilling rig is towed were marked by a marker buoy, it would be considered a coastwide point under the October 22, 1980, ruling letter, as modified by ruling letter VES–3–15 CO:R:CD:C 104983/104880 JM, February 26, 1981. In the latter ruling we held that a point at which no buoy marker is submerged onto or attached to the shelf and no well has been sunk into the seabed is not a coastwise point even if there are buoys or wells in the general vicinity. However, if the destination drilling location were located by the use of satellite navigation equipment on the drilling rig and tugboat, and no device were submerged onto or attached to the seabed of the shelf at the destination location, that location would not be considered a coastwise point.

Accordingly, 46 U.S.C. 316(a) would not be violated in this case if:

1. The capped or plugged drilled hole were not considered to be a device or installation temporarily or permanently attached to the seabed for the purpose of exploring for, developing, removing, or transporting resources from the shelf; *or*

2. No device, such as a marker buoy or wellhead, were submerged onto or attached to the seabed of the shelf at the location to which the drilling rig is towed.

Section 316(a) would be violated if:

1. The capped or plugged hole were considered to be a device or installation temporarily or permanently attached to the seabed for the purpose of exploring for, developing, removing, or transporting resources from the shelf; *and*

2. A device, such as a marker buoy or wellhead, were submerged onto or attached to the seabed of the shelf at the location to which the drilling rig is towed.

The inquirer also requests a ruling as to whether the carriage on board the United States-flag drilling rig of crewmembers, equipment, and supplies of the drilling rig is prohibited by the coastwise laws. We assume that the drilling rig is not qualified to engage in the coastwise trade and, therefore, would be prohibited from transporting passengers and merchandise between United States coastwise point. We have

ruled that crewmembers of a drilling rig who are on board the rig in connection with its business are not considered "passengers". We also have ruled that equipment and stores of a drilling rig for its own use are not considered "merchandise" subject to the provisions of 46 U.S.C. 883. Accordingly, the carriage on the drilling rig of crewmembers of the drilling rig and of equipment and supplies, solely for use on the drilling rig, would not be in violation of the coastwise laws whether or not the points between which they were carried were coastwise points.

Holding:

1. When a United States-flag semi-submersible drilling rig is towed by a foreign-flag vessel—

   a. 46 U.S.C. 316(a) is *not* violated if the capped or plugged hole which the rig has drilled at the point from which the rig is towed is not considered a device or installation temporarily or permanently attached to the seabed for the purpose of exploring for, developing, removing, or transporting resources from the shelf; *or* no device is submerged onto or attached to the seabed of the shelf at the location to which the drilling rig is towed.

   b. 46 U.S.C. 316(a) *is* violated if the capped or plugged hole which the rig has drilled at the point from which the rig is towed is considered to be a device or installation temporarily or permanently attached to the seabed for the purpose of exploring for, developing, removing, or transporting resources from the shelf, *and* a device, such as a buoy marker, is submerged onto or attached to the seabed of the shelf at the location to which the drilling rig is towed.

2. Carriage on board a drilling rig not qualified to engage in the coastwise trade of its crewmembers and of equipment and supplies, solely for use on the drilling rig, is not in violation of the coastwise laws, whether or not the points between which they are carried are coastwise points, because they are not considered "passengers" or "merchandise".

Effect on other rulings: Ruling letters 101466, 101523, 104880 and 104983, followed.

(C.S.D. 81-215)

Subject: Drawback: Two or More Consumption Entries Covering the Same Merchandise MAY BE Designated as Bases for Drawback Upon Compliance With the Drawback Laws

Date: May 7, 1981
File: DRA-1-09-CO:R:CD:D
212720 DB

Issue: May more than one consumption entry covering the same articles be designated for drawback upon exportation of that article,

assuming compliance with the manufacturing drawback law and regulations?

Facts: An aircraft manufacturer holds an approved rate of drawback covering, among other aircraft parts, aircraft engines. Two aircraft engines were imported, built up, and then installed in an aircraft. Tests indicated that one of the engines tended to overheat. That engine was removed, exported without benefit of drawback for repairs, and was returned to the United States, duty on the repairs being collected on the value of those repairs pursuant to item 806.20, Tariff Schedules of the United States. After reinstallation in the aircraft and more tests, the aircraft was exported under its own power. The manufacturer requests drawback on the duty paid on the repairs as well as the duty paid on the first consumption entry.

Law and analysis: To be eligible to claim drawback under the manufacturing drawback law, the claimant must show importation, manufacture or production, and exportation. The installation of an engine into an aircraft is considered a manufacture.

Although the drawback regulations do not contemplate the filing of two drawback entries covering the identical shipment of exported articles, there is nothing in the regulations which precludes the designation of two consumption entries covering the identical merchandise in order to obtain a full drawback return on a single claim.

Legal Determination 3740-03 of December 21, 1977, allowed recovery of drawback on duty paid on merchandise which had previously been exported with drawback and was later imported as American goods returned, subject to duty not to exceed the drawback paid.

The file in this case indicates the aircraft engine in question was first imported, built up, and then installed. These operations constituted the manufacturing process necessary to obtain drawback. The removal of that engine from the aircraft to allow for exportation for repair did not negate the manufacturing already accomplished. We have previously held that articles assembled in this country and then exported in a knocked-down or partially disassembled condition to facilitate shipping were entitled to drawback, provided the records of the claimant proved manufacture (unpublished ruling of December 19, 1980 DRA-1-09 RRUCDB 211997).

Naturally, the manufacture necessary to claim drawback must occur after the importation. In the instant case, manufacturing did occur after both importations, since after the second importation, the engine was again installed in the aircraft. We see no legal impediment to the manufacturer's designation of both entries for drawback.

Holding: Two or more consumption entries, covering the same article or merchandise, may be designated as bases for drawback provided a manufacture or production occurs after each importation

and drawback has not previously been claimed on that merchandise or article under any of the entries. This ruling assumes compliance with all requirements of the law and applicable regulations.

(C.S.D. 81-216)

In-Bond Carriers and Cartmen: Application for Designation as a Carrier of Bonded Merchandise Pursuant to 19 U.S.C. 1551

Date: May 12, 1981
File: BON-1-CO:R:CD:D
212840 L

Issue: A firm has applied for designation as a carrier of bonded merchandise pursuant to 19 U.S.C. 1551. If so designated, the firm does not intend to itself transfer the bonded merchandise from one port to another in the United States but only to receive the merchandise for transportation with the use of facilities of other carriers. Several questions are raised:

1. May the firm be designated as a carrier of bonded merchandise?
2. If so, are the requirements of section 112.12(b)(4), Customs Regulations (19 CFR 112.12(b)(4), met by the statement "no routes"?
3. What is the nature of the "intent" to operate as a common carrier as used in section 112.12(b)(1), Customs Regulations (19 CFR 112.12(b)(1))?

Facts: A firm, currently authorized by a Certificate of Public Convenience and Necessity issued by the Interstate Commerce Commission to engage in transportation in interstate and foreign commerce as a common carrier by motor vehicle, has applied for authorization to carry bonded merchandise. The firm apparently does not intend to transport bonded merchandise in its own vehicles from one port to another in the United States, but to receive merchandise for transportation in bond which will be transported with the facilities of other bonded or nonbonded carriers.

The firm is licensed as a cartman and intends to continue to operate as a cartman in the Consolidated Port of Entry. It appears from the firms Certificate of Public Convenience and Necessity that its transportation under that certificate is limited to Customs ports within the Consolidated Port of Entry.

Law and Analysis: Carriers are designated as carriers of bonded merchandise pursuant to 19 U.S.C. 1551 and regulations prescribed by the Secretary of the Treasury. The regulations relating to carriers

of bonded merchandise are found in Parts 18 and 112, Customs Regulations (19 CFR 18 and 112).

As relevant here, 19 U.S.C. 1551 provides that:

> Any common carrier of merchandise owning or operating a . . . transportation line or route for the transportation of merchandise in the United States . . . upon application, may, in the discretion of the Secretary, be designated as a carrier of bonded merchandise for the final release of which from Customs custody a permit has not been issued.

Section 18.1(a)(1), Customs Regulations (19 CFR 18.1(a)(1)), provides that:

> Merchandise to be transported from one part to another in the United States in bond . . . shall be delivered to a common carrier . . . bonded for that purpose, but such merchandise delivered to a common carrier . . . may be transported with the use of facilities of other bonded or nonbonded carriers . . . .

Section 18.8(a), Customs Regulations (19 CFR 18.8(a)), provides in part that:

> The initial bonded carrier shall be responsible for shortage, irregular delivery, or nondelivery at destination or port of exit of bonded merchandise, received by it for carriage . . . .

Section 112.1(a) and (c), Customs Regulations (19 CFR 112.1(a) and (c)), defines "carrier" and "common carrier"; section 112.11, Customs Regulations (19 CFR 112.11), describes carriers which may be authorized to carry bonded merchandise; and section 112.12, Customs Regulations (19 CFR 112.12), sets out general and special requirements for authorization to carry bonded merchandise.

The general and special requirements relevant here are that the carrier file a bond on Customs Form 3587 in a sum specified by the district director accompanied by a fee of $50, a certified extract of its articles of incorporation or charter showing that it is authorized to engage in common carriage, and a statement that it is operating or intends to operate as a common carrier. In addition, motor carriers shall file a detailed description of the terminal facilities employed by the principal at the points of origin and destination on the routes covered, and a statement showing that facilities are available for the segregation and safeguarding of the packages designated by the district director for examination from a particular shipment.

If the amount of the bond is sufficient, all documents required have been furnished and are in proper form, and the fee prescribed has been paid, section 112.13, Customs Regulations (19 CFR 112.13), provides that the district director shall authorize the applicant to act as a carrier of bonded merchandise.

In the instant case it appears that the applicant is capable of complying with all of the requirements except that requiring a detailed description of the terminal facilities employed at the points of destination on the routes covered, since the carrier does not have terminal facilities or routes outside of the Consolidated Port of Entry.

It is clear that there would be no question as to the propriety of approving this carrier as a carrier of bonded merchandise were it not for the fact that it is located in a Consolidated Port of Entry and apparently has no routes that go beyond the Consolidated Port of Entry to another port in the United States. The carrier is authorized to engage in transportation as a common carrier between ports of entry in the Consolidated Port of Entry.

Subject to such regulations as the Secretary of the Treasury prescribes, 19 U.S.C. 1551 requires only that a common carrier own or operate a transportation line or route in the United States. Applicant does own or operate a transportation line or route in the United States. There is no requirement in the statute that the common carrier must transport merchandise delivered to it in bond over only those routes which it owns or operates. This is recognized in section 18.1(a)(1), Customs Regulations, which specifically provides that merchandise delivered to a common carrier may be transported with the use of facilities of other bonded or nonbonded carriers. We note also T.D. 47505(1) holding that air facilities may be used *for either all or any part of the carriage* of merchandise delivered to a bonded carrier for transportation in bond (emphasis added).; T.D. 47505(2) holding that merchandise delivered to a bonded carrier for transportation in bond may be transported with the use of facilities of a nonbonded carrier; and T.D. 40631 holding in part that if merchandise under any form of transportation entry is delivered to an initial bonded carrier and is subsequently turned over to a nonbonded carrier, the initial carrier would be liable under the terms of its carrier's bond for any shortage or irregularity.

We believe that the subject carrier, if otherwise in compliance with the law and regulations, may be designated as a carrier of bonded merchandise.

The second issue is if the subject carrier qualifies for designation as a carrier of bonded merchandise are the requirements of section 112.12(b)(4), Customs Regulations (19 CFR 112.12(b)(4)), met by the statement "no routes"?

Section 112.12(b)(4) requires a detailed description of the terminal facilities employed by the principal at the points of origin and destination on the routes covered and a statement that facilities are available for the segregation and safeguarding of packages designated

356-509 0 - 81 - 3

for examination. Since the applicant is operating as a motor carrier, we assume it has one or more terminals at which to receive merchandise delivered to it. A description of these terminal facilities at the point of origin and a statement that facilities are available for the segregation and safeguarding of examination packages should fulfill the requirement.

You also inquire as to the effect of the "intent" of a firm to engage in common carriage, as discussed in Headquarters Ruling BON-1-00: R:CD:D, 212389, dated January 6, 1981. It is suggested that if a firm presents a copy of its charter or articles of incorporation showing that it is authorized to engage in common carriage, and states that it intends to operate as a common carrier, it would qualify upon presentation of an adequate bond and the $50 application fee. Since, it is stated, there is no definition or limitation as to what constitutes "intent", any person could establish a corporate shell, state an intent to operate as a common carrier, and Customs would be compelled to approve the application upon receipt of a bond and the fee.

We do not agree. Corporations are created by the legislatures of each state with power to create corporations. The powers of all corporations are limited to those mentioned in their charters or in the general acts under which they are created. With these are those necessarily implied from what are expressly mentioned, both as to what they may do and the manner of doing it. Grants of corporate rights, privileges and franchises are always considered to be subject to police powers of the state, and the state may enact such laws as come within its police powers even though corporate rights seem to be interfered with. Where there is reasonable doubt about the meaning of a charter provision or the extent of the corporate powers, the doubt is resolved in favor of the public interest. In some cases, a corporation is authorized to do an act by its charter but may not lawfully do so until some document has been filed with a public official or administrative body, or until consent has been obtained. For example, an interstate railroad, which has the power by virtue of its certificate of incorporation to undertake an extension of its line, may not legally do so without obtaining a certificate of convenience and necessity from the Interstate Commerce Commission. The failure to obtain the certificate does not make the act *ultra vires;* it is an illegal act as it would be an illegal act by as individual.

More to the point, however, we believe that the requirement of section 112.12(b)(1) that a carrier "shall . . . file a statement that it . . . intends to operate as a common carrier" must be read in conjunction with the provision of 19 U.S.C. 1551(1) that "any common

carrier owning or operating . . . (a) transportation line or route . . . in the United States may . . . be designated as a carrier of bonded merchandise. . . . " A firm which has established its status as a common carrier, either by evidence that it is recognized as a common carrier by an appropriate governmental agency or by evidence that establishes that it is in fact a common carrier, may own but not currently operate a route or line. A statement that the firm intends to operate the line or route as a common carrier upon designation as a carrier of bonded merchandise, for example, would be sufficient to support the application. Since intent is a state of mind, it must be inferred from the facts and circumstances.

Accordingly, we perceive intent, as used in section 112.12(b)(1) and coupled with 19 U.S.C. 1551(1), to refer to the intent to engage in the authorized transportation of merchandise in the reasonably foreseeable future. The burden of establishing intent would be upon the applicant.

This interpretation is not relevant to the subject case since the applicant has established that it is recognized as a common carrier and that it does operate a line or route for the transportation of merchandise in the United States.

Holding

1. A firm, recognized as a common carrier, but not operating lines or routes outside of a Consolidated Port of Entry, may be designated as a carrier of bonded merchandise pursuant to 19 U.S.C. 1551(1) for the purpose of receiving merchandise to be transported with the use of facilities of other bonded or nonbonded carriers, if otherwise in compliance with the law and regulations. As provided by section 18.8, Customs Regulations (19 CFR 18. 8), that firm, as the initial bonded carrier, shall be responsible for shortage, irregular delivery, or nondelivery at destination or port of exit of bonded merchandise received by it for carriage.

2. Under the circumstances, the requirements of section 112.12(b)(4), Customs Regulations (19 CFR 112.12), may be met by the submission of a detailed description of the applicants terminal facilities at the points of origin, and a statement that facilities are available for the segregation and safeguarding of examination packages.

3. The intention to operate as a common carrier, referred to in section 112.12(b)(1), Customs Regulations (19 CFR 112.12(b)(1), refer to the intention of a common carrier described in 19 U.S.C. 1551 to operate a line or route it owns in the United States for the transportation of merchandise. The burden of establishing intent is upon the applicant and must be inferred from the particular facts and circumstances.

(C.S.D. 81-217)

Vessels: The Transfer of LASH Barges Carrying Merchandise From One Foreign-Flag Vessel to Another at A U.S. Port

Date: May 20, 1981
File: VES-3-07-CO:R:CD:C
105070 DR

This ruling concerns the transfer of LASH barges carrying merchandise from one foreign-flag vessel to another at a United States port.

Issue: Whether the transportation of LASH barges carrying merchandise by foreign-flag mother vessel from one U.S. port to a succeeding U.S. port for transfer there to another mother vessel for transportation to a foreign port is in violation of title 46, United States Code, section 883.

Facts: (a company) operates a LASH service which calls at U.S. Atlantic and Gulf ports and European ports in the United Kingdom and on the continent. Three foreign-flag mother vessels are involved in this service: the Liberian-flag (vessel) and (vessel) and the Netherlands-flag (vessel). The first two vessels call at New Orleans, and ports in the United Kingdom and on the continent. The third vessel calls at U.S. Atlantic ports, New Orleans, and ports on the continent.

Because the three mother vessels do not call at the same U.S. and foreign ports, (co.) states it is desirable on occasion that LASH barges carrying merchandise destined for a foreign port be transferred from the mother vessel on which they initially had been loaded in the United States to another mother vessel at a succeeding U.S. port for transportation to Europe. The barges would be placed in the water at the second U.S. port and moved by tug to a fleet anchorage while awaiting lading aboard the second mother vessel.

For example, a barge carrying merchandise destined for the United Kingdom would be laded aboard the (vessel) in Savannah because the (vessel) is the only mother vessel operated by (co.) to call at Savannah. However, the (vessel) doesn't call at ports in the United Kingdom. The barge, therefore, would be transported to New Orleans (the one U.S. port at which each mother vessel calls), where it would be unladed from the (vessel) and put on board one of the other two vessels for transportation to the United Kingdom. A transfer also may be made at New Orleans in the course of a reverse procedure on an inward movement.

Because each mother vessel involved is foreign-flag, local Customs officials have questioned whether the transshipment at New Orleans from one mother vessel to another of a LASH barge with merchandise transported from a U.S. Atlantic port, or conversely, the trans-

shipment at a U.S. Atlantic port of a LASH barge transported from New Orleans, is in violation of the coastwise laws.

Law and Analysis: Title 46, United States Code, section 883, provides in pertinent part, with exceptions not applicable here, that a foreign-flag or foreign-built vessel is prohibited from transporting merchandise between points embraced within the coastwise laws of the United States.

Vessel Operator's Argument

1. The proposed operation is part of a continuous movement of a foreign-flag vessel (the LASH barge) in foreign commerce, whether the barge is on board a mother vessel or afloat in the water. (co.) cites the cases of *Agrico Chemical Co.* v. *S.S. ATLANTIC FOREST*, 459 F. Supp. 638,651 (1980), and *Wirth Limited* v. *S/S ACADIA FOREST*, 537 F. 2d 1272, 1284, (1976). In these cases, a shipper brought an action against the carrier under the Carriage of Goods by Sea Act (COGSA) for damage to the cargo resulting from a collision between a LASH barge and a lock and between a LASH barge and other LASH barges, respectively. COGSA defines "ships" as "any vessel used for the carriage of goods by sea" (46 U.S.C. 1301(d)). In each case, it was held that a LASH barge is a "ship" under COGSA.

Pursuant to section 4.90 of the Customs Regulations, a foreign vessel including a LASH barge or a LASH barge mother vessel, may pick up or discharge cargo at various coastwise points, as long as the vessel and its cargo are engaged in a continuous movement in foreign commerce. The transfer of LASH barges between mother vessels is part of a continuous movement in foreign commerce and is not a violation of section 883 of title 46.

2. In enacting the 1971 amendment (seventh proviso) to section 883, which permits the transshipment of merchandise between foreign LASH barges in the United States, Congress intended to remove coastwise trading restrictions on either the LASH barge or its cargo in order to permit more efficient utilization of LASH barges in the United States.

3. The sixth proviso of section 883 authorizes the Secretary of the Treasury to prescribe regulations to permit, on the basis of reciprocity foreign-flag vessels to transport empty LASH barges between points in the United States embraced within the coastwise laws. The proviso reflects the Congressional intent that the through continuous movement of LASH barges in the foreign commerce should not be considered coastwise transportation under section 883.

Customs Position

1. LASH barges are considered to be vessels when in use as a means of transportation on water, or when in the water empty and capable

of being used as a means of transportation. Section 4.81(g), of the Customs Regulations (19 CFR 4.81(g)), provides for the movement of LASH barges in this country while being operated in the foreign trade of the United States to either offlade foreign cargo or to take on cargo for export. These procedures are allowed pursuant to the provisions of 19 U.S.C. 1443 and 1444, and 46 U.S.C. 313 and 314.

The vessel movements described above involve either an unlading at more than one point in the United States of merchandise which was laden by the vessel in a foreign country, or a lading of merchandise at more than one port in the United States which is to be unladen from the vessel in a foreign country. Neither of these procedures is considered a transportation of merchandise in coastwise trade. However, the Customs Service has held consistently that if merchandise, although in a through movement in foreign commerce, is laden at one United States coastwise point and unladen at another such point, the intervening transportation is coastwise trade. The case affirming this view is *In re Laidlaw et al.*, 42 Fed 401 (1890), the predecessor to The CNERIE, cited by you in footnote 1 of your letter of March 6.

The Customs Service considers that if a LASH bargo carrying merchandise is carried on board a foreign-flag mother vessel, the merchandise is transported in the mother vessel and would be carried in violation of section 883 of title 46 if laden at one U.S. port and unladen at another U.S. port.

2. In enacting the 1971 amendment (7th proviso) to section 883, the Congress recognized the Customs Service ruling that if cargo is transferred from one vessel to another (in this case the vessels were LASH-type barges), although the cargo is in an inbound or outbound continuous through movement in foreign commerce, the unlading at a U.S. port of merchandise which had been transshipped onto a foreign barge at another U.S. port would have been transported within the contemplation of section 883.

In the light of this Customs ruling, it was necessary to enact an exception to the general prohibition of the statute. However, the exception is granted on the basis of reciprocity and merchandise so transshipped between barges of countries which do not grant reciprocity, even though on through movements in foreign commerce, would still be considered to have been transported in violation of section 883. Merchandise transferred between vessels other than LASH-type barges and therefore not within the exception, would be in violation of the statute, regardless of the country of registry of the vessel.

3. The sixth proviso to section 883 provides, in pertinent part, that vessels not qualified to engage in the coastwise trade may transport *empty* LASH-type barges between coastwise points, provided that,

in the case of foreign vessels, the country of the barges' registry extends reciprocal privileges to U.S. vessels, that the barges are owned or leased by the transporting vessel's owner or operator and are transported for the owner or operator's use in handling cargo in the foreign trade. Thus, although LASH-barges are in a foreign movement, it was necessary to enact an exception to the general coastwise prohibition in order to enable them to be taken aboard an unqualified mother vessel at one domestic port and unladed at another such port. If the coastwise laws did not apply to LASH-type barges, even those moving in foreign commerce, the Congress would not have deemed it necessary to enact the proviso. Limiting the application of the seventh proviso to empty barges reinforces the Customs Service position that LASH barges containing merchandise laden at one U.S. port and offladen at another U.S. port are in violation of 46 U.S.C. 883.

Holding: The unlading of merchandise at a place embraced within the U.S. coastwise laws from a vessel not qualified to engage in the coastwise trade, which was laden on board that vessel at another place embraced within the U.S. coastwise laws, is prohibited by 46 U.S.C. 883, notwithstanding that (1) the merchandise is in a LASH-type barge and irrespective of the fact that (2) the coastwise transportation is a part of a through movement of the merchandise in the foreign commerce of the United States.

(C.S.D. 81-218)

Drawback: The Applicability of the "Use" Requirement of the Substitution Drawback Law to Members of an Incorporated Agricultural Cooperative Marketing Association

Date: May 20, 1981
File: DRA-1-CO:R:CD:D
212830 NK

Issue: Whether members of an incorporated Agricultural Cooperative Marketing Association may be considered as partners to satisfy the "use" requirement of the substitution drawback law.

Facts: Corporation X, incorporated as an Agricultural Cooperative Marketing Association under Chapter 618, of the Florida Statutes, consists of seven members each of which, in turn, is also incorporated as a separate legal entity under Chapter 618. All seven members own processing plants and process orange juice products with the use of concentrated orange juice for manufacturing. Corporation X under its articles of incorporation functions both as a supply cooperative as well as a marketing cooperative. Five of its members, Corporations A, B, C, D and E each has a similar Uniform Marketing Contract with

Corporation X appointing Corporation X as sole and exclusive agent for the distribution, selling, and marketing of frozen and unfrozen, concentrated and single strength citrus juices belonging to or controlled by the contracting members. The other two members, Corporations F and G, market their own products.

Member A imported or obtained imported duty-paid concentrated orange juice for manufacturing and used it to produce other orange juice products for domestic consumption. Member B obtained domestic concentrated orange juice for manufacturing of the same kind and quality as the imported concentrate and used it to produce other orange juice products for exportation. Corporation X filed drawback entries under section 1313(b), title 19, United States Code on the basis of a principal and agent relationship outlined in Treasury Decision 55207(1). Since it was not shown that Corporation X owned the imported and domestic substituted merchandise used to produce new products as one of the requirements under T.D. 55207(1), drawback was not allowed.

Corporation X contends that we should consider Corporation X as a single entity for five of its members, Corporations A, B C, D and E, in the nature of a partnership to satisfy the use requirement of the substitution drawback law. The theory of partnership is based upon the articles of incorporation and by-laws of Corporation X and the Uniform Marketing Contracts between Corporation X and its members, Corporations A, B, C, D, and E.

Law and analysis: T.D. 55207(1) concerns the principal and agent relationship to satisfy the use requirement of the substitution drawback law. It must be shown that the imported designated and the substituted domestic merchandise are owned by the principal and while an agency relationship may satisfy the use requirement it must also be shown that it is a bona fide relationship cognizable for other business purposes and not a mere sham to create a climate for drawback.

A partnership may be a drawback claimant. In some jurisdictions two corporations may form a partnership. While manufacturing performed by a partnership may be shown to satisfy the use requirement for drawback, such a partnership, like the principal and agent relationship, must be a bona fide partnership cognizable for other business purposes and not a mere sham to create a climate for drawback.

Chapter 618 of the Florida Statutes, in concert with Federal Statutes, permits an association of farmers, growers and producers of agricultural products to incorporate as an Agricultural Cooperative Marketing Association. These laws permit American farmers and growers to

incorporate and engage in cooperative activities such as growing, harvesting, producing, and marketing of their agricultural products with certain protection from the antitrust laws and obtain the advantages of corporate benefits and liabilities rather than those of a partnership.

An incorporated cooperative association is a complete legal entity, separate and apart from its members, in the same manner and to the same extent as any other ordinary corporation and cooperatives may usually sue and be sued as entities, by virtue of specific statutory authorization (See 18 Am Jur 2nd, Cooperative Associations 3.). It is doubtful, nor is it claimed under Florida law, that membership in an incorporated Agricultural Cooperative Marketing Association creates a partnership between some or all of its members.

The standard Uniform Marketing Contract between Corporation X and each member, is also cited to support a partnership. The covenants in the contract designate Corporation X as "the sole and exclusive agent of Member, said agency being coupled with an interest for the distribution, selling, and marketing" of certain products "belonging to or controlled by Member". Corporation X agrees to sell the product pooled with the products delivered by other members and non-member patrons of Corporation X and "to pay over ratably as the agreed price due Member" less authorized deductions.

It is noted that under the covenants, title to the product remains with the member who warrants good and lawful authority to sell and transfer the product at the time of delivery to Corporation X and to defend the title against all persons, claims, and liens. In the event the member fails to deliver the product, the covenants provide for settlement by the payment of liquidated damages on a percentage basis. Finally, any loss that may be suffered on account of inferior or damaged condition of the product at delivery, shall be charged against the member individually. Thus, the members do not share "ratably" in the loss incurred, if any, in the acquisition of imported designated or domestic substituted merchandise and their use in production of new articles for drawback. We are satisfied that the contract does not create a bona fide partnership to satisfy the use requirement of the substitution drawback law.

Holding: Mere membership in an incorporated Agricultural Cooperative Marketing Association does not create a partnership consisting of all or part of its members to satisfy the use requirement of the substitution drawback law. It must be shown that a bona fide partnership existed between the members rather than one in the nature of a partnership to satisfy the use requirement.

(C.S.D. 81-219)

Drawback: Rolls of Fabric Cut to Smaller Rolls is a Permitted Operation Under 19 U.S.C. 1313(j) Rolls Cut to Sized Pieces is Considered a Manufacturing Process Under 19 U.S.C. 1313(a)(b)

Date: May 20, 1981
File: DRA-1-CO:R:CD:D
212892 DB

Issues

1. Does the cutting of textiles imported in rolls into two or three smaller rolls, constitute a manufacture or production for purposes of the manufacturing drawback law? If not, are the smaller rolls eligible for same condition drawback if exported?

2. Does the cutting of smaller specific lengths from the imported rolls, and the subsequent packaging of the lengths with four wooden stretchers and assembly instructions to form a kit, constitute a manufacture or production for purposes of the manufacturing drawback laws? If not, are the smaller lengths eligible for same condition drawback if exported?

Facts: An importer/seller of textiles purchases and imports textiles in 30-meter rolls. After importation, these rolls are cut into two or three smaller rolls and sold. The smaller rolls are sold according to yards or "repeats," i.e. number of times a design on the roll is repeated. Because some of the rolls are sold to foreign buyers, the importer wants to know whether the cutting operation is a manufacture under 19 U.S.C. 1313(a) or whether the smaller rolls, when exported, will be eligible for same condition drawback, 19 U.S.C. 1313(j).

The importer further asks whether the cutting of specific short lengths of fabric to be packaged with four wooden stretchers and instructions to form a kit, is a manufacture/production or is a permitted operation under the same condition drawback law.

Law and analysis

1. We have consistently held that a sole process of cutting metals in coils into smaller lengths does not constitute a manufacture or production within the meaning of the manufacturing drawback law (see Bureau Letter 731.1 of December 7, 1956 T.D. 54272-0). On the other hand, the cutting of material or metal both lengthwise and widthwise to specifications *according to customer order to render the cut pieces suitable for a specific use* does constitute a manufacture. Thus the cutting of coiled electrolytic tin plate in coils to various sizes, dedicating those sizes to use in the manufacture of particular sized cans, was held to be a drawback manufacture (Bureau Letter of June 30, 1955 T.D. 53839-A).

In regard to textiles, we have held that the cutting of textiles into squares to use in the production of handkerchiefs was not a manufacture, and that the cutting of unfinished neckties from imported fabric likewise was not a manufacture.

It is clear, based on the foregoing precedents, that the cutting of a 30-meter textile roll into two or three smaller rolls, whether or not to customer order, does not dedicate the smaller rolls to any particular use, and is therefore not a manufacture or production for purposes of drawback.

2. The same condition drawback law, 19 U.S.C. 1313(j), requires that merchandise be exported (or destroyed under Customs supervision) in the same condition as imported. The merchandise cannot be subjected to a manufacture or production as contemplated by the manufacturing drawback law, but may be subjected to incidental operations. We must decide whether the cutting in this case is an "incidental operation" allowed under the law.

In previous ruling, while holding that such minor cutting operations were not manufactures or productions, we held that such operations could be performed in manipulation warehouses pursuant to 19 U.S.C. 1562. The legislative history for the same condition drawback law indicates one prime reason for its passage was to allow importers to avoid absorbing duty costs on merchandise to be exported without undergoing manufacture or production without the importers' having to resort to use of temporary importation bonds, bonded customs warehouses, or foreign trade zones (see Senate Rept. 999. 96th Cong. p.23 (1980)).

That is not to say the Congress intended that the law eliminate the need for manipulation warehouses, but that manipulations involving minor operations which do not change the basic character of merchandise can be conducted within the purview of the same condition drawback law. In this regard, the separation of one large roll of textile fabric into two or three smaller ones does not change the basic characteristics of the fabric itself. The cutting is akin to the removal for exportation of a certain number of gallons of petroleum or chemicals from a tank of that imported material. We are of the opinion the cutting involved in this case is a permitted operation under 19 U.S.C. 1313(j).

2. As indicated above, the cutting of material to a specific length to make it suitable for and dedicated to a specific use, constitutes a manufacture for drawback purposes. Previous rulings also indicate that articles which are assembled or placed with other articles to form a finished marketable product, the absence of any of the assembled articles rendering the product unsafe, unusable for intended use, or substantially incomplete, constitutes a manufacture of the individual

articles. Further, articles not necessary for the safe use of a finished product, but normally found with that product or expected to be found with that product, have been considered by the courts to have been subjected to manufacture when thay are placed with or assembled to the finished product. Thus, the mounting of imported tires and tubes on American wheels to be placed as spare tires in finished automobiles was considered a manufacture under 19 U.S.C. 1313(a) (*C. J. Holt & Co., Inc.* v. *United States*, 27 Cust. Ct. 88, C.D. 1352(1951)).

In this case, without the specifically cut-to-size fabric, we are left with four wooden stretchers and useless instructions. In short, that which the importer set out to produce, a textile kit, has not been produced absent the fabric. The cutting of the fabric to specific size and placing it with the other articles to form a kit together constitute a manufacture for purposes of the manufacturing drawback law.

Holding

1. The cutting of a 30-meter roll of textile fabric into two or three smaller rolls is a permitted operation under 19 U.S.C. 1313(j) and the smaller rolls upon exportation in conformance with the procedures and regulations are eligible for same condition drawback.

2. The cutting of the larger rolls into smaller specifically sized pieces of fabric, which are then packaged with wooden stretchers and instructions to form a kit, constitutes a manufacture of that fabric for purposes of the manufacturing drawback laws, 19 U.S.C. 1313 (a) and (b).

(C.S.D. 81–220)

Drawback: Accounting Procedures When Section 22.4 of the Customs Regulations Is Applied

Date: May 20, 1981
File: DRA–1–CO:R:CD:D
213007

Issue: If a drawback claimant under direct identification drawback (19 U.S.C. 1313(a)) has commingled fungible merchandise in its inventory which was placed therein prior to the establishment of its drawback program, how does it comply with the requirement that the manufactured articles be exported within 5 years after importation of the duty-paid merchandise?

Law and analysis: Section 22.4(f) reads in part as follows:

> When identification is made against two or more lots of imported merchandise of different dutiable values or subject to different rates of duty, or against two or more lots of drawback products subject to different allowances of drawback, the draw-

back shall be based first upon the lot or lots of the lowest dutiable value, rate of duty, or drawback allowance, as the case may be, then upon the lot or lots of the next higher dutiable value, rate of duty, or drawback allowance, and so on from lower to higher until all the lots have been accounted for.

This section provides a method of identification when fungible merchandise (commercially identical merchandise) is commingled. There is no requirement that the merchandise physically leave the inventory in accordance with the assumptions made under 22.4(f). In fact, if it is known how merchandise actually is removed from inventory, the merchandise would probably not be fungible and certainly it would be needless to make assumptions. The procedure required under 22.4(f) is best described with an example.

Between January 2, 1970 and January 2, 1981, claimant imported on January 2nd of each year 100 widgets with the values and rates of duty indicated below.

Date	Value per widget	Rate of duty (percent)	Number
January 2, 1970	$10	10	100
January 2, 1971	4	10	100
January 2, 1972	5	10	100
January 2, 1973	5	10	100
January 2, 1974	10	10	100
January 2, 1975	4	10	100
January 2, 1976	10	10	100
January 2, 1977	6	10	100
January 2, 1978	8	5	100
January 2, 1979	3	5	100
January 2, 1980	5	5	100
January 2, 1981	7	2	100

When claimant establishes its drawback program on September 1, 1980, it had 850 widgets in inventory. We assume that prior to this date all widgets were removed on a FIFO basis, there being no drawback program. Thus the 1970, the 1971, and half of the 1972 importation were no longer in the inventory when the drawback program started.

On December 1, 1980, another 150 widgets are removed for domestic sales. The FIFO principle applies and thus the remainder of the 1972 and the 1973 importations are removed from inventory. The next withdrawal of 100 widgets on February 1, 1981 is for drawback purposes and thus we select the entry which gives the lowest drawback.

Since the merchandise must be used within 5 years there is no drawback on the 1974 entry and consequently this entry is selected. When a withdrawal of 200 units is made on February 10, 1981, we select for the same reason the 1975 and 1976 entries.

On March 1, 1981, another 100 widgets are withdrawn for drawback purposes. The lowest drawback would now be the 1981 entry, and thus would be the next removed.

Holding: The principle enunciated in section 22.4(f) of the Customs Regulations applies to accounting records, not physical objects. Merchandise which was in commingled inventory 5 years or more prior to the establishment of a drawback program receives no drawback since articles made from it cannot be exported within 5 years of importation of the merchandise.

(C.S.D. 81-221)

Classification: Oil Well "Sucker Rods"

Date: May 27, 1981
File: CLA-2 CO:R:CV:G
065576 BB

This is in response to your letter of October 4, 1980, requesting the tariff classification of oil well "sucker rods." You state that these sucker rods are 25 feet long, made from AISI 4142 round alloy steel rod in diameters of 3/8, 7/8 and 1 inch. The ends of the sucker rods are hot forged and threaded so that they can be joined together with couplings.

A sucker rod is used in conection with pumping oil from an oil well. Individual sucker rods are coupled together to form a continuous rod thousands of feet long. Small rods, called pony rods, are attached to the upper end of the continuous rod to adjust its overall length to the depth of the well. One end of the continuous rod is connected to a pumping unit at the well surface and the other is connected to piston or plunger that has been lowered into the well.

Customs has an established practice of classifying sucker rods and pony rods under the provision for machinery parts not containing electrical features and not specially provided for in item 681.39, Tariff Schedules of the United States (TSUS). In T.D. 56120 (57) Customs explained this classification by saying that sucker rods were used to transmit power from one pump to another pump. In C.I.E. 616/64 Customs described a sucker rod as a shaft extension between an engine and a pump, but not designed to be used with any particular type of pump and engine.

As a result of several inquiries about this type of merchandise,

Customs has conducted a review of its practice on the classification of sucker and pony rods. The classification issue presented is whether such rods are more specifically provided for under the provision for pumps for liquids and parts thereof, other, in item 660.97, TSUS.

The American Petroleum Institute (API) indicates that sucker rods are designed for and solely used in sucker rod pumps. API's "Facts About Oil" states that a "sucker rod pump" is a surface pump connecting the power source by means of a rocker arm assembly to a rod extending into the well, which is attached to a valved plunger.

Heading 84.10 of the Brussels Nomenclature covers pumps for liquids. Under the subheading for parts of such pumps, rods specially designed to connect and drive the piston in pumps placed at some distance from the prime mover such as sucker rods, are specifically included.

Based on this information we have determined that the surface pumping unit, the pony and the sucker rods, and the down-well valved plunger constitute a single entity used for pumping oil. Because sucker rods are designed for and chiefly used with this pump and because they are essential to its operation, they are properly considered a "part" of the pump for tariff purposes.

Accordingly, sucker rods and pony rods are classifiable under the provision for pumps for liquids and parts thereof, other, in item 660.97, TSUS, dutiable, as products of Japan, at the column 1 rate of 451 percent ad valorem.

T.D. 56120 (57), C.I.E. 616/64, ORR 574/69, and HRL 066475 are hereby overruled. HRL 065582 wherein Customs classified the surface pumping unit or "pump jack" used with a sucker rod pump as a "pump for liquids" in item 660.97, is modified because that unit is properly considered a "part of a pump for liquids", classifiable under the same provision.

(C.S.D. 81-222)

Subject: Drawback: Containers Such as Boxes, Cans and Bottles Imported for Packaging of Merchandise Are Not Eligible for Same Condition Drawback Under 19 U.S.C. 1313(j)

Date: May 27 1981
File: DRA-1-09-CO:R:CD:D
213010 DB

Issue: Are containers such as cardboard boxes, bottles, and cans imported into the United States for filling with merchandise eligible for same condition drawback under 19 U.S.C. 1313(j) upon exportation?

Facts: Cardboard boxes, set up or in "knocked-down" condition, metal cans (and presumably lids for them), bottles, and other containers are to be imported from Canada for filling with merchandise such as processed foods and beverages, or produce. After packing, the containers are exported with the merchandise.

Law and analysis: Section 201(a) of Public Law 96–467, the enabling legislation for the same condition drawback law, 19 U.S.C. 1313(j), provides:

> (2)(j) SAME CONDITION DRAWBACK.—(1) If imported merchandise on which was paid any duty, tax, or fee imposed under Federal law because of its importation—
>
> (A) is, before the close of the three-year period beginning on the date of importation—
>
> (i) exported in the same condition as when imported, or
>
> (ii) destroyed under Customs supervision; and
>
> (B) *is not used* within the United States before such exportation or destruction: . . .

The legislative history for the legislation indicates a prime reason for its enactment is to allow importers to avoid absorbing duties on merchandise imported for other than manufacture or production without resorting to use of temporary importation bonds, Customs bonded warehouses, or foreign trade zones (Senate Rept. 999, 96th Cong., p. 23). However, the history points out that the new law also provides that in order to "be eligible for this drawback, the merchandise may not be used within the United States before such exportation . . ." (ibid). The drawback provision allows a refund of duties only "if the merchandise was *never used* in the United States". Incidental operations performed on the merchandise itself are allowed as "opposed to permitting the imported merchandise to be used while in the United States to, for example, test other materials (ibid., p. 24).

In Swalley v. *Addressograph Multigraph Corporation*, 158 F. 2d 51 (7th Cir. 1946 Cert. den. 1947), the Court stated that the words "use" and "to be used" are to be given their ordinary meaning:

> To employ . . . to put into operation, to cause to function . . . (to) employ for the use for which they were manufactured and intended (158F. 2d, at 54).

Likewise, in *Berry-Kofron Dental Labortory* v. *Smith*, 345 Mo. 922, 137 S.W. 2d 452 (S. Ct. Mo. 1940), the Court held that "use" means a ". . . continued possession and employment of a thing to the purpose for which it was adapted," and citing *Revzan* v. *Nudleman*, 307 Ill. 180, 18 N.E. 2d 219, that "use" should be taken at its "usual and popular meaning". (137 S.W. 2d, at 454–5).

In its primary meaning, "use" as a noun may signify the act of employing anything, the act of using or applying an object to one's

service. Further, the verb "to use" means to employ in some manner appropriate to the object to accomplish an end, which, without the use of the object, would not be accomplished. (*Turner* v. *Smith*, 269 Ky. 880, 108 S.W. 2d 1019, at 1020 (S. Ct. Ky. 1937).

The boxes, bottles, cans, etc. to be imported in this case are to be employed or used for their intended purpose, i.e. to act as containers for the transportation and ultimate sale of merchandise. Nothing *per se* is being done to these containers: they are being put to use in their primary function, which clearly excludes them for eligibility for drawback under 19 U.S.C. 1313(j). See also *McJimsey* v. *City of Des Moines, et al.*, 231 Iowa 693, 2 N.W. 2nd 65 (S. Ct. Iowa 1942), *Cypress Lawn Cemetery Ass'n* v. *City and Country of San Francisco*, 284 P. 506 (1930), and *Panhandle Gravel Co.* v. *Wilson*, 248 S.W. 2d 779 (1952).

Holding: Containers such as boxes, cans, and bottles, imported for packing of merchandise, are not eligible for same condition drawback.

(C.S.D. 81-223)

Subject: Customs Entry Bond: A Surety on a Customs Entry Bond Is Liable for Payment of Duty Determined To Be Due Under 19 U.S.C. 1592

Date: May 28, 1981
File: CO:R:CD:D
212957 WR

Issue: Whether a surety on a Customs bond is liable for payment of duty under section 592 of the Tariff Act of 1930, as amended (19 U.S.C. 1592), since that section requires restoration of any lawful duty lost as a result of a violation?

Facts: No facts were presented.

Law and analysis: Section 110(a) of the Customs Procedural Reform and Simplification Act of 1978, Act of October 4, 1978, Pub. L. 95-410, Sec. 110(a), Stat. 888, amended 19 U.S.C. 1592 by adding a new paragraph (d) which provided:

> "Notwithstanding section 514 of this Act, if the United States has been deprived of lawful duties as a result of a violation of subsection (a), the appropriate Customs officer shall require that such lawful duties be restored, whether or not a monetary penalty is assessed.

The Commissioner of Customs stated that he was not clear on what paragraph (d) was intended to accomplish. Hearings before the House Subcommittee on Trade on H.R. 8149 (95th Cong., 57 (July 19,

356-509 0 - 81 - 5

20, 21, and 22, 1977).) The Commissioner then stated the Customs Service interpreted the provision as allowing the Government to collect all duties (not previously collected) arising out of the discovery of a section 592 violation, limited only by the five-year statute of limitations, even though liquidation of the entries had become final under any other provision of law. Hearings *Supra*, 57. The Commissioner recommended that the word "shall" be used instead of the word "may" in the provision. Hearings *Supra*, 58. That recommendation appears to have been adopted. The House Report on the law states that the provision was intended to codify the existing administrative practice of mitigating claims for forfeiture value on condition that any loss of revenue is deposited with the United States. H. Rept. 621, 95th Cong., 16 (1977). The Senate Report repeats the House explanation. S. Rept. 778, 95th Cong. (1978).

Section 500 of the Tariff Act of 1930, as amended (19 U.S.C. 1500), provides the authority for the Customs Service to appraise and classify merchandise in an entry and to liquidate that entry. Section 504 of the Tariff Act of 1930, as amended (19 U.S.C. 1504), sets a time limit for liquidating an entry unless the period is extended by the Secretary.

Section 514, of the Tariff Act of 1930, as amended (19 U.S.C. 1514), sets a time limit for a liquidation to bind all parties. Under 19 U.S.C. 1592(b), the Customs Service is required to notify an alleged violator, among other things, of the estimated loss of revenue, which presupposes that the Customs Service first determines that loss.

It is not clear whether Congress intended that a Customs officer liquidate an entry under 19 U.S.C. 1500 in order to determine the loss of revenue attributable to a violation of 19 U.S.C. 1592(a) on the entry. If that was the intent, no steps were taken to stay the operation of 19 U.S.C. 1504, and there is no provision that corresponds to section 501, 520, or 521 of the Tariff Act of 1930, as amended (19 U.S.C. 1501, 1520, or 1521), which expressly authorizes the reliquidation of an entry. Instead, Congress merely stopped the binding effect of 19 U.S.C. 1514. Taken together, the most reasonable interpretation of 19 U.S.C. 1514 and 1592(d) is that despite expiration of the time period for challange of a liquidation, the Customs Service has authority to calculate a duty loss attributable to a violation under 19 U.S.C. 1592(a) on a liquidated entry and to demand payment of that duty loss. This interpretation has support from the fact that Congress intended 19 U.S.C. 1592(d) to codify an existing practice under which the Customs Service collected duties not previously paid that would have been collected but for the violation. Thus, the authority for calculating the duty loss attributable to a violation must be within 19 U.S.C. 1592.

Under 19 U.S.C. 1592(d) the Customs Service has authority to demand restoration of that lost duty. A surety is jointly liable with a bond principal for payment of any duty due when demanded. For example, with respect to consumption entries, condition (8) of the General Term Bond for the Entry of Merchandise (CF 7595) secures the payment, on demand, of all duties found legally due and unpaid on all consumption entries charged against the bond. Similar provisions exist on other bonds used to cover entry of merchandise. See CF 7751, condition (1); CF 7553, condition (1); and T.D. 80-173, condition (8). The principal and surety have agreed to pay the amount of duty legally due on an entry on demand without specifying the authority for determining the amount of duty due or the authority for making the demand for payment. To exercise its rights under the bond, the Customs Service must show only that the duty was legally due and make a lawful demand. Under 19 U.S.C. 1592(b) the Customs Service is authorized to calculate the amount of duty lost by a violation and to notify the violator of that calculation. Under 19 U.S.C. 1592(d) the Customs Service has authority to demand that lost duty. The Customs Service has authority to calculate the amount of duty due and to demand payment thereby making the surety liable for payment under the bond.

Holding: A surety on a Customs entry bond is liable for payment of duty determined to be due under 19 U.S.C. 1592.

(C.S.D. 81-224)

Temporary Importations Under Bond: The Dutiability of Valuable Wastes in Lieu of Exportation or Destruction

Date: June 3, 1981
File: CON-9-CO:R:CD:D
212725 L

Issue: Public Law 96-609 amended Headnote 2(b)(ii) of subpart C, Part 5, Schedule 8, Tariff Schedules of the United States (TSUS), to permit that, in lieu of the exportation or destruction of valuable wastes, duties may be tendered on such wastes at rates of duties in effect for such wastes at the time of importation. The following issues are raised:

1. What documentation is required to cancel the bond obligation for valuable waste products resulting from the processing of articles admitted temporarily free of duty under bond (TIB) which are not exported or destroyed and for which duties are not tendered since the valuable wastes are free of duty?
2. In such a situation, is an affidavit from the processor or a duty-free consumption entry adequate to satisfy the bond obligation?

3. Where both foreign articles admitted under TIB and domestic articles are processed in massive amounts, how can Customs control the possible combining of foreign and domestic valuable wastes?

4. If, prior to admission under TIB, the shipper and TIB importer agree that valuable wastes will be retained by the importer and form part of the consideration under the contract, would Headnote 1(a), Schedule 8, part 5C, TSUS, which prohibits importation for sale or sale on approval, or Headnote 2(b)(ii), Schedule 8, part 5C, TSUS, control?

Facts: Foreign steel ingots and plates are admitted under TIB for further processing under item 864.05, TSUS. The steel is processed into hot rolled steel coils in the United States with an estimated scrap factor of 6 to 16 percent in the rolling process. Steel scrap is currently free of duty. Duty would not be tendered, nor, it is stated, would a demand for liquidated damages be appropriate. It is suggested that an affidavit from the TIB importer or a duty-free consumption entry might be accepted as documentation of the amount of valuable waste not exported or destroyed in order to satisfy the bond obligation.

An associated problem arises from the fact that the rolling mill processes massive amounts of both imported and domestic steel. If valuable wastes resulting from the processing of foreign steel are combined with valuable wastes from the processing of domestic steel, the lack of physical or audit control creates a potentially serious accounting problem.

Finally, if prior to TIB entry the exporter and importer agree that retention of the valuable waste resulting from the processing forms a part of the consideration of the contract, a question arises over whether Headnote 2(b)(ii), Part 5, Schedule 8, TSUS, as amended takes precedence over Headnote 1(a) of the same part which prohibits importation for sale or sale on approval.

Law and analysis: Section 105 of Pub. L. 96–609 amended Headnote 2(b)(ii) of Part 5C, Schedule 8, TSUS, to read as follows:

> (ii) all articles and valuable wastes resulting from such processing will be exported or destroyed under Customs supervision within the bond period; except that in lieu of the exportation or destruction of valuable wastes, duties may be tendered on such wastes at rates of duties in effect for such wastes at the time of importation.

The legislative history on section 106 of H.R. 5047 (redesignated section 105 in the final bill) is found in House Report 96–1109 and Senate Report 96–999. In each case, the legislative history discusses the factors leading to enactment of the amendment of section 2(b)(ii), that is, the uneconomic destruction or exportation of valuable waste generated in the processing prior to exportation.

The Customs Service has the responsibility for enforcing compliance with the law on temporary importations under bond. Customs officers must examine the merchandise on importation to set the amount of the bond and to identify the imported merchandise so that a comparison can be made when the merchandise leaves the United States. Once entered, the merchandise is released to the importer. For this reason, the lack of physical or audit control over the merchandise, the major check against unlawful diversion into the commerce of the United States is the examination of the merchandise when it is exported at the end of the temporary importation period pursuant to sections 10.38 and 10.39, Customs Regulations (19 CFR 10.38, 10.39), or the submission of acceptable documentary evidence of exportation, as prescribed in Headquarters memorandum CON-9-CO:R:CD:D, April 3, 1981, to all Principal Customs Field Officers.

Amended section 2(b)(ii) provides that, in lieu of exportation or destruction, valuable wastes generated in processing may be retained in the United States upon tendering of duties applicable to such wastes at the time of importation. Sections 10.39 and 113.55 of the Customs Regulations (19 CFR 10.39 and 113.35), are the regulations relating to cancellation of bonds taken pursuant to Schedule 8, Part 5C,TSUS. Current regulations do not provide for the tender of duty on wastes resulting from manufacture, and section 10.39 (d)(1), Customs Regulations (19 CFR 10.39 (d)(1)), provides in part that if any article entered under Schedule 8, Part 5C, TSUS, has not been exported or destroyed in accordance with the regulations within the bond period, the district director shall make demand in writing under the bond for the payment of liquidated damages equal to the entire amount of the bond.

With respect to the first two issues, the intent of Congress is to allow tender of duty and retention in the United States of valuable waste where exportation or destruction is uneconomic. Any evidence, satisfactory to the district director, that is sufficient to identify the valuable waste and show its description and quantity is adequate. Such evidence might be a statement of the importer, or other person having knowledge of the facts, setting forth the circumstances of the production of the valuable waste. We understand that importers of merchandise under the Automotive Parts Trade Agreement enter and deposit duties on merchandise diverted and not used in the manufacture in the United States of motor vehicles. No significant problems have been encountered with this procedure and it is suggested that a similar procedure may be suitable for documenting valuable waste, whether dutiable or not, for the purpose of cancelling the temporary importa-

tion bond. Such a consumption entry, or other suitable evidence, must be submitted within the TIB period or any authorized extension of that period.

The third issue relates to the identification of valuable waste resulting from the processing of articles admitted under item 864.05, TSUS, when such waste may be commingled with domestic waste. Headnote 2(b) (1), Schedule 8, Part 5C, TSUS, requires that:

> if any processing of such merchandise results in an article . . . manufactured or produced in the United States—a complete accounting will be made to the Customs Service for all articles, wastes . . . resulting from such processing . . . .

To our knowledge, there are no regulations or instructions prescribing the specific form of the accounting to be made to the Customs Service. There is enclosed for your information a letter ruling dated January 2, 1959 (DB 516.5), indicating in part that the records kept by the processor must be sufficient to maintain the identity of the imported merchandise while in the processor's care and must show the description and quantities of all products, by-products, and wastes resulting from processing and the disposition thereof. Evidence of this nature, satisfactory to the district director, would be acceptable. Where massive amounts of waste may be generated and commingled with domestic waste, it would appear advisable that the processor confer with the district director with regard to the records to be kept. If the commingled foreign and domestic valuable waste is fungible, for example, a first-in, first-out system, in connection with suitable production records, might be appropriate for reconciling the merchandise admitted temporarily under bond with the merchandise exported and the valuable waste retained in the United States. See also section 161.1a(a), Customs Regulations (19 CFR 161.1a(a)), relating to the definition of records.

The final issue concerns Headnote 1(a) to Part 5C, Schedule 8, TSUS. This Headnote provides in part that articles may be admitted temporarily free of duty under bond when not imported for sale or sale on approval. In a situation where the shipper and TIB importer agree before importation that the valuable wastes be retained by the importer and form part of the consideration under the contract, the question is raised whether amended Headnote 2(b)(ii) takes precedence over the prohibition against sale or sale on approval in Headnote 1(a).

The Customs Service has previously taken the position that where the TIB importer had no intention at the time the temporary importation bond was filed of exporting the scrap and had in fact negotiated a contract price on the basis of the processor retaining the scrap which

had a market value, sale of the waste violated the prohibition against sale or sale on approval and the bond was breached in its entirety.

In view of the fact that Congress, in amending Headnote 2(b)(ii), has explicitly provided for the tender of duties and retention of valuable waste in the United States, we believe that a case such as that presented must be interpreted as an exception to the general prohibition against sale or sale on approval in Headnote 1(a).

Holding: 1 and 2. Where valuable wastes resulting from the processing of articles admitted temporarily free of duty under bond under item 864.05, TSUS, are not exported or destroyed within the bonded period, and on which duties have not been tendered in accordance with Headnote 2(b)(ii), Part 5C, schedule 8, TSUS, since such wastes were free of duty at time of importation, the temporary importation bond may be cancelled upon production of any evidence satisfactory to the district director which establishes the identity, description, and quantity of the valuable waste retained in the United States. This procedure would be equally applicable to valuable wastes upon which duties are tendered at the rates in effect for such wastes at the time of importation. It is suggested that a consumption entry, dutiable or not dutiable, as appropriate, would be a suitable vehicle for documenting the cancellation of the bond liability. Cancellation of the bond liability assumes, of course, compliance with the regulations with respect to the articles processed and exported as well as identification of the valuable wastes retained in the United States.

3. If valuable wastes resulting from articles admitted under item 864.05, TSUS, are commingled with domestic valuable waste, Headnote 2(b)(1), Part 5C, Schedule 8, TSUS, requires in part that a complete accounting for all wastes be made to the Customs Service. The records of the processor must be sufficient to maintain the identity of the imported merchandise while in the processor's care and must show the description and quantities of waste resulting from processing and its disposition. Production records kept in the normal course of business, if satisfactory to the district director, may be sufficient to identify the imported merchandise and show the description, quantity, and disposition of valuable wastes resulting from processing. However, since processing may take many forms and result in various valuable wastes, it is not possible to specify the precise form of records to be kept. It would be advisable that the TIB importer discuss with the district director the proposed record-keeping procedure prior to importation of articles under item 864.05, TSUS, for processing.

4. The retention of valuable waste in the United States by the TIB importer when the value of the valuable waste formed part of the consideration under the contract prior to temporary admission under

bond under item 864.05, TSUS, is an exception to the prohibition against sale or sale on approval in Headnote 1(a), Part 5C, Schedule 8, TSUS. Any other result would be contrary to the clear intent of Congress in enacting the amendment to Headnote 2(b)(ii) to permit the retention in the United States of valuable wastes resulting from processing of articles under item 864.05, TSUS.

(C.S.D. 81-225)

Drawback: The Applicability of 19 U.S.C. 1313(j) to Light Trucks Imported Into Puerto Rico From the U.S. Virgin Islands and Thereafter Returned to Those Islands

Date: June 4, 1981
File: DRA-1-09-CO:R:CD:D
213073 DB

Issue: Are articles imported from the U.S. Virgin Islands and later shipped to these islands in the same condition as imported eligible for drawback under the same condition drawback law, 19 U.S.C. 1313(j)?

Facts: An automobile dealer in the U.S. Virgin Islands shipped some light trucks to Puerto Rico where they were entered duty-free. The dealer now has the opportunity to sell these trucks in the U.S. Virgin Islands at a financially practical price provided the duty paid upon entry into the Customs territory of the United States can be recovered. He asks whether upon return to the U.S. Virgin Islands the trucks will be eligible for same condition drawback.

Law and analysis: For purposes of this ruling, we assume the trucks were entered or withdrawn from warehouse for consumption in this country on or after December 28, 1980, the effective date of 19 U.S.C. 1313(j).

Both the courts and the Customs Service have defined exportation as a "severance of goods from the mass of things belonging to this country with the intention of uniting them to the mass of things belonging to *some foreign country*" (Emphasis added). This definition was quoted with approval by the Supreme Court in *Swan and Finch Company* v. *United States*, 19 U.S. 143 (1903), and has been attributed to an opinion of the Solicitor General approved by the Attorney General in 1883, 17 Op. Atty. Gen. 579.

The U.S. Virgin Islands are an insular possession of the United States, and even though their officials administer their own tariff laws, they remain American territory and not a foreign country. For this reason, we and the courts have historically held that normally

shipments to the Virgin Islands are not considered exportation for purposes of goods manufactured in the United States under drawback conditions (See Legal Determination 3470–16 of May 12, 1978).

However, these cases and rulings dealt with merchandise imported from foreign countries for manufacture in the United States for shipment to the Virgin Islands. In a ruling of December 31, 1962, disseminated as T.D. 55819(11), we stated that merchandise shipped from the Virgin Islands to the United States and entered under temporary importation bond could be returned to the Virgin Islands for purposes of canceling the liability under the bond. We further held that merchandise entered under bond from a foreign country could not be shipped to the Virgin Islands to avoid the bond's liability.

Following T.D. 55819(11) in T.D. 66–255(1) of October 21, 1966, we held that merchandise imported from the U.S. Virgin Islands and found not to conform to sample or specification was subject to drawback under 19 U.S.C. 1313(c) if returned to Customs custody for return to those islands. Our opinion was based on General Headnote 3(a), Tariff Schedules of the United States, which in relevant part provides:

> (i) Articles imported from insular possessions of the United States which are outside the Customs territory of the United States are subject to the rates of duty set forth in column numbered one of the schedules, . . .

From the foregoing language, although insular possessions are American territory, they are considered as being outside the Customs territory and accordingly merchandise imported from them is treated as if imported from a foreign country. Therefore, if merchandise shipped to the United States from an insular possession is an importation, that same merchandise returned to that possession should constitute an exportation.

If merchandise imported from the Virgin Islands is considered exported when returned to those islands under 19 U.S.C. 1313(c), we can see no cogent reason to treat such merchandise differently under 19 U.S.C. 1313(j), the same condition drawback law.

Holding: Merchandise or articles imported duty-paid from the U.S. Virgin Islands are eligible for return of those duties under the same condition drawback law upon return to those islands, assuming compliance with the law and applicable regulations. Goods imported from foreign countries and shipped to insular possessions are not considered exported for purposes of the same condition drawback law.

(C.S.D. 81-226)

Classification: Sardines Packed in Tomato Sauce, Sherry Wine, and Oil

Date: June 16, 1981
File: CLA-2 CO:R:CV:G
068474 JH

To: District Director of Customs, Milwaukee, Wisconsin 53202.
From: Director, Classification and Value Division.
Subject: Internal Advice 58/81-Classification of Sardines Packed in Tomato Sauce, Sherry Wine, and Oil.

Facts: Entry was submitted for 3,000 3.5-ounce tins of "Danish Bristling Sardines in Tomato and Sherry." A sample tin was described by a Customs laboratory report as consisting of sardines, not skinned, smoked, or boned, in sherry wine, tomato sauce and added safflower oil. The label on the tins indicated that they consisted of sardines, tomato sauce, sherry wine and olive oil. As a result, classification was changed from fish, prepared in any manner, not in oil, in item 112.20, Tariff Schedules of the United States (TSUS), dutiable at 4.7 percent ad valorem, to fish, prepared or preserved in any manner, in oil, in item 112.82, TSUS, dutiable at 15 percent ad valorem.

Issue: Whether the addition of oil to fish which has been prepared with tomato sauce and wine constitutes fish prepared or preserved in any manner in oil, in air tight containers.

Law and analysis: Headnote 3, Part 3, Schedule 1, TSUS, states that the term "in oil" means packed in oil or fat and/or oil and fat and other substances, whether such oil or fat was introduced at the time of packing or prior thereto. The provision in question is "fish prepared or preserved in any manner, in oil, in air tight containers." The term "prepared" has been considered many times by the Customs court and is generally considered to refer to edible substances which are not in the fresh or orginal condition but have been processed in some manner. Therefore, sardines which have been processed with tomato sauce and sherry wine are prepared within the meaning of that item description.

In *Strohmeyer Arpe Company* v. *United States*, 5 Court of Customs Appeals 527(1915), the tariff status of fish in tomato sauce which contained 5 percent oil was considered. The court commented that the classification as fish packed in oil was correct as the purpose of the statute was to provide for greater duty in the case of oil alone or oil with other substances used in the preparation of the fish in packing. There is no indication that the amount of oil would be a determinative. It is understood that it is common in the industry to describe a fish packed in a sauce, such as tomato sauce, as being packed in that

particular sauce alone and not mention the presence of oil, even though the oil may be added in the packing. Customs has been aware of this practice for many years and has considered such a product as containing added oil whether or not it was stated, and classified it under the provision for the particular fish prepared or preserved, in oil.

Holding: Sardines packed in tomato sauce, sherry wine, and added oil are classifiable under the provision for sardines prepared or preserved in any manner, in oil, in air tight containers, in item 112.82, TSUS.

(C.S.D. 81–227)

Subject: Classification: Laser Drag Scrapers and Trenchless Drainage Plows, if Actually Used in the Preparation of Farmland, Are Classifiable Under Item 870.40, TSUS

Date: June 18, 1981
File: CLA–2 CO:R:CV:G
068253 JLV

Re Decision on Request for Internal Advice No. 221/80.

DISTRICT DIRECTOR OF CUSTOMS,
Detroit, Michigan.

DEAR SIR: In your memorandum of October 29, 1980, you request the tariff classification of certain laser drag scrapers and trenchless drainage plows produced in Canada by (NAME). This request for advice was received at Headquarters on March 5, 1981.

Facts: The merchandise consists of laser drag scrapers and trenchless drainage plows with laser planes. The laser drag scrapers are designed to cut and fill land areas in order to level the land. The scrapers are available in sizes ranging from widths of 10 to 18 feet and corresponding capacities of 5 to 9 cubic yards. The scrapers can be pulled by farm tractors with either two wheel or four wheel drive. Each scraper connects to a tractor by means of a tow bar and is supported by 2, 4, or 6 trailing wheels.

The trenchless drainage plows are available in several models for different farm tractor power systems. These plows are designed to break the soil and to lay drainage pipe or tile at various depths in a single operation.

Both machines are said to be used by farmers in preparing land for farming operations in addition to being used by drainage contractors and other general contractors.

Issue: Are the machines classifiable in item 870.40, Tariff Schedules of the United States (TSUS), or in item 870.45, TSUS?

Law and analysis: The importer does not claim that the scrapers and trenchless drainage plows are classifiable as agriculture implements in item 666.00, TSUS. Neither is there any evidence of chief use by farmers in the agricultural pursuit of preparing soil for farming purposes.

The scrapers and trenchless drainage plows appear to be of a type classifiable under the provision for other excavating, leveling, boring, and extracting machinery in item 664.08, TSUS. At issue, however, is whether they are classifiable under the provision for machinery, equipment, and implements to be used for agricultural or horicultural purposes in item 870.40, TSUS, or under the provision for certain parts of articles provided for in item 666.00, TSUS, in item 870.45, TSUS.

Item 870.45, TSUS, applies only to parts of articles provided for in item 666.00, TSUS. The machines at issue are complete machines, not parts, and are therefore precluded from classification in item 870.45.

Item 870.40, TSUS, is an actual use provision. The legislative history for that item states that it will permit the duty-free entry of articles described in item 666.00 which are not classifiable thereunder because their chief use is not in agriculture or horticulture.

Therefore, assuming that the use of these machines by a farmer in preparing farmland is an agricultural pursuit, the scrapers or trenchless drainage plows would be eligible for tariff treatment under item 870.40, TSUS, upon compliance with the requirements set forth in Customs Regulations 10.131 to 10.139 (19 CFR 10.131–10.139). There is a question, however, that such soil preparation is not an agricultural pursuit. If not, then the machines in question would not be of the class or kind of machine contemplated in item 666.00, TSUS, and would accordingly not be classifiable under that provision or under item 870.40, TSUS. In Headquarters letter of November 21, 1978, the laying of drainage tile by a trenching machine was characterized as a plumber's pursuit, not a farmer's pursuit. In view of that, it was held that a trencher would not be classifiable in item 666.00, even if chiefly used on agricultural lands. Similarly, judicial opinion in *Arthur J. Humphreys* v. *United States*, 66 Cust. Ct. 24, 28, C.D. 4163 (1971) indicated that under the principle of *noscitur a sociis* the use of a clearing blade was not encompassed by the provision for machinery for soil preparation. See also I/A 71–75 (Headquarters Letter of May 23, 1975, file 040129).

Notwithstanding the above statements, the use of either a scraper or a trencher by a farmer in making farmland more suitable for raising crops or other farming purposes appears to be soil preparation within the scope of agricultural pursuits. It is sufficiently related to

the production of food or raiment for man. By improving drainage a farmer is able to plow or plant earlier or make certain untillable land suitable for farming. By leveling land and filling holes a farmer is able to make farmland easier to work and more adaptable to farm machinery. Therefore, it is our opinion that a scraper and trench less drainage plow should be considered of a class or kind of machinery within item 666.00, TSUS. Absent a showing of chief use in agricultural pursuits, they would still be eligible for classification under item 870.40, TSUS, upon submission of satisfactory evidence that they are actually used by a farmer in the preparation of farmland for agricultural purposes.

One final question is raised concerning part-time use of such machinery for purposes other than working farmland. If a farmer were also a land contractor and the machinery were to be used for both his agricultural needs and his contract land business, the machinery would not be actually used in agricultural pursuits for tariff purposes. On the other hand, incidental use by a farmer for purposes other than the primary use in farming operations would not normally bar 870.40 treatment. Each case, however, should be examined by the district director having jurisdiction over the merchandise in question.

Holding: The scrapers and trenchless drainge plows are classifiable under items 870.40, TSUS, if they are actually used by a farmer in preparing farmland and if the actual use requirements of sections 10.131–10.139 of the Customs Regulations are satisfied.

This ruling does not hold that such machinery is chiefly used by farmers nor does it apply to such machinery that is imported and used by land developers or contractors who also perform these services for farmers.

(C.S.D. 81–228)

Classification: Certain Technical Publications Imported With Jet Aircraft

Date: June 25, 1981
File: CLA–2 CO:R:CV:G
065475 BB

AREA DIRECTOR OF CUSTOMS,
Newark Area, Airport International Plaza, Newark, New Jersey.

DEAR SIR: This is in response to Request for Internal Advice No. 174/80 submitted on behalf of (company name) which concerns the classification of certain technical publications imported with jet aircraft (CLA-1-01N:C:D:LD).

The subject technical publications include the following: two sets

of operating manuals, two sets of maintenance manuals, two sets of wiring diagrams, two sets of tool and equipment lists, one illustrated repair manual, one structural repair manual, one set of overhaul manuals, two sets of flight manuals, two sets of service bulletins, two sets of guide books, one set of news flashes, and one set of service news letters.

These technical publications are carried aboard a new (co.) jet aircraft when that aircraft is imported into the United States. The publications are separately invoiced, and have an invoiced value of approximately $3,300. After importation these technical publications are removed from the aircraft. They provide the purchaser with detailed, updated information on the proper operation and maintenance of a (co.) jet aircraft, as well as information on how to order replacement parts.

The issue presented is the proper treatment of these technical publications under the Tariff Schedules of the United States (TSUS).

Customs has issued several rulings indicating that what is generally referred to as "use and care" information, which is packaged along with the merchandise it describes, is not subject to separate appraisement, but rather, its value is added to that of the merchandise. These rulings have almost invariably involved single page printed instruction and assembly sheets or small brochures, of virtually insignificant value.

The rationale for this treatment of use and care information was that these sheets and brochures were properly considered "packing," the value of which was incidental to the entire enclosure. *See*, for example, CIE 31/62. Under either section 402 or 402a of the Tariff Act of 1930, as amended, the dutiable value of merchandise includes the cost of all containers and coverings of whatever nature, and all other costs, charges and expenses incident to placing the merchandise in condition, packed, ready for shipment to the United States. The assembly sheets and brochures were believed to fall under the "all other costs, charges and expenses" language of this valuation statute.

After the adoption of the Tariff Schedules of the United States, several Customs rulings stated that these instruction sheets were not separately classifiable because they were considered packing "within the purview of General Headnote 6(b)(i), TSUS." *See*, for example, Headquarters Ruling Letter (HRL) 051304, dated May 2, 1977.

General Headnote 6(b)(i) states that usual or ordinary types of shipping or transportation containers or holders, if not designed for, or capable of, reuse, and containers of usual types ordinarily sold at retail with their contents, are not subject to treatment as imported articles but, in effect, are dutiable at the same rate as their contents.

This Headnote contemplates coverage of items that are non-reusable

and which will be discarded when the merchandise is unpacked. While single page assembly instructions or small informational brochures might fall within the intended scope of the Headnote's language, the voluminous manuals which are the subject of this case obviously, are intended to be retained after the merchandise is unpacked, and will be reused on a regular basis. Such articles do not fall within the purview of General Headnote 6(b)(i).

In HRL 051190 dated July 17, 1978, (legal determination 79–0056), Customs was asked to classify several volumes of technical information imported with flight simulators. It was recognized that neither the "packing costs" under section 402a, nor the "within the purview of Headnote 6(b)(i)" rationales for the classification of use and care information were applicable to merchandise with a significant value and which obviously was intended to be reused.

Customs decided to base the classification of this merchandise on a theory of "entireties." HRL 051190 held that if the technical manuals were imported with a flight simulator, if they were geared to be used with the flight simulator, if they were necessary for the proper operation of the flight simulator, and if they had no commercial value apart from the simulator, then the manuals constituted an entirety for tariff purposes and were dutiable under the same provision as the simulator.

The doctrine of entireties is based in part on commercial realities associated with imported merchandise and in part on administrative convenience. In general, the doctrine states that an imported article will be regarded as an entirety when the components, on being joined, form a new article which has a character or use different from that of any of the parts, or when one of the components or elements is predominant, the other parts being merely incidental to the predominant part *E. M. Stevens Corp.* v. *United States*, 44 Cust. Ct. 203, Abstract 66971 (1962). However, when the article is imported as a unit, but the components retain their individual identities and are not subordinated to the identity of the combination, duty will be imposed on the components as if they had been imported separately. *Donalds Ltd., Inc.* v. *United States*, 32 Cust. Ct. 310, C.D. 1619 (1954).

There are no universal, iron clad rules for applying this doctrine. The courts have pointed to various criteria for determining the existence of an entirety such as physical joinder, functional interplay, merchandising, design, intent, or commercial unit. The problem is that opposite conclusions about the existence of an entirety can be reached, depending upon which of these criteria are considered "controlling" in a particular situation. *Ikora, Inc.* v. *United States*, C.D. 4202 (1971).

In HRL 051190, the fact that the technical manuals were necessary for the operation of the flight simulators was considered controlling.

This led to the conclusion that the flight simulators and manuals were an entirety. We do not believe this conclusion is justified in the subject situation for the following reasons:

First, technical manuals are never physically joined with the merchandise they describe. In fact, these technical manuals are removed from the aircraft after arrival.

Secondly, the presence of a technical manual on how to operate and maintain a piece of equipment does not create a new article of commerce having a name, character or use different from that of the piece of equipment and the manual standing alone.

Third, although technical manuals are not as valuable as the equipment they describe, they are neither incidental to that equipment nor do they merge with that equipment. This is especially true in the subject case. These manuals provide information about the aircraft, but they are still manuals and the aircraft is still an aircraft. The manuals are separately invoiced and they have a substantial value in themselves.

Fourth, there is no evidence that these technical manuals cannot be sold separately, for example in a secondary market for (co.) aircraft. Shop manuals for particular types of automobiles are sold separately and classified as books. *See* TC 484.2, dated December 8, 1967. Therefore, the manuals and the aircraft do not invariably form a commercial unit.

Fifth, the doctrine of entireties can never be used to circumvent the intent of Congress. *Miniature Fashions, Inc.* v. *United States*, 54 CCPA 11, 16, C.A.D. 894 (1966). Congress has clearly created separate provisions in the tariff schedules for aircraft and for books. The United States is bound by Article I of the Agreement on the Importation of Educational, Scientific and Cultural Material (Florence Agreement) to provide duty-free entry for this type of printed material. Congress has implemented the provisions of this Agreement in the tariff schedules. *See* Pub. L. 89–651, 80 stat. 897, and 1966 USCCAN 3254 *et seq.* for the legislative history behind the adoption of the duty-free provisions for this type of printed matter.

Sixth, a rationale of administrative convenience in combining two entities is not persuasive in this case where both entities have substantial value and where the importer has isolated respective costs and separately invoiced the items.

Accordingly, we conclude that the doctrine of entireties is not applicable to technical manuals.

As we have seen, none of the previous rationals for classifying use and care information along with the merchandise it describes is applicable to these technical manuals. We conclude, therefore, that these manuals should be separately classified.

As to whether an "established and uniform practice" exists to classify use and care information along with the merchandise it

describes, 19 U.S.C. 1315(d) provides that an administrative ruling resulting in the imposition of a higher rate of duty than the Secretary shall find to have been applicable to imported merchandise under an established and uniform practice shall be effective 30 days after the publication of such ruling in the Federal Register. However, publication is only required where the Secretary has made a "finding" that such a practice of classification exists. *Ditbro Pearl Company, Inc.* v. *United States*, 515 F. 2d 1157 (1975). Part 177.10(b), Customs Regulations, (19 CFR 177.10(b)), provides that a ruling regarding a rate of duty or charge which is published in the Customs Bulletin will establish a uniform practice, *i.e.*, publication will constitute a "finding" of such a practice by the Secretary of the Treasury.

None of the rulings concerning classification of use and care information were rulings "regarding a rate of duty or charge." Instead, they were rulings applying legal doctrines to particular factual situations. Each of these use and care rulings dealt with different types of merchandise and resulted in the application of different rates of duty. The concept of an "established and uniform practice" is only useful when describing a particular rate of duty applied consistently to a particular type of merchandise. Therefore, the concept of an established practice has no relevance to the type of question presented in this case. Accordingly, Customs is not bound by any practice of considering use and care information to be an entirety with the merchandise it describes.

We have already found that these technical manuals do not form an entirety with the aircraft they describe and that they should be classified separately. All unliquidated entries for these aircraft manuals should be liquidated in accordance with this ruling. Because the rationale expressed therein no longer reflects the current views of the Customs Service, pursuant to section 177.9, Customs Regulations (19 CFR 177.9), HRL 051190 is hereby revoked.

(C.S.D. 81–229)

Subject: Vessels: Application of Vessel Repair Regulations and Entry Requirements Prescribed in Section 4.7 and 4.14, Customs Regulations as Amended by T.D. 80–237

Date: July 14, 1981
File: VES–13–02–CO:R:CD:C
105193 PH

To: Regional Commissioner, New Orleans, Louisiana.
From: Chief, Carrier Rulings Branch.
Subject: Vessel Repair Entry Requirements (19 CFR 4.14).

With your memorandum of June 3, 1981 (VES–13–18–V:O:CV:L ML), you forwarded a letter dated May 11, 1981, from (Company

356-509 0 - 81 - 4

Name) requesting a waiver from the requirement in section 4.14, Customs Regulations, for an "*immediate* full declaration" and a certification that all past declarations have been made.

The requirements to which (Company Name) refers are provided for in sections 4.7 and 4.14, Customs Regulations, which were amended by T.D. 80–237, published in the Federal Register September 30, 1980 (45 FR 64560). As amended, section 4.7(d)(1) requires the master or owner of a vessel subject to vessel repair duties at the port of first arrival from a foreign country to declare on Customs Form 226 any equipment, repair parts, or materials purchased for the vessel, or any expense for repairs incurred outside the United States, within the purview of 19 U.S.C. 1466. The same requirement is contained in section 4.14(b)(1), Customs Regulations. Section 4.14(b)(2), Customs Regulations, provides that an entry for all equipment, parts, or materials purchased for, and all repairs made outside the United States to, any vessel subject to the provisions of section 4.14, Customs Regulations, shall be filed with the appropriate Customs officer at the port of first arrival within 5 working days after arrival. The party filing the entry is required to mark it to indicate whether it is a full and complete account or an incomplete account. If the former, the entry papers must include evidence showing the cost of each item listed on the entry (section 4.14(b)(2)(ii), Customs Regulations). If the repair entry is submitted as an incomplete account, the evidence must be submitted within 60 days from the date of the vessel's arrival (section 4.14(b)(2)(ii), Customs Regulations). Provision is made in section 4.14(b)(2)(ii) for a 30 day extension of this time limit which may be allowed by the field vessel repair liquidation unit and a further extension which may be allowed by the Carrier Rulings Branch Headquarters.

The letter from (Co. Name) also concerns the requirement in section 4.14(d)(1)(i), Customs Regulations, that an application for relief certify that all foreign equipment, parts, or materials purchased for, and all foreign repairs made to, the vessel within one year immediately preceding the application have been declared as required by section 4.14, Customs Regulations.

These requirements, one of which was contained in the Regulations before the amendment of the vessel repair regulations effected by T.D. 80–237 (that vessel repairs, etc., be declared at the port of first arrival), were fully considered in the process of amending the vessel repair Regulations. The comments received on the two requirements added to the Regulations by T.D. 80–237 (the time limit for submitting cost evidence and the certification required in an application for relief) were discussed in T.D. 80–237, and it was determined to include them in the vessel repair Regulations as they now read (45 FR 64562, 64563–64564). As originally proposed (43 FR 14060, April 4,

1978), certification would have been required as to all foreign repairs made to the vessel on *prior voyages*. T.D. 80–237 changed the certification requirement to apply only to all equipment or parts or materials and repairs made *within one year preceding the application*, in conformity with the statutory language (19 U.S.C. 1466(d)).

We believe that part of the problem is confusion caused by combining the former declaration form (Customs Form 3415) and the former vessel repair entry form (Customs Form 7535) into one form (Customs Form 226) by Treasury Decision 79–86. While the former two forms have been combined, the differences between a declaration and a vessel repair entry remain. When Customs Form 226 is presented as a declaration under section 4.7(d)(1), Customs Regulations, it is considered part of the inward foreign manifest. The Declaration box on Customs Form 226 should be checked and only items 1 through 16 need be completed (except for costs, which can be reasonably estimated on the declaration, those items cover information the master would normally be aware of when the manifest is presented (see section 4.7(d)(3), Customs Regulations)). When Customs Form 226 is filed as a vessel repair entry under section 4.14(b)(2), Customs Regulations, it is considered a document somewhat similar to a consumption entry. The Entry box on Customs Form 226 should be checked and all items except items 16, 17, and 18 should be completed. When Customs Form 226 is filed as an entry, it can be filed as a complete or as an incomplete entry and this should be indicated in item 25 (section 4.14(b)(2), Customs Regulations). As stated above, when Customs Form 226 is filed as an incomplete entry, the required evidence must be submitted within 60 days, which on proper request can be extended 30 days by the field or further by Headquarters (see section 4.14(b)(2)(ii), Customs Regulations).

The letter from (Co. Name) also states that pro forma invoices "which are apparently to contain the same unavailable information that is required on form 226" have been required with vessel repair entries. Obviously some evidence of the cost of items listed on a vessel repair entry must be submitted when Customs Form 226 is submitted as a complete entry (see section 4.14(b)(2)(ii), Customs Regulations). Since we know that it is difficult at times for vessel owners or their representatives to present commercial invoices, we have permitted the submission of pro forma invoices to assist vessel owners. Pro forma invoices are provided for in Manual Supplement 3730–01, January 22, 1981, and are only required when commercial invoices covering all repairs and/or equipment are unavailable (so that the entry would not be a full and complete account (section 4.14(b)(2)(ii)). As stated in Manual Supplement 3730–01, a pro forma invoice is acceptable if it contains a reasonable estimate of the cost of repairs and/or equipment.

It is hoped that the above explanation will clear up the confusion (Co. Name) states that they have experienced with 4.14, Customs Regulations. Please inform (Co. Name) that we would appreciate their views and comments on this clarification. Further, we would appreciate any comments you care to offer on this matter.

(C.S.D. 81-230)

Vessel Repairs: Dutiability of Travel Charges, Gas Free Certification, and Alterations

Date: July 16, 1981
File: VES-13-18-CO:R:CD:C
105207 JM

REGIONAL COMMISSIONER OF CUSTOMS,
Los Angeles, California.

DEAR SIR: A letter dated June 15, 1981, from the Regional Director, Classification and Value Division, requested a ruling on a petition for relief from duty under 19 U.S.C. 1466 on the cost of repairs to the SS NEW YORK, vessel repair entry No. 354657, dated May 1, 1980.

We have reviewed the entire file on this matter and agree with your proposed liquidation with the exception of items as listed in comments below:

Comment 1. In your proposed liquidation, the charges for the service engineer's travel and waiting time shown on Document #2, page 2 and Document #23, page 103 are shown to be dutiable. This proposed action is in agreement with Headquarters ruling 104940 dated December 4, 1980, which was published as C.S.D. 81-137 and held that labor charges for the time workmen were awaiting arrival of a vessel are considered a part of the cost of repairs, citing CIE 601/67 concerning portal to portal pay of workmen. However, the U.S. Court of International Trade has held that compensation for "travel time" is not dutiable under 19 U.S.C. 1466. *Mount Washington Tanker Company A Subsidiary of Victory Carriers, Inc.*, v. *United States*, 1 CIT —Slip Op. 80-8 (Dec. 5, 1980). In reaching its conclusion in the Mt. Washington case, the Court stated "It is clear that the travel compensation paid the workers, although an expense incident to the repairs, was not repairs." Under the circumstances, the charges for the service engineer's travel and waiting time should be liquidated as not dutiable.

We note that Document #15, page #88, and Document #27 page 112 contain charges for "Travelling time" which are correctly shown free of duty on the proposed liquidation.

Comment 2. In the proposed liquidation, the charges for a gas free certification as shown on Document #10, items #1 and #1980, totalling 35,300 DM, are shown to be dutiable. In CIE 1188/60 we

held that the charges for a gas free certification should be apportioned between repair "costs which are to be remitted and those for which relief is not warranted and duty assessed on that portion of the charge applicable to items which are not being remitted." Since the gas free certification is the subject case was required to complete dutiable repairs and non-dutiable permanent modifications, only that portion of the charge for the gas free certification applicable to dutiable items is dutiable.

Comment 3. The charge for installation of tachometers on each of the four main cargo pumps (Document #10, item #54) is considered on the proposed liquidation to be dutiable as a purchase of equipment. The record indicates that these tachometers were additions to the pumps rather than replacement items. In a ruling in case number 104937, dated April 9, 1981, copy enclosed, we held "The alteration or modification to the cooling system of a vessel in order to convert it from salt water to fresh water operation, when no restoration of the system to previous working condition from a state of decay, destruction, or injury is involved, is not dutiable as a 'repair' under 19 U.S.C. 1466." Since the installation of the tachometers constitute an alteration or modification of the main cargo pumps, this charge is not dutiable.

Comment 4. While we agree that Document #10, and Item #110 covering permanent installation of a platform with handrails and a ladder is a permanent modification and not dutiable, the amount of 6,796 DM claimed not dutiable is incorrect. The claimed amount includes 4,696 DM charged for dutiable repairs to the Inert Gas main deck swing value (Item 110). The correct amount attributable to the modification is 2,100 DM.

Comment 5. We agree with the statement in the letter dated December 30, 1980, from the Chief, Liquidation Branch, to the petitioner that charges in the amount of R 198.00 for "telex and overseas telephone calls" appearing as Item 102, Document 19 are not dutiable under 19 U.S.C. 1466. However, in telephone conversations of July 8 and 9, 1981, between Mr. James Phillips of your office and Mr. John Mathis of my staff, Mr. Phillips requested a citation to a ruling supporting this position. These expenses are similar to travel compensation paid workers in that the cost of the telex and telephone messages "although an expense incident to the repairs, was not an expense directly involved in the making of the repairs." Accordingly, the Mt. Washington case mentioned above may be cited as authority for holding the communication charges to be not dutiable.

U.S. Customs Service

Proposed Rulemaking

19 CFR Part 101

Proposed Change in the Field Organization of the Customs Service

AGENCY: U.S. Customs Service, Department of the Treasury.

ACTION: Proposed rule.

SUMMARY: This notice proposes to amend the Customs Regulations to change the field organization of the Customs Service by establishing, on a 2-year experimental basis, a new Customs port of entry at Springfield, Missouri, in the St. Louis, Missouri, Customs district. The proposed change is being made as part of Customs continuing program to obtain more efficient use of its resources and to provide better service to carriers, importers, and the public.

DATE: Comments must be received on or before (30 days from the date of publication in the Federal Register).

ADDRESS: Written comments (preferably in triplicate) may be addressed to the Commissioner of Customs, Attention: Regulations Control Branch, U.S. Customs Service, 1301 Constitution Avenue, NW., Room 2426, Washington, D.C. 20229.

FOR FURTHER INFORMATION CONTACT: Richard C. Coleman, Office of Inspection, U.S. Customs Service, 1301 Constitution Avenue, NW., Washington, D.C. 20229 (202–566–8157).

SUPPLEMENTARY INFORMATION:

Background

Springfield, Missouri, is a community of 165,000 in the southern section of the state. Even though it is served by rail, air, and highway transportation, all imported merchandise destined for Springfield must be entered through distant ports of entry in St. Louis and Kansas City, Missouri, and Peoria, Illinois. The nearest of these, Peoria, is 170 miles away.

On May 7, 1980, the Springfield Chamber of Commere submitted an application to Customs requesting the establishment of a Customs

best copy available

port of entry in that city. Although data submitted in support of the Chamber's request indicated that Customs-related activity in the area exceeded Customs minimum requirements for establishing ports of entry, it did not include sufficient documentation to permit a fair evaluation of community and business support for the proposal. Accordingly, Customs was reluctant to commit resources to the project until the need for, and potential use of, the port could be shown.

Additional data subsequently forwarded to Customs indicates that strong business support does exist for the establishment of the port of entry and that parties in Springfield are considering the possibility of establishing a foreign trade zone there. In addition, a major national corporation has stated that it is considering radically increasing the production capacity of its Springfield plant.

On the basis of this information, Customs believes that there is potential use for a port of entry at Springfield and proposes to establish a port of entry there on a 2-year experimental basis. To verify that the projected workload does materialize, Customs will evaluate the activity at Springfield at the end of the 2-year period before making a final determination about the establishment of a permanent port of entry at this location.

The geographical limits of the Springfield, Missouri, Customs port of entry would encompass all of the territory within Greene and Christian Counties, Missouri.

Amendment to the Regulations

If the proposed change is adopted, the list of Customs regions, districts, and ports of entry in section 101.3, Customs Regulations (19 CFR 101.3), will be amended accordingly.

Comments

Before adopting this proposal, consideration will be given to any written comments timely submitted to the Commissioner of Customs. Comments submitted will be available for public inspection in accordance with section 103.8(b), Customs Regulations (19 CFR 103.8(b)), on normal business days between the hours of 9:00 a.m. and 4:30 p.m. at the Regulations Control Branch, Room 2426, U.S. Customs Service, 1301 Constitution Avenue, NW., Washington, D.C. 20229.

Executive Order 12291

Because this proposal will not result in a "major" rule as defined in section 1(b) of E.O. 12291, the regulatory impact analysis and review prescribed by section 3 of the E.O. is not required.

Regulatory Flexibility Act

Pursuant to the provisions of sections 605(b) of Title 5, United States Code (as added by section 3 of Pub L. 96–354, the "Regulatory Flexibility Act"), the Secretary of the Treasury has determined that, if promulgated, this proposal it is not likely to have a significant economic impact upon a substantial number of small entities. Accordingly, this proposal is not subject to the regulatory analysis or other requirements of 5 U.S.C. 603 and 604.

Customs routinely establishes, expands, and consolidates Customs ports of entry throughout the United States to accommodate the volume of Customs-related activity in various parts of the country. Although this proposal may have a limited effect upon some small entities in the Springfield area, it is not expected to be significant because the establishment of Customs ports of entry in other locations has not had a significant economic impact upon a substantial number of small entities to the extent contemplated by the Regulatory Flexibility Act.

Authority

This change is proposed under the authority vested in the President by section 1 of the Act of August 1, 1914, 38 Stat. 623, as amended (19 U.S.C. 2), and delegated to the Secretary of the Treasury by Executive Order No. 10289, September 17, 1951 (3 CFR 1949–1953 Comp., Ch. II), and pursuant to authority provided by Treasury Department Order No. 101–5 (46 FR 9336).

Drafting Information

The principal author of this document was Lawrence P. Dunham, Regulations Control Branch, Office of Regulations and Rulings, U.S. Customs Service. However, personnel from other Customs offices participated in its development.

John M. Walker, Jr.,
Assistant Secretary of the Treasury.

Dated: October 2, 1981.

[Published in the Federal Register Oct. 29, 1981 (46 FR 53448)]

United States Court of International Trade

One Federal Plaza

New York, N.Y. 10007

Chief Judge

EDWARD D. RE

Judges

Paul P. Rao
Morgan Ford
Scovel Richardson
Frederick Landis
James L. Watson
Herbert N. Maletz
Bernard Newman
Nils A. Boe

Senior Judge

SAMUEL M. ROSENSTEIN

Clerk

Joseph E. Lombardi

Decisions of the United States Court of International Trade

(Slip Op. 81–91)

R. E. ABBOTT, ET AL., PLAINTIFFS *v.* UNITED STATES SECRETARY OF LABOR, DEFENDANT

Before Re, *Chief Judge*.

Court No. 81–00028

Order

(Dated October 13, 1981)

Upon motion by plaintiffs for an order, pursuant to Rule 56.1,

directing that the above-entitled action be submitted for determination by a motion for review of the administrative determination upon the agency's record, defendant's response thereto, upon all papers and proceedings had herein, and upon due deliberation, it is hereby

ORDERED that plaintiffs' motion be granted; and that this action shall be submitted for determination as prescribed by Rule 56.1; and it is further

ORDERED that the motion papers and briefs submitted by the parties shall address the following issues:

(1) Whether the Secretary of Labor's determination denying plaintiffs' certification of eligibility for trade adjustment assistance pursuant to Section 223 of the Trade Act of 1974, 19 U.S.C. § 2273, violated plaintiffs' Constitutional guaranty of equal protection under the law in that the Secretary's determination resulted in dissimilar treatment of similarly situated workers without a rational or reasonable basis therefor; and

(2) Whether the Secretary of Labor's findings and resulting determination denying plaintiffs' certification of eligibility for trade adjustment assistance pursuant to Section 223 of the Trade Act of 1974, 19 U.S.C. § 2273, are supported by substantial evidence as contained in the administrative record certified and filed with this court;

and it is further

ORDERED that plaintiffs serve and file their motion papers and brief no later than November 3, 1981; and it is further

ORDERED that defendant serve and file his response to plaintiffs' motion papers and brief no later than December 3, 1981; and it is further

ORDERED that plaintiffs serve and file their reply to defendant's response no later than December 17, 1981.

(Slip Op. 81-93)

ZENITH RADIO CORPORATION, ET AL., PLAINTIFFS *v.* UNITED STATES, DEFENDANT

Before LANDIS, *Judge.*

Consolidated Court No. 81-6-00734

Motions To Intervene Granted

(Dated October 15, 1981)

LANDIS, *Judge:* In this action pursuant to section 516A(a)(2) of the Tariff Act of 1930, as amended (19 U.S.C. § 1516a (a)(2)), the

following applicants move for leave to intervene pursuant to Rule 24(a):

> Sanyo Electric Inc.; Hitachi, Ltd.; Hitachi Sales Corporation of America; Hitachi Sales Corporation of Hawaii; Mitsubishi Electric Corporation of Tokyo, Japan; Mitsubishi Electric Sales America, Inc. of Compton, California; Nippon Electric Co., Ltd. of Tokyo, Japan; NEC America, Inc. of Elk Grove, Illinois; Toshiba Corporation; Toshiba America, Inc.; Toshiba Hawaii, Inc.; Matsushita Electric Industrial Co., Ltd., Panasonic Company and Quasar Company (divisions of Matsushita Electric Corporation of America); Panasonic Hawaii, Inc.; Panasonic Sales Company (a division of Matsushita Electric of Puerto Rico, Inc.); Victor Company of Japan, Limited; and U.S. JVC Corp.

These various motions to intervene are consolidated herein for purposes of this decision. All proposed intervenors have served an answer to the *Zenith* complaint accompanying their motion to intervene.

A related action brought by the Committee to Preserve American Color Television (Compact) and Imports Committee, Tube Division, Electronic Industries Association (Electronic) was consolidated with this action by court order dated August 24, 1981.

Plaintiffs Compact and Electronic oppose the intervention motions on the grounds that the moving intervenors have not accompanied their intervention motions with a proposed pleading, namely, an answer to the Compact/Electronic complaint, as required by Rule 24(c).[1]

In view of the fact that this action has been consolidated and all proposed applicants have answered one complaint (Zenith), and the further fact that Congress intended that this type of dumping review proceeding be handled expeditiously and with preference over other matters, 28 U.S.C. § 2647(4), it would be an inappropriate exercise of judicial discretion to deny these motions on such technical grounds which could be appropriately cured by renoticing the instant motions with the proper papers in support thereof. Such disposition would be both a waste of judicial time and economy and cause unnecessary expense to all parties involved.

Accordingly, the motions to intervene are granted *on condition that* the moving applicants serve an answer or otherwise move with respect to the Compact/Electronic complaint within twenty (20) days of entry of this order.

---

[1] Plaintiffs Compact and Electronic do not contest the proposed intervenors substantive right to intervene. All applicants herein have an absolute right to intervene as they are interested parties as defined by section 771(9)(A) of the Tariff Act of 1930, as amended [19 U.S.C. § 1677(9)(A)], and have standing as a matter of unconditional right pursuant to 28 U.S.C. § 2631(j)(1)(B) having participated in the administrative proceedings resulting in determinations under review before the court.

Decisions of the United States Court of International Trade

Abstracts

Abstracted Protest Decisions

DEPARTMENT OF THE TREASURY, *October 19, 1981.*

The following abstracts of decisions of the United States Court of International Trade at New York are published for the information and guidance of officers of the Customs and others concerned. Although the decisions are not of sufficient general interest to print in full, the summary herein given will be of assistance to Customs officials in easily locating cases and tracing important facts.

WILLIAM VON RAAB,
Commissioner of Customs.

DECISION NUMBER	JUDGE & DATE OF DECISION	PLAINTIFF	COURT NO.	ASSESSED	HELD	BASIS	PORT OF ENTRY AND MERCHANDISE
				Par. or Item No. and Rate	Par. or Item No. and Rate		
P81/161	Re, C.J. October 13, 1981	Intertec, Inc.	76-4-01014	Item 638.70 35%	Item 688.40 5.5%	Sanyo Electric Inc. v. U.S. (C.D. 4855, aff'd C.A.D. 1258)	San Francisco Power failure lights

P81/162	Rao, J. October 13, 1981	C.J. Tower & Sons of Buffalo, Inc.	77-2-00187	Item 682.60 7.5%	Items 807.00/682.60 7.5% on appraised value of imported merchandise less value of products of U.S.; dutiable values are $10,480 (entry No. 315133), $9,579 (entry No. 203850), and $39,171 (entry No. 254371)	Agreed statement of facts	Buffalo American goods returned; articles ("stators") assembled abroad in part of fabricated stator frames which are products of U.S.
P81/163	Rao, J October 14, 1981	C. J. Tower & Sons of Buffalo, Inc.	78-8-01473	Item 682.60 7.5%	Items 807.00/ 682.60 7.5% on appraised value of imported merchandise less value of products of U.S.; dutiable values are $41,023 (entry No. 201842) and $14,923 (entry No. 249945)	Agreed statement of facts	Buffalo American good returned; articles ("stators") assembled abroad in part of fabricated stator frames which are products of U.S.

DECISION NUMBER	JUDGE & DATE OF DECISION	PLAINTIFF	COURT NO.	ASSESSED	HELD	BASIS	PORT OF ENTRY AND MERCHANDISE
				Par. or Item No. and Rate	Par. or Item No. and Rate		
P81/164	Newman, J. October 14, 1981	Stone and Downer	79-10-01531	Item 608.52 10.5%, plus additional duties under items 607.01 and 607.02 on chromium and molybdenum content	Item 609.82 2% + 0.1¢ per lb., plus additional duties, *supra*	Overton & Co. v. U.S. (C.D. 4875)	Boston Hot rolled, sectional stee shapes, alloyed; not an nealed, drilled, punched, nor otherwise advanced
P81/165	Newman, J. October 14, 1981	Stone and Downer	79-10-01533	Item 608.52 10.5%, plus additional duties under items 607.01 and 607.02 on chromium and molybdenum content	Item 609.82 2% + 0.1¢ per lb., plus additional duties, *supra*	Overton & Co. v. U.S. (C.D. 4875)	Boston Hot rolled, sectional steel shapes, alloyed; not annealed, drilled, punched, nor otherwise advanced
P81/166	Newman, J. October 14, 1981	Stone and Downer	79-10-01536	Item 608.52 10.5%, plus additional duties under items 607.01 and 607.02 on chromium and molybdenum content	Item 609.82 2% + 0.1¢ per lb., plus additional duties, *supra*	Overton & Co. v. U.S. (C.D. 4875)	Boston Hot rolled, sectional steel shapes, alloyed; not annealed, drilled, punched, nor otherwise advanced

P81/167	Newman, J. October 14, 1981	Stone and Downer	80-1-00137	Item 608.52 10.5%, plus additional duties under items 607.01 and 607.02 on chromium and molybdenum content	Item 609.82 2% + 0.1¢ per lb. plus additional duties, *supra*	Overton & Co. v. U.S. (C.D. 4875)	Boston Hot rolled, sectional steel shapes, alloyed; not annealed, drilled, punched, nor otherwise advanced
P81/168	Newman, J. October 14, 1981	Stone and Downer	80-1-00140	Item 608.52 10.5%, plus additional duties under items 607.01 and 607.02 on chromium and molybdenum content	Item 609.82 2% + 0.1¢ per lb., plus additional duties, *supra*	Overton & Co. v. U.S. (C.D. 4875)	Boston Hot rolled, sectional steel shapes, alloyed; not annealed, drilled, punched, nor otherwise advanced
P81/169	Newman, J. October 14, 1981	Wetherell Brothers, Inc.	79-10-01537	Item 608.52 10.5%, plus additional duties under items 607.01 and 607.02 on chromium and molybdenum content	Item 609.82 2% + 0.1¢ per lb., plus additional duties, *supra*	Overton & Co. v. U.S. (C.D. 4875)	Boston Hot rolled, sectional steel shapes, alloyed; not annealed, drilled, punched, nor otherwise advanced

DECISION NUMBER	JUDGE & DATE OF DECISION	PLAINTIFF	COURT NO.	ASSESSED	HELD	BASIS	PORT OF ENTRY AND MERCHANDISE
				Par. or Item No. and Rate	Par. or Item No. and Rate		
P81/170	Newman, J. October 14, 1981	Wetherell Brothers, Inc.	80-2-00376	Item 606.52 10.5%, plus additional duties under items 607.01 and 607.02 on chomium anrdmolyb-denum content	Item 609.82 2% + 0.1¢ per lb., plus additional duties, *supra*	Overton & Co. v. U.S. (C.D. 4875)	Boston Hot rolled, sectional steel shapes, alloyed; not annealed, drilled, punched, nor otherwise advanced
P81/171	Newman, J. October 14, 1981	Wetherell Brothers, Inc.	80=2-00378	Item 608.52 10.5%, plus additional duties under items 607.01 and 607.02 on chromium and molyb-denum content	Item 609.82 20.1¢% + per lb., plus additional duties, *supra*	Overton & Co. v. U.S. (C.D. 4875)	Boston Hot rolled, sectional steel shapes, alloyed; not annealed, drilled, punched, nor otherwise advanced
P81/172	Newman, J. October 15, 1981	Stone and Downer	79=10-01530	Item 608.52 10.5%, plus additional duties under items 607.01 and 607.02 on chromium and molyb-denum content	Item 609.82 2% + 0.1¢ per lb., plus additional duties, *supra*	Overton & Co. v. U.S. (C.D. 4875)	Boston Hot rolled, sectional steel shapes, alloyed; not annealed, drilled, punched, nor otherwise advanced

P81/173	Newman, J. October 15, 1981	Wetherell Brothers, Inc.	80-6-00962	Item 608.52 10.5%, plus additional duties under items 607.01 and 607.02 on chromium and molybdenum content	Item 609.82 2% + 0.1¢ per lb., plus additional duties, *supra*	Overton & Co. v. U.S. (C. D. 4875)	Boston Hot rolled, sectional steel shapes, alloyed; not annealed, drilled, punched, or otherwise advanced
P81/174	Newman, J. October 15, 1981	Wetherell Brothers, Inc.	80-12-00120	Item 608.52 10.5%, plus additional duties under items 607.01 and 607.02 on chromium and molybdenum content	Item 609.82 2% + 0.1¢ per lb., plus additional duties, *supra*	Overton & Co. v. U.S. (C. D. 4875)	Boston Hot rolled, sectional steel shapes, alloyed; not annealed, drilled, punched, or otherwise advanced

356-609 O - 81 - 2

Decisions of the United States Court of International Trade

Abstracts

Abstracted Reappraisement Decisions

DECISION NUMBER	JUDGE & DATE OF DECISION	PLAINTIFF	COURT NO.	BASIS OF VALUATION	HELD VALUE	BASIS	PORT OF ENTRY AND MERCHANDISE
R81/363	Re, C.J. October 15, 1981	Nichimen Co., Inc.	76-7-01620	Export value	Appraised values shown on entry papers less additions included to reflect currency revaluation	C.B.S. Imports Corp. v. U.S. (C.D. 4739)	San Francisco Miscellaneous articles

R81/364	Re, C.J. October 15, 1981	Nichimen Co., Inc.	76-8-01765	Export value	Appraised values shown on entry papers less additions included to reflect currency revaluation	C.B.S. Imports Corp. v. U.S. (C.D. 4739)	Chicago Miscellaneous articles
R81/365	Rao, J. October 15, 1981	Mitsubishi International Corporation	75-1-00065, etc.	American selling price	Appraised values less 23%, per pair	Agreed statement of facts	Boston Footwear
R81/366	Rao, J. October 15, 1981	Mitsubishi International Corporation	75-4-00856, etc.	American selling price	Appraised values less 23%, per pair	Agreed statement of facts	Savannah Footwear
R81/367	Rao, J. October 15, 1981	Mitsubishi International Corporation	76-1-00227, etc.	American selling price	Appraised values less 23%, per pair	Agreed statement of facts	Baltimore Footwear

International Trade Commission Notices

Investigations by the U.S. International Trade Commission

DEPARTMENT OF THE TREASURY, OCTOBER 29, 1981

The appended notices relating to investigations by the U.S. International Trade Commission are published for the information of Customs officers and others concerned.

WILLIAM VON RAAB,
Commissioner of Customs.

In The Matter Of
CERTAIN THERMAL CONDUCTIVITY SENSING GEM TESTERS AND COMPONENTS THEREOF } Investigation No. 337-TA-100

Notice of Prehearing Conference and Hearing

Notice is hereby given that a prehearing conference will be held in this case at 9:00 a.m. on November 9, 1981, in the Dodge Center, Room 201, 1010 Wisconsin Avenue, N.W., Washington, D.C., and the hearing will commence immediately thereafter.

The purpose of the prehearing conference is to review the trial memoranda submitted by the parties, to stipulate exhibits into the record, and to discuss any questions raised by the parties relating to the hearing.

The Secretary shall publish this notice in the Federal Register.

Issued: October 26, 1981.

JANET D. SAXON,
Administrative Law Judge.

Investigation No. 701-TA-81 (Preliminary)

HARD-SMOKED HERRING FILETS FROM CANADA

AGENCY: United States International Trade Commission.

ACTION: Termination of investigation.

SUMMARY: On October 22, 1981, the McCurdy Fish Co., Lubec, Maine, notified the U.S. Department of Commerce and the U.S. International Trade Commission that it was withdrawing its countervailing-duty petition concerning hard-smoked herring filets in accordance with Commerce's recommendation (Commerce found that the data provided by the petitioner in support of the alleged Canadian subsidies was inadequate). Accordingly, the Commission terminates investigation No. 701–TA–81 (Perliminary) pursuant to its authority under section 207.13 of the Commission's Rules of Practice and Procedure.

EFFECTIVE DATE: October 22, 1981.

FOR FURTHER INFORMATION CONTACT: Mr. Larry Reavis, Office of Investigations, U.S. International Trade Commission; telephone 202–523–0296.

By order of the Commission.

Issued: October 26, 1981.

KENNETH R. MASON,
Secretary.

In the Matter of CERTAIN VACUUM BOTTLES AND COMPONENTS THEREOF	Investigation No. 337–TA–108

Notice of Investigation

AGENCY: U.S. International Trade Commission.

ACTION: Institution of investigation pursuant to 19 U.S.C. 1337.

SUMMARY: Notice is hereby given that a complaint was filed with the U.S. International Trade Commission on September 16, 1981, under section 337 of the Tariff Act of 1930 (19 U.S.C. 1337), on behalf of Union Manufacturing Co., Inc., 290 Pratt Street, Meriden, Connecticut 06450. The complaint alleges unfair methods of competition and unfair acts in the importation of certain vacuum bottles and components thereof into the United States, or in their sale, by reason of the alleged (1) infringement of complainant's common law trademark, (2) passing off, and (3) false designation of origin. The complaint further alleges that the effect or tendency of the unfair methods of competition and unfair acts is to destroy or substantially injure an industry, efficiently and economically operated, in the United States.

The complainant requests that, after a full investigation, the Commission issue either an order excluding said articles from entry into

the United States or an order directing respondents to cease and desist from engaging in said unfair acts.

AUTHORITY: The authority for institution of this investigation is contained in section 337 of the Tariff Act of 1930 and in section 210.12 of the Commission's Rules of Practice and Procedure.

SCOPE OF THE INVESTIGATION: Having considered the complaint, the U.S. International Trade Commission, on October 15, 1981, ordered that—

(1) Pursuant to subsection (b) of section 337 of the Tariff Act of 1930, an investigation be instituted to determine whether there is a violation of subsection (a) of section 337 in the unlawful importation of certain vacuum bottles and components thereof into the United States, or in their sale, by reason of the alleged (1) infringement of complainant's common law trademark, (2) passing off, or (3) false designation of origin, the effect or tendency of which is to destroy or substantially injure an industry, efficiently and economically operated, in the United States;

(2) For the purpose of the investigation so instituted, the following are hereby named as parties upon which this notice of investigation shall be served:

(a) The complainant is—

Union Manufacturing Co., Inc.
290 Pratt Street
Meriden, Ct. 06450

(b) The respondents are the following companies, alleged to be in violation of section 337, and are the parties upon which the complaint is to be served:

Hanbaek Trading Co.
C.P.O. Box 7590
Cho Yang Building
50–10 2KA
Chungmu-Ro Chung-ku
Seoul, Korea

Daymu-Hagemeyer (Taiwan) Co. Ltd.
519 Chung Shan N. Road
Section 5 Shih-Lin District
Taipei, Taiwan

Tay Yuan Industrial Co.
Box 282 Tao Yan
No. 4 Lane 56, Pao Lo Street
Tao Yuan, Taiwan, R.O.C.

Western Universal Mercantile Ltd.
15 East 26th Street
New York, N.Y. 10010

Direct Import, Inc.
1420 Landmeier Road
Elk Grove Village, Ill. 60007

Janco Industries, Inc.
190 South King Street
Honolulu, Ha. 96813

Progressive International Corp.
413 Fairview North
Seattle, Wash. 98109

Kenco Incentives, Inc.
7390 Ohms Lane
Edina, Minn. 55435

Wanco International
1485 Bayshore Boulevard
San Francisco, Calif. 94124

T, G & Y Stores Co.
3815 North Santa Fe
Oklahoma City, Ok. 73118

Wholesale Merchandisers
Meijer Division
2901 South Creyts Road
Grand Rapids, Mich. 49501

World Wide, Inc.
4567 West 78th Street
Minneapolis, Minn. 55431

(c) M. Brooke Murdock and John Milo Bryant, Unfair Import Investigations Division, U.S. International Trade Commission, 701 E Street NW., Washington, D.C. 20436, shall be the Commission investigative attorneys, a part to this investigation; and

(3) For the investigation so instituted, Donald K. Duvall, Chief Administrative Law Judge, U.S. International Trade Commission, 701 E Street NW., Washington, D.C. 20436, shall designate the presiding officer.

Responses must be submitted by the named respondents in accordance with section 210.21 of the Commission's Rules of Practice and Procedure (19 CFR 210.21). Pursuant to sections 201.16(d) and 210.21 (b) of the rules, such responses will be considered by the Commission if received not later than 20 days after the date of service of the com-

plaint. Extensions of time for submitting a response will not be granted unless good and sufficient cause therefor is shown.

Failure of a respondent to file a timely response to each allegation in the complaint and in this notice may be deemed to constitute a waiver of the right to appear and contest the allegations of the complaint and this notice, and to authorize the presiding officer and the Commission, without further notice to the respondent, to find the facts to be as alleged in the complaint and this notice and to enter both a recommended determination and a final determination containing such findings.

The complaint, except for any confidential information contained therein, is available for inspection during official working hours (8:45 a.m. to 5:15 p.m.) in the Office of the Secretary, U.S. International Trade Commission, 701 E Street NW., Washington, D.C. 20436, telephone 202-523-0161.

FOR FURTHER INFORMATION CONTACT: M. Brooke Murdock and John Milo Bryant, Unfair Import Investigations Division, U.S. International Trade Commission, telephone 202-523-0115 or 202-523-0419, respectively.

By order of the Commission.

Issued: October 23, 1981.

KENNETH R. MASON,
Secretary.

In the Matter of
CERTAIN THERMAL CONDUCTIVITY SENSING GEM TESTERS AND COMPONENTS THEREOF } Investigation No. 337-TA-100

Notice of Addition of Three Respondents and Termination of Investigation With Respect to Two Respondents

AGENCY: U.S. International Trade Commission.

ACTION: Addition of three respondents and termination of two respondents.

AUTHORITY: The authority for the Commission action in this matter is contained in section 337 of the Tariff Act of 1930 (19 U.S.C. § 1337) and 19 CFR § 210.22.

SUMMARY: Notice is herby given that the Commission has granted the joint motion of the parties to amend the notice of investigation to add Brunit Trading AB, of Stockholm, Sweden, Presidium, Inc., of Saugus, Calif., and Presidium Diamond Pte Ltd., of Singapore, as respondents in this investigation, and to terminate the investigation

with respect to respondents Presidium Diamonds Pte Ltd., of South Africa, and Lien International Trading Pte Ltd., of Singapore.

SUPPLEMENTAL INFORMATION: On May 20, 1981, the Commission, upon receipt of a complaint filed by Ceres Electronics Corp., Adams-Smith, and MSB Industries, Inc., published in the Federal Register (46 FR 27586) notice of an investigation to determine whether there is a violation of section 337(a) of the Tariff Act of 1930 in the importation of certain thermal conductivity sensing gem testers and components thereof into the United States, or in their sale, by reason of alleged (1) infringement by said thermal conductivity sensing gem testers of claims 21, 22, or 26 of U.S. Letters Patent 4,255,962; (2) infringement of claims 1, 2, 23, or 24 of U.S. Letters Patent 4,255,962 in the operation of said thermal conductivity sensing gem testers and the inducement of and/or contribution to said infringement; and (3) false advertising concerning such gem testers. The complaint also alleges that the effect or tendency of such unfair acts is to destroy or substantially injure an industry, efficiently and economically operated, in the United States.

On August 25, 1981, the parties filed a joint motion to amend the notice of investigation to add Brunit Trading AB, of Stockholm, Sweden, Presidium, Inc., of Saugus, Calif., and Pesidium Diamond Pte Ltd., of Singapore, as respondents in this investigation, and to terminate the investigation with respect to respondents Presidium Diamonds Pte Ltd., of South Africa, and Lien International Trading Pte Ltd., of Singapore. The administrative law judge certified the motion to the Commission with the recommendation that it be granted. There was no opposition to the proposed amendments.

Any party wishing reconsideration of the Commission's action must do so within fourteen (14) days of service of the Commission order. Any such petition must be in accord with the Commission's Rules of Practice and Procedure (19 CFR § 210.56).

Copies of the Commission's Action and Order and any other publci documents in this investigation are available for inspection during official working hours (8:45 a.m. to 5:15 p.m.) in the Office of the Secretary, United States International Trade Commission, 701 E Street NW., Washington, D.C. 20436, telephone 202–523–0161.

Notice of the institution of this investigation was published in the Federal Register of May 20, 1981 (46 FR 27586).

FOR FURTHER INFORMATION CONTACT: Scott M. Daniels, Esq., Office of General counsel, telephone 202–523–0480.

By order of the Commission.

Issued: October 23, 1981.

KENNETH R. MASON,
Secretary.

Investigation No. 731-TA-42 (Final)

MOTORCYCLE BATTERIES FROM TAIWAN

AGENCY: United States International Trade Commission.

ACTION: Institution of final antidumping investigation.

SUMMARY: As a result of a preliminary determination by the United States Department of Commerce that there is a reasonable basis to believe or suspect that exports of motorcycle batteries from Taiwan are being, or are likely to be, sold in the United States at less than fair value (LTFV) within the meaning of section 731 of the Tariff Act of 1930 (19 U.S.C. § 1673), the United States International Trade Commission hereby gives notice of the institution of investigation No. 731-TA-42 (Final) to determine whether an industry in the United States is materially injured, or is threatened with material injury, or the establishment of an industry in the United States is materially retarded by reason of imports of such merchandise. For the purposes of this investigation, motorcycle batteries are defined as lead-acid storage batteries principally dedicated for use in motorcycles, having a nominal output of 6 or 12 volts and rated between 2 and 28 ampere-hours (10-hour discharge rate), as provided for in item 683.10 of the Tariff Schedules of the United States. This investigation will be conducted according to the provisions of part 207, subpart C, of the Commission's Rules of Practice and Procedure (19 CFR § 207, 44 F.R. 76458).

EFFECTIVE DATE: October 14, 1981.

FOR FURTHER INFORMATION CONTACT: Mr. David Coombs, Office of Investigations, U.S. International Trade Commission, Room 350, 701 E Street NW., Washington, D.C. 20436; telephone 202-523-1376.

SUPPLEMENTARY INFORMATION: On June 9, 1981, the Commission unanimously determined, on the basis of the information developed during the course of investigation No. 731-TA-42 (Preliminary), that there was a reasonable indication that an industry in the United States was threatened with material injury by reason of imports of motorcycle batteries from Taiwan, which were allegedly being sold in the United States at LTFV. As a result of the Commission's affirmative preliminary determination, the Department of Commerce continued its investigation into the question of LTFV sales. Unless the investigation is extended, the final LTFV determination will be made by the Department of Commerce on or before December 28, 1981.

WRITTEN SUBMISSIONS: Any person may submit to the Commission a written statement of information pertinent to the subject of this investigation. A signed original and nineteen (19) true copies of each submission must be filed at the Office of the Secretary, U.S. Interna-

tional Trade Commission Building, 701 E Street NW., Washington, D.C. 20436, on or before January 8, 1982. All written submissions, except for confidential business data, will be available for public inspection.

Any business information for which confidential business treatment is desired shall be submitted separately. The envelope and all pages of such submissions must be clearly labeled "Confidential Business Information." Confidential submissions and requests for confidental treatment must conform with the requirements of section 201.6 of the Commission's Rules of Practice and Procedure (19 CFR § 201.6).

A staff report containing preliminary findings of fact will be available to all interested parties on December 23, 1981.

PUBLIC HEARING: The Commission will hold a public hearing in connection with this investigation on January 12, 1982, in the Hearing Room of the U.S. International Trade Commission Building, beginning at 10 a.m., e.s.t. Requests to appear at the hearing should be filed in writing with the Secretary to the Commission not later than the close of business (5:15 p.m., e.s.t.) on December 22, 1981. All persons desiring to appear at the hearing and make oral presentations must file prehearing statements and should attend a prehearing conference to be held at 10 a.m., e.s.t., on December 23, 1981, in Room 117 of the U.S. International Trade Commission Building. Prehearing statements must be filed on or before January 8, 1982.

Testimony at the public hearing is governed by section 207.23 of the Commission's Rules of Practice and Procedure (19 CFR § 207.23). This rule requires that testimony be limited to a nonconfidential summary and analysis of material contained in prehearing statements and to new information. The Commission will not receive prepared testimony for the public hearing, as would otherwise be provided for by rule 201.12(d). All legal arguments, economic analyses, and factual materials relevant to the public hearing should be included in prehearing statements in accordance with section 207.22. Posthearing briefs will also be accepted within a time specified at the hearing.

For further information concerning the conduct of the investigation, hearing procedures, and rules of general application, consult the Commission's Rules of Practice and Procedure, part 207, subparts A and C (19 CFR § 207), and part 201, subparts A through E (19 CFR § 201).

This notice is published pursuant to section 207.20 of the Commission's Rules of Practice and Procedure (19 CFR § 207.20, 44 FR 76472).

By order of the Commission.

Issued: October 22, 1981.

KENNETH R. MASON,
Secretary.

In the Matter of CERTAIN THERMAL CONDUCTIVITY SENSING GEM TESTERS AND COMPONENTS THEREOF	Investigation No. 337–TA–100

Notice of Cancellation of Prehearing Conference and Hearing

Notice is hereby given that a prehearing conference scheduled for November 2, 1981 and the hearing scheduled to commence immediately thereafter (46 FR 49679, October 7, 1981) are cancelled.

The Secretary shall publish this notice in the Federal Register.

Issued: October 21, 1981.

JANET D. SAXON,
Administrative Law Judge.

In the Matter of CERTAIN ULTRAFILTRATION MEMBRANE SYSTEMS AND COMPONENTS THEREOF, INCLUDING ULTRAFILTRATION MEMBRANES	Investigation No. 337–TA–107

Notice of Denial of Request for Temporary Relief

AGENCY: U.S. International Trade Commission.

ACTION: Denial of request for temporary relief.

SUMMARY: On October 16, 1981, the Commission denied complainants' request for temporary relief under section 337 of the Tariff Act of 1930 (19 U.S.C. §1337). This action is a sanction taken pursuant to Rule 210.36(b) of the Commission's Rules of Practice and Procedure (19 CFR § 210.36(b)) for complainants' failure to comply with discovery orders.

AUTHORITY: The authority for this action is contained in section 337 of the Tariff Act of 1930 and in section 210.36(b) of the Commission's Rules of Practice and Procedure (19 CFR 210.36(b).

FOR FURTHER INFORMATION CONTACT: Scott M. Daniels, Esq., Office of the General Counsel, U.S. International Trade Commission, 701E Street NW., Washington, D.C. 20436, telephone 202–523–0480.

By order of the Commission.

Issued: October 19, 1981.

KENNETH R. MASON,
Secretary.

Investigation No. 104–TAA–5

NOTICE OF SUSPENSION OF COUNTERVAILING DUTY INVESTIGATION CONCERNING SKI LIFTS AND PARTS THEREOF FROM ITALY, CANCELLATION OF PUBLIC HEARING, AND REQUEST FOR PUBLIC COMMENT ON TERMINATION OF INVESTIGATION

AGENCY: United States International Trade Commission.

ACTION: Request for comments on proposed termination of countervailing duty investigation under section 104(b) of the Trade Agreements Act of 1979 and notice of cancellation of public hearing and suspension of investigation pending public comment.

FOR FURTHER INFORMATION CONTACT: Mr. John MacHatton, Office of Investigations, telephone 202–523–0439.

SUPPLEMENTARY INFORMATION: The Trade Agreements Act of 1979, subsection 104(b)(1), requires the Commission in the case of a countervailing duty order issued under section 303 of the Tariff Act of 1930, upon the request of a government or group of exporters of merchandise covered by the order, to conduct an investigation to determine whether an industry in the United States would be materially injured, or threatened with material injury, or whether the establishment of such industry would be materially retarded, if the order were to be revoked. On March 28, 1980, the Commission received a request from the Delegation of the Commission of the European Communities for the review of the countervailing duty order on ski lifts and parts thereof from Italy (T.D. 68–288). The Commission instituted this investigation on August 10, 1981 and published notice of such institution in the Federal Register of August 19, 1981 (46 F.R. 42220). The notice also scheduled a public hearing for this investigation on October 21, 1981, in Washington, D.C.

The Commission received a letter on October 9, 1981 from Hall Ski Lift Company, the original petitioner for the countervailing duty order, withdrawing its petition for a countervailing duty order on ski lifts and parts thereof from Italy.

While there is no provision in the Trade Agreements Act of 1979, or in its legislative history, permitting termination of a section 104(b) investigation, termination of a properly instituted countervailing duty investigation is permitted under section 704(a) of the Tariff Act of 1930. Termination authority is explicit in cases based on newly filed countervailing duty petitions; it is implied with respect to existing countervailing duty orders.

Section 704(a) directs the Commission to solicit public comment prior to termination of an investigation and approve the termination only if it is in the public interest. In light of the Commission's duty to

consider the public interest, the Commission requests written comments from persons concerning the proposed termination of the investigation on ski lifts and parts thereof from Italy. These written comments must be filed with the Secretary to the Commission no later than 30 days after publication of this notice in the Federal Register.

This countervailing duty investigation concerning ski lifts and parts thereof from Italy is suspended for the duration of the 30-day public comment period. Further, the public hearing scheduled for 10:00 a.m., October 21, 1981, in the U.S. International Trade Commission Hearing Room is cancelled and will be rescheduled pending review of public comment.

By order of the Commission.

Issued: October 14, 1981.

KENNETH R. MASON,
Secretary.

Index

U.S. Customs Service

	T.D. No.
Treasury decisions:	
Cancellation of Customs approved public gauger	81-277
Customs approved public gauger	81-276
Facsimile seals and signatures	81-275

U.S. Customs Service Decisions

Applicability of coastwise laws to the towing of US Flag, etc	81-214
Classification:	
Certain technical publications	81-228
Different types of Naphthas	81-211
Laser drag scrapers	81-227
Oil well "Sucker Rods"	81-221
Sardines packed in tomato sauce	81-226
Customs Entry Bond:	
A surety on a Customs entry bond	81-223
Drawback:	
Accounting procedures	81-220
The applicability of the "Use" requirement	81-218
The applicability of 19 U.S.C. 1313(j) to light trucks	81-225
Containers such as boxes	81-222
Rolls of fabric cut to smaller rolls	81-219
Two or more consumption entries	81-215
In-Bond Carriers and Cartmen:	
Application for designation as a carrier	81-216
Temporary Importation Bond:	
Bond liability may be cancelled	81-212
The dutiability of valuable waste	81-224
Privileged foreign status merchandise	81-213
Vessels:	
Application of vessel repair regulations	81-229
Dutiability of travel charges	81-230
The transfer of LASH BARGES carrying merchandise	81-217

DEPARTMENT OF THE TREASURY
U.S. CUSTOMS SERVICE
WASHINGTON, D.C. 20229

OFFICIAL BUSINESS
PENALTY FOR PRIVATE USE, $300

POSTAGE AND FEES PAID
DEPARTMENT OF THE TREASURY (CUSTOMS)
(TREAS. 552)

15/46

Customs Bulletin

Regulations, Rulings, Decisions, and Notices concerning Customs and related matters

and Decisions

of the United States Court of Customs and Patent Appeals and the United States Court of International Trade

Vol. 15 NOVEMBER 18 1981 No. 46

NEWARK PUBLIC LIBRARY
DEC 8 1981
U. S. GOVT. PUBS.
DEPOSITORY 376

This issue contains

T.D. 81-278 and 81-279
Proposed Rulemaking
Recent Unpublished Customs Service Decisions
Protest Abstracts P81/175 Through P81/178
Reap. Abstracts R81/368 Through R81/376
International Trade Commission Notices

THE DEPARTMENT OF THE TREASURY
U.S. Customs Service

T 1. 11/3:

NOTICE

The abstracts, rulings, and notices which are issued weekly by the U.S. Customs Service are subject to correction for typographical or other printing errors. Users may notify the U.S. Customs Service, Logistics Management Division, Washington, D.C. 20229, of any such errors in order that corrections may be made before the bound volumes are published.

For sale by the Superintendent of Documents, U.S. Government Printing Office, Washington, D.C. 20402. Price: $2.25 (single copy domestic); $2.85 (single copy foreign). Subscription price: $85.00 a year domestic; $106.25 a year foreign.

U.S. Customs Service

Treasury Decisions

(T.D. 81-278)

Bonds

Approval and discontinuance of Carrier's Bonds, Customs Form 3587.

Bonds of carriers for the transportation of bonded merchandise have been approved or discontinued as shown below. The symbol "D" indicates that the bond previously outstanding has been discontinued on the month, day, and year represented by the figures which follow. "PB" refers to a previous bond, dated as represented by figures in parentheses immediately following, which has been discontinued. If the previous bond was in the name of a different company or if the surety was different, the information is shown in a footnote at the end of the list.

Dated: October 30, 1981.

Name of principal and surety	Date of bond	Date of approval	Filed with district director/area director/amount
Appollo Export Warehouse, Inc., 6900 N.W. 43rd St., Miami, FL; motor carrier; Peerless Ins. Co.	June 24, 1981	Aug. 27, 1981	Miami, FL $50,000
Arctic Express Ltd., 130 Adelaide St., West, Toronto, Ontario, Canada; motor carrier; The Continental Ins. Co.	Dec. 1, 1980	Sept. 28, 1981	Ogdensburg, NY $50,000
Big Valley Supply & Enterprises, Ltd., 284-700 6th Ave., SW, Calgary, Alberta, Canada; motor carrier; Ins. Co. of North America D 9/14/81	Sept. 12, 1973	Oct. 9, 1973	Great Falls, MT $25,000
Buffalo Marine Service, Inc., 8205 E. Erath, P.O. Box 5006, Houston, TX; water carrier; Royal Indemnity Co.	Sept. 9, 1981	Sept. 23, 1981	Houston, TX $100,000
Carolina, Clinchfield & Ohio Railway—See Seaboard Coast Line Railroad Co.			
Carolina, Clinchfield & Ohio Railway of South Carolina—See Seaboard Coast Line Railroad Co.			
Carrier Systems International Motor Freight, Inc., Sellers & O'Brien Sts., Kearny, NJ; motor carrier; Federal Ins. Co.	June 27, 1981	Sept. 16, 1981	Newark, NJ $50,000

Name of principal and surety	Date of bond	Date of approval	Filed with district director/area director/amount
Clinchfield Northern Railway of KY—See Seaboard Coast Line Railroad Co.			
Clinchfield Railroad Co.—See Seaboard Coast Line Railroad Co.			
Cloverleaf Transportation, Inc., 14 Keri Lane, Spring Valley, NY; motor carrier; The Continental Ins. Co.	Apr. 20, 1981	Aug. 31, 1981	New York Seaport $100,000
Confederate Container Transport Corp., 1374 N.W. 78th Ave., Miami. FL; motor carrier; St. Paul Fire & Marine Ins. Co.	Aug. 25, 1981	Sept. 23, 1981	Miami, FL $50,000
Crisis Transportation Co., 11510 Corkwood, Houston, TX; motor carrier; St. Paul Fire & Marine Ins. Co.	Sept. 18, 1981	Sept. 23, 1981	Houston, TX $25,000
Davis Transport, Inc., 216 Trade St., Missoula, MT; motor carrier; U.S. Fidelity & Guaranty Co. (PB1/20/81) D 9/28/81 [1]	Sept. 17, 1981	Sept. 28, 1981	Great Falls, MT $50,000
Glowatsky Piggyback Service, Inc., 524 Basin St., P.O. Box 537, Allentown, PA; motor carrier; The Aetna Casualty & Surety Co.	Aug. 12, 1981	Sept. 29, 1981	Philadelphia, PA $25,000
Golden Arrow, Inc., 15 Scout Ave., South Kearny, NJ; motor carrier; American Motorists Ins. Co.	Sept. 30, 1981	Sept. 30, 1981	Newark, NJ $50,000
Louisville and Nashville Railroad, 908 West Broadway, Louisville, KY; rail carrier; Safeco Ins. Co. of America (PB 8/1/79) D 9/16/81 [2]	Aug. 1, 1981	Sept. 16, 1981	Cleveland, OH $100,000
Louisville & Nashville Railroad Co.—See Seaboard Coast Line Railroad Co			
Mercury Freight Lines, Inc., 67 Midtown Park East, (P.O.B. 1247), Mobile, AL; motor carrier; Protective Ins. Co. (PB 10/13/75) D 9/11/81 [3]	Sept. 1, 1981	Sept. 11, 1981	Mobile, AL $50,000
Midland Transport Co., P.O. Box 929, Moncton, New Brunswick; motor carrier; Reliance Ins. Co.	June 23, 1980	Sept. 11, 1981	Portland, ME $25,000
Minnesota, Dakota & Western Railway Co., International Falls, MN; rail carrier; American Home Assurance Co. (PB 9/21/74) D 9/20/81 [4]	Sept. 21, 1981	Sept. 21, 1981	Duluth, MN $100,000
Morgan Trucking, Inc., Rt. 5, P.O. Box 11, Shelton, WA; motor carrier; Safeco Ins. Co. of America	July 8, 1981	Sept. 10, 1981	Seattle, WA $25,000
Pathfinder Lines, Inc., 7268-18th St., Edmonton, Alberta, Canada; motor carrier; The Continental Ins. Co.	July 14, 1981	Aug. 31, 1981	Great Falls, MT $25,000
Phoenix Motor Epxress, Inc., P.O. Box 5147, Baltimore, MD; motor carrier; The Aetna Casualty & Surety Co.	Sept. 21, 1981	Sept. 23, 1981	Baltimore, MD $50,000
Provost Cartage Inc., 7785 Hochelaga, Montreal, P.Q., Canada; motor carrier; Ins. Co. of North America (D 10/8/81)	Oct. 8, 1968	Oct. 8, 1968	Ogdensburg, NY $50,000

Name of principal and surety	Date of bond	Date of approval	Filed with district director/area director/amount
Rush Trucking, Inc., 200 S.W. 19th St., Fort Lauderdale, FL; motor carrier; St. Paul Fire & Marine Ins. Co.	Sept. 14, 1981	Sept. 21, 1981	Miami, FL $25,000
Seaboard Coast Line Railroad Co., and Louisville & Nashville Railroad Co., joint lessees Carolina, Clinchfield & Ohio Railway, Carolina, Clinchfield & Ohio Railway of S.C., & Clinchfield Northern Railway of KY, operating under the name of Clinchfield Railroad Co., Erwin, TN; rail carrier; Safeco Ins. Co. of America (PB 8/24/78) D 8/24/81 [6]	Aug. 24, 1981	Aug. 24, 1981	New Orleans, LA $50,000
Team Air Freight, Inc., 8920 Royal Lane North, Irving, TX; P.O. Box 61345, Dallas/Fort Worth Airport, TX; motor carrier; St. Paul Fire & Marine Ins. Co.	Sept. 14, 1981	Sept. 18, 1981	Dallas/Fort Worth, TX $25,000
Tennessee Cartage Co., Inc., P.O. Box 23193, Nashville, TN; motor carrier; The American Ins. Co. (PB 8/19/80) D 8/14/81 [4]	Aug. 14, 1981	Sept. 2, 1981	New Orleans, LA $25,000
Totran Transport, Ltd., P.O. Box 4830, Edmonton, Alberta, Canada; motor carrier; Ins. Co. of North America	July 20, 1981	Sept. 14, 1981	Great Falls, MT $25,000
Tryco Trucking Co., Inc., P O. Box 8825, Charlotte, NC; motor carrier; Hartford Accident & Indemnity Co.	Oct. 7, 1980	Sept. 28, 1981	Wilmington, NC $25,000
Walter & Sons Transportation, Inc., 141 Addison St., East Boston, MA; motor carrier; Washington International Ins. Co. D 9/22/81	July 19, 1979	Oct. 19, 1979	Boston, MA $25,000

[1] Surety is Royal Ins. Co. of America.
[2] Surety is Ins. Co. of North America.
[3] Surety is U.S. Fidelity & Guaranty Co.
[4] Surety is Firemen's Ins. Co. of Newark, NJ.
[5] Surety is Ins. Co. of North America.
[6] Surety is Safeco Ins. Co. of America.

BON—31—03

GEORGE C. STEUART
(For Marilyn G. Morrison
Director, Carriers, Drawback and Bonds Division.)

(T.D. 81-279)

Andrade and Tecate, California, Customs Ports of Entry; Change in Hours of Service

AGENCY: U.S. Customs Service, Department of the Treasury.

ACTION: Notice of change in hours of service.

SUMMARY: This notice announces a change in the hours of service at the Customs ports of entry at Andrade and Tecate, California. Currently, the hours of operation are 6:00 a.m. to midnight at Andrade and 7:00 a.m. to midnight at Tecate. The new hours of service at both ports will be 6:00 a.m. to 10:00 p.m. daily. The change will enable Customs to obtain more efficient use of its personnel, facilities and resources in the area.

EFFECTIVE DATE: The new hours of service will become effective on (30 days from the date of publication in the Federal Register).

FOR FURTHER INFORMATION CONTACT: Joseph E. O'Gorman, Office of Inspection, U.S. Customs Service, 1301 Constitution Avenue, NW., Washington D.C. 20229 (202–566–8157).

SUPPLEMENTARY INFORMATION:

BACKGROUND

Section 101.6, Customs Regulations (19 CFR 101.6), provides that each Customs office shall be open for the transaction of Customs business between the hours of 8:30 a.m. and 5:00 p.m. on all days of the year except Saturdays, Sundays, and national holidays. It also provides that services performed outside a Customs office generally shall be furnished between the hours of 8:00 a.m. and 5:00 p.m. Many offices provide service during hours in addition to those specified in the regulations.

The Customs ports of entry at Andrade, and Tecate, California, located on the United States-Mexican border, in the San Diego Customs district (Region VII), are open from 6:00 a.m. to midnight and 7:00 a.m. to midnight, respectively. However, because the volume of traffic passing through each port between the hours of 10:00 p.m. and midnight (an average of 12 vehicles) does not warrant providing regular service during these hours, district and regional Customs officials have recommended that the hours of service at these ports be changed so that both are open from 6:00 a.m. to 10:00 p.m. Closing both ports at 10:00 p.m. will permit better use of Customs manpower and reduce administrative expenses.

Because opening Tecate at 6:00 a.m. will provide additional service for approximately 100 local commuter vehicles it also has been recommended that that port be opened one hour earlier.

It is anticipated that Governmental savings will outweigh any public inconvenience resulting from the change. Both ports will remain open beyond the normal business hours set forth in the regulations and area businesses requiring port services after hours may contact local Customs officials for service which would be provided on a reimbursable basis.

Accordingly, effective (30 days from the date of publication in the Federal Register) the hours of service at the Customs ports of entry at Andrade and Tecate, California, will be from 6:00 a.m. to 10:00 p.m. daily.

Dated: September 29, 1981.

WILLIAM T. ARCHEY,
Acting Commissioner of Customs.

[Published in the Federal Register Nov. 6, 1981 (46 FR 55174)]

U.S. Customs Service

Proposed Rulemaking

(19 CFR Parts 10 and 12)

Proposed Amendments to the Customs Regulations Relating to the Entry of Certain Antique Articles Under the Endangered Species Act Amendments of 1978

AGENCY: U.S. Customs Service, Department of the Treasury.

ACTION: Proposed rule.

SUMMARY: This document proposes to amend the Customs Regulations to implement the Endangered Species Act Amendments of 1978 by establishing procedures for the importation of certain antique articles (other than scrimshaw) which otherwise would be prohibited entry by the Endangered Species Act of 1973.

The proposed amendments specify the antique articles which may be imported, the documentation required, and the ports at which the articles may be entered.

DATES: Comments must be received on or before (60 days from the date of publication in the Federal Register).

ADDRESS: Comments (preferably in triplicate) should be addressed to the Commissioner of Customs, Attention: Regulations and Research Division, U.S. Customs Service, 1301 Constitution Avenue, NW., Room 2426, Washington, D.C. 20229.

FOR FURTHER INFORMATION CONTACT: Harrison C. Feese, Entry, Examination and Liquidation Branch, U.S. Customs Service, 1301 Constitution Avenue, NW., Washington, D.C. 20229 (202–566–8651); or Special Agent Keith C. Frederick, U.S. Fish and Wildlife Service, Department of the Interior, 1375 K Street, NW., Washington, D.C. 20005 (202–343–9242).

SUPPLEMENTARY INFORMATION:

BACKGROUND

To implement the policy of Congress that all Federal departments and agencies should seek to conserve endangered and threat-

ened species of fish, wildlife, or plants, the Secretary of the Interior under section 4 of the Endangered Species Act of 1973 (16 U.S.C. 1538) (the "1973 Act"), prescribed regulations in Part 17, Title 50, Code of Federal Regulations (50 CFR Part 17), which prohibit or restrict the importation into the United States of any endangered or threatened species listed in 50 CFR 17.11 or 17.12.

The Endangered Species Act Amendments of 1978 (Pub. L. 95–632, November 10, 1978, 16 U.S.C. 1531, *et seq.*) (the "1978 Act") amended the 1973 Act to permit the importation of certain antique articles (other than scrimshaw) which: (1) were made before 1830; (2) are composed in whole or in part of any endangered or threatened species listed in 50 CFR 17.11 or 17.12; (3) have not been repaired or modified with any part of any endangered or threatened species on or after December 28, 1973; and (4) are entered at a designated port. Scrimshaw is defined in a 1976 amendment to the 1973 Act as "any art form which involves the etching or engraving of designs upon, or the carving of figures, patterns, or designs from, any bone or tooth of any marine mammal of the order Cetacea." (Pub. L. 94–359, July 12, 1976, 16 U.S.C. 1539.)

Under section 5 of the 1978 Act, the Secretary of the Treasury, after consultation with the Secretary of the Interior, is authorized to establish by regulation the documentation necessary for the importation of certain antique articles and to designate a port or ports within each Customs region at which the articles shall be entered.

To implement the 1978 Act, it is proposed to add a new paragraph (g) to section 10.53, Customs Regulations (19 CFR 10.53), to specify the antique articles which may be imported under section 5 of the 1978 Act, and to require the importer of these articles to file a "Declaration for Importation or Exportation of Fish or Wildlife" (USFWS Form 3–177) at the designated port or ports of entry, with the district director of Customs, who will forward the form to the U.S. Fish and Wildlife Service (USFWS), Department of the Interior. The first sentence of section 10.53(d) also would be changed to indicate that the procedure for assessing duty on repaired or renovated antique articles also applies to articles admitted under the new provision of section 10.53(g).

Section 10.53(e), Customs Regulations, would be revised to indicate that antique furniture admitted under new section 10.53(g) must be entered at one of the designated ports of entry.

It also is proposed to redesignate section 12.26(g), Customs Regulations (19 CFR 12.26(g)), as (g)(1), and to add a new paragraph (g)(2) to provide that any antique article imported under proposed section 10.53(g) shall be entered at one of the ports designated in each region for this purpose. For the convenience of importers and the agencies

involved, in some regions more than one port would be designated. It is proposed that entry of the antique articles would be permitted only at the following ports:

Region I—Boston, Massachusetts
Region II—New York, New York
Region II—Philadelphia, Pennsylvania
Region IV—Miami, Florida, San Juan, Puerto Rico
Region V—New Orleans, Louisiana
Region VI—Houston, Texas
Region VII—Los Angeles, California
Region VIII—San Francisco, California, Anchorage Alaska, Honolulu, Hawaii
Region IX—O'Hare International Airport, Chicago, Illinois

The designated ports of entry would be staffed with Customs officers qualified to identify antiques which may be admitted under the 1978 Act.

Conforming amendments also would be made to sections 12.26 and 12.29, Customs Regulations (19 CFR 12.26, 12.29), to change the name "Bureau of Sport Fisheries and Wildlife" to "U.S. Fish and Wildlife Service," wherever the former name appears.

COMMENTS

Before adopting this proposal, consideration will be given to any written comments submitted to the Commissioner of Customs. Comments submitted will be available for public inspection in accordance with section 103.8(b), Customs Regulations (19 CFR 103.8(b)), on normal business days between the hours of 9:00 a.m. to 4:30 p.m. at the Regulations Control Branch Room 2426, Headquarters, U.S. Customs Service, 1301 Constitution Avenue, NW., Washington, D.C. 20229.

EXECUTIVE ORDER 12291

The proposed regulation is not a major regulation as defined in section 1(b) of E.O. 12291. Accordingly, a regulatory impact analysis is not required.

REGULATORY FLEXIBILITY ACT

The provisions of the Regulatory Flexibility Act relating to an initial and final regulatory flexibility analysis (5 U.S.C. 603, 604) are not applicable to this proposal because the rule, if promulgated, will not have a significant economic impact on a substantial number of small entities. Any economic impact flows directly from the Endangered Species Act Amendments of 1978 and not the proposed implementing regulations. The proposal is not expected to have a significant secondary or incidental effect on a substantial number of small enti-

ties; impose, or otherwise cause, a significant increase in the reporting, recordkeeping, or other compliance burdens on a substantial number of small entities; or generate significant interest or attention from entities through comments, either formal or informal.

Accordingly, it is hereby certified under the provisions of section 3 of the Regulatory Flexibility Act (5 U.S.C. 605(b)) that the rule, if promulgated, will not have a significant economic impact on a substantial number of small entities.

DRAFTING INFORMATION

The principal author of this document was Laurie S. Amster, Regulations Control Branch, Office of Regulations and Rulings, U.S. Customs Service. However, personnel from other Customs offices, the USFWS and the National Marine Fisheries Service, National Oceanic and Atmospheric Administration, Department of Commerce, participated in its development.

AUTHORITY

This document is issued under authority of R.S. 251, as amended, 77A Stat. 14, section 624, 46 Stat. 759, section 101, 76 Stat. 72, General Headnote 11, Tariff Schedules of the United States (19 U.S.C. 66, 1624, 1202); Pub. L. 93–205, Pub. L. 95–632 (16 U.S.C. 1531, *et seq.*).

PROPOSED AMENDMENTS

It is proposed to amend Parts 10 and 12, Customs Regulations (19 CFR Parts 10, 12), as set forth below:

PART 10—ARTICLES CONDITIONALLY FREE, SUBJECT TO A REDUCED RATE, ETC.

It is proposed to amend section 10.53 by changing the first sentence of paragraph (d), revising paragraph (e), and by adding a new paragraph (g), to read as follows:

10.53 Antiques.

* * * * * * *

(d) Antiques of the age prescribed by items 766.20 and 766.25, Tariff Schedules of the United States, or admitted under the provisions of paragraph (g) of this section, shall be admitted free of duty though repaired or renovated. * * *

(e) Except for furniture admitted under the provisions of paragraph (g) of this section, furniture claimed to be free of duty under

item 766.20 or 766.25 may be entered for consumption at any port of entry within the customs territory of the United States.

* * * * * * *

(g)(1) Antique articles (other than scrimshaw) otherwise prohibited entry by the Endangered Species Act of 1973 (16 U.S.C. 1521, *et seq.*) may be entered if the article:

(i) Is composed in whole or in part of any endangered or threatened species listed in 50 CFR 17.11 or 17.12,

(ii) Was made before 1830,

(iii) Has not been repaired or modified with any part of any such endangered or threatened species, on or after December 28,1973,

(iv) Is entered at a port designated in section 12.26 of this chapter,

(v) A "Declaration for Importation or Exportation of Fish or Wildlife" (USFWS Form 3–177) is filed at the time of entry with the district director of Customs who will forward the form to the U.S. Fish and Wildlife Service, and

(vi) The importer meets the requirements of paragraphs (a), (b), and (c) of this section.

(2) Scrimshaw is defined as an art form which involves the etching and engraving of designs upon, or the carving of figures, parterns, or designs from, any bone or tooth of any marine mammal of the order Cetacea.

PART 12—SPECIAL CLASSES OF MERCHANDISE

1. It is proposed to redesignate paragraph (g) of section 12.26 as (g)(1) and to add a new paragraph (g)(2), and to amend the section heading thereto, to read as follows:

WILD ANIMALS, BIRDS, AND INSECTS

* * * * * * *

12.26 Importations of wild animals, fish, amphibians, reptiles, mollusks, and crustaceans; prohibited and endangered and threatened species; designated ports of entry; permits required.

(g)(2) Any antique article imported under section 10.53(g) of this chapter shall be entered at one of the following ports:

Region I—Boston, Massachusetts
Region II—New York, New York
Region III—Philadelphia, Pennsylvania
Region IV—Miami, Florida, San Juan, Puerto Rico
Region V—New Orleans, Louisiana
Region VI—Houston, Texas
Region VII—Los Angeles, California
Region VIII—San Francisco, California, Anchorage, Alaska, Honolulu, Hawaii
Region IX—O'Hare International Airport, Chicago, Illinois

2. It is proposed to change "Bureau of Sport Fisheries and Wildlife" to "U.S. Fish and Wildlife Service" wherever the former name appears in sections 12.26 and 12.29.

WILLIAM T. ARCHEY,
Acting Commissioner of Customs.

Approved: September 2, 1981.

JOHN P. SIMPSON,
Acting Assistant Secretary of the Treasury.

[Published in the Federal Register Nov. 9, 1981 (46 FR 55273)]

356-510 0 - 81 - 2

Recent Unpublished Customs Service Decisions

The following listing of recent administrative decisions issued by the U.S. Customs Service, and not otherwise published, is published for the information of Customs officers and the importing community. Although the decisions are not of sufficient general interest to warrant publication as Customs Service Decisions, the listing describes the issues involved and is intended to aid Customs officers and concerned members of the public in identifying matters of interest which recently have been considered by the U.S. Customs Service.

A copy of any decision included in this listing, identified by its date and file number, may be obtained in a form appropriate for public distribution upon written request to the Office of Regulations and Rulings, Attention: Legal Retrieval and Dissemination Branch, Room 2404, U.S. Customs Service, 1301 Constitution Avenue, N.W., Washington, D.C. 20229. These copies will be made available at a cost to the requester of $0.10 per page. However, the Customs Service will waive this charge if the total number of pages copied is ten or less.

Decisions listed in earlier issues of the Customs Bulletin, through June 15, 1981 are available in microfiche format at a cost of $34.05 ($0.15 per sheet of fiche). It is anticipated that additions to the micofiche will be made quarterly and subscriptions are available. Requests for the microfiche now available and for subscriptions should be directed to the Legal Retrieval and Dissemination Branch. Subscribers will automatically receive updates as they are issued and will be billed accordingly.

Dated: November 4, 1981.

B. JAMES FRITZ,
Director, Regulations Control and Disclosure Law Division.

Date of decision	File No.	Issue
10-15-81	065899	Classification: yarn Christmas tree ornament (389.62)
10-08-81	068154	Classification: childrens' slippers appraised under the American Selling Price method of valuation

Date of decision	File No.	Issue
10-08-81	068316	Classification: torque limiting viscous fan drive (660.67, 661.06, 680.49, 680.59, 680.95, 681.15, 681.21, 692.32)
10-08-81	068356	Classification: Washcloths comprised of velour and terry (366.69)
10-16-81	068360	Classification: men's leather footwear with welt (700.29)
10-06-81	068413	Classification: plastic animal identification ear tags and applicators (666.00, 648.82, 648.85, 745.68)
10-06-81	068551	Classification: double-jointed deck cranes and floating dredgers (664.10)
10-09-81	068564	Classification: wooden Christmas tree ornaments (207.00, 737.22, 772.95)
09-25-81	068571	Classification: chest/shoulder/back protector (735.20)
10-15-81	068643	Classification: cigarette lighters, cigarette lighter cases and display boxes separately packed but imported in the same shipment can not be classified as an entirety
10-08-81	068687	Classification: woman's jacket with zipper closure also featuring a chin strap constituting ornamentation (382.04)
10-08-81	068717	Classification: rechargeable power failure lantern (683.80, 688.45)
10-08-81	068738	Classification: tents (386.09, 735.20)
10-16-81	068815	Classification: pin cushion (386.50)
10-09-81	068826	Classification: rattan furniture (727.11, 727.40)
10-08-81	068841	Classification: frozen coconut cream (183.05)
10-09-81	068888	Classification: men's polyester knit shirts (380.04, 380.81)
10-09-81	068896	Classification: tractor models (664.08, 692.34, 870.40)
10-09-81	068920	Classification: syringe processing machine (662.20, 678.50)
10-08-81	068921	Classification: automobile choke controls (642.20, 680.90, 692.32)
10-08-81	068946	Classification: men's canvas slip-on shoes (700.60)
10-09-81	068955	Classification: fireside broom (222.64, 750.32)
10-08-81	068960	Classification: rubber bath sponges (770.70, 737.40)
10-15-81	069109	Classification: lightning bolt stitching on the pocket of a man's shirt constitutes ornamentation only if readily visible
08-05-81	105216	Vessels: repairs made to a vessel's stern quarters and forward dry cargo hold damaged under stress of weather are not dutiable under 19 U.S.C. 1466
10-15-81	105225	Vessels: cost of ABS surveyor's inspection of vessel damage is not dutiable pursuant to CSD 79-277 and damage repaired by vessel crew is not dutiable pursuant to 19 U.S.C. 1466(d)(2)
10-09-81	105251	Vessels: documentation received before the liquidation of a vessel repair entry will be considered in liquidation and vessel inspection statements submitted several years after the fact are not proof of seaworthiness

Date of decision	File No.	Issue
10-02-81	105276	Vessels: Barges laden with merchandise which are loaded onto a deck barge then transported between U.S. ports constitutes a violation of 46 U.S.C. 883
10-14-81	105292	Vessels: situations constituting a difference between what actually are "towing" or "salvage" services as performed by a tug
10-07-81	105358	Vessels: butane may be transshipped from one foreign flag vessel to another foreign flag vessel on the high seas for transportation to a U.S. port
10-15-81	105371	Vessels: pursuant to 48 U.S.C. 1681, the coastwise laws are not applicable to the transportation of cargo between a U.S. West Coast port and the Trust Territory of the Pacific Islands
10-07-81	542521	Value: design and development of printed material to appear on boxes which is undertaken in the U.S. and provided free of charge to the manufacturer by the importer does not constitute a dutiable assist under the TAA
05-22-81	800586	Classification: anisotropic barium ferrite powder and anisotropic strontium ferrite powder (417.80, 418.94)
08-05-81	800730	Classification: bibulous paper (252.17)
08-18-81	800770	Classification: atactic polypropylene (429.54)
08-05-81	800995	Classification: frozen vegetables and fruits (138.05, 138.42, 137.71, 137.04, 136.97, 146.24, 146.76)
08-13-81	801043	Classification: room deodorizer (460.85)
08-05-81	801052	Classification: fresh and processed taro (136.00)
09-09-81	801117	Classification: steel wire nursery baskets (666.00)
08-11-81	801125	Classification: salted fried corn kernels (183.05)
08-11-81	801146	Classification: bottled mineral water (166.10)
09-09-81	801174	Classification: nylon/leather athletic shoes (700.35, 700.45, 700.95, 700.67)
09-03-81	801209	Classification: POAST Active Ingredient and POAST concentrate (425.52, 430.20)
09-08-81	801219	Classification: power transmission chain (652.15)
08-28-81	801220	Classification: baking powder (183.05)
09-08-81	801228	Classification: propeller shaft support bearing units (692.32)
09-01-81	801265	Classification: instant beverage concentrates (160.21, 183.05)
09-08-81	801286	Classification: frog figurine (773.10)
09-03-81	801289	Classification: can carrier device (774.55)
09-09-81	801293	Classification: welding wire produced from cobalt metal (633.00)

United States Court of International Trade

One Federal Plaza
New York, N.Y. 10007

Chief Judge

Edward D. Re

Judges

Paul P. Rao
Morgan Ford
Scovel Richardson
Frederick Landis
James L. Watson
Herbert N. Maletz
Bernard Newman
Nils A. Boe

Senior Judge

Samuel M. Rosenstein

Clerk

Joseph E. Lombardi

Decisions of the United States Court of International Trade

Abstracts

Abstracted Protest Decisions

DEPARTMENT OF THE TREASURY, *September 14, 1981.*

The following abstracts of decisions of the United States Court of International Trade at New York are published for the information and guidance of officers of the customs and others concerned. Although the decisions are not of sufficient general interest to print in full, the summary herein given will be of assistance to customs officials in easily locating cases and tracing important facts.

WILLIAM VON RAAB,
Commissioner of Customs.

DECISION NUMBER	JUDGE & DATE OF DECISION	PLAINTIFF	COURT NO.	ASSESSED	HELD	BASIS	PORT OF ENTRY AND MERCHANDISE
				Par. or Item No. and Rate	Par. or Item No. and Rate		
P81/175	Rao, J. October 22, 1981	Kombi, Ltd	81-1-00062	Item 704.85 32.5% + 25¢ per lb.	Item 734.90 9%	Agreed statement of facts	Seattle Ski glove liners
P81/176	Richardson, J. October 22, 1981	Sortex Co. of North America, Inc.	79-4-00713	Item 712.40 10%	Item 666.25 5.5%	Sortex Company of North America, Inc. v. U.S. (C.D. 4746, aff'd C.A.D. 1221)	Detroit Electronic color sorting machines and parts
P81/177	Maletz, J. October 22, 1981	International Seaway Trading Corp.	69/12449, etc.	Item 700.60 20%	Item 700.70 15%, 13%, 12%, 10%, 9%, or 7.5%	International Seaway Trading Corp. v. U.S. (C.D. 4773)	San Francisco Footwear
P81/178	Maletz, J. October 22, 1981	Jimlar Corporation	68/58936, etc.	Item 700.60 20%	Item 700.70 13%	International Seaway Trading Corp. v. U.S. (C.D. 4773)	New York Footwear

Decisions of the United States Court of International Trade

Abstracts

Abstracted Reappraisement Decisions

DECISION NUMBER	JUDGE & DATE OF DECISION	PLAINTIFF	COURT NO.	BASIS OF VALUATION	HELD VALUE	BASIS	PORT OF ENTRY AND MERCHANDISE
R81/368	Rao, J. October 22, 1981	Brother International Corp.	R62/4237, etc.	Export value	F.o.b. unit invoice prices plus 20% of difference between f.o.b. unit invoice prices and appraised values	Agreed statement of facts	New York Sewing machine heads
R81/369	Rao, J. October 22, 1981	Bruce Duncan Co., Inc., a/c Riecar America Corp.	R60/20892, etc.	Export value	F.o.b. unit invoice prices plus 20% of difference between f.o.b. unit invoice prices and appraised values	Agreed statement of facts	Los Angeles Machines and parts

R81/370	Rao, J. October 22, 1981	Kent International	80-9-01374	Export value	F.o.b. prices set forth in invoices of Willing Industry Co., Ltd.	Agreed statement of facts	New Orleans Bicycles
R81/371	Rao, J. October 22, 1981	Mitsubishi International Corporation	73-2-00393, etc.	American selling price	Appraised values less 23%, per pair	Agreed statement of facts	Houston Footwear
R81/372	Rao, J. October 22, 1981	Mitsubishi International Corporation	74-4-00948, etc.	American selling price	Appraised values less 23%, per pair	Agreed statement of facts	Portland, Oreg. Footwear
R81/373	Rao, J. October 22, 1981	Mitsubishi International Corporation	74-4-01018, etc.	American selling price	Appraised values less 23%, per pair	Agreed statement of facts	Philadelphia Footwear
R81/374	Rao, J. October 22, 1981	Mitsubishi International Corporation	75-1-00109, etc.	American selling price	Appraised values less 23%, per pair	Agreed statement of facts	New York Footwear
R81/375	Rao, J. October 22, 1981	Mitsubishi International Corporation	75-6-01567, etc.	American selling price	Appraised values less 23%, per pair	Agreed statement of facts	New York Footwear
R81/376	Rao, J. October 22, 1981	Mitsubishi International Corporation	75-8-02142, etc.	American selling price	Appraised values less 23%, per pair	Agreed statement of facts	New Orleans Footwear

Appeals to United States Court of Customs and Patent Appeals

APPEAL 81-24—MONTGOMERY WARD & CO., INC. AND UNITED STATES *v.* ZENITH RADIO CORPORATION—Order Denying Motions for Reconsideration, and, in the Alternative, for a Stay Pending Appeal—TSUS—Appeal From Slip Op. 81-44.

Plaintiff-appellee, an American television manufacturer, filed a motion with the Court to compel defendant-appellant-intervenor to respond to its first interrogatories, and a motion to compel response to its first request for the production of certain documents in the possession of the United States which pertain to the files accumulated pursuant to U.S.C. 1592.

Defendant-appellant-intervenor filed a motion in opposition to plaintiff-appellee's motions, and, in addition, filed another motion to compel plaintiff-appellee to respond to its first interrogatories, and to compel response to its first request for the production of certain documents. Plaintiff-appellee filed its opposition to all of defendant-appellant-intervenor's motions.

Upon consideration of the motions of each of the parties indicated above, the United States Court of International Trade held that defendant-appellant-intervenor shall make available, subject to specified protective provisions, the documents covered by plaintiff-appellee's first request for the production of certain documents.

Appellant, who had previously been granted leave to intervene for the limited purpose of opposing plaintiff-appellee's motion for an order compelling discovery, filed a motion for reconsideration of the order of the Court, and, in the alternative, for a stay of the order pending appeal. This motion, together with a similar motion filed by defendant-appellant-intervenor, was denied.

Based upon the denial of their motions, appellant and defendant-appellant-intervenor, appealed to the United States Court of Customs and Patent Appeals for an emergency stay pursuant to Sections 1514(a) and 2601(a) and (b) and to review the questions involved therein and to grant such relief in the premises as to the Court shall seem just.

APPEAL 81-25—ASG INDUSTRIES, INC. ET AL. *v.* UNITED STATES—American Manufacturers' Action—Float Glass—Bounties or Grants—Countervailing Duties—TSUS—Appeal from Decision and Judgment in Slip Op. 81-34

Pursuant to a remand issued in the matter of *ASG Industries, Inc., et al.* v. *United States*, 67 CCPA—, C.A.D. 1237 (1979), 610 F. 2d 770 (1979), rehearing denied (1980), this case was brought before the United States Court of International Trade.

Defendant-appellee moved to have the case dismissed with a judgment ordering the administrative authority to ascertain, determine, or estimate the net amount of bounty or grants bestowed upon Vereinigt Glaswerke GMBH and Flachglas/delog/detal and levying countervailing duties in such amounts on the production of the manufacturers.

Plaintiffs-appellants opposed the motion, contending that granting the motion would not be in compliance with the remand decision, supra, and moved alternatively to have the matter remanded to the Secretary of Commerce, after giving plaintiffs-appellants an opportunity to be heard, to ascertain the net amount of bounties or grants and have the findings submitted to the Court within 120 days, so that the Court could make its determination or have a hearing on the amount of the bounties or grants.

The United States Court of International Trade, after an oral argument held on March 18, 1981, decided in favor of defendant-appellee.

Plaintiffs-appellants, being dissatisfied with the decision and judgment of the United States Court of International Trade, appealed to the United States Court of Customs and Patent Appeals and respectfully prays, pursuant to Sections 1541(a) and 2601(a) and (b), Title 28, United States Code, to review the questions involved therein and to grant such relief in the premises as to the Court shall seem just.

APPEAL 81-26—C. J. TOWER & SONS OF BUFFALO *v.* UNITED STATES—Mechanical Equipment—Valves—Automatic Livestock Waterers or Animal Nipple Drinkers—TSUS—Appeal from Decision and Judgment in Slip Op. 81-35

The merchandise in this case was imported from Canada. Upon entry into the United States, it was classified by the customs officials as valves or similar devices used to control the flow of liquids and, as such, assessed duty thereon under TSUS Item 680.22 at 11 per centum ad valorem.

Plaintiff-appellant claims that the imported merchandise is more than valves because it contains the three specific elements of waterers; namely, the flow restrictor, the filter screen, and the watering tube.

Accordingly, plaintiff-appellant contends that the merchandise should be properly classified as an agricultural implement, and that a lower rate of duty should be assessed thereon as provided under TSUS Item 666.00.

Based upon the evidence before it, the United States Court of International Trade has held that the imported merchandise is not an agricultural implement as claimed by plaintiff-appellant. It falls under the provision applicable to valves or similar merchandise and is properly dutiable under TSUS Item 680.22 at 11 per centum ad valorem.

Plaintiff-appellant, being dissatisfied with the decision and judgment of the United States Court of International Trade, appeals to the United States Court of Customs and Patent Appeals and respectfully prays, pursuant to Sections 1541(a) and 2601(a) and (b), Title 28, United States Code, to review the questions involved therein and to grant such relief in the premises as to the Court shall seem just.

APPEAL 81–27—GENENDER WHOLESALE *v* UNITED STATES—Watches and Clocks—Watch Cases and Parts—Surface Layer of Gold—TSUS—Appeal From Decision and Judgment in Slip Op. 81–40

The merchandise in this case consists of watch cases imported from Hong Kong and entered at the Port of Chicago, Illinois, in September 1974. Upon entry, the merchandise was liquidated and classified as watch cases "containing gold," and duty was assessed by the customs officials at 20¢ each plus 15% ad valorem under TSUS Item 720.24, Schedule 7, Part 2, Subpart E.

In protesting the classification, plaintiff appellant claims the merchandise to be properly classified under TSUS Item 720.28 with duty assessed at 5¢ each plus 10% ad valorem. Plaintiff-appellant also claims that General Headnote 9(f)(iv) precludes the classification of the merchandise as articles "containing gold."

In holding for defendant-appellee, the United States Court of International Trade decided that from the evidence presented plaintiff-appellant has failed to prove that the liquidated classification was in error, and to establish the correctness of its claimed classification.

In its appeal, plaintiff-appellant claims that The United States Court of International Trade erred in not finding and holding that the subject merchandise should be classified as watch cases and parts thereof: other, under Item 720.28, Tariff Schedules of the United States (TSUS) as amended by T.D. 68–9; in finding and holding that the subject merchandise should be classified as watch cases and parts thereof . . . containing gold, under TSUS Item 720.24, 20 cents each plus 15% ad valorem; in finding and holding that the subject mer-

chandise contains a significant quantity of gold; in finding and holding that the subject merchandise contains gold, at all, within the intendment of General Headnote 9(f)(iv); in not finding and holding that General Headnote 9(f)(iv) precludes classification of the subject merchandise under TSUS Item 720.24; in finding and holding that the cost of the application process, in applying gold to the subject merchandise is part of the value of the gold present; in not finding and holding that the presence of gold in the subject merchandise must be viewed quantitatively in an isolated amount; in finding and holding that the presence of gold in the subject merchandise constitutes a commercially significant amount; in not finding and holding that the underlying nickel layer on the subject merchandise is the portion which inhibits tarnishing and rust; in finding and holding that gold inhibits tarnishing and rust in the subject merchandise; in using cost standards of the U.S. costume jewelry industry in determining the significance of any presence of gold in the subject merchandise which was imported from Hong Kong; in failing to find and hold that the costs in applying gold to the subject merchandise would be substantially the same as the costs in applying chrome to the surface of the subject merchandise; in finding and holding that precisely two milligrams of gold are present in the subject watch cases; and in not finding and holding that the quantity of gold present on the subject watch cases could not be estimated, and could not be ascertained with specificity.

APPEAL 81-28—C. ITOH & CO. OF AMERICA, INC. *v.* UNITED STATES—Fabric of Man-Made Fibers—Man-Made Plastic Leather (Suede)—Polyester Fibers—Coated—Polyurethane Solution and Other Chemicals—TSUS—Appeal From Decision and Judgment in Slip Op. 81-29

The merchandise in this case was manufactured in Japan by Toray Industries, Inc. and exported to the United States on October 20, 1975. Upon entry at the Port of Wilmington, Delaware, on November 7, 1975, the merchandise was classified by the customs officials under that provision of the Tariff Schedules that provides for "Webs, wadding, batting and nonwoven fabrics, including felt and bonded fabrics, and articles not specially provided for of any one or combination of these products, all of the foregoing of textile materials, whether or not coated or filled; of man-made fibers," TSUS Item 355.25, and duty was assessed thereon at 12¢ per lb. plus 15% ad valorem.

Plaintiff-appellant claims that the merchandise is classifiable either under TSUS Item 774.60, as "Articles not specially provided for, of rubber or plastics," with duty assessed thereon at 8.5% ad

valorem, or alternatively, under TSUS Item 359.60, as "Textile fabrics, including laminated fabrics, not specially provided for," with duty assessed thereon at 8.5% ad valorem.

Based upon the testimony given at the trial, and the evidence before it, the United States Court of International Trade held that the merchandise is a nonwoven fabric of man-made fibers for the purposes of the tariff classification, and the presumptively correct classification under TSUS Item 355.25 should be confirmed as correct. The court ordered that plaintiff-appellant's claim under TSUS Item 774.60, and its alternative claim under TSUS Item 359.60, be dismissed.

Plaintiff-appellant, being dissatisfied with the decision and judgment rendered in its case, appealed to the United States Court of Customs and Patent Appeals, pursuant to Sections 1541(a) and 2601(a), Title 28, United States Code, to review the questions involved therein and to grant such relief in the premises as to the court shall seem just.

International Trade Commission Notices

Investigations by the U.S. International Trade Commission

DEPARTMENT OF THE TREASURY, NOVEMBER 5, 1981

The appended notices relating to investigations by the U.S. International Trade Commission are published for the information of Customs officers and others concerned.

WILLIAM VON RAAB.
Commissioner of Customs.

In the Matter of CERTAIN MULTI-SEQUENTIAL CODED RADIO PAGERS	Investigation No. 337-TA-109

NOTICE OF INVESTIGATION

AGENCY: U.S. International Trade Commission.

ACTION: Institution of investigation pursuant to 19 U.S.C. 1337.

SUMMARY: Notice is hereby given that a complaint was filed with the U.S. International Trade Commission on September 15, 1981, under section 337 of the Tariff Act of 1930 (19 U.S.C. 1337), on behalf of Motorola, Inc., 1303 East Algonquin Road, Schaumburg, Illinois 60196. An amended complaint was filed on October 2, 1981. The amended complaint (hereinafter the complaint) alleges unfair methods of competition and unfair acts in the importation of certain multi-sequential coded radio pagers into the United States, or in their sale, by reason of the alleged infringement by said radio pagers of claims 1, 2, 9, 13, 17, 21, 23, and 26 of U.S. Letters Patent 4,181,-893 ("'893 patent") and by reason of the alleged contributory and induced infringement by said radio pagers of said claims of the '893 patent. The complaint further alleges that the effect or tendency of the unfair methods of competition and unfair acts is to destroy or substantially injure an industry, efficiently and economically operated, in the United States.

The complainant requests that, during the pendency of the investigation, the Commission issue both a temporary exclusion order, prohibiting importation of said articles into the United States except under bond, and a temporary cease and desist order and, after a full investigation, issue both an exclusion order, prohibiting importation of said articles into the United States for the life of the patent in issue, and a cease and desist order.

AUTHORITY: The authority for institution of this investigation is contained in section 337 of the Tariff Act of 1930 and in section 210.12 of the Commission's Rules of Practice and Procedure.

SCOPE OF THE INVESTIGATION: Having considered the complaint, the U.S. International Trade Commission, on October 15, 1981, ordered that—

(1) Pursuant to subsection (b) of section 337 of the Tariff Act of 1930, an investigation be instituted to determine whether there is reason to believe that there is a violation and whether there is a violation of subsection (a) of section 337 in the unauthorized importation of certain multi-sequential coded radio pagers into the United States, or in their sale, by reason of the alleged infringement by said radio pagers of claims 1, 2, 9, 13, 17, 21 23, or 26 of U.S. Letters Patent 4,181,893, or by reason of the alleged contributory and induced infringement by said radio pagers of said claims of the '893 patent, the effect or tendency of which is to destroy or substantially injure an industry, efficiently and economically operated, in the United States;

(2) For the purpose of this investigation so instituted, the following are hereby named as parties upon which this notice of investigation shall be served:

(a) The complainant is—

Motorola, Inc.
1303 East Algonquin Road
Schaumburg, Ill. 60196

(b) The respondents are the following companies alleged to be in violation of section 337, and are the parties upon which the complaint is to be served:

Nippon Electric Co., Ltd.
33–1, Shiba Gochome, Minato-Ku
Tokyo, Japan
Nippon Electrical Co. of America, Inc.
532 Broadhollow Road
Melville, NY 11747

National Marketing, Inc.
11300 Rodney Parham (Suite 280)
Little Rock, AR 72212

(c) M. Brooke Murdock and John Milo Bryant, Unfair Import Investigations Division, U.S. International Trade Commission, 701 E Street NW., Washington, D.C. 20436, shall be the Commission investigative attorneys, a party to this investigation; and

(3) For the investigation so instituted, Donald K. Duvall, Chief Administrative Law Judge, U.S. International Trade Commission, 701 E Street NW., Washington, D.C. 20436, shall designate the presiding officer.

Responses must be submitted by the named respondents in accordance with section 210.21 of the Commission's Rules of Practice and Procedure (19 CFR 210.21). Pursuant to sections 201.16(d) and 210.21(a) of the rules, such responses will be considered by the Commission if received not later than 20 days after the date of service of the complaint. Extensions of time for submitting a response will not be granted unless good and sufficient cause therefor is shown.

Failure of a respondent to file a timely response to each allegation in the complaint and in this notice may be deemed to constitute a waiver of the right to appear and contest the allegations of the complaint and this notice, and to authorize the presiding officer and the Commission, without further notice to the respondent, to find the facts to be as alleged in the complaint and this notice and to enter both a recommended determination and a final determination containing such findings.

The complaint, except for any confidential information contained therein, is available for inspection during official working hours (8:45 a.m. to 5:15 p.m.) in the Office of the Secretary, U.S. International Trade Commission, 701 E Street NW., Washington, D.C. 20436, telephone 202–523–0161.

FOR FURTHER INFORMATION CONTACT: M. Brooke Murdock or John Milo Bryant, Unfair Import Investigations Division, U.S. International Trade Commission, telephone 202–523–0115 or 202–523–0419, respectively.

By order of the Commission.

Issued: October 28, 1981.

KENNETH R. MASON,
Secretary.

Investigation No. TA–406–7

UNREFINED MONTAN WAX FROM EAST GERMANY

AGENCY: United States International Trade Commission.

ACTION: Institution of an investigation under section 406(a) of the Trade Act of 1974 (19 U.S.C. § 2436(a)) and scheduling of a hearing to be held in connection with the investigation.

SUMMARY: Following receipt on October 13, 1981, of a petition filed by American Lignite Products Co. (ALPCO) of Ione, Calif., the United States International Trade Commission hereby gives notice of the institution of investigation No. TA–406–7 under section 406(a) of the Trade Act of 1974 to determine, with respect to imports of unrefined montan wax, provided for in item 494.20 of the Tariff Schedules of the United States, which is the product of East Germany, whether market disruption exists with respect to an article produced by a domestic industry. Section 406(e)(2) of the Trade Act defines market disruption to exist within a domestic industry whenever "imports of an article, like or directly competitive with an article produced by such domestic industry, are increasing rapidly, either absolutely or relatively, so as to be a significant cause of material injury, or threat thereof, to such domestic industry," ALPCO's petition requests that a quota be placed on imports of unrefined montan wax from East Germany equal to the amount of such imports in 1978 (3.7 million pounds) and that an additional import tariff of 15 cents per pound be imposed on such imports.

The Commission must report its determination in this investigation to the President not later than 3 months after the petition was filed, or by January 13, 1981 (19 CFR § 206.15).

EFFECTIVE DATE: October 13, 1981.

FOR FURTHER INFORMATION CONTACT: Judith C. Zeck, Office of Investigations, U.S. International Trade Commission; telephone 202–523–0339.

SUPPLEMENTARY INFORMATION: *Public hearing.*—The Commission will hold a public hearing in connection with this investigation beginning at 10:00 a.m., e.s.t., on Wednesday, December 2, 1981, in the Hearing Room, United States International Trade Commission Building, 701 E Street, NW., Washington, D.C. All parties will be given an opportunity to be present, to produce evidence, and to be heard at the hearing. Requests to appear at the hearing should be filed in writing with the Secretary to the Commission not later than the close of business (5:15 p.m., e.s.t.) on Tuesday, November 17, 1981.

Prehearing procedure.—To facilitate the hearing process it is requested that persons wishing to appear at the hearing submit prehearing briefs enumerating and discussing the issues which they wish to raise at the hearing. Nineteen copies of such prehearing briefs should be submitted to the Secretary of the Commission no later than

the close of business on Tuesday, November 23, 1981. Copies of prehearing briefs submitted will be made available for public inspection in the Office of the Secretary. While submission of prehearing briefs does not prohibit submission of prepared statements in accordance with 201.12(d) of the Commission's rules of practice and procedure (19 CFR 201.12(d)), it would be unnecessary to submit such a statement if a prehearing brief is submitted instead. Oral presentations should, to the extent possible, be limited to issues raised in the prehearing briefs. All persons desiring to appear at the hearing and make oral presentations should attend a prehearing conference to be held at 10:00 a.m., e.s.t., on November 18, 1981, in Room 117 of the U.S. International Trade Commission Building.

Inspection of the petition.—A copy of the petition in this case is available for public inspection at the Office of the Secretary, U.S. International Trade Commission.

For further information concerning the conduct of the investigation, hearing procedures, and rules of general application, consult the Commission's Rules of Practice and Procedure, part 201, subparts A through E (19 CFR § 201).

This notice is published pursuant to section 201.10 of the Commission's Rules of Practice and Procedure (19 CFR § 201.10).

By order of the Commission.

Issued: October 28, 1981.

KENNETH R. MASON,
Secretary.

Index

U.S. Customs Service

	T.D. No.
Treasury decisions:	
Carrier bonds	81-278
Change of hours, Andrade and Tecate, Ca	81-279

DEPARTMENT OF THE TREASURY
U.S. CUSTOMS SERVICE
WASHINGTON, D.C. 20229

OFFICIAL BUSINESS
PENALTY FOR PRIVATE USE, $300

POSTAGE AND FEES PAID
DEPARTMENT OF THE TREASURY (CUSTOMS)
(TREAS. 552)

U.S. GOVERNMENT PRINTING OFFICE: 1981

15/47

Customs Bulletin

Regulations, Rulings, Decisions, and Notices concerning Customs and related matters

and Decisions

of the United States Court of Customs and Patent Appeals and the United States Court of International Trade

Vol. 15 NOVEMBER 25, 1981 No. 47

NEWARK PUBLIC LIBRARY

DEC 1 1 1981

U. S. GOVT. PUBS.
DEPOSITORY 376

This issue contains

T.D. 81-280 Through T.D. 81-282
General Notice
Slip Op. 81-94 Through 81-99
Protest Abstracts P81/179 Through P81/181
Reap. Abstracts R81/377 Through R81/383
International Trade Commission Notices

THE DEPARTMENT OF THE TREASURY
U.S. Customs Service

T1. 11/3:

NOTICE

The abstracts, rulings, and notices which are issued weekly by the U.S. Customs Service are subject to correction for typographical or other printing errors. Users may notify the U.S. Customs Service, Logistics Management Division, Washington, D.C. 20229, of any such errors in order that corrections may be made before the bound volumes are published.

For sale by the Superintendent of Documents, U.S. Government Printing Office, Washington, D.C. 20402. Price: $2.25 (single copy domestic); $2.85 (single copy foreign). Subscription price: $85.00 a year domestic; $106.25 a year foreign.

U.S. Customs Service

Treasury Decisions

(T.D. 81-280)

Bonds

Approval and discontinuance of Carrier's Bonds, Customs Form 3587

Bonds of carriers for the transportation of bonded merchandise have been approved or discontinued as shown below. The symbol "D" indicates that the bond previously outstanding has been discontinued on the month, day, and year represented by the figures which follow. "PB" refers to a previous bond, dated as represented by figures in parentheses immediately following, which has been discontinued. If the previous bond was in the name of a different company or if the surety was different, the information is shown in a footnote at the end of the list.

Dated: November 5, 1981.

Name of principal and surety	Date of bond	Date of approval	Filed with district director/area director/amount
Anders Williams & Co., Inc., P.O. Box 1524, Wilmington, NC; motor carrier; Ins. Co. of North America	Sept. 30, 1981	Oct. 5, 1981	Wilmington, NC $25,000
Anderson Motor Service, Inc., 1516 North 14th St., St. Louis, MO; motor carrier; United States Fidelity & Guaranty Co. D 11/16/81	Feb. 16, 1959	Feb. 17, 1959	St. Louis, MO $25,000
Arnold Bros. Transport LTD, Winnipeg, Manitoba, Canada; motor carrier; Transamerica Ins. Co. (PB 12/26/73) D 10/6/81 [1]	Sept. 25, 1981	Oct. 6, 1981	Pembina, ND $25,000
Bo-Mark Transport, Inc., 4884 Old Louisville Rd., Garden City, GA; motor carrier; Aetna Casualty & Surety Co.	Sept. 28, 1981	Oct. 6, 1981	Savannah, GA $25,000
Carolina Freight Carriers Corp., P.O. Box 607, Cherryville, NC; motor carrier; Seaboard Surety Co. (PB 6/15/72) D 9/30/81[2]	Sept. 1, 1981	Oct. 1, 1981	Wilmington, NC $50,000
Coastal Transport & Trading Co., Inc.—(See Refrigerated Transport Co., Inc.)			

Name of principal and surety	Date of bond	Date of approval	Filed with district director/area director/amount
Commercial Carrier Corp., 502 E. Bridgers Ave., Auburndale, FL; motor carrier; Aetna Casualty & Surety Co.	June 23, 1981	Oct. 13, 1981	Tampa, FL $25,000
Easor Express, Inc., Easor Square, Pittsburgh, PA; motor carrier; Union Indemni y Ins. Co. of NY	July 13, 1981	Oct. 8, 1981	Philadelphia, PA $100,000
Henry L. Bridge farmer, Henry Gillard, Cecil L. Belt, dba: H & H Trucking, Box 371, Princeton, TX; motor carrier; Aetna Ins. Co.	Aug. 25, 1981	Oct. 14, 1981	Laredo, TX $25,000
J A T Express, Inc., 4002 Rosewood Ave., Muncie, IN; motor carrier; The American Druggists' Ins. Co.	Aug. 21, 1981	Sept. 29, 1981	Laredo, TX $50,000
R. L. Jeffries Trucking Co., Inc., P.O. Box 3277, 9700 N Highway 57, Evansville, IN; motor carrier; The Ohio Casualty Ins. Co.	Sept. 23, 1981	Oct. 2, 1981	Baltimore, MD $25,000
Porter Trucking Co., Inc., 370 Wampanoag Trail, East Providence, RI; motor carrier; Fidelity & Deposit Co. of MD D 10/8/81	Jan. 15, 1979	Feb. 16, 1979	Providence, RI $25,000
Refrigerated Transport Co., Inc., and Coastal Transport & Trading Co., Inc., a w/o/s/, 3901 Jonesboro Rd., SE, Forest Park, GA; motor carrier; Contin ental Casualty Co. (PB 8/13/80) D 10/5/81[1]	Sept. 21, 1981	Oct. 5, 1981	Savannah, GA $25,000
Reliable Air Freight, Inc., 6100 Stapleton Dr., South, Unit G, Denver, CO; air carrier; Aetna Casualty & Surety Co.	June 25, 1981	Sept. 4, 1981	El Paso, TX $25,000
Ross Transportation Co., 4220 Almond St., Philadelphia, PA; motor carrier; St. Paul Fire & Marine Ins. Co.	June 22, 1981	Oct. 14, 1981	Philadelphia, PA $50,000
Sharmax Freightlines, Inc., 12645 Midranch Lane, Lakeside, CA; motor carrier; Industrial Indemnity Co.	Oct. 1, 1981	Oct. 13, 1981	San Diego, CA $25,000
Bobby Smith Transport, Inc., P.O. Box 7556, Fort Worth, TX; motor carrier; United States Fire Ins. Co. D 10/8/81	Jan. 22, 1980	Feb. 2, 1980	Laredo, TX $25,000
Smith Transport (US) Ltd., 150 Commissioners St., Toronto, Ontario, Canada; motor carrier; Transamerica Ins. Co. (PB 10/9/75) D 10/9/81	Feb. 18, 1981	Oct. 9, 1981	Ogdensburg, NY $200,000
Three Way Corp., 1120 Karlstad Dr., Sunnyvale, CA; motor carrier; American Motorists Ins. Co.	Sept. 2, 1981	Oct. 6, 1981	San Francisco, CA $50,000
Tiger InterModal, Inc., 1888 Century Park East, Los Angeles, CA; motor carrier; St. Paul Fire & Marine Ins. Co.	July 9, 1981	Sept. 28, 1981	Los Angeles, CA $50,000
Trans Freight Lines, Inc., One Harmon Plaza, Secaucus, NJ; water carrier; Ins. Co. of North America	Sept. 29, 1981	Oct. 6, 1981	Charleston, SC $50,000

Name of principal and surety	Date of bond	Date of approval	Filed with district director/area director/amount
Transway, Inc., 235 S. Genois St., New Orleans, LA; motor carrier; Fidelity & Deposit Co. of MD D 10/10/81	Aug. 26, 1968	Oct. 8, 1968	New Orleans, LA $25,000
Union Transfer Co. of Allentown, Inc., Rt. 130 and Prince Ave., Pennsauken, NJ; motor carrier; National Grange Mutual Ins. Co. D 9/2/81	Aug. 10, 1977	Aug. 16, 1977	Philadelphia, PA $50,000
Wilmar Trucking, Inc., P.O. Box 369, Oaks, PA; motor carrier; Centennial Ins. Co. D 11/5/81	Sept. 26, 1977	April 5, 1979	Philadelphia, PA $50,000
Winchester Corp., 3400 McIntosh Rd., FTZ #25, Port Everglades, FL; motor carrier; Peerless Ins. Co.	Aug. 11, 1981	Oct. 6, 1981	Miami, FL $25,000

[1] Surety is St. Paul Fire & Marine Ins. Co.
[2] Surety is The Home Indemnity Co., Inc.
[3] Surety is The Aetna Casualty & Surety Co. of Ill.

BON-3-03

MARILYN G. MORRISON,
Director,
Carriers, Drawback and Bonds Division.

(T.D. 81-281)

Synopses of drawback decisions

The following are synopses of drawback rates issued July 6, 1981, to August 20, 1981, inclusive, pursuant to sections 22.1 through 22.5, inclusive, Customs Regulations.

In the synopses below are listed for each drawback rate approved under 19 U.S.C. 1313(b), the name of the company, the specified articles on which drawback is authorized, the merchandise which will be used to manufacture or produce these articles, the factories where the work will be accomplished, the date the statement was signed, the basis for determining payment, the Regional Commissioner to whom the rate was forwarded or issued by, and the date on which it was forwarded or issued.

Dated: November 5, 1981.
File: DRA-1-09
213642

MARILYN G. MORRISON,
Director,
Carriers, Drawback and Bonds Division.

(A) Company: Alcan Aluminum Corp.
Articles: Aluminum and aluminum alloy cable.
Merchandise: Aluminum and aluminum alloy rod.
Factories: Bay St. Louis, MS; Sedalia, MO; Tucker, GA; Williamsport, PA.
Statement signed: May 5, 1981.
Basis of claim: Appearing in.
Rate forwarded to Regional Commissioner of Customs: Boston, July 16, 1981.

(B) Company: AMAX Tungsten, Division of AMAX Inc.
Articles: Ammonium paratungstate; tungstic oxide.
Merchandise: Tungsten concentrates (natural and synthetic).
Factory: Ft. Madison, IA.
Statement signed: May 21, 1981.
Basis of claim: Appearing in.
Rate forwarded to Regional Commissioner of Customs: New York, July 23, 1981.

(C) Company: American Microsystems, Inc.
Articles: Finished semiconductor devices.
Merchandise: Unfinished semiconductor assemblies.
Factories: Santa Clara, CA; Pocatello, ID.
Statement signed: April 15, 1981.
Basis of claim: Appearing in.
Rate forwarded to Regional Commissioner of Customs: San Francisco, August 6, 1981.

(D) Company: Amoco Chemicals Corp.
Articles: Terephthalic acid; purified terephthalic acid; isophthalic acid.
Merchandise: Various class 16 petrochemical products as listed in manufacturer's statement.
Factories: Decatur, AL; Joliet, IL; Mount Pleasant, SC.
Statement signed: March 25, 1981.
Basis of claim: Appearing in.
Rate forwarded to Regional Commissioner of Customs: Chicago, July 14, 1981.

(E) Company: Beatrice Foods Co., Inc.; Dri-Print Foils Div.
Articles: Hot stamping foils.
Merchandise: Polyester film.
Factory: Rahway, NJ.
Statement signed: June 6, 1981.

Basis of claim: Appearing in, plus an allowance for the percentage of waste incurred in the month of manufacture of the exported articles.
Rate forwarded to Regional Commissioner of Customs: New York, July 30, 1981.

(F) Company: Bossert Manufacturing Corp.
Articles: Motor vehicle parts, sub-assemblies, assemblies, and other parts.
Merchandise: Hot and cold rolled steel sheet, strip and blanks; hot rolled steel plate.
Factory: Utica, NY.
Statement signed: April 9, 1981.
Basis of claim: Appearing in.
Rate forwarded to Regional Commissioner of Customs: New York, July 23, 1981.

(G) Company: Diana Fruit Preserving Co., Inc.
Articles: Maraschino cherries; glace cherries.
Merchandise: Liquid refined sugar.
Factory: Santa Clara, CA.
Statement signed: May 26, 1981.
Basis of claim: Appearing in.
Rate forwarded to Regional Commissioner of Customs: San Francisco, August 11, 1981.

(H) Company: The Dow Chemical Co.
Articles: Electrolytic chlorination cells and parts.
Merchandise: Titanium plate.
Factory: Russellville, AR.
Statement signed: March 31, 1981.
Basis of claim: Appearing in.
Rate forwarded to Regional Commissioner of Customs: Chicago, July 14, 1981.

(I) Company: Eastman Kodak Co.
Articles: Photographic chemicals (couplers C–16 and 114–BR).
Merchandise: 1-hydroxy-2-naphthoic acid; phosphorus oxychloride; N, N-dimethylformamide; diethyl oxalate.
Factories: Kingsport, TN; Batesville, AR.
Statement signed: May 8, 1981.
Basis of claim: Used in.
Rate forwarded to Regional Commissioner of Customs: Baltimore, July 6, 1981.
Revokes: T.D. 80–62–J.

(J) Company: Eaton Corp.—Axle Div.
Articles: Truck axle finished components, truck axle finished sub-assemblies, truck axle service kits, and truck axle assemblies.
Merchandise: Rough casting, rough forging, cast steel housing, semi-finished forging, finished machined cast steel housing, finished machined reinforcing ring, finished machined fabricated housing, and semi-finished cast steel housing.
Factories: Cleveland, OH; Humboldt, TN; Glasgow and Henderson, KY.
Statement signed: June 23, 1981.
Basis of claim: Used in and used in less valuable waste.
Rate forwarded to Regional Commissioner of Customs: Baltimore, August 6, 1981.

(K) Company: Glen Raven Mills, Inc.
Articles: Multilobal bright textured polyester yarn.
Merchandise: Multilobal bright non-textured polyester yarn.
Factories: Newland and Altamahaw, NC.
Statement signed: June 4, 1981.
Basis of claim: Used in.
Rate forwarded to Regional Commissioner of Customs: Miami, July 16, 1981.
Revokes: T.D. 80-192-K.

(L) Company: The B. F. Goodrich Co.
Articles: Tires (rubber, pneumatic); nylon tire cord fabric.
Merchandise: Nylon yarn.
Factories: Tuscaloosa, AL; Akron, OH; Miami, OK; Oaks, PA; Thomaston, GA; Woodburn, IN.
Statement signed: April 7, 1981.
Basis of claim: Appearing in.
Rate forwarded to Regional Commissioners of Customs: Chicago, Miami, July 17, 1981.

(M) Company: Intersil, Inc.
Articles: Fabricated semiconductor die in wafer form.
Merchandise: Silicon wafers.
Factories: Cupertino, Santa Clara and Sunnyvale, CA.
Statement signed: December 15, 1980.
Basis of claim: Used in.
Rate forwarded to Regional Commissioner of Customs: San Francisco, July 30, 1981.

(N) Company: McGraw-Edision Co., Campbell Chain Div.
Articles: Tire chains, commercial, industrial, and agricultural chains and accessories.
Merchandise: Hot rolled steel rods and bars, chain accessories, commercial steel chain, and steel tire chain.
Factories: York, PA; Union City, CA; Cortland and Maspeth, NY.
Statement signed: July 1, 1981.
Basis of claim: Used in, less valuable waste.
Rate issued by Regional Commissioner of Customs in accordance with section 22.4(o)(2): Baltimore, July 15, 1981.
Revokes: T.D. 74-95-F to cover change in name from Campbell Chain Co.

(O) Company: Mars, Inc.
Articles: Confectionery products.
Merchandise: Extra fine hard refined sugar, hard refined fruit sugar, sanding hard refined sugar, hard refined confectionery sugar, liquid sucrose sugar, liquid invert sugar, sweet condensed whole milk, high butterfat sweet condensed whole milk.
Factories: Hackettstown, NJ; Chicago, IL; Elizabethtown, PA; Cleveland, TN; Waco, TX; and Albany, GA.
Statement signed: March 2, 1981.
Basis of claim: Used in.
Rate forwarded to Regional Commissioner of Customs: New York, August 4, 1981.
Revokes: T.D. 55461-B as amended by T.D. 55622-A and T.D. 66-54-B.

(P) Company: Mostek Corp.
Articles: Computer circuit boards, sub-assemblies, computers and computer peripheral equipment.
Merchandise: Semiconductor devices.
Factories: Carrollton, TX; and Colorado Springs, CO.
Statement signed: May 29, 1981.
Basis of claim: Appearing in.
Rate forwarded to Regional Commissioner of Customs: San Francisco, August 20, 1981.

(Q) Company: NCR Corp.
Articles: Commercial teller terminal.
Merchandise: Drum printer; Keyboard; power supply, DC.
Factory: Dayton, OH.
Statement signed: April 10, 1981.
Basis of claim: Appearing in.
Rate forwarded to Regional Commissioner of Customs: San Francisco, July 24, 1981.

356-511 0 - 81 - 2

(R) Company: Papetti's Hygrade Egg Products, Inc.
Articles: Frozen egg white, frozen egg yolk, frozen whole eggs.
Merchandise: Shell (whole) chicken eggs.
Factory: Elizabeth, NJ.
Statement signed: June 3, 1981.
Basis of claim: Used in, with distribution to the products obtained in accordance with their relative value at the time of separation.
Rate forwarded to Regional Commissioner of Customs: New York, July 16, 1981.

(S) Company: Pfizer, Inc.
Articles: 2-quinoxaline carboxaldehyde dimethyl acetal 1,4-dioxide (DQX).
Merchandise: Methyl glyoxal dimethyl acetal (MGA).
Factory: Groton, CT.
Statement signed: April 9, 1981.
Basis of claim: Used in.
Rate forwarded to Regional Commissioner of Customs: New York, July 14, 1981.

(T) Company: Pfizer, Inc.
Articles: Ground calcium metal.
Merchandise: Calcium metal shavings.
Factory: Canaan, CT.
Statement signed: November 17, 1980.
Basis of claim: Appearing in.
Rate forwarded to Regional Commissioner of Customs: New York, August 20, 1981.

(U) Company: Rossville Yarn Processing Co.
Articles: Upholstery fabric.
Merchandise: Nylon and olefin yarns.
Factory: Rossville, GA.
Statement signed: May 21, 1981.
Basis of claim: Appearing in.
Rate forwarded to Regional Commissioner of Customs: New Orleans, July 16, 1981.

(V) Company: SK & F Lab Co., Chemical Div.
Articles: Cimetidine Base (N-cyano-N′-methyl-N″-[2-(4-methyl-5-imidazolylmethyl) thioethyl] guanidine).
Merchandise: 4(5)-hydroxymethyl-5(4)-methylimidazole hydrochloride (CET/Alcohol).
Factory: Guayama, PR.

Statement signed: August 6, 1980.
Basis of claim: Used in.
Rate forwarded to Regional Commissioner of Customs: Miami, July 24, 1981.

(W) Company: Signode Corp.
Articles: Strapping.
Merchandise: Hot rolled medium and high carbon steel sheet in coils.
Factories: Pittsburg, CA; Bridgeview, IL; Sparrows Point, MD; Weirton, WV.
Statement signed: January 21, 1981.
Basis of claim: Appearing in.
Rate forwarded to Regional Commissioner of Customs: Chicago, August 20, 1981.

(X) Company: SinterMet, Inc.
Articles: Mill rolls and industrial knives.
Merchandise: Blended/graded tungsten carbide powder.
Factory: Kittanning, PA.
Statement signed: April 4, 1981.
Basis of claim: Appearing in.
Rate forwarded to Regional Commissioner of Customs: New York, August 20, 1981.

(Y) Company: Uniroyal, Inc.
Articles: Omite 30W; Omite 6E; Omite 68E; Comite.
Merchandise: Omite technical.
Factories: Through its agents operating under T.D.'s 55207(1) and/or 55207(2).
Statement signed: November 24, 1980.
Basis of claim: Used in.
Rate forwarded to Regional Commissioner of Customs: New York, August 11, 1981.

(Z) Company: Westvaco Corp.
Articles: Refined tall oil fatty acids, rosins, distilled tall oil and related tall oil fatty acids.
Merchandise: Crude tall oil.
Factories: Charleston Heights, SC; De Ridder, LA.
Statement signed: March 12, 1981.
Basis of claim: Used in, with distribution to the products obtained in accordance with their relative value at the time of separation.
Rate issued by Regional Commissioner of Customs in accordance with section 22.4(o)(2): New York, July 20, 1981.

Revokes: T.D. 80-280-Z to cover a change in name from Westvaco Worldwide Corp.

(T.D. 81-282)

Exclusion of Certain Costs Incurred in the United States From Direct Costs of Processing Operations Under the Generalized System of Preferences

AGENCY: U.S. Customs Service, Department of the Treasury.

ACTION: Interpretative Rule.

SUMMARY: By a notice published in the Federal Register, comments were requested on whether certain costs incurred in the United States, now excluded from the appraised value of imported merchandise, should continue to be regarded by Customs as "direct costs of processing operations" under section 10.178(a), Customs Regulations, in determining the eligibility of an article for duty-free treatment under the Generalized System of Preferences ("GSP"). Customs has reviewed and analyzed the comments received in response to the notice and determined that if the costs incurred in the United States do not form part of the appraised value of the imported merchandise under section 402 of the Tariff Act of 1930, as amended by the Trade Agreements Act of 1979, then such costs do not form part of the "direct costs of processing operations" for the purposes of GSP.

DATE: This ruling shall be effective as to merchandise entered, or withdrawn from warehouse, for consumption on or after (90 days after publication in the Federal Register).

FOR FURTHER INFORMATION CONTACT: Thomas L. Lobred, Classification and Value Division, U.S. Customs Service, 1301 Constitution Avenue, NW., Washington, D.C. 20229 (202-566-2938).

SUPPLEMENTARY INFORMATION:

BACKGROUND

In accordance with General Headnote 3(C)(ii), Tariff Schedules of the United States (TSUS) (19 U.S.C. 1202), and section 10.176(a), Customs Regulations (19 CFR 10.176(a)), an article which is the growth, product, manufacture, or assembly of a beneficiary developing country ("BDC") and which is imported into the customs territory of the United States directly from a BDC, may be eligible for duty-free treatment under the Generalized System of Preferences ("GSP"). To be eligible for duty-free treatment, the sum of the cost of materials produced in the BDC plus the direct costs of processing operations

performed in the BDC must not be less than 35 percent of the appraised value of the article at the time of its entry into the customs territory.

Section 10.178(a), Customs Regulations (19 CFR 10.178(a)), defines "direct costs of processing operations" as including, among other things, research, development, design, engineering, and blueprint costs insofar as they are allocable to the specific merchandise under consideration. In interpreting this regulation, Customs has ruled that research and development costs incurred in the United States are considered direct costs of processing operations, provided the research and development relates to the specific merchandise under consideration.

Section 201, Trade Agreements Act of 1979 (Pub. L. 96–39, 93 Stat. 194), amended section 402, Tariff Act of 1930, in part, to specifically exclude from appraised value charges for research and development ("R&D") in the form of engineering development, artwork, design work, and plans and sketches necessary for the production of imported merchandise if undertaken in the United States.

In view of this amendment, a notice was published in the Federal Register on December 18, 1980 (45 FR 83260), requesting public comments on whether these research and development ("R&D") costs incurred in the United States should continue to be regarded as "direct costs of processing operations" under section 10.178(a), Customs Regulations, in determining the eligibility of an article for duty-free treatment under GSP.

DISCUSSION OF COMMENTS

In response to the notice, 14 comments were received. Of these, 8 were in favor of maintaining the present approach of including the previously dutiable R&D costs incurred in the United States as part of the "direct costs of processing operations" under GSP. The other 6 commenters took the position that the changes made by the Trade Agreements Act of 1979 required a change in approach.

The following arguments, listed in no particular order, were made in support of excluding certain costs incurred in the United States from "direct costs of processing" for the purposes of GSP.

1. To do otherwise would be contrary to the primary purpose of GSP which is to encourage economic development in beneficiary countries because it would tend to place indigenous producers at a competitive disadvantage to subsidiaries of United States based multinational corporations and it would encourage the shifting of R&D from the beneficiary country to the United States.

2. United States R&D would be given more weight in determining

GSP eligibility than any cost in the beneficiary country, because costs in the beneficiary country are included in both the costs of processing (dividend) and the Customs value (divisor) while United States R&D would be included only in the dividend.

3. Any product with substantial United States R&D could be eligible even if costs in the beneficiary country were as low as 10%, 5%, or 1% of the Customs value.

4. Because Congress did not make a distinction between the application of "assists" to imports from BDC's and other imports, it was apparent that the definition for "assists" was to apply to all imports regardless of origin. To hold otherwise would be inappropriate.

5. Because it is quite difficult to assign a dollar value to some of the direct and indirect costs which go into developing an item, these costs should be excluded from appraised value.

6. This approach is easier for Customs to administer in that a dual system would not be created.

7. The inclusion of "assists" which do not form part of appraised value would be contrary to the Multilateral Trade Negotiations ("MTN") Agreements on Customs Valuation, and other developed nations have not adopted this concept of "assists."

8. To do otherwise would be contrary to the provisions of the Trade Act of 1974, as well as the Trade Agreements Act of 1979.

The following arguments, also listed in no particular order, were made in support of including certain costs incurred in the United States in "direct costs of processing" for the purposes of GSP.

1. Duty savings can be passed through to the American consumer.

2. Another anomalous situation would be created in that domestic United States engineering, development, and design work would no longer qualify while work performed abroad, even if performed in another highly developed country, would qualify. This would have the effect of creating an incentive for United States importers to have development and design work performed outside of the United States in order to have charges for such work includable as local content when attempting to qualify for GSP treatment.

3. The effects of a decision to cease treating the cost of those "assists" as direct costs of processing operations could be avoided by importers simply selling the engineering development, artwork, design work, plans and sketches to the BDC manufacturer.

4. The legislative history of the Trade Agreements Act of 1979 does not indicate that the Congress had any intention of changing the prime considerations for the qualification of duty-free treatment under GSP and that Congress' decision to cease extracting duty on the cost of engineering, etc., undertaken in the United States is not inconsistent with treating those same costs as direct costs of proc-

cessing operations in a BDC. Further, Congress made several other changes in GSP and did nothing about this one.

5. Because the entire GSP program is scheduled for congressional review, any change should await the expression of congressional intent resulting from such review.

6. A policy permitting the inclusion of the designated charges as direct costs of processing operations will benefit the economy of the United States.

7. Nothing in the background or legislative history of section 201 of the Trade Agreements Act of 1979, amending section 402 of the Tariff Act of 1930, suggests that the decision to exclude the designated "assists" from transaction value was intended to impact upon the operation of GSP. To take action at this time which would suggest that the opposite inference is true would tend to defeat the legitimate expectations of BDC's and impede business planning by American industry based upon existing administrative practice.

8. Another commenter saw no connection between the deletion of these "assists" from appraised value and their categorization as direct costs of processing operations for GSP purposes, nor any inconsistency between the two, and that they were two different legal concepts. Precedent for this point is the case of *Ford Motor Company* v. *United States*, 29 Cust. Ct. 553 (1952), which remains valid, that is, that a cost is properly includable no matter where it was incurred.

The phrase "direct costs of processing" as used in the Trade Act of 1974 is meant to include all costs which directly relate to the manufacture or production of merchandise.

9. If the so-called "assist" cannot be performed outside the United States, the purposes of the GSP program will be obstructed.

10. Consistency is important in the administration of GSP and Customs law generally. Therefore, Customs should not reject the rationale of the position taken under the previous law.

11. There is no reference to the term "assist" in the revelant portion of the Trade Act of 1974. The term "assist" as defined in section 402 of the Trade Agreements Act of 1979, was not meant to apply to the term "direct costs of processing" as set forth in section 503(b)(2) of the Trade Act of 1974. Furthermore, it is noted that the language of section 402 begins with "as used in this section." In addition, it is argued that if Congress wanted the term "assists" to apply to direct costs of processing requirements for GSP purposes, Congress could easily have made a reference to section 503(b)(2).

12. Relevant case law has established that the doctrine of legislative approval of administrative practice may be invoked where the practice has been followed by re-enactment of the statute without substantial change.

13. One commenter argues that because a practice by Customs has existed to include certain "assist" costs incurred in the United States as direct costs of processing for purposes of GSP, if Customs changes its position, such change in position should be effective only with regard to merchandise entered, or withdrawn from warehouse, for consumption on or after the 90th day after publication of the change in the Federal Register, pursuant to section 177.10(e), Customs Regulations (19 CFR 177.10(e)).

DETERMINATION

The arguments submitted on both sides were quite supportive of the respective positions. After careful review and analysis of the arguments, Customs is of the opinion that the better reasoned view is that costs which are not included in the appraised value of imp rted merchandise under section 402 of the Trade Agreements Act of 1979, are not includable as "direct costs of processing" for the purposes of determining the eligibility of an article for duty-free treatment under GSP. This ruling will be effective as to merchandise entered, or withdrawn from warehouse, for consumption on or after (90 days after publication in the Federal Register).

DRAFTING INFORMATION

The principal author of this document was Robert J. Pisani, Regulations Control Branch, Office of Regulations and Rulings, U.S. Customs Service. However, personnel from other Customs offices participated in its development.

A.R. DE ANGELUS,
Acting Commissioner of Customs.

Approved: October 16,1981.

JOHN WALKER, Jr,
Assistant Secretary of the Treasury.

[Published in the Federal Register Nov. 12, 1981 (46 FR 55686)]

U.S. Customs Service

General Notice

(067430)

Receipt of American Manufacturer's Petition to Classify Household Glassware

AGENCY: U.S. Customs Service, Department of the Treasury.

ACTION: Notice of receipt of American manufacturer's petition.

SUMMARY: The Customs Service has received a petition from an American manufacturer of household glassware. The petitioner contends that certain imported glassware used in the household should be classified as "other" household glassware, rather than as "specially tempered" glassware.

DATES: Interested parties may comment on this petition, and comments (preferably in triplicate) must be received on or before (30 days from the date of publication in the Federal Register).

ADDRESS: Comments may be addressed to the Commissioner of Customs, Attention: Regulations Control and Disclosure Law Division, Room 2426, 1301 Constitution Avenue, NW., Washington, D.C. 20229.

FOR FURTHER INFORMATION CONTACT: Thomas J. Lindmeier, Classification and Value Division, U.S. Customs Service, 1301 Constitution Avenue, NW., Washington, D.C. 20229 (202–566–5727).

SUPPLEMENTARY INFORMATION:

BACKGROUND

A petition has been filed under section 516, Tariff Act of 1930, as amended (19 U.S.C. 1516), by an American manufacturer of glassware used in the household. The petitioner contends that certain imported glassware which has been classified under the provision for household glassware which is "specially tempered," in item 546.38, Tariff Schedules of the United States (TSUS), is not "specially tempered," and thus is properly classifiable under the provisions for other house-

356-511 O - 81 - 3

hold glassware, according to value, in items 546.52 through 546.68, TSUS.

Customs Internal Advice 76/136 dated February 23, 1977, describes the test used by the Customs Service to determine if glassware is "specially tempered," as follows:

> "If the item is set on a solid surface and then broken by striking the inside center bottom or heel with a sharp center punch, the degree and uniformity of stress can frequently be determined. Strike the punch with a hammer, using blows of gradually increasing severity until breakage occurs.
>
> "An annealed (item) should . . . normally break into a small number of large pieces, say ten or less (frequently as low as three to five).
>
> "A tempered disk will break into a larger number of pieces, the number of which depends upon stress magnitude and distribution. If highly stressed, the glass will 'dice,' i.e., break into a large number of small, rather uniformly shaped pieces."

Accordingly, the petitioner's principal contention is that "*all* specially tempered glass 'disintegrates into small rounded-edge pieces,' when broken." (emphasis supplied) As the imported household glassware in question allegedly "does not consistently break into a large number of small uniformly shaped pieces with rounded edges," petitioner contends that the subject glassware "obviously has not received the additional, protective processing necessary to qualify it as 'specially tempered'" and thus is not classifiable under item 546.38, TSUS.

COMMENTS

Pursuant to section 175.21(a), Customs Regulations (19 CFR 175.21(a)), the Customs Service invites written comments on this petition from interested parties.

The American manufacturer's petition, as well as all comments received in response to this notice, will be available for public inspection in accordance with section 103.11(b), Customs Regulations (19 CFR 103.11(b)), between the hours of 9:00 a.m. and 4:30 p.m. on normal business days, at the Regulations Control and Disclosure Law Division, Headquarters, U.S. Customs Service, Room 2426, 1301 Constitution Avenue, NW., Washington, D.C. 20229.

AUTHORITY

This notice is published in accordance with section 175.21(a), Customs Regulations (19 CFR 175.21(a)).

MARILYN G. MORRISON,
(For Director, Office of Regulations
and Rulings).

[Published in the Federal Register, Nov. 12, 1981 (46 FR 55822)]

United States Court of International Trade

One Federal Plaza
New York, N.Y. 10007

Chief Judge

Edward D. Re

Judges

Paul P. Rao
Morgan Ford
Scovel Richardson
Frederick Landis
James L. Watson
Herbert N. Maletz
Bernard Newman
Nils A. Boe

Senior Judge

Samuel M. Rosenstein

Clerk

Joseph E. Lombardi

Decisions of the United States Court of International Trade

(Slip Op. 81-94)

MICHELIN TIRE CORPORATION, PLAINTIFF *v.* UNITED STATES OF AMERICA, DEFENDANT

Before WATSON, *Judge*.

Court No. 75-9-02467

Countervailing duty on tires

The administrative determination that these imported tires benefitted from bounties or grants from governmental regional development programs in Canada is found to be correct. However, the Court

finds error in the calculation of the bounty resulting from a loan to the manufacturer and in the allocation of grants over the period of the loan. For the required correction and further determination the matter is remanded with instructions to the Secretary of Commerce. Plaintiff's proof of offsets due to locational costs is found insufficient to justify any modification of the amounts of the bounties or grants.

[Judgment in part for the defendant and in part for the plaintiff. Remand to the Secretary of Commerce ordered.]

(Dated October 26, 1981)

Windels, Marx, Davies & Ives (*Paul Windels, Jr.* and *John Y. Taggart* at the trial and on the briefs) for the plaintiff.

J. Paul McGrath, Assistant Attorney General; *David M. Cohen*, Director, Commerical Litigation Branch (*Joseph I. Liebman*, Attorney in Charge, International Trade Field Office, Commercial Litigation Branch and *Sidney N. Weiss*, Esq. at the trial and on the briefs) for the defendant *Frederick L. Ikenson* for amicus curiae Rubber Manufacturers Association.

WATSON, *Judge:* Plaintiff, the Michelin Tire Corporation, brought this action under 19 U.S.C. § 1514 to contest the denial of its protest against the assessment of countervailing duties on imported x-radial steel-belted tires. The tires were manufactured in Canada by Michelin Tire Manufacturing Co. of Canada Ltd. (Michelin Canada).[1] They were entered at the ports of Portland and Calais, Maine and Baltimore, Maryland between April 2, 1973 and January 9, 1974. The countervailing duties were assessed pursuant to T.D. 73-10 (1973) and T.D. 74-254 (1974) in which the Treasury Department published its determination that these tires were subject to bounties and grants within the meaning of 19 U.S.C. § 1303 and determined that a countervailing duty of 6.7702 percent per tire should be assessed.

The basic determination was expressed in T.D. 73–10 as follows:

> It has been ascertained that Michelin Tire Manufacturing Company of Canada, Ltd., has had constructed two manufacturing plants in the Province of Nova Scotia, one in Bridgewater, Nova Scotia, for the manufacture of steel cord for use in manufacturing tires and the other in Granton, Nova Scotia, for the manufacture of tires. A substantial majority of the tires produced are being and are expected to continue to be exported to the United States. It has been further ascertained that in connection with the establishment of the two manufacturing plants, the Government of Canada has made certain grants and made available to Michelin a special accelerated depreciation provision

[1] Plaintiff, Michelin Tire Corporation is a New York corporation which, during the relevant period, imported Michelin steel-belted radial tires manufactured by various foreign affiliates. Plaintiff and Michelin Canada, the producer of the tires subjected to countervailing duty, are subsidiaries of the Michelin Investment Holding Company Limited (MIHC) a Bermuda Corporation. MIHC is part of the Michelin group under Companie Generale des Establissements Michelin, the group's corporate parent, with headquarters in Clermont-Ferrand, France.

under Canadian income tax law. Additionally, the Province of Nova Scotia has provided certain grants and provided a low interest-rate loan and the municipalities concerned have made certain concessions which lower the property taxes on each plant.

After consideration of all information received, the Bureau is satisfied that exports of x-radial steel belted tires, manufactured by Michelin Tire Manufacturing Company of Canada, Ltd., are subject to bounties or grants within the meaning of Section 303.

Accordingly, notice is hereby given that x-radial steel belted tires, manufactured by Michelin Tire Manufacturing Company of Canada, Ltd., imported directly or indirectly from Canada, if entered for consumption or withdrawn from warehouse for consumption after the expiration of 30 days after publication of this notice in the Customs Bulletin, will be subject to the payment of countervailing duties equal to the net amount of any bounty or grant determined or estimated to have been paid or bestowed.

Section 303 of the Tariff Act of 1930, 19 U.S.C. § 1303 (1970) reads as follows:

Countervailing duties

> When ever any country, dependency, colony, province, or other political subdivision of government, person, partnership, association, cartel, or corporation shall pay or bestow, directly or indirectly, any bounty or grant upon the manufacture or production or export of any article or merchandise manufactured or produced in such country, dependency, colony, province, or other political subdivision of government, and such article or merchandise is dutiable under the provisions of this chapter, then upon the importation of any such article or merchandise into the United States, whether the same shall be imported directly from the country of production or otherwise, and whether such article or merchandise is imported in the same condition as when exported from the country of production or has been changed in condition by remanufacture or otherwise, there shall be levied and paid, in all such cases, in addition to the duties otherwise imposed by this chapter, an additional duty equal to the net amount of such bounty or grant, however the same be paid or bestowed. The Secretary of the Treasury shall from time to time ascertain and determine, or estimate, the net amount of each such bounty or grant, and shall declare the net amount so determined or estimated. The Secretary of the Treasury shall make all regulations he may deem necessary for the identification of such articles and merchandise and for the assessment and collection of such additional duties.

At an earlier stage of this action the Court denied defendant's motion to limit the scope of trial to a review of the administrative record and to limit the standard of review to whether or not the decision of the Secretary of the Treasury was unreasonable, arbitrary or capricious. *Michelin Tire Corporation* v. *United States*, 81 Cust.

Ct. 157, C.R.D. 78–12 (1978). In a later opinion the Court denied defendant's motion for summary judgment and elaborated on its reasons for finding that a trial *de novo* was proper. *Michelin Tire Corporation* v. *United States*, 82 Cust. Ct. 308, C.R.D. 79–6, 469 F. Supp. 270 (1979). Following the trial the Court granted the Rubber Manufacturers Association, a trade association of tire producers in the United States, permission to file a brief as *amicus curiae*.

The basic issues in the action are whether Michelin Canada received bounties or grants upon the manufacture or production of these tires and, if so, whether the calculation of the bounties or grants and their allocation to the tires produced was correct. Plaintiff has raised a number of issues which challenge the conduct of the administrative proceeding and which, were this simply a review of the countervailing duty investigation, might be of greater importance. However, since this is a trial *de novo* the only issues which are of controlling importance are those which relate to the correctness of the administrative decision. Nevertheless, plaintiff does make some claims which, though grounded in the conduct of the administrative proceeding, raise issues in the judicial proceeding and these shall be briefly discussed.

Plaintiff argues that the deficiencies on the administrative level were such as to warrant removing the presumption of correctness normally given to the acts of the Secretary of the Treasury by 28 U.S.C. § 2635(a).[2] In effect this would place the burden on defendant to prove the correctness of its determination.

Plaintiff also asserts that due to the discretionary manner in which this determination was reached the imposition of countervailing duties was barred by Article VI of the General Agreement on Tariffs and Trade.[3]

With respect to these claims plaintiff asserts that the defendant could not identify the specific decisionmaker in this matter, did not offer factual findings in support of its determination, did not cite precedents or express the standards of its determination, acted in response to a concealed complainant, and acted in a novel and inconsistent manner in singling out an individual company for the first time and treating it differently from the beneficiaries of similar programs in other countries.

In the opinion of the Court the presumption of correctness is not

---

[2] 28 U.S.C. § 2635(a). In any matter in the Customs Court:

(a) The decision of the Secretary of the Treasury or his delegate, is presumed to be correct. The burden to prove otherwise shall rest upon the party challenging a decision.

[3] Article VI, Anti-Dumping and Countervailing Duties:

. . . . . .

6.(a) No contracting party shall levy any antidumping or countervailing duty on the importation of any product of the territory of another contracting party unless it determines that the effect of the dumping or subsidization, as the case may be, is such as to cause or threaten material injury to an established domestic injury, or is such as to retard materially the establishment of a domestic industry.

affected by vagaries in the making of the administrative determination when the challenge is subject to trial *de novo*. It is sufficient if the final determination is expressed in an understandable way. If the Court were simply making a limited review of an administrative determination expressed in the form shown in T.D. 73–10 and T.D. 74–254 it is likely that it would have first required a clarification of the determination to the extent necessary to reveal the specific nature and amount of the bounties and grants and the calculations and reasoning used to arrive at the determination of the countervailing duty. However, in these circumstances it is sufficient that the determination is clear enough for a coherent challenge to be made. The underlying detailed findings are then the proper object of discovery and their absence from the determination itself is of no moment. In this sequence of events the issuance of the determination by the Secretary of the Treasury is adequate identification of the decision-maker.

While the initial concealment of the Rubber Manufacturers Association as the moving force behind the complaint does not commend itself to the Court's sense of fairness, it does not represent a defect in the substantive determination. Furthermore, it does not amount to a deprivation of due process in a setting in which the aggrieved party has the right to a trial *de novo*.

The claim that Michelin was singled out from among other beneficiaries of similar programs and the Government's general admissions that it was aware of other tire companies receiving similar benefits (Defendant's Admissions 11, 52 and 53) did not amount to a proven case of discriminatory enforcement of the law. See generally, *International Business Machines Corporation* v. *United States*, 343 F. 2d 914, 170 Ct. Cl. 357 (1965), cert. denied 382 U.S. 1028 (1966).

In sum, none of the deficiencies alleged by plaintiff warranted the removal of the presumption of correctness attaching to the Secretary's determination that countervailing duties should be assessed on these importations.

The Court also finds that the determination did not violate the terms of GATT. Concededly, Article VI requires an injury determination which was not made in this case. However the Protocol of Provisional Application provides that the United States, among others, undertook to apply Article VI "to the fullest extent not inconsistent with existing legislation." This provision allowed the continued effectiveness of inconsistent legislation if it was mandatory in nature. The countervailing duty law under which this determination was made was mandatory and therefore even though it did not require an injury determination it remained effective. Although plaintiff seeks to characterize the Secretary's application of the law as discretionary,

this was not proven to be the case. The investigation, whatever its flaws, did find the existence of bounties and grants and, under the law, the Secretary had no discretion to do other than order the assessment of countervailing duties.

The proper focus of this action was on the trial and on whether plaintiff overcame its burden of disproving the correctness of the Secretary's decision. The record in this case consists of the testimony of six witnesses for the plaintiff, together with the depositions of three witnesses introduced by plaintiff, seven witnesses for the defendant and several hundred documentary exhibits. The evidence related to five principal subjects: the decision to locate in Nova Scotia, the benefits received, the computation of the benefits, the disadvantages of the location, and the allocation of the benefits to production.

The witnesses called by plaintiff were as follows:

Sidney Bloor, a Vice President and technical engineer with the plaintiff, testified concerning the technical differences between the steel-belted radial tire manufactured by Michelin and other tires, and the effect these technical differences had on tire and vehicle performance.

A. Voya Peters, an Executive Vice President of plaintiff and a Vice President of Michelin Canada, who participated in the later phase of the negotiations leading to the Nova Scotia plants, in the construction of the plants, and in the refinancing of the IEL loans, testified concerning these events.

Dr. Carl Staubli, an Executive Vice President of Credit Suisse, testified concerning the Swiss money markets in the late 1960's and early 1970's, exchange rates, and the borrowing capacity of Michelin Canada.

Marc de Logeres, the President of plaintiff and of Michelin Canada, who had supervised the investigation and the establishment of the factories in Nova Scotia, as well as the operations of the Nova Scotia plant, testified concerning those matters.

Arnaud d'Arbonneau, a Michelin employee, testified concerning a study which he had prepared to quantify the extra costs incurred Michelin Canada by reason of location in Nova Scotia rather than Ontario.

Stewart Kahn, C.P.A., an audit partner of Arthur Andersen & Co., an international accounting firm, testified concerning the appropriate accounting method for allocation of the alleged bounties.

The witnesses testifying on behalf of the defendant were follows:

Richard Worzel, a Canadian financial analyst, testified jconcerning interest rates, debt financing of capital investment, and the nature of the bonds issued by Michelin Canada to Industrial Estates Ltd. (IEL).

Stanley Nehmer, a former Deputy Assistant Secretary of Commerce for Trade, and presently president of Economic Consulting Services, Inc., testified regarding the determination

of the bounties, methods of allocation and the validity of the d'Arbonneau Report.

Professor Morris Mendelson, a professor of finance at the Wharton School of the University of Pennsylvania, testified with respect to interest rates in the Eurobond and Swiss money markets in 1968 through 1972, and with respect to the functioning of those markets.

Virgil Ketterling, an economist in the Bureau of Industrial Economics of the Department of Commerce, testified with respect to the conclusions on regional disadvantages contained in the d'Arbonneau Report.

Stanley Hopard, a government employee and rubber import specialist with the U.S. Bureau of Customs, testified concerning the fact that the entry papers in this case indicated that Michelin Tire Corporation paid the freight on shipments from Canada.

Jack C. Weinstein, general manager of imports and distribution for Michelin Tire Corporation, testified that Michelin Tire Corporation paid the freight from the Canadian border to the ultimate destination.

Robert P. Knapp, Jr., counsel to Michelin Tire Corporation in some matters, was called by defendant as an adverse witness and testified concerning the report he did in late 1968 with respect to Nova Scotia and the signing of July 17, 1969 documents, which will be discussed later.

Plaintiff also offered into evidence signed copies of the depositions of Daniel L. LeJeune, Jean Chapot and Richard B. Self.

Daniel LeJeune, the Michelin engineer who had investigated Nova Scotia and who had dealt extensively with IEL with respect to the establishment of the factories in Nova Scotia, had been deposed by the government with respect to his participation in the transaction.

Jean Chapot, who was the first administrative head of the Michelin plants in Nova Scotia and who participated in the construction of the plants and their initial operation, had been deposed by the government with respect to his participation in the transaction.

Richard B. Self, the Treasury staff man in charge of the Michelin case, had been deposed by plaintiff concerning the circumstances surrounding the creation of the administrative record by the Treasury Department.

The testimony and evidence established the following background to this dispute;

In 1967 Michelin was considering the establishment of manufacturing facilities in North America to satisfy the growing demand for its belted radial tires. Plans for facilities in the United States were deferred when the U.S. Department of Transportation began to consider proposals for safety rules whose method for measurement of tire pressure would have virtually barred the belted radial tire.

In late 1967, Industrial Estates Limited (IEL), a provincial Crown corporation of the province of Nova Scotia, charged with promoting

economic development, invited Michelin to establish manufacturing facilitites in Nova Scotia. Discussions on this subject were conducted by representatives in France and Nova Scotia in early 1968. In the fall of the year Michelin decided to establish a tire manufacturing operation in Nova Scotia, consisting of a tire factory and a cord factory.

In July of 1969 formal agreements were entered into between IEL and various Michelin enterprises. One provided for IEL to grant MIHC $5 million in capital grants and a maximum of $2.6 million in training grants, both of which amounts were to be used by MIHC to subscribe to the shares of Michelin Canada which would then be obligated to apply the money to make payments on the IEL loan.

The loan was from IEL to Michelin Canada in the amount of $50 million at the rate of 6 percent and took the form of purchases of $50 million of first mortgage bonds issued by Michelin Canada. The loan was utilized for construction in the period from February 1970 through December 1972.

In addition, IEL obtained agreements from the town of Bridgewater and the county of Pictou that for ten years the real property taxes on the construction financed by IEL loans would be in the amount of 1 percent per year of the actual cost of construction, accrued to tax date, without provision for depreciation. This replaced the normal method of real property taxation based on fair market value.

In 1972, 1973 and 1974, Michelin Canada also received grants under the Canadian Area Development Incentives Act (ADIA) and its successor, the Regional Development Incentives Act (RDIA) in a total of approximately $8.5 million. [Exhibit 19, p. 43]

The central issues in this action may therefore be stated as whether the above described agreements were bounties or grants and if so, whether defendant correctly calculated them and correctly allocated them to production.

Discussion will begin with the most complex of the agreements and the one in which the factual existence of a bounty or grant was most seriously disputed.

The I.E.L. $50 Million Loan

The first IEL loan agreement provided for IEL to purchase $50 million of first mortgage bonds issued by Michelin Canada. The bonds were issued in two series: Series A, in the amount of $34 million with a maturity of 12 years and series B, in the amount of $16 million with a maturity of 20 years. Both series had interest payable semi-annually at 6 percent per annum with principal repayments to com-

mence thirty months after issue. (A later agreement deferred payment of the first seven principal repayments and is discussed in due course.)

In addition, the loan agreement provided that capital grants for which Michelin Canada had applied under the Area Incentives Development Act of Canada would be applied to its principal and interest obligations on the bonds. Subsequently, in 1972, 1973 and 1974, Michelin Canada received the approximately $8.5 million in cash grants previously mentioned.

The $50 million loan was "taken down," that is to say, IEL purchased portions of the bond issues, in seven segments, beginning in February of 1970 and ending in December of 1972 when the manufacturing facilities were completed.

According to plaintiff, Michelin Canada could have obtained financing on equivalent terms from within the Michelin group, from its bankers, or from the issuance of its bonds. It assertedly accepted IEL financing, not for any advantage in interest rates, but rather to obtain the financial involvement of the local community and thus insure the cooperation of important public and private organizations.

According to defendant, Michelin Canada could not have obtained a comparable loan at less than 8 percent interest and the IEL loan therefore represented a bounty. The asserted bounty consisted of the 2 percent of annual interest which Michelin Canada did not have to pay during the period of the loan.

The Court's evaluation of the testimony and the evidence lead it to conclude that the rate of 6 percent was indeed preferential, but not to the extent found by the defendant. In reaching this conclusion, the Court considered a number of alternative arguments made by the parties.

To begin with, the ability and willingness of other members of the Michelin group to provide financing was not proven. Assuming, however, that financing would have been forthcoming from related corporations the availability of such funds, and the terms on which they might be offered, could not validate the terms of the IEL loan. This is particularly so when it is considered that the law mentions specifically the possibility of bounties and grants from other corporations and is not limited to the largesse of governments. Ultimately, the validation of an interest rate from a related company would have to come from independent and unrelated sources.

The Court therefore considered the evidence regarding equivalent financing from independent sources. It first had to pass on amicus' assertion that the search for comparable financing had to be limited to Canada. Amicus argued that allowing reference to rates outside the country in which the dutiable goods were produced might allow the validation of a rate lower than the actual cost of money to the

lender. This possibility does exist, but it does not violate the Court's understanding of the countervailing duty statute. The law is not concerned with the sacrifice made by the party supplying a financial resource but rather with the benefit experienced by the recipient. The making of a loan at a rate of interest *below* the cost of money to the lender would not assure the *existence* of a bounty any more than the making of the loan *above* the cost of money to the lender would assure the *absence* of a bounty. For a company lacking creditworthiness in its national setting even a loan yielding profit to the lender could be a bounty. On the other hand, a company with the ability to obtain financing from international sources would not necessarily receive a bounty from a loan which appeared preferential within a particular national financial market.

Accordingly, since it was proven that Michelin Canada did have access to a variety of independent sources of financing outside Canada, the Court did not consider Canada to be the proper market for evaluation of the IEL loan rate.

The Court then weighed the evidence regarding possible financing from a Swiss bank, from the Swiss bond market, and from the Eurobond market.

Plaintiff offered the testimony of Dr. Carl Staubli, an Executive Vice President of Credit Suisse, that in 1968 or 1969 his bank would have made a $50 million loan to Michelin Canada at a rate of 5½ percent. He also testified that Michelin Canada could have borrowed in the Swiss bond market at an interest rate of 5¾ percent to 6 percent from 1968 through October 1969. These rates were for issues of up to 15 years, could not exceed 60 million Swiss francs per borrower (approximately $13.8 million dollars in 1968) and had to be approved by the Swiss National Bank. According to defendant's expert witness on financing, Professor Morris Mendelson, the approval process took about two years at that time.

The Court was not persuaded that the private bank loan or Swiss bond issue represented viable alternatives to the IEL loan. As to the private loan the Court found the testimony excessively conclusory. Since this was not purely a matter of expert opinion but a personal retrospective view of how his bank would have conducted itself in a given transaction, the Court would require additional supporting detail and further substantiation of the conclusion. At the very least this would involve concrete testimony regarding the exact methods by which the loan would have been accomplished including more detail as to the loan decision process.

As to the Swiss bond financing, the Court is of the view that the evidence establishes that the existence of a committed fund of $50 million was of central importance to Michelin's plans. The Swiss bond

financing, due to its previously mentioned monetary limitations and time constraints, could not represent a comparable source of financing. The Court did not accept plaintiff's argument that sufficient advance arrangements could have been made by Michelin Canada to insure an equivalent flow of financing for its construction plans.

Although hindsight reveals that the obligation to repay a Swiss bank loan or bond issue in Swiss francs would have subsequently turned out to be highly disadvantageous for a firm earning Canadian dollars, this was not a factor in the Court's decision. The evidence establishes that in 1968 and 1969, had other considerations been equal, the making of a loan in Swiss francs would not have been unlikely or imprudent. It was the incompleteness of the testimony regarding the bank loan and the sum limitations and timing shortcomings of Swiss bond financing which were the defects in plaintiff's proof.

This left the Eurobond market, which, in the words of Professor Mendelson, can be described as a market formed by electronic or telecommunications. It is characterized by the issuance of securities in a currency which is not native to the investors and by the fact that issues are typically offered by an international syndicate, in many countries at once. Issues were also typically guaranteed by the parent corporation. In 1968 and 1969 the bonds were usually denominated in U.S. dollars.

The evidence established that the Eurobond market was strictly interested in the name of the issuer as opposed to the security of an issue. It was established that Michelin was a respected name and that Michelin Canada could expect to get the most favorable terms available.

Against this background the Court first had to determine the proper time for making the comparison between the 6 percent rate on the IEL loan and rates in the Eurobond market, because the period from 1968 to 1970 was a time of rising interest rates.

The government argued first for the date of February 1970 when Michelin Canada actually began "taking down" the proceeds of the IEL loan. It argued that this was the date when Michelin Canada would have gone to the Eurobond market if it did not want to pay interest before it needed the money. However, the use of the date when a borrower actually begins utilizing the proceeds of a loan is palpably unfair because a comparison at that point could attribute benefit to him from market fluctuations occurring well after his interest rate is fixed. This would not be the bestowal of a bounty but the result of unpredictable events.

For the gauging of any benefit to plaintiff it is fairest to make the comparison on the date when plaintiff became certain to receive the rate under scrutiny, not when he actually receives the amount subject to the rate under scrutiny.

356-511 O - 81 - 4

Plaintiff argues that this came about relatively early in the negotiations by an oral commitment of IEL in July 1968. However, since the project at that time envisioned only one factory requiring $34 million in financing, it cannot be said that the financial terms had sufficient finality.

Plaintiff then turns to the fall of 1968 when the need for two factories was clear and when IEL reiterated its oral commitment to finance the full estimated cost of $50 million at 6 percent. Plaintiff stresses the custom of the financial community by which oral commitments of this type are considered binding and are unvaryingly honored. Although the Court has high regard for this custom, it does not, on balance, consider oral commitments to be in a form which can fix the date with sufficient reliability in bounty determinations. In short, the Court is of the opinion that an event of this nature must be recorded in some permanent form before it can serve as a basis for practical administrative and judicial comparisons.

This leaves plaintiff at the date of February 1969 when an exchange of letters took place in which IEL stated its offer of a $50 million loan at 6 percent and MIHC confirmed its agreement subject to certain conditions which did not bear on the interest rate. [Joint Exhibits 16 and 17] Defendants recede to an alternate date of July 17, 1969 which was the date of the contract for the loan. Defendant asserts that the date of contract would be the earliest date at which the terms of the agreement were sufficiently definite to make interest rate comparisons.

The Court is of the opinion that the date of a final contract is not necessarily the proper date on which to make a determination of whether the interest rate embodied in the contract is preferential in comparison to prevailing rates and represents a bounty. We are here not concerned with the enforceability of the terms of a contract but rather with the question of whether a rate of interest represents a special, calculated advantage bestowed on the borrower. If the facts demonstrate that the loan terms were essentially agreed to at an earlier date it would not be fair to measure the bestowal of an interest bounty purely by reference to a later contract date. Here the Court has been persuaded that insofar as the interest rate is concerned the contract represented only a formalized expression of an interest rate which had been previoulsy agreed to and which is sufficiently memorialized and proved by the exchange of letters in February 1969. Once again, to make the comparison with the higher interest rates which prevailed at contract time would, in this situation, attribute to Michelin Canada a measure of bounty received purely by operation of external forces outside its control and after its receipt of a certain rate had been fixed.

In so deciding the Court does not express the opinion that the

contract date is always incorrect for making interest rate comparisons. There will obviously be innumerable variations in the circumstances of different financial transactions. Here, however, the Court is of the opinion that the exchange of letters of February 1969 expresses the final understanding of the parties regarding the interest rate with a verifiable degree of definiteness so as to serve as the proper date for making a comparison with prevailing rates.

On the comparison itself, the Court was persuaded by the testimony of Professor Mendelson that the interest rate on a U.S. dollar Eurobond offering by Michelin Canada in February of 1969 would have have been approximately 7.26 percent. This was derived from a comparison to a U.S. dollar Eurobond offering by Transocean Gulf in February 1970 in the amount of $30 million at a rate of 7.26 percent.

Although the testimony makes it clear that the fixing of bond rates is not an exact science, the Court finds that the Transocean Gulf issue is fairly comparable.

Professor Mendelson also testified that the offering of an issue on the Eurobond market would require Michelin to pay 2½ percent of the offering to the underwriter and approximately $100,000 of preparation expenses, the total of which he expressed as approximately 30 base points or .30 percent added to the 7.26 percent, making it 7.56 percent.

In these comparisons the Court did not give any importance to the fact thar the IEL loan was secured while Eurobond issues were unsecured. Although in the abstract this might suggest a further justification for the lower rate of the IEL loan, the testimony made it clear that security is not a factor on the Eurobond market. Since that market is being used as a benchmark, its conventions must be controlling. Nor, on the other hand, did the Court find that thd $50 million size of the theoretical Michelin Eurobond issue would have required a somewhat higher rate than the $30 million Transocean Gulf issue. In the opinion of the Court the size of the Michelin issue was within the capacity of the market to absorb without any additional interest.

For the above reasons the Court concludes that the proper time to make a determination of whether Michelin Canada was receiving an interest bounty was in Febuary of 1969, at which time the correct comparison leads to the conclusion that the 6 percent interest rate given to Michelin Canada by IEL was a bounty to the extent that it was less than the 7.56 percent interest which Michelin would have paid in the Eurobond market.

The Deferral of Payments of Principal

On June 1, 1972 (shortly before the first payment of principal was due on the $50 million loan) IEL and Michelin Canada entered

into a new agreement. [Joint Exhibit 135] It provided *inter alia*, that for the purpose of expansion of the plants, IEL would permit Michelin Canada to defer the first seven repayments of principal and would allow it to refinance the amounts at a rate equal to the cost of borrowed money to Nova Scotia plus ⅛ of 1 percent, if the cost to Nova Scotia at the time of a deferral was less than 9 percent. This new arrangement resulted in the deferral of a sum of approximately $16 million which, taking into account the varying rates at the times of the various deferrals, was subject to a combined rate of interest of 8.9 percent.

Plaintiff asserts that the later transaction represented a refinancing of the original loan, done to allow expansion of the production facilities to include passenger car tires and to counter criticisms made during the elections in Nova Scotia that IEL had lost money on the last $16 million of the $50 million loan it had made to Michelin Canada. Plaintiff argues that the actual rate on the complete IEL financing can only be determined by combining the 6 percent rate on the $34 million which was not refinanced and the 8.9 percent rate on the deferred $16 million, thus yielding an effective rate of 7.15 percent for the entire loan. Plaintiff argues that if a bounty existed it should be measured by the differences between 7.15 percent and the prevailing rate.

Defendant argues that the transaction under discussion was a new loan and further, was a new subsidy, because the deferral of the seven payments of principal had a simultaneous present value which was not offset by the higher rate of interest paid on the deferred amounts.

In the opinion of the Court the plaintiff has failed to prove that the rate of 6 percent for the original $50 million loan should be modified or considered to apply to less than $50 million. The documents relating to the new financing agreement [Joint Exhibits 114, 115, 135, 136 and 143] indicate to the Court that a second and separate loan was made for an amount of approximately $16 million. The only connection with the first loan was that the deferral of its first seven principal payments served as the source of funds constituting the second loan. In the Court's opinion the evidence supports a finding that Michelin Canada received a total amount of approximately $66 million from these loans; a first loan in the amount of $50 million at the rate of 6 percent and a second loan in an amount equal to the sum of the first seven payments of principal due on the second loan, or approximately $16 million at the combined rate of 8.9 percent.

The government's contention that the second loan represented an additional bounty must be examined with the foreknowledge that under the law governing this action the government could not obtain

a judgment for additional duties. *Beacon Cycle and Supply Co.* v. *United States*, 81 Cust. Ct. 46, C.D. 4764 (1978). Nevertheless, the Court's opinion on this point should be rendered in order to complete the analysis of the issues in this action and possibly provide guidance in future proceedings.

The removal of the necessity of making a payment of principal has a value separate and apart from the value of the new loan in which the deferred principal is incorporated. It is reasonable to conclude that a benefit of some sort has been bestowed upon the borrower unless a showing is made that the terms of the new loan include adequate payment for the deferral. The interest on the new loan pays for the use of the money during the term of the loan. It does not normally compensate the lender for giving up its right to receive the payment of principal due on an earlier loan.

As was previously mentioned, the relationship of the interest rate to the cost of money to the lender tells us nothing about whether it is preferential or "bountiful," let alone whether it compensates for the deferral. Nor do references to the prime rate in Canada, which is a measure of the short term cost of money, bear on the question. It is apparent that the payment to IEL of ⅛ of 1 percent above the cost of money to the government cannot represent more than interest for the new loan. The deferral of principal payments, not being compensated for in any way, must be a bounty.

The government proposes that the bounty be measured as if, in each year of the duration of the new loan, the discounted value of the deferred amount in that year was being received, again and again. For example, the first deferred payment of $2,244,400 in the first year of its deferral (1972) is given a present value by discounting it, using the prime rate then in effect. That amount is considered the benefit in the year 1972. In 1973 the calculation is repeated. The deferred amount is again discounted to its present value by means of the then prevailing prime rate and the result is considered the benefit in the year 1973. By this means the benefit from the deferral of a single payment of $2,244,400 becomes $7,658,973 after eight years and the benefit from the entire deferral of about $16 million becomes $47,316,026. If deductions are made for the interest actually paid on the deferred amounts the total benefit is reduced to $39,010,404.

With respect to these calculations the Court must agree with the remark made by Plaintiff's counsel in mock approbation that they give one renewed respect for the profession of economics.

This form of calculation is unacceptable because it exaggerates the benefit of a deferral of principal beyond reason and beyond what even an outright gift of the deferred sum would justify. The benefit of deferring the obligation to repay a principal sum when it is due must

be limited to the effects of a single act, a single principal amount and the conventional financial benefits which its deferral bestows. If benefits exist in years after the year of deferral they cannot be more than interest ramifications of an original benefit in the year of deferral. To revive the deferred amount year after year defies reality.

The Court will not undertake an independent calculation of what the benefit from such a deferral could be. It suffices to say, for the purpose of this case, that the government's proposed calculation is unjustified. The Court is confident that if it becomes necessary conventional methods of financial analysis can be applied to this question to yield a benefit calculation which is accurate and fair.

The Real Property Tax Arrangement

Michelin Canada's municipal tax rate was fixed for ten years at 1 percent of its construction costs by an agreement between IEL and the municipalities of Pictou (Granton) and Bridgewater. This was an alternative to taxation based on the fair market value of its property. Plaintiff failed to prove that this did not represent a bounty, as found by the defendant. Although its purpose may have been to replace the uncertainty of the normal tax calculation with a definite figure, there was no showing that the normally calculated tax would not have been greater. (Defendant's Exhibit D shows a $2.15 tax rate in Bridgewater for 1974.) Plaintiff attempted to prove that the fair market value of its property did not approach its construction cost but this took the unpersuasive form of argument and hypothesis.

In the absence of direct evidence that the special tax arrangement did not result in lower payments than would have been made ordinarily, the finding that a bounty results must be upheld. See, *ASG Industries, Inc.* v. *United States*, 85 Cust. Ct. ——, C.D. 4863 (1980).

Offsets

Plaintiff claims that the bounties and grants bestowed on Michelin Canada were more than offset by the disadvantages flowing from its location in Nova Scotia. It argues that the measurable disadvantages of locating there ought to be considered in arriving at the calculation of whether a net bounty existed.

Amicus challenges the legal correctness of plaintiff's proposition that locational disadvantages can be offset against bounties or grants. Defendant appears to accept the basic proposition and confines itself first, to arguing that offsets should be allowed only in the specific areas for which the grants or bounties were given, e.g., grants for construction should be offset by excessive costs of construction due to the location. Defendant next argues that offsets should not be

allowed because Michelin would have located in Nova Scotia even if it did not receive grants. Defendant also argues that only overcosts which occurred prior to the dates of entry of the merchandise in this case, that is to say, prior to 1973, should be considered. Finally, defendant argues that plaintiff's evidence was insufficient to prove the overcosts it claimed.

The legal objection of amicus to any consideration of offsets must be considered first.

Prior to the decision in *ASG Industries, Inc.* v. *United States*, 67 CCPA—, C.A.D. 1237, 610 F. 2d 770 (1979), the Court would have agreed with amicus. In *Nicholas & Co.* v. *United States*, 249 U.S. 34 (1919), a similar offset argument was made and was rejected by the Supreme Court. In that case an act of Parliament provided for the payment of allowances to those who exported spirits "in consideration of the loss and Hindrance caused by Excise Regulation in the Distillation and Rectification of Spirits in the United Kingdom. . . ." It was argued that these payments did not represent a bounty on exportation because they were only reimbursements of expenses of manufacture necessary to accommodate the peculiar conditions and necessities of the British fiscal policy and did not even compensate the loss they were intended to reimburse.

The Supreme Court looked simply to the fact of payment and the aid to competitive position that resulted. In so concluding, the Court relied on the decision in *United States* v. *Passavant*, 169 U.S. 16 (1898), and stated in summary of that decision and with obvious approval that " . . . the decision was not determined by a consideration of costs of manufacture or their reimbursement, nor by the requirements of the policies of the exporting country. . . ." 249 U.S. at 41.

More recently, a similar argument was made in an action challenging the finding of the Secretary of the Treasury that payments to float glass producers, made under an Italian regional development program, were *not* bounties or grants. In that action the Secretary's decision was defended on the ground, *inter alia*, that he had taken into account the fact that the programs provided offsets, not premiums. The Court held this consideration to be irrelevant stating that " . . . there can be but one inquiry. Was something - bounty or grant—paid or bestowed upon the manufacture or production or export of float glass? . . . Further inquiry is neither relevant nor necessary." *ASG Industries, Inc.* v. *United States*, 82 Cust. Ct. 101, C.D. 4794, 467 F. Supp. 1200, 1239 (1979), *appeal dismissed* June 18, 1980.

However, at the end of 1979 the decision on appeal of another case involving benefits to float glass producers from the West German regional development programs introduced the possibility that proof

of offsets might be utilized to reduce the bounties or grants. *ASG Industries, Inc.* v. *United States*, 67 CCPA— 610 F. 2d 770 (1979).

In that case, the trial court had concluded that the Secretary's failure to impose countervailing duties was correct because the bounties did not lead to the distortion of international trade. On appeal the decision was reversed, based on the conclusion that it was error to employ a variant of an injury test when the law did not require one. The appellate court then proceeded to discuss the difference between finding that a bounty exists and the determination of a duty equal to the *net* bounty. It stated that the use of the term net bounty ". . . implies that certain deductions may be made from the actual payments to calculate the net bounty or grant and that all relevant circumstances are to be taken into account." 610 F. 2d at 777. It then stated as follows:

> Although the Secretary apparently made a feeble attempt to calculate the amount of the net bounty or grant involved here, the statement that "[t]he German Government has advised the Treasury Department that these benefits have the effect of offsetting disadvantages which would discourage industry from moving to and expanding in less prosperous regions" is totally inadequate. *If a factual basis were shown for such an assertion, it might be concluded that no net bounty or grant was involved.* [15-5] However, contrary to the dissenting opinion, the statement that Treasury was "advised" is hardly a factual basis supporting the conclusion that there was no bounty or grant. See *Yale University* v. *Department of Commerce*, 65 CCPA 97, 104, 579 F. 2d 626, 632–33 (1977). Once it is established that a foreign manufacturer is receiving payments such as those here involved (not "every payment," as the dissenting opinion imagines) from its government, a countervailing duty must, absent a waiver by the Secretary, be imposed unless, in considering all circumstances surrounding the payment, certain deductions can be established resulting in no net benefit to that manufacturer. These deductions must be established by facts [16]—not by mere allegations of the foreign government or of the enterprises receiving the bounty or grant. Needless to say, without an adequate factual record, neither this court nor the Customs Court can perform a meaningful judicial review of countervailing duty determinations. [Emphasis supplied, footnote 16 omitted.]

[15-5] Section 771(6) of the Tariff Act of 1930, added by the Trade Agreements Act of 1979 and conditionally effective January 1, 1980, lists specific items that are deductible in determining the net subsidy. The list does not include "locational" expenses, and the Senate committee report states:

> The list is narrowly drawn and is all inclusive. For example, offsets under present law which are permitted for indirect taxes paid but not actually rebated, or for increased costs as a result of locating in an underdeveloped area, are not now permitted as offsets. . . .

S. Rep. No. 96-249, 96th Cong., 1st Sess. 86, reprinted in [August 1979] U.S. Code Cong. & Admin. News, pp.——,——. The House Committee report underscores that the list is all inclusive. H.R. Rep. No. 96-317, 96th Cong., 1st Sess. 74 (1979).

In light of the above the Court undertakes to evaluate plaintiff's claim that the bounties or grants it received were more than offset by the disadvantages of locating in Nova Scotia. In so doing it first must remove from the equation those benefits of the location which cannot be quantified, although it must be said that this immediately detracts from the completeness of the analysis. One advantage of the Nova Scotia location to Michelin Canada was that, unlike Ontario, it was not a stronghold of competitive interests and Michelin Canada could therefore expect, in general, closer cooperation from local government. Another advantage was that unlike Quebec, Nova Scotia was not troubled by a separatist movement, which would have presented special difficulties for a company with strong ties to France. Finally, the relatively remote location in Nova Scotia was an advantage in that it would be relatively easier to safeguard trade secrets upon which the success of Michelin depended. The existence of intangible benefits such as these raise the question of whether the CCPA's requirement, that all thee circumstances surrounding the transactions be considered, can ever be fully satisfied in a judical sense, in an overall anelysis of a location's advantages and disadvantages.

With these broae considerations put aside the Court turns to the specific disadvantages asserted by Michelin Canada. These fall into the general categories of transportation, energy, training, storage and taxation. Plaintiff's proof on this subject consisted of a report [Plaintiff's Exhibit 19] prepared by Arnaud d'Arbonneau, an employee of Michelin Canada and his related testimony.

Defendant's argument that offsets must be limited to the specific categories of the grants or bounties is rejected. Although these regional development programs may channel their aid into specific categories such as construction, it is abundantly clear that they are intended to compensate for a wide range of disadvantages of the region. A distinction must be recognized between the variety of problems which these programs are intended to alleviate over a prolonged period of time and the necessity of embodying the aid in a form which can be of practical use to a recipient. If offsets are to be considered, a fair evaluation must take into account the full range of disadvantages of the region and not limit itself to the nominal category of the grant. In addition, the language of the CCPA, upon which we rely here for guidance, speaks with reference to the general class of disadvantages which would discourage industry from moving to, and expanding in, less prosperous regions and does not confine itself to offsets which exactly correlate with the category of the grant.

The government and amicus also argued that Michelin would have located in Nova Scotia whether or not it received grants and there-

fore, as far as Michelin was concerned, the grants were incremental payments. In the opinion of the Court however, the evidence establishes that the grants were a significant consideration in Michelin's decision to locate in Nova Scotia and are the appropriate object of offsets, if they are proven.

The government's penultimate argument, that only those offsets ought to be considered which arose prior to the entry of the merchandise, is entirely without merit. The offsets are being considered not as relating to, or limited by these particular entries of merchandise, but rather as regards the entire underlying decision that bounties and grants were bestowed, that they represented a certain amount, that they should be allocated in a certain way and that a particular rate of countervailing duty should be applied. The offsets must be considered against the grants not just vis-a-vis a limited segment of production.

Accordingly, we arrive at the final position taken by the defendant and amicus, namely, that plaintiff has failed to prove the offsets it claims.

As was noted earlier these proposed offsets fall into five general categories, transportation, energy, training, storage and taxation.

Transportation is used here to describe first, transportation of the finished product from Nova Scotia to distribution warehouses, second, the transportation to Nova Scotia of raw materials from suppliers or "tissue" (a semi-finished product) from a Michelin plant in South Carolina, third, the transportation of semi-finished products between the two manufacturing facilities within Nova Scotia and fourth, somewhat more loosely, the travel of personnel between plants. Energy is used here to describe electricity, fuel oil and the related construction of fuel oil storage facilities. Training represents the establishment and conduct of a training school for production and maintenance personnel. Storage represents the maintenance of inventories of raw material supplies. Taxation refers to the sales tax applicable to certain items of equipment and machinery.

Plaintiff conceded the existence of two advantages to the location in Nova Scotia, lower construction costs and lower land costs. It maintained that the wages and salaries in Nova Scotia did not constitute an advantage.

Plaintiff calculated its disadvantages over a twenty year period to correspond with the period over which defendant allocated the grants.

For comparison purposes it discounted all amounts, including the sum of all the grants and bounties, to the value they would have had

best copy available

in 1972.[4] The dollar amount of the disadvantages calculated by plaintiff are as follows:

Disadvantages	Actual dollar value over 20-year period	1972 dollar value
Finished product transportation	$27, 498, 717	$12, 521, 660
Raw Material transportation	51, 028, 141	16, 425, 141
Transportation of tissue from U.S.	21, 011, 544	6, 538, 283
Interplant transportation	6, 459, 757	2, 175, 665
Interplant travel	1, 464, 103	504, 667
Electricity	37, 930, 961	12, 432, 859
Fuel	10, 917, 776	3, 589, 424
Fuel storage buildings	685, 600	685, 600
Training	14, 462, 895	4, 775, 045
Overstock	5, 470, 810	1, 795, 492
Taxation	498, 895	498, 895
Total disadvantages	$187, 429, 226	$61, 942, 731

[4] Plaintiff also made a comparison based on a 1969 date, at which time the surge of energy related costs in the mid-70s would not have been foreseeable. Accordingly, the 1969 figures show a somewhat lower ratio of costs to grants. In addition, the 1969 comparison was made only with grants which could reasonably have been expected in 1972. The Court considers the 1972 comparison to be the only proper one in that it treats all the asserted grants and bounties.

The offset calculation resulting from the deduction of the two advantages conceded by plaintiff is as follows:

	Dollar value over 20-year period	1972 dollar value
Total disadvantages	$187, 429, 226	$61, 942, 731
Advantages:		
Construction costs	5, 110, 379	5, 110, 379
Land costs	2, 900, 000	2, 900, 000
Total offsets	$179, 418, 847	$53, 932, 352

In sum, plaintiff claims that in 1972 dollar value it would experience cost disadvantages of $53,932,352 as a result of its location in Nova Scotia, an amount which exceeds the total of the grants and bounties found by defendant ($35,747,484) much less the discounted value of those grants and bounties in 1972 ($28,470,933).

The Court's study of the d'Arbonneau report and the related testimony and exhibits reveal serious deficiencies in its calculation of

offsets. The deficiencies persuade the Court that the report does not justify the reduction of the bounties and grants by offsets.

In brief, the principal weaknesses of the report are three: First, there was no proof that Michelin Canada paid for the cost of shipping its products to the United States. In fact there is strong evidence to the contrary from the invoices covering the entries in this case which show freight paid and billed to plaintiff. (Record at pp. 856–860) If Michelin Canada were not selling to a related company there might be more appeal to plaintiff's argument that from the point of view of a customer in the midwest of the U.S. paying transportation costs the total cost of a tire from Nova Scotia will have to be higher than from Ontario and this represents a disadvantage to Michelin Canada even though it does not pay the transportation itself. Even then, analysis would require a shift from analyzing production cost disadvantages to analyzing subsequent competitive disadvantages.

Since the measurement of general locational cost disadvantages is already a step beyond the measurement of whether a remitted amount is a *net* bounty, the Court would not enter into analyses of competitive disadvantages after production without the strongest indication in the law that this is a proper consideration in determining the amount of a net bounty.

On the present facts, since the buyer who is paying for the transportation of the tires is a related company and is not a potential customer for tires of other producers, even those with a lower transportation cost, it may be presumed that the actual disadvantage reveals itself as possibly a higher price when the product is ultimately sold in the United States. The disadvantage does not exist in the transaction between Michelin Canada and plaintiff. This ultimate disadvantage, if it occurs, cannot be transferred back from the plaintiff Michelin U.S. to Michelin Canada. Accordingly, the Court finds it incorrect to calculate a cost disadvantage to Michelin Canada based on the greater cost of transporting its finished product to the United States from Nova Scotia.

The second weakness in the offset calculations, and a devastating one, was the failure to account for an advantage from wages and salaries due to location in Nova Scotia. Defendant's Exhibit W, derived from Statistics Canada,[5] shows that wages in Nova Scotia were 81.3 percent of those in Ontario in 1973.

Unlike its evidence of most of the other cost disadvantages plaintiff's evidence of Michelin Canada's wages and salaries was not drawn directly or retrospectively from Michelin Canada's records. Instead, plaintiff offered a comparison derived from Statistic Canada

[5] *Statistics Canada* is a publication of the Canadian Government.

between wages at five-year intervals in manufacturing industries in Nova Scotia and a *combined* figure for Quebec and Ontario [Exhibit 19, page 22, Table I]. This showed Nova Scotia Wages as 78 percent of wages in Quebec-Ontario in 1971 and 89.9 percent in 1976. This rise was attributed by plaintiff to the settlement of Michelin Canada in Nova Scotia and its assertedly higher wages. In addition, plaintiff claimed that statistics from the Department of Development of Nova Scotia showed that Michelin paid more than 10 percent of the wages of the manufacturing work force of Nova Scotia although it employed less than 8 percent of the workers, meaning that its wages were at least 25 percent higher than the Nova Scotia norm. Finally, plaintiff attributed whatever difference might remain between Nova Scotia wages and those in Ontario to a greater proportion of high wage industries in Ontario, a proposition not demonstrated to the Court's satisfaction,[6] and of dubious importance if proved.

All this was indirect, convoluted and of questionable logical validity. It was no substitute for direct evidence and no match for the more straightforward statistical evidence offered by defendant that in 1973 manufacturing wages in Nova Scotia offered an approximately 19 percent advantage over Ontario [Defendant's Exhibit W]. Plaintiff's use of comparisons between Nova Scotia and Quebec-Ontario is noticeably defective. This went outside the comparison between Nova Scotia and Ontario alone, which had been maintained in other cost comparisons and unjustifiably introduced the effect of relatively lower wage rates in Quebec. It therefore could only understate the true wage differential between Nova Scotia and Ontario.

The statistics from the Department of Development of Nova Scotia showing Michelin Canada to be paying 10 percent of the province's wages to 8 percent of the workers are too skimpy to serve as proof and could be the result of other factors such as overtime wages.

Plaintiff made a strained argument that the wage rates of Michelin Canada could not be compared to those of other tire companies because of different job classifications. But this was not proved and is too important a point to be inferred merely from the opaque indications that Michelin Canada's operations are less reliant on handwork than their competitors.

The testimony of Mr. Ketterling, defendant's expert witness on industrial economics, established to the satisfaction of the Court that Michelin Canada obtained a wage advantage from locating in Nova Scotia and further, that this advantage outweighs all the other disadvantages it may have experienced [Defendant's Exhibits AA–1 and DD–1].

[6] Table II on page 23 of Exhibit 19 and the statistics on page 24 were the attempted proof of this proposition.

Plaintiff's evidence also was deficient in its accounting for its construction costs and training costs in Nova Scotia. Plaintiff conceded a construction advantage of $5,110,379 in 1972 dollars [Plaintiff's Exhibit 19, pp. 32, 37]. However, plaintiff's figures which again are convoluted and of questionable authority, assumed that construction workers in Nova Scotia were less productive than those in Ontario. This assumption was not proven and when the analysis is made without a reduction for lower productivity, as was done by defendant's witness Mr. Ketterling, the construction savings to Michelin Canada are closer to $11 million. (Record at pp. 1570–1571)

As to training cost plaintiff did not prove that the costs it incurred in Nova Scotia, although greater than in some European countries, were not equivalent to what they would have been in Ontario.

The magnitude of the wage advantage removes whatever disadvantages might have arisen in other cost categories. Obviously, it would not be possible to give plaintiff the benefit of those disadvantages which it did prove while ignoring those factors which outweigh the disadvantages. Nevertheless, for the sake of completeness it should be noted that plaintiff did prove the existence of disadvantages in a number of respects.

The transportation of raw materials from its suppliers and of tissue from Michelin's South Carolina plant were disadvantages of the location in Nova Scotia, as were the costs of maintaining a greater stock of the raw materials than would have been required in Ontario.

In reaching this conclusion the Court found acceptable the methodology employed by Mr. d'Arbonneau which was essentially to determine the pattern of shipments in 1978 and the comparative shipment costs between the suppliers and Nova Scotia and the suppliers and Toronto. He then calculated the differential for the years 1972 to 1977 taking into account the production during that period and the relevant shipping rates and projected the differentials forward to the twentieth year. The total of $51,028,141 was then discounted back to a 1972 value of $16,425,141.

The Court accepted plaintiff's proof that the receipt of natural rubber shipments in Nova Scotia, which might appear to be an advantage because of the proximity of the port of Halifax, was not an advantage. This resulted from the fact that the containers in which the rubber arrived could not be utilized for a return trip from Halifax due to the lack of departing cargo. Michelin Canada had to incur additional costs to ship the containers overland to Montreal.

The Court also accepted plaintiff's proof that it incurred additional costs in the transportation of semi-finished goods a distance of 150 miles between its two facilities in Nova Scotia. The placing of these

facilities so far apart was a direct result of the location in Nova Scotia in that the concentration of the labor force did not permit placing the factories in closer proximity. In Ontario the facilities would have been much closer, if not completely combined.

The Court was also persuaded that Michelin Canada bore additional costs of fuel and electricity in Nova Scotia, compared to the prospect that natural gas would be available and electricity would be cheaper in Ontario.

Overall however, the existence of a dramatic wage advantage, the unacceptability of plaintiff's proof of disadvantages in the costs of transportation of its finished product, together with its failure to adequately compute the construction advantage and its deficiencies of proof in such lesser items as training, lead to the conclusion that it did not provide a factual basis for finding that the benefits it received were offset by costs arising from its location in Nova Scotia. Although the evidence exceeded the "mere allegations" criticized by the CCPA in the *ASG* opinion it still fell short of proving the facts with reliable and accurate evidence.

This being the case, the determination of the amounts of the bounties and grants remains unchanged except for the required recalculation of the interest bounty. The final issue concerns the allocation of the bounties and grants to production.

Allocation

The interest bounty was allocated to production in each of the years in which it was received, as was the real estate tax bounty. Plaintiff attempted to relate these bounties to the acquisition of its capital assets and thereby justify allocating them over the useful life of those assets. Although it is true that the loan was for the purpose of constructing production facilities, it is also true that the interest bounty was experienced as an annual benefit and it is therefore not possible to say that its relation to construction ought to be preferred over its effect on Michelin Canada's annual financial condition. The relation of the property tax bounty to capital assets is tenuous and its allocation on an annual basis needs no defense.

A much more complex issue is presented by the allocation of the cash grants, a problem with which the previously discussed new loan agreement of June 1, 1972 is closely connected. The original IEL loan required that such capital grants as Michelin might subsequently receive under the Area Incentives Development Act would be applied to its principal and interest obligations on the loan.

The government allocated the grants over the period of time fixed by the original IEL loan schedule. Since the original schedule was 12 years for 68 percent of the loan and 20 years for 32 percent

of the loan, this resulted in 1/12 of 68 percent of each grant, together with 1/20 of 32 percent of each grant being allocated to each year and applied against the value of production for that year.

However, the new loan of June 1, 1972 freed Michelin Canada from the compulsory application of the grants to repayment of the original loan. Thus, whatever linkage may have existed between the grants and the loan period ended and, with it, ended the justification which might have existed for allocating the benefit of the grants over the period of the loan.

Plaintiff argues that the proper allocation for a grant given to construct production facilities is over the useful life of the facilities. In this action there was some proof that the useful life of these facilities was at least 40 years and further, that Michelin Canada did not utilize any forms of accelerated depreciation which might warrant finding a shorter life. Plaintiff asserts that its proposed allocation is consistent with general accounting principles.

While as a general proposition it is true that the allocation of funds should take place over the life of the assets they purchase, this principle cannot be automatically applied to bounties or grants on capital assets because of the possibility that benefits may have a disproportionately beneficial effect in the early years. In addition, there are special considerations in this case which prevent the Court from adopting plaintiff's position.

During the countervailing duty investigation the plaintiff did not disclose the new loan agreement, from which it now seeks to benefit. Although it *was* disclosed in the course of this judicial proceeding the Court finds two reasons for refraining from following the erosion of the justification for defendant's method of allocation to its logical conclusion. First, it would be inequitable to allow plaintiff to benefit at this juncture from conduct which may have partially disabled the defendant from investigating and proving other reasons for allocating the benefits over a period shorter than the useful life of the capital assets. The inequity is compounded when it is considered that the new loan agreement represented a possible additional bounty for which the government cannot obtain an increase of duty in this action. Second, the Court does not find in the record sufficient evidence of the correct period of useful life of the capital assets, which prevents it from reaching a fully informed conclusion if that period of allocation is adopted.

Nevertheless, it is clear that an important basis of defendant's allocation technique has been eliminated and the overall interests of justice require that a correct final determination be made. For this reason the Court considers it proper to remand the question of alloca-

tion to the Secretary of Commerce[7] to consider whether any justification exists for allocating the grants to a period shorter than the useful life of the capital assets or to determine the useful life of the assets if no shorter period is justified. In so doing, the Court exercises its power of remand under 28 U.S.C. § 2643 (b) and (c)(1). See, *Carlisle Tire and Rubber Company* v. *United States*, 1 CIT—, 517 F. Supp. 704, 708–9 (1981).

In its consideration of the allocation question, the Secretary of Commerce shall determine whether or not the benefits of the grants were experienced in earlier periods to a disproportionate extent and shall state the reasons upon which his conclusion is based. If he determines that the life of the capital assets is the proper period of allocation he shall determine that period and state the underlying reasons.

Although the legislative history of the Trade Agreements of 1979 has no direct connection to the interpretation of the law governing this action it nevertheless contains cogent statements regarding the considerations which should govern the allocation of grants for construction or capital equipment. In H. Rep. No. 96–317, 96th Cong., 1st Sess., pp. 74–75, we find the following statement:

> There is, however, a special problem with regard to subsidies which provide an enterprise with capital equipment or a plant. In such cases, the net amount of the subsidy should be amortized over a reasonable period, following the beginning of full scale commercial operation of the equipment or plant, and assessed in relation to the products produced with such equipment or plant during such a period. Furthermore, in calculating the *ad valorem* effect of non-recurring subsidy grants or loans, reasonable methods of allocating the value of such subsidies over the production or exportation of products benefitting from them will be used. Such methods should include relating the benefit of the commercial advantage to the recipient, or relating the value of a subsidy for acquiring assets to their anticipated useful life, based on generally accepted accounting principles.[8]

In a similar vein are the remarks in S. Rep. No. 96–249, 96th Cong., 1st Sess., pp. 85–86:

> There is a special problem in determining the gross subsidy with respect to a product in the case of nonrecurring subsidy

---

[7] The Secretary of Commerce took over the functions of the Secretary of the Treasury involving 19 U.S.C. § 1303 under Reorg. Plan No. 3 of 1979, § 5(a)(1)(C), 44 F.R. 69275, 93 Stat. 1381, eff. Jan. 2, 1980, as provided by section 1-107(a) of Exec. Order No. 12188, January 2, 1980, 45 F.R. 993.

[8] The Court notes in passing that the final sentence quoted from the House Report would appear to offer *two* alternative examples and its meaning is made clear if the first appearance of the word "of" in the sentence is changed to "to." The sentence would then read, "Such methods should include relating the benefit *to* the commercial advantage to the recipient, or relating the value of a subsidy for acquiring assets to their anticipated useful life, based on. . . ." This would correct grammatical and textual difficulties in the sentence as it appears in the report.

> grants or loans, such as those which aid an enterprise in acquiring capital equipment or a plant. Reasonable methods of allocating the value of such subsidies over the production or exportation of the products benefitting from the subsidy must be used. In particular, a reasonable period based on the commercial and competitive benefit to the recipient as a result of the subsidy must be used. For example, allocating a subsidy in equal increments over the anticipated 20-year useful life of capital equipment purchased with the aid of the subsidy would not be reasonable if the capital equipment gave the recipient of the subsidy an immediate significant competitive benefit compared to what would be the situation without the capital equipment and compared to the competitive benefit the equipment would likely provide in the later stages of its useful life.

In sum, the Court concludes that the basic determination that these importations benefitted from bounties or grants within the meaning of 19 U.S.C. § 1303 was correct. It concludes however, that the calculation of the bounty resulting from the IEL loan was incorrect and should have been derived from the difference between the loan interest rate of 6 percent and a prevailing rate of 7.56 percent rather than 8 percent. In addition, the Court concludes that the allocation of the grants to the period of the IEL loan was incorrect. For the recalculation of the loan interest bounty and for a redetermination of the allocation of the grants the matter is remanded to the Secretary of Commerce. The Secretary is directed to report his determinations to the Court within 120 days of this Order, following which the parties and amicus will have 30 days to file supplemental memoranda.

(Slip Op. 81–95)

NAKAJIMA ALL CO., LTD., PLAINTIFF *v.* THE UNITED STATES, DEFENDANT, CONSUMER PRODUCTS DIVISION, SCM CORP., INTERVENOR

Before NEWMAN, *Judge*.

Court No. 80–6–00933

Memorandum and Order

[Protective order granted to the parties concerning confidential information in administrative records; intervenor's motion to amend answer to state cross-claim denied.]

(Dated October 26, 1981)

Cabinet Hays, Esqs. (*Alan S. Hays*, Esq., of counsel) and *Paul, Weiss, Rifkind, Wharton & Garrison*, Esqs. (*Harriet L. Goldberg*, Esq., of counsel for the plaintiff.

J. Paul McGrath, Assistant Attorney General, *David M. Cohen*, Director, Commercial Litigation Branch, and *Velta A. Melnbrencis*, Esq., for the defendant.
Eugene L. Stewart and *Terence P. Stewart*, Esqs., for the intervenor.

NEWMAN, *Judge:* We are concerned here with several motions—parallel in some aspects, overlapping in other aspects—relating to an antidumping action affecting portable electric typewriters ("PETs") from Japan.

Before me are five applications:

1) Intervenor's motion for disclosure;
2) Intervenor's motion for a protective order;
3) Intervenor's motion to amend its answer to the complaint to state a cross-claim;
4) Plaintiff's cross-motion for a protective order;
5) Defendant's cross-motion for a protective order.

In this action, brought under section 516A of the Tariff Act of 1930, as amended (19 U.S.C. § 1516a), plaintiff contests the Government's antidumping duty determinations respecting PETs from Japan. Intervenor, a domestic manufacturer of portable typewriters, has moved for an order granting access to certain confidential documents included in the administrative records transmitted to the Court. These documents comprise questionnaires, reports, memoranda and other materials that were submitted to the International Trade Administration ("ITA") of the United States Department of Commerce and the International Trade Commission ("ITC") by manufacturers and importers of PETs during investigation No. 731–TA–12 (Final), culminating in the antidumping duty order published in the Federal Register on May 9, 1980 (45 FR 30618).

Intervenor further requests a protective order to prevent disclosure of certain documents in the administrative records transmitted to the Court containing confidential business information concerning intervenor. Additionally, intervenor has filed a motion to amend its answer to the complaint to state a cross-claim alleging that the ITA's determination of sales at less than fair value (LTFV) is contrary to law because it failed to use the "constructed value" method of calculating foreign market value pursuant to 19 U.S.C. § 1677(a)(2) and (3). Intervenor predicates its need to obtain disclosure of certain confidential documents sought by its motion on the constructed value theory asserted by the proposed cross-claim.

Plaintiff and defendant have filed cross-motions for a protective order restricting or precluding disclosure of certain of the documents contained in the administrative records, and join in opposing intervenor's attempt to amend its answer to interpose a cross-claim. Defendant does not object to intervenor's motion for a protective order. Plaintiff does not object to that branch of the intervenor's

motion for a protective order respecting intervenor's submissions to the ITC; but plaintiff objects to the granting of intervenor's proposed protective order covering documents submitted by intervenor to other Government agencies that have not been identified with specificity in plaintiff's motion or order.

Intervenor's Proposed Cross-Claim

Initially, we consider the intervenor's motion to amend its answer to interpose a cross-claim. As noted, *supra*, intervenor now wishes to assert in a cross-claim that the Commerce Department's LTFV determination was erroneous because Commerce failed to use the constructed value approach in determining foreign market value. Intervenor characterizes its proposed cross-claim as an attempt to uphold the ITA's determination, and provide an "alternative theory" upon which plaintiff may be kept within the scope of the final determination of LTFV sales.

Plaintiff and defendant urge that the proposed cross-claim does not purport to sustain the ITA's determination, but rather disputes the ITA's findings, conclusions and the LTFV determination as not supported by substantial evidence and as contrary to law. Viewing the intervenor's proposed cross-claim in this light, plaintiff and defendant maintain that the intervenor's belated attempt to challenge the ITA's determination is barred by the time limitation for seeking judicial review of antidumping determinations specified in section 516A(a)(2) of the Tariff Act of 1930, as amended. Plaintiff and defendant also argue that the intervenor has failed to allege "good grounds" for its proposed amendment to state a cross-claim which attempts to resurrect a position abandoned during the administrative proceedings.

First, I fully agree with the contention of plaintiff and defendant that the intervenor's proposed cross-claim is barred by the time limitation in section 516A(a)(2) for commencement of an action contesting the factual findings or legal conclusions upon which the LTFV determination was based. It is quite obvious from a reading of the intervenor's proposed amended answer and cross-claim and its supporting memoranda that the intervenor now seeks to contest the factual and legal basis for the Commerce Department's LTFV determination. Clearly, in view of the 30-day statutory time limitation, the intervenor's attempt to challenge the ITA's determination comes too late.

Section 516A(a)(2) provides that final affirmative determinations by the Commerce Department (as the administering authority) and the ITC must be challenged by a civil action commenced within

thirty days after the date of publication in the Federal Register of an antidumping or countervailing duty order based upon the determinations involved. Here, the Commerce Department's final affirmative determination regarding PETs from Japan was published on March 21, 1980 (45 FR 18416), the Commission's final material injury determination regarding PETs was published on May 7, 1980 (45 FR 30186), and the Commerce Department's antidumping duty order was published on May 9, 1980 (45 FR 30618). Consequently, under section 516A(a)(2) any civil action challenging the final affirmative determinations had to be commenced no later than June 8, 1980. The intervenor cannot circumvent the explicit statutory time limitation for contesting an antidumping duty determination by simply making a cross-claim when the time for commencing an action has expired.

Even by invoking the doctrine of relation back embodied in Rule 15(c) of the rules of this court,[1] the proposed cross-claim fails to meet the June 8, 1980 deadline for contesting the final antidumping duty order inasmuch as the complaint was filed on July 7, 1980 and intervenor's answer to the complaint was filed on August 14, 1980.[2]

And in any event, I agree with plaintiff and defendant that the intervenor has failed to show good grounds for the requested amendment. As evident from the Commerce Department's administrative record (Volume 2), the intervenor contended in its dumping petition that constructed value was the proper basis for determining fair value, but such contention was subsequently abandoned before the administrative authority. Plainly, plaintiff and defendant would be prejudiced if the intervenor were now permitted to revive its contention respecting constructed value which SCM (intervenor) abandoned during the administrative proceeding, thereby obviating any need on the part of the Commerce Department or plaintiff to proceed further as to that contention during the administrative proceedings.

In sum, although the statute confers upon interested parties "the right to appear and be heard as a party in interest" (section 516A(d)), and leave to amend is generally "freely given" (Rule 15(a)), an intervening party may not be permitted to contest an antidumping order in contravention of the time limitations imposed by section 516A(a)(2) and the jurisdiction of the court.

---

[1] Rule 15(c) reads: "Relation Back of Amendments. Whenever the claim or defense asserted in the amended pleading arose out of the conduct, transaction, or occurrence set forth or attempted to be set forth in the original pleading, the amendment relates back to the date of the original pleading. * * *"

[2] Although considering the dates presented here it is unnecessary to decide the question, it would appear that under Rule 15(c) allowance of the proposed amended answer to assert a cross-claim would relate back no further than the intervenor's original answer filed on August 14, 1980, well after June 8, 1980, the last date for contesting the final antidumpting duty order. It would be anomalous to hold that a cross-claim which would be untimely if interposed in an answer may nevertheless be raised in an amended answer on the theory that the claim in the amended answer relates back to the date of filing the complaint.

Disclosure

We turn to consideration of intervenor's motion for disclosure of certain documents in the administrative records which were accorded confidential treatment by either the ITA or the ITC in their respective antidumping duty investigations, and also to the cross-motions for a protective order sought by plaintiff and defendant.

It is noted that plaintiff and defendant do not object to release of many of the documents sought by the intervenor under the terms of its proposed protective order. However, objections by plaintiff and defendant remain to disclosure of many of the documents in question containing information regarding responses to questionnaires, prices and sales information, and cost data.

Defendant contends, understandably, that release of confidential business information would seriously discourage and hamper the submission of such information to the Government in the future, and thus hinder the informational basis of the administration of the antidumping law.

Plaintiff, understandably, objects to the disclosure of its cost of production, profits and other sensitive business data that could give its rivals an unfair competitive advantage.

Intervenor, understandably, objects to disclosure of its own confidential business information and submissions for the same reasons advanced by plaintiff.

Clearly, disclosure of confidential business information, such as that sought to be protected by the parties, may cause incalculable harm. Nonetheless, it cannot be questioned that there may be a need for disclosure of certain confidential business data in order to fully prepare and present a case.

Section 516A(b)(2)(B) of the Tariff Act of 1930, as amended, provides:

> (B) CONFIDENTIAL OR PRIVILEGED MATERIAL.—The confidential or privileged status accorded to any document, comments, or information, shall be preserved in any action under this section. Notwithstanding the preceding sentence, the count may examine, in camera, the confidential or privileged material, and may disclose such material under such terms and conditions as it may order.

It is evident from the foregoing statute that while the Court may, it need not, direct a disclosure of confidential business information. In determining whether to require disclosure of documents containing confidential business data, the Court must balance a party's need for the information sought against the public interest in protecting confidential business information, recognized by section 516A (b)(2)(B) and inherent in the administrative authority's ability to

effectively perform its investigative duties required by the Antidumping Act. Obviously, each case must be considered on its particular facts and circumstances in deciding whether confidential business data should be disclosed. Furthermore, under Rule 26(c) of the rules of this Court the Court may, in its discretion, impose protective conditions on the release of confidential information. *Cf. Melamine Chemicals, Inc.* v. *United States, et al.*, 1 CIT—, Slip–Op. 81–32 (1981); *Japan Exlan Company, Ltd., et al.*, 1 CIT—, Slip–Op. 81–43 (1981); *Atlantic Sugar Ltd., et al.* v. *United States*, 85 Cust. Ct. 114, C.R.D. 80–10 (1980); and *Connors Steel Co.* v. *United States*, 85 Cust. Ct. 112, C.R.D. 80–9 (1980).

I conclude that under all the circumstances, it is appropriate here to permit disclosure of most of the documents sought by intervenor in a manner that would allow the information to be examined and utilized by intervenor's outside counsel for the limited purposes of this litigation and to prohibit disclosure for any other purpose. Accordingly, it is ordered:

1. Intervenor's motion for disclosure of certain confidential information in the administrative records transmitted to the Court is granted to the following extent, and is denied in all other respects:

a. Within 15 days from the date of the entry of this order, defendant will make available to intervenor's outside counsel, the Law Offices of Eugene L. Stewart, at the offices of the ITA, United States Department of Commerce, a copy of the following documents contained in *Volumes 4 and 5 of the administrative record* transmitted to this Court in connection with the final determination of sales at LTFV made by the Department of Commerce regarding PETs from Japan, which documents are deemed confidential for purposes of this order, subject to the terms and conditions set forth in point c below:

Volume 4

(i) Pre-Conference Brief of Nakajima All, Ltd., dated 2/4/80;

(ii) Memorandum from Commissioner of Customs to General Counsel (Treasury), dated 12/5/79: Withholding of Appraisement and Tentative Determination, including that part of the Background Memorandum dealing with Nakajima All, but *exclusive* of that part of the Memorandum dealing with other manufacturers;

(iii) Memorandum to Mundheim from Ehrenhaft, dated 5/10/79: Initiation of Antidumping Investigation Portable Electric Typewriters from Japan;

(iv) Memorandum to Marcuss from Greenwald, dated 3/17/80: Final Affirmative Determination Portable Electric Typewriters from Japan; and

(v) Memorandum to General Counsel Treasury from

Commissioner of Customs, dated 5/1/79: Portable Electric Typewriters from Japan—Possible Dumping.

Volume 5

(i) Response to Antidumping Questionnaire, Undated; Response of Nakajima All, Ltd., to Antidumping Questionnaire (undated) (filed August 1, 1979), including exhibits thereto *except Exhibits D and E;*

(ii) Reports of Investigation, including Exhibits A–U, dated July 27, 1979: and

(iii) Handwritten notes to Lim, undated.

b. Within 15 days from the date of the entry of this order, defendant will make available to the intervenor's outside counsel, the Law Offices of Eugene L. Stewart, at the offices of the Secretary of the ITC, a copy of the following documents enumerated on List No. 2, Confidential Documents Transmitted to the United States Court of International Trade, part of the administrative record filed with the Court in this case in connection with the Commission's Inv. No. 731–TA–21 (Final): Portable Electric Typewriters from Japan, which documents are deemed confidential for purposes of this order, subject to the terms and conditions set forth in point c below:

(i) Document 19: Prehearing report: Portable Electric Typewriters from Japan, Investigation No. 731–TA–12 Marc 19, 1980;

(ii) Document 20: Transmittal form entering in the record "Confidential prehearing report to the Commission on Portable Electric Typewriters from Japan." Attachment: Prehearing Report to the Commission and Parties on Preliminary Findings of Fact: Portable Electric Typewriters from Japan, Investigation No. 731–TA–12 (Final), Washington, D.C., March 24, 1980;

(iii) Document 28: Transmittal form entering in the record the final Report to the Commission: Portable Electric Typewriters from Japan, Investigation No. 731–TA–12 (Final), Washington, D.C., April 14, 1980;

(iv) Document 29: Transmittal form entering into the record—Memorandum, 0P2–D–087, 4–9–80, regarding lost sales;

(v) Document 35: Transmittal form entering in the record the following: Report to the Commission: Portable Electric Typewriters from Japan, Investigation No. 731–TA–12 (Final), Washington, D.C., April 14, 1980;

(vi) Document 38: Transmittal form entering in the record the Chronological Chart and Pros and Cons (excluding the Chronological Chart and Pros and Cons);

(vii) Document 39: Chronological Chart; and

(viii) Document 41: Transcript of Commission Meeting, April 22, 1980: Briefing (CLOSED SESSION). Portable Electric Typewriters from Japan (Investigation No. 731–TA–12 (Final)).

c. The documents listed in points a and b above are to be made available subject to the following protective terms and conditions:

1) Outside counsel for intervenor shall not disclose the confidential information to anyone other than the immediate office personnel actively assisting in this litigation; and in no event shall outside counsel disclose the confidential information to intervenor or its in-house counsel or other representatives, agents, or employees;

2) Outside counsel for intervenor and counsel's immediate office personnel shall not disclose or use any of the confidential information for purposes other than this litigation; and

3) Any documents, including briefs and memoranda, which are filed with the Court in this case containing any of the confidential information shall be conspicuously marked as follows: " 'Confidential'—Subject to Protective Order. This contains material filed by (*name of party*) for the purpose of this litigation only. It is not to be opened other than by the Court, nor are the contents hereof to be displayed or revealed other than to the Court, except by Court Order or by agreement of the parties."

Arrangements shall be made with the Clerk of this Court to retain such documents under seal, permitting access only to the Court, Court personnel authorized by the Court to have access, and counsel for the parties; copies of all the foregoing documents, but with the confidential information deleted, shall be filed with the Court at the same time that the documents containing the confidential information are filed.

4) Any brief or memoranda containing confidential information shall be served by or upon intervenor in a wrapper conspicuously marked on the front "Confidential—to be opened only by (the names of the attorneys handling the case)," and shall be accompanied by a separate copy from which the confidential information has been deleted.

5) If it should become necessary to introduce in evidence any documents containing the confidential information, counsel for the respective parties may propose whatever mechanism may be available and appropriate to limit publication of the documents to an extent no wider than is necessary for purposes of this litigation.

6) Upon conclusion of this litigation, counsel for intervenor shall return all documents containing confidential information to counsel for the defendant United States, and any copies made of such documents, including any documents or copies held by persons authorized under this order to have access thereto, except for copies which contain

work notes of counsel for intervenor (or authorized personnel) which shall be destroyed.

2. Intervenor's motion for a protective order is granted to the extent that all confidential business documents transmitted to the Court by the ITC and annexed to the Certificate subscribed and sworn to by Kenneth R. Mason on July 24, 1980 will be retained under seal by the Clerk of this Court, and access permitted to this Court only. In all other respects, intervenor's motion for a protective order is denied.

3. Intervenor's motion to amend its answer to the complaint to state a cross-claim is denied.

4. and 5. The cross-motions of plaintiff and defendant are granted to the extent that they are consistent with the foregoing provisions of this order, and are denied in all other respects.

(Slip Op. 81–96)

AMERICAN AIR PARCEL FORWARDING COMPANY, LTD., A HONG KONG CORPORATION, PLAINTIFF *v.* UNITED STATES, DEFENDANT

Before LANDIS, *Judge.*

Court No. 81–4–00428

Memorandum Opinion and Order

(Dated October 27, 1981)

Richard A. Kulics and *Goodman, Miller & Miller* of counsel by *Jonathan Miller* for the plaintiff.

J. Paul McGrath, Acting Assistant Attorney General; by *Joseph I. Liebman,* Attorney in Charge, International Trade Field Office, Commercial Litigation Branch and *Susan L. Handler-Menahem* of counsel, for the defendant.

LANDIS, *Judge:* Defendant United States moves, pursuant to Rule 7, for an order dissolving a preliminary injunction by Chief Judge Re on April 27, 1981, as amended by Chief Judge Re on May 15, 1981. On July 28, 1981 this action was assigned to me pursuant to Rule 77(d).

The instant motion, brought on by an order to show cause, was originally set for hearing on September 15, 1981. Said date was adjourned until September 17, 1981. On that date, the hearing was continued until October 15, 1981 by order of the Court. The parties reached an agreement as to the terms of entry during this continuance period. These terms were incorporated in the Court's order of September 17, 1981.

On October 15, 1981 the Court held a hearing on the motion. The Court extended its order of September 17, 1981 pending decision on

the instant motion. The following day, October 16, 1981, the Court held another hearing at the behest of the parties to clarify its order of the previous day.

Subsequent to the October 15 and 16 hearing dates the Court was informed that plaintiff obtained a replacement term bond in the amount of $150,000. A copy of this bond and supporting documents were received by the Court on the afternoon of October 21, 1981. The parties reached an agreement on October 21, 1981 and I orally entered the following order at 5:30 p.m. EDT (which was conveyed to both parties telephonically).

In the above-entitled proceeding the Court hereby issues the following decision and order.

Defendant's motion to dissolve the preliminary injunction order of May 15, 1981 is denied as being moot.

Accordingly, it is

ORDERED, that pursuant to the agreement of the parties:

(1) the plaintiff will continue to file single entry bonds and will continue to maintain its term bond on file with the Director of Customs, Detroit, Michigan, in the amount of 150,000 dollars;

(2) the said plaintiff shall maintain a bond in the amount of 25,000 dollars with the Court of International Trade in accord with Rule 65(c) of this Court to secure defendant with costs and damages.

This order is effective immediately.

(Slip Op. 81-97)

MELAMINE CHEMICALS, INC., PLAINTIFF *v.* UNITED STATES, DEFENDANT

Before LANDIS, *Judge.*

Court No. 80-6-00878

ORDER

(Dated October 27, 1981)

Baker & McKenzie (*Bruce E. Clubb* and *Ava A. Zydor* on the brief) for the plaintiff.

J. Paul McGrath, Acting Assistant Attorney General; *David M. Cohen*, Director, Commercial Litigation Branch (*Francis J. Sailer* on the brief) for the defendant.

Upon motion by plaintiff for an order, pursuant to Rule 56.1, directing that the above-entitled action be submitted for determination by a motion for review of the administrative determination upon the agency record, defendant's response thereto and cross-motion to

suspend and stay, and plaintiff's response thereto, and upon all papers and proceedings had therein, and upon due deliberation, it is hereby

ORDERED, that plaintiff's motion be granted and defendant's cross-motion be, in all respects, denied; and that this action shall be submitted for determination as prescribed by Rule 56.1; and it is further

ORDERED, that plaintiff serve and file their motion and brief within twenty (20) days of service of this order; and it is further

ORDERED, that defendant shall respond to said motion within thirty (30) days after service of plaintiff's motion and brief; and it is further

ORDERED, that plaintiff may serve a reply within ten (10) days of defendant's service of response.

(Slip Op. 81–98)

WILLIAM F. JOFFROY, INC, R & L PRODUCE, PLAINTIFF *v.* THE UNITED STATES, DEFENDANT

Consolidated Court No. 76–1–00225

Memorandum and Order

[Motion for reconsideration granted; motion for suspension granted]

(Dated 29 October, 1981)

Glad Tuttle & White (*Stephen S. Spraitzar*, Esq. of Counsel) for plaintiff.

J. Paul McGrath, Assistant Attorney General, *Joseph I. Liebman*, Attorney in Charge, International Trade Field Office, *Susan Handler-Menahem*, Esq. for defendant.

WATSON, *Judge:* The Court is of the opinion that it may be useful to briefly express the considerations which guided its exercise of discretion in reconsidering its denial of plaintiff's motion for suspension and in ultimately granting the motion.

Suspension under a test case is a procedure which holds the promise of disposing of actions in a very efficient manner. In proper cases, therefore, its use ought to be encouraged. The slight inefficiency of having the Court consider the question of suspension a second time is outweighed by the increased likelihood of disposition if suspension is found to be proper.

These considerations differ from the factors involved when reconsideration is sought of some final or dispositive decision. In the latter case there is no policy reason to encourage the revival of litigation

and it takes something in the nature of a demonstration that an injustice has occurred to justify a reconsideration. *W. J. Byrnes & Co., Inc., Crown Florist Supply et al.* v. *United States*, 68 Cust. Ct. 358, C.R.D. 72-5 (1972).

The Court treated plaintiff's motion for a rehearing as a motion for reconsideration pursuant to Rules 1 and 7 of the Rules of the United States Court of International Trade. In the motion, plaintiff demonstrated overwhelmingly that there is a high degree of similarity between the factual and legal issues involved in this dispute over the value of cantaloupes imported from Mexico and the issues in the test case of *Walter Holm, et al.* v. *United States*, Court No. R67/1324–94 which was tried in May and is now being briefed. Although the plaintiff conceivably could have made as persuasive a demonstration in its first motion that failure is not as important as the overall encouragement of the efficient disposition of cases.

For the above reasons, upon reading and filing plaintiff's motion to reconsider the denial of suspension and upon all other papers and proceedings had herein, and upon due deliberation, it is hereby

ORDERED, ADJUDGED, and DECREED that the order denying plaintiff's previous motion to suspend the above captioned action is vacated and set aside, and it is hereby

ORDERED, ADJUDGED, and DECREED that the captioned action be suspended under the test case of *Walter Holm, et al.* v. *United States*, Court No. R67/1324–94.

(Slip Op. 81–99)

INDUSTRIAL FASTENERS GROUP, AMERICAN IMPORTERS ASSOCIATION, PLAINTIFF *v.* THE UNITED STATES, ET AL., DEFENDANT

Before Boe, Judge.

Count No. 80–7–01157

Opinion and Order

[Determination by International Trade Administration affirmed in part. Remanded to agency for provision of additional information.]

(Dated October 29, 1981)

Barnes, Richardson & Colburn (*Andrew P. Vance* and *Michael A. Johnson* on the briefs) for the plaintiff.

J. Paul McGrath, Assistant Attorney General; *David M. Cohen*, Director, Commercial Litigation Branch (*Velta A. Melnbrencis* on the brief), for the defendants.

BOE, *Judge:* Plaintiff, an association of importers and wholesalers of industrial fasteners manufactured in India, brings this action under 19 U.S.C.A. §1515(a)(2)(A)(ii), §1516a(2)(B)(i), contesting the final

affirmative countervailing duty determination and order by the International Trade Administration (ITA), United States Department of Commerce, in *Certain Fasteners From India*, 45 Fed. Reg. 48607 (published July 21, 1980).

On February 25, 1980, a notice of the Initiation of Countervailing Duty Investigation was published in the Federal Register, advising:

> that a satisfactory petition has been received and as a result an investigation is being started [by the ITA] for the purpose of determining whether or not benefits are granted by the Government of India [GOI] to manufacturers, producers, or exporters of certain industrial fasteners [covered under item numbers 646.49, .54, .56, .58, .60, .63, TSUS] constitute a bounty or grant within the meaning of the countervailing duty law.

Having concluded that India was not a "country under the Agreement" within the meaning of 19 U.S.C.A. §1671(b), the ITA determined that the investigation was governed by §303 of the Tariff Act of 1930, as amended by the Trade Agreements Act of 1979, 19 U.S.C.A. §1303, and accordingly, the investigation would not be referred to the International Trade Commission (ITC) for injury determinations. 45 Fed. Reg. 12276.

On July 21, 1980, the ITA published the countervailing duty determination and order appealed from in the instant action, in which the ITA determined that "the Government of India provides bounties or grants (subsidies) within the meaning of section 303 of the Act and that the estimated aggregate net amount of these benefits equals 18.0% of the f.o.b. value of the exported merchandise." The customs officers were directed to assess a countervailing duty on imports covered by the determination pursuant to 19 U.S.C.A. §1671e.

The proceedings in this court were commenced by the filing of a summons and complaint on July 28, 1980. Plaintiff, on the same date, made application to this court for a Temporary Restraining Order and preliminary injunction, which were granted on July 28, 1980 and August 7, 1980, respectively. Pursuant to the preliminary injunction, the Customs Service was enjoined from liquidating merchandise pursuant to the cuntervailing duty order of July 21, 1980.

This civil action was submitted for determination pursuant to the expedited review procedure of Rule 56.1 of the United States Court of International Trade Rules.

The ITA has determined in its final determination that the Government of India provided subsidies to exporters of certain industrial fasteners through three programs: (1) Cash Compensatory Support on Export (CCS), providing a lump-sum payment of 17.5% of the f.o.b. value of the exported merchandise; (2) Preferential Export Financing, whereby the GOI had underwritten low interest packing

credit loans to exporters by making grants of 1.5% of the interest rate to lending institutions, amounting to a subsidy of 0.4% of the f.o.b. value of the exported merchandise; (3) Tax Deductions, providing special income tax deductions of 133% of certain expenses incurred in export market development, amounting to a subsidy of 0.1% of the f.o.b. value of the exported merchandise.

Notwithstanding the several assignments of error asserted by plaintiff in its Motion for Judgment on the Administrative Record the central dispositive question to be decided herein in reviewing the ITA's determination with respect to the CCS payments, is whether there is substantial evidence in the administrative record to support the conclusion that the CCS payments to exporters of fasteners are not non-excessive rebates of indirect taxes not otherwise rebated on export, and, accordingly, are subsidies.

According to the information submitted by the Government of India, in October 1978 the Ministry of Commerce advised all Export Promotion Councils (EPCs) that it was restructuring the export payment programs and that the Ministry had decided that CCS should fully compensate for all types of indirect taxes which exporters pay on "inputs" and which are not otherwise refunded. AR. 70. However, the letter from the Ministry advising the EPCs of such restructuring (to which was appended a "proforma" [questionnaire]) stated that the main objective of the CCS should be to help neutralize handicaps faced by Indian exporters, vis-à-vis their foreign competitors, in the form of (i) indirect taxes on "inputs," (ii) higher rate of interest payable on working capital employed on export production, and (iii) higher cost of domestic capital goods used on export production. AR. 879. In addition to the foregoing three types of handicaps, the Ministry advised of other broad criteria that would likely be accepted in the formulation of the new CCS rates.[1] AR. 880. The EPCs (including the Engineering Export Promotion Council [EEPC], representing industrial fastener exporters) were requested to collect, compile, verify and make available to the Ministry basic data in regard to all the products with which they are concerned, the data to be collected from a representative number of manufacturing and exporting units throughout the country. AR. 71, 878, 880. The representative manufacturers/exporters were to work out the average incidence of the various non-refundable taxes, duties and levies imposed on "inputs" entering the exported products. AR. 71. However, the "proforma" appended to the Ministry's letter to the EPCs demonstrates that the scope of the data to be supplied by the representative manu-

[1] These include: (iv) labour intensive industries; (v) products of SSI (Small Scale Industries) and cottage sector; (vi) new products in new markets; (vii) selected processed food, horticulture and agricultural products; (viii) commodities and markets which suffer from high and discriminatory freight rates.

facturing/exporting units was more extensive than just the incidenee of indirect taxes, duties and other levies on "inputs." Rather, the "proforma" requested information with respect to the eight broad criteria afore-referred to. AR. 882–91. The Government of India has stated that the tax data was scrutinized by the Ministry and that the CCS was based directly on the calculations and documentation provided by EPC members. AR. 71.

The CCS payment for industrial fasteners originally was set at 12.5%. The industrial fastener manufacturers, however, objected to that rate as being too low to compensate for all indirect taxes and levies and the Ministry announced in March 1979 the higher payment rate of 17.5%. The new payment rates which became effective April 1, 1979, were in most cases, to remain in effect for three (3) years. AR. 434. Counsel for the EEPC submitted to an ITA official, during the course of her duties in verifying information in India, documents from six (6) Indian industrial fastener firms (one unidentified) and an industry group, providing tax calculations, which, counsel asserts,

> were done in *1978/79* for the express purpose of setting cash compensatory support for industrial fasteners. These calculations were submitted to the Ministry of Commerce by the Engineering Export Promotion Council and were the basis for the CCS granted in 1979. [Emphasis in original.]

AR. 441–42.

19 U.S.C.A. §1303, as amended, governs the imposition of countervailing duties on merchandise which is the product of a country other than a "country under the Agreement" within the meaning of 19 U.S.C.A. §1671(b). Section 1303(b) provides that the countervailing duty imposed under §1303(a) "shall be imposed, under regulations prescribed by the administrative authority (as defined in [19 U.S.C.A. §1677(1)]), in accordance with [19 U.S.C.A. §§1671-1677g, as added by the Trade Agreements Act of 1979] (relating to the imposition of countervailing duties).[2]

In the Senate Committee Report to the Trade Agreements Act of 1979, the following comments were made with respect to the amendments made to § 1303 by the 1979 Act, S. Rep. No. 96–249 at 104:

> The committee believes the procedures and standards under new [§§ 1671–1677g] are a significant improvement over existing law and practice and should be applied to [§ 1303].

It clearly was the intent of Congress that those provisions of the Trade Agreements Act of 1979 relevant to countervailing duty in-

[2] Section 1303(b) prescribes that certain countervailing duty investigation procedures added by the Trade Agreements Act of 1979 are not applicable to investigations governed by § 1303. Most notably, injury determinations by the ITC are not made in §1303 investigations. The court concludes, however, that none of these exceptions are applicable to the disposition of the action herein.

vestigations be applied to investigations governed by § 1303, with the exceptions noted.

The statutory standard for the imposition of countervailing duties is provided in § 1671(a), which states in pertinent part:

> (a) General rule.—If—
>
> (1) the administering authority determines that—
>
> (A) a country under the Agreement, or
>
> (B) a person who is a citizen or national of such a country, or a corporation, association, or other organization organized in such a country,
>
> is providing, directly or indirectly, a subsidy with respect to the manufacture, production, or exportation of a class or kind of merchandise imported into the United States, . . .
>
> then there shall be imposed upon such merchandise a countervailing duty, in addition to any other duty imposed, equal to the amount of the net subsidy.

The term "subsidy" is defined in §1677(5), providing in relevant part:

> (5) Subsidy.—The term "subsidy" has the same meaning as the term "bounty or grant" as that term is used in section 1303 of this title, and includes, but is not limited to, the following:
>
> (A) Any export subsidy described in Annex A to the Agreement [on Subsidies and Countervailing Measures] (relating to illustrative list of export subsidies).

The definition of "net subsidy" is provided in §1677(6):

> (6) Net subsidy.—For the purpose of determining the net subsidy, the administering authority may subtract from the gross subsidy the amount of—
>
> (A) any application fee, deposit, or similar payment paid in order to qualify for, or to receive, the benefit of the subsidy,
>
> (B) any loss in the value of the subsidy resulting from its deferred receipt, if the deferral is mandated by Government order, and
>
> (C) export taxes, duties, or other charges levied on the export of merchandise to the United States specifically intended to offset the subsidy received.

The legislative history to the Trade Agreements Act of 1979 provides insight into the standards set by the terms aforedefined and their relationship to the law then in effect.

> The definition of "subsidy" is intended to clarify that the term has the same meaning which administrative practice and the courts have ascribed to the term "bounty or grant" under section 303 of the Tariff Act of 1930, unless that practice or interpretation is inconsistent with the bill. In this regard, the restrictions on offsets contained in section 771(6) of the Tariff Act of 1930, as added by this bill [§1677(6)], are not intended to prohibit the authority from determining that export payments

> are not subsidies, *if those payments are reasonably calculated, are specifically provided as non-excessive rebates of indirect taxes within the meaning of Annex A of the Agreement, and are directly related to the merchandise exported* * * *
>
> * * * The term "net subsidy" is not used in the existing countervailing duty law, section 303 of the Tariffic Act of 1930. Under section 303, the Secretary of the Treasury does determine the "net amount" of a bounty or grant, but this phrase is undefined Under current practice, the Secretary determines the net amount by subtracting from the gross amount of the bounty or grant used certain "offsets," such as indirect taxes on items physically incorporated in the exported product but not rebated upon export * * *
>
> * * * * * * *
>
> * * * The bill [later enacted as the Trade Agreements Act of 1979] defines the term "net subsidy" to place clear limits on offsets from a gross subsidy. The gross subsidy is the value of the subsidy provided, or made available, and used. For example, if a firm is eligible for a tax credit as a result of locating a plant in an underdeveloped region of a country, the gross subsidy may be determined by the extent to which the credit is used against taxable income.
>
> * * * * * * *
>
> For purposes of determining the net subsidy, there is subtracted from the gross subsidy only the items specified in section [1677(6)]. The list is narrowly drawn and is all inclusive For example, offsets under present law which are permitted for indirect taxes paid but not actually rebated, or for increased costs as a result of locating in an underdeveloped area, are not now permitted as offsets. In determining the amount of offsets which are permitted, it is expected that the administering authority will only offset amounts which are definitively established by reliable, verified evidence. [Emphasis supplied.]

In analyzing the CCS program instituted by the Government of India, the ITA framed the issue as follows:

> Can CCS payments to exporters of fasteners reasonably be considered non-excessive rebates of indirect taxes not otherwise rebated on export? If so, they are not subsidies within the meaning of the countervailing duty law; if not, they are subsidies.

The ITA thereupon construed the statutory provisions and legislative history thereto as requiring a three-prong test in determining whether export payments purportedly operating as a rebate of indirect taxes paid but not otherwise rebated are subsidies:

> (1) whether the [export payment] operates for the purpose of rebating indirect taxes, (2) whether there is a clear link between eligibility for [export] payments and payment of indirect taxes, and (3) whether the government has reasonably calculated and documented the actual indirect tax incidence borne by

> exported fasteners and has demonstrated a clear link between such tax incidence and the amount of the [export payment].

In considering the weight to be given the Treasury Department's interpretation of the countervailing duty statutes then in effect, the United States Supreme Court stated in *Zenith Radio Corp.* v. *United States*, 437 U.S. 443, 450 (1978):

> "When faced with a problem of statutory construction, this Court shows great deference to the interpretation given the statute by the officers or agency charged with its administration. 'To sustain [an agency's] application of [a] statutory term, we need not find that its construction is the only reasonable one, or even that it is the result we would have reached had the question arisen in the first instance in judicial proceedings.'" [Citations omitted.]
>
> Moreover, an administrative "practice has peculiar weight when it involves a contemporaneous construction of a statute by the [persons] charged with the responsibility of setting its machinery in motion, of making the parts work efficiently and smoothly while they are yet untried and new." [Citations omitted.]
>
> The question is thus whether, in light of the normal aids to statutory construction, the Dipartment's interpretation is "sufficiently reasonable" to be accepted by a reviewing court. [Brackets in original.]

This court concludes, based upon its examination of the Trade Agreements Act of 1979, the legislative history thereto, and the changes effected in the prior countervailing duty statutes by the 1979 Act, that the ITA's three-prong test consisting of three lines of inquiries, all of which must be answered in the affirmative in order to find that an export payment purportedly made as a rebate of an indirect tax not otherwise rebated is not a subsidy, is a "reasonable" interpretation of the requirements of the countervailing duty statutes.

The ITA determined that the CCS program had not satisfied the requirements for a non-excessive rebate of indirect taxes set out in its three-prong test: Since the Government of India has not satisfactorily demonstrated the requisite linkage between the indirect tax incidence and the level of CCS payments, nor has shown that the actual indirect tax incidence has been reasonably calculated and documented, we have concluded that, in this case, the CCS payments must be considered a subsidy program and have found the amount of subsidy to be 17.5% of the f.o.b. value of the exported merchandise.

In order to demonstrate that the CCS payment is indeed a non-excessive rebate of indirect taxes, it must be shown that the level of said payment which the Government of India has decided to make to the fastener exporters reflected the calculation of the actual incidence of indirect taxes borne by the fastener exporters. It is apparent from its final determination that the ITA concluded that the proper time

frame necessary to establish the requisite linkage between the indirect taxes paid but not otherwise rebated and the level of CCS payments must be that time at which the CCS payment rate of 17.5% of the f.o.b. value of the exported merchandise was set. The level of CCS payments made did not vary on a case by case basis depending upon the indirect tax incidence borne by each fastener exporter requesting a CCS payment. Rather, the fastener exporters were eligible and, accordingly, received the fixed lump-sum payment of 17.5% of the f.o.b. value of the exported merchandise which was made effective April 1, 1979, and was expected to continue in effect for three years. Where the administrative record is silent, as in the present proceeding, with respect to the efforts of the Government of India to review or reevaluate the CCS rate of 17.5% at any time after it had been originally established, the time frame utilized by the ITA in its effort to establish the requisite linkage between indirect taxes paid but not otherwise rebated and the level of the CCS payments was proper.

The ITA requested the Government of India for the "data" utilized, and the calculations made thereon, which resulted in the establishment of the CCS payment rate of 17.5%. The information apparently was never provided. AR. 23—Supplemental Countervailing Duty Questionnaire; AR. 435—Verification Report. The only factual information provided relating to the link between the calculation of the amount of the CCS rate established by the Ministry of Commerce and the amount calculated by the Ministry to be the actual indirect taxes paid but not otherwise rebated were certain documents submitted by counsel for the trade association (EEPC) to the Ministry, showing tax calculations of six industrial fastener firms and one industrial association, Fabricated Steel Structural Panel, which latter calculation provided aggregate data on the indirect tax burden of firms exporting anchor bolts. The indirect tax data so submitted shows a wide range of tax payments: 9.38%; 10.62%; 11.63%; 14.7%; 20.9%; 26.35% (percentages of the "f.o.b. realisation of the finished product"). AR. 444–49, 452–61.[3] Were it to have been assumed by the ITA that the calculation of the individual taxes paid but not otherwise rebated were based solely on the foregoing tax calculations, the absence of information as to the manner in which this data was treated by the Ministry would necessarily preclude a finding by the ITA that such taxes were reasonably calculated or that a clear link existed between the said taxes and the 17.5% rate established for the CCS payments.[4] It is worthy of note that the "proforma" submitted

---

[3] On the face of it, there is no patent correlation between th is data and the 17.5% CCS rate.

[4] No evidence was submitted as to the weight given to the respective tax figures in the calculation of the actual indirect tax rate nor as to whether the Ministry did choose to rebate all of the indirect taxes included in the tax calculations.

by the counsel for the EEPC in behalf of the respective individual companies and the industrial association, aforementioned, in fact affirmatively evidenced that exported fasteners satisfied other criteria compensable under the CCS program. It appears that some of the exported products were produced in the "small scale sector" and to some degree production was "labour intensive." AR. 444–61. Counsel for the EEPC also admitted that the variance between the CCS rate for exports to the American continent and exports to other destinations 17.5% and 12.5%, respectively, was due to the more stringent packing requirements for shipments to North America. In so doing, it is noted that counsel did not contend that the 5% differential was entirely due to indirect taxes placed on these additional packing requirements.

From a review of the record herein, it appearing:

> (1) that the evidence clearly establishes that there may be criteria other than indirect taxes paid which are compensable by the CCS rate, and
>
> (2) that the evidence fails to establish what portion of the 17.5% CCS payment has been allocated to compensate for indirect taxes paid as opposed to that portion allocated to compensate for other criteria, and
>
> (3) that the evidence fails to establish the actual incidence of indirect taxes on which to base the CCS payments,

any determination by the ITA as to the extent the CCS payments represented a rebate of indirect taxes paid would be mere speculation. Where, as in the instant proceeding, the data necessary to establish a factual basis for the requisite linkage between indirect taxes paid and the established CCS payment rate is in control of those opposing the imposition of a countervailing duty, and where information requested by the ITA has not been provided, it was not inappropriate for the ITA to impose a countervailing duty in the full amount of the export payment. *See ASG Industries, Inc.* v. *United States*, 610 F. 2d 770, C.A.D. 1237 (1979).

The standard of review of a final determination made by the ITA is set forth in 19 U.S.C.A. § 1516a(b) which provides in relevant part:

> (1) Remedy.—The court shall hold unlawful any determination, finding or conclusion found — . . .
>
> (B) in an action brought under paragraph (2) of subsection (a) of this section, to be unsupported by substantial evidence on the record, or otherwise not in accordance with law.

In *Consolo* v. *Federal Maritime Commission*, 383 U.S. 607, 619–20 (1966), the Court defined "substantial evidence" as

> something less than the weight of the evidence, and the possibility of drawing two inconsistent conclusions from the evidence does not prevent an administrative agency's finding from being supported by substantial evidence.

The determination by the ITA that a subsidy was paid to the exporters of industrial fasteners in the amount of 17.5% of the f.o.b. value of the exported merchandise, accordingly, is supported by substantial evidence and, accordingly, affirmed.[5]

Plaintiff also challenges as unsupported by the record or de minimis the determinations by the ITA that the GOI is providing subsidies in the form of packing credit loans and special income tax deductions for export market development in the amounts of 0.4% f.o.b. value and 0.1% f.o.b., respectively. In neither case, however, has the ITA presented this court with a sufficient basis on which to review the ITA's determination. It is necessary that the court be provided with the data utilized in the calculations by the ITA. The court does not sit as a finder of fact with respect to the administrative record presented to it for review. That is the role of the administrative agency. The court's role is to review the fact-finding done by the administrative agency and the legal conclusions reached by the agency's application of legal principles to those facts, and to determine whether those findings and legal conclusions are supported by substantial evidence and are in accordance with law. The failure of the ITA to provide the court with the basis of its determination precludes the court from fulfilling its statutory obligation on review. The court, accordingly, remands the within action to enable the ITA to provide a more explanatory basis on which the packing credit loan and the income tax deduction subsidies have been determined. Such additional information shall be submitted to the court within a period of thirty (30) days from the date of entry of this order.

---

[5] The foregoing basis of this court's affirmance of the ITA's determination renders it unnecessary to address the other contentions of plaintiff attacking the determination of the entire CCS payment as a subsidy.

Decisions of the United States Court of International Trade

Abstracts

Abstracted Protest Decisions

DEPARTMENT OF THE TREASURY, *November 2, 1981.*

The following abstracts of decisions of the United States Court of International Trade at New York are published for the information and guidance of officers of the Customs and others concerned. Although the decisions are not of sufficient general interest to print in full, the summary herein given will be of assistance to Customs officials in easily locating cases and tracing important facts.

WILLIAM VON RAAB,
Commissioner of Customs.

DECISION NUMBER	JUDGE & DATE OF DECISION	PLAINTIFF	COURT NO.	ASSESSED	HELD	BASIS	PORT OF ENTRY AND MERCHANDISE
				Par. or Item No. and Rate	Par. or Item No. and Rate		
P81/179	Rao, J. October 30, 1981	Geoffrey Beene, Inc.	79-11-01727	Item 546.54 30%	Item 545.11 5%	Agreed statement of facts	New York Perfume bottles produced by automatic machines
P81/180	Rao, J. October 30, 1981	Pussy Cat Toy Co., Inc.	80-1-00068	Item 737.25 28%	Item 737.30 9%	Agreed statement of facts	New York Stuffed toy hugging mother and baby bears
P81/181	Richardson, J. October 30, 1981	Sortex Co. of North America, Inc.	79-6-01015, etc.	Item 712.49 10%	Item 666.25 5.5%	Sortex Co. of North America, Inc. v. U.S. (C.D. 4746, aff'd C.A.D. 1221)	Detroit Electronic color sorting machines, and parts thereof

Decisions of the United States Court of International Trade

Abstracts

Abstracted Reappraisement Decisions

DECISION NUMBER	JUDGE & DATE OF DECISION	PLAINTIFF	COURT NO.	BASIS OF VALUATION	HELD VALUE	BASIS	PORT OF ENTRY AND MERCHANDISE
R81/377	Rao, J. October 26, 1981	Mitsubishi International Corporation	76-4-00953, etc.	American selling price	Appraised values less 23%, per pair	Agreed statement of facts	Seattle Footwear
R81/378	Rao, J. October 26, 1981	Tanross Supply Co.	R59/10015, etc.	Export value	F.o.b. unit invoice prices plus 20% of difference between f.o.b. unit invoice prices and appraised values	Agreed statement of facts	New York Binoculars

R81/379	Watson, J. October 26, 1981	Geigy Chemical Corp.	R66/16327	United States value	U.S. selling prices, less 1% cash discount as determined by customs officer at time of appraisement; less 33.4% representing profit and general expenses usually made in U.S. on sales of dyestuffs of same class or kind; less costs of transportation and insurance from place of shipment to place of delivery in amounts determined by customs officer at time of appraisement; divided by 1.40 or such other factor applied by customs officer, to allow for customs duties payable on imported dyestuffs	U.S. v. Geigy Chemical Corporation et al. (C.A.D. 1155)	New York Benzenoid dyestuffs

DECISION NUMBER	JUDGE & DATE OF DECISION	PLAINTIFF	COURT NO.	BASIS OF VALUATION	HELD VALUE	BASIS	PORT OF ENTRY AND MERCHANDISE
R81/380	Watson, J. October 26, 1981	Geigy Chemical Corp.	R66/23909	United States value	U.S. selling prices, less 1% cash discount as determined by customs officer at time of appraisement; less 33.4% representing profit and general expenses usually made in U.S. on sales of dyestuffs of same class or kind; less costs of transportation and insurance from place of shipment to place of delivery in amounts determined by customs officer at time of appraisement; divided by 1.40 or such other factor applied by customs officer, to allow for customs duties payable on imported dyestuffs	U.S. v. Geigy Chemical Corporation et al. (C.A.D. 1155)	New York Benzenoid dyestuffs

R81/381	Watson, J. October 26, 1981	Geigy Chemical Corp.	R66/25738	United States value	U.S. selling prices, less 1% cash discount as determined by customs officer at time of appraisement; less 25.7% representing profit and general expenses usually made in U.S. on sales of dyestuffs of same class or kind; less costs of transportation and insurance from place of shipment to place of delivery in amounts determined by customs officer at time of appraisement; divided by 1.40 or such other factor applied by customs officer, to allow for customs duties payable on imported dyestuffs	U.S. v. Geigy Chemical Corporation et al. (C.A.D. 1155)	New York Benzenoid dyestuffs

DECISION NUMBER	JUDGE & DATE OF DECISION	PLAINTIFF	COURT NO.	BASIS OF VALUATION	HELD VALUE	BASIS	PORT OF ENTRY AND MERCHANDISE
R81/382	Watson, J. October 26, 1981	Geigy Chemical Corp.	R69/11440	United States value	U.S. selling prices, less 1% cash discount as determined by customs officer at time of appraisement; less 31.1% representing profit and general expenses usually made in U.S. on sales of dyestuffs of same class or kind; less costs of transportation and insurance from place of shipment to place of delivery in amounts determined by customs officer at time of appraisement; divided by 1.40 or such other factor applied by customs officer, to allow for customs duties payable on imported dyestuffs	U.S. v. Geigy Chemical Corporation et al. (C.A.D. 1155)	New York Benzenoid dyestuffs
R81/383	Rao, J. October 30, 1981	Allied International Inc.	81-4-00360	Cost of production	Invoice unit values, net packed	Summary Judgment	Chicago Hardboard

Appeal to U.S. Court of Customs and Patent Appeals

Appeal 81–29—Nippon Kogaku (USA), Inc. *v.* United States—Instruments—Zoom Photo Slit-Lamp Microscope Main Unit—Summary Judgment—TSUS—Appeal From Decision and Judgment in Slip Op. 81–50.

The merchandise in this case was imported from Japan. Upon entry at the Port of New York in July 1972 and January 1975, it was liquidated and clasified under TSUS Item 709.05 and duty was assessed thereon at 25% ad valorem. The assessment was made under Schedule 7, Part 2, Subpart B, which provides for: "Medical, dental, surgical and veterinary instruments and apparatus (including electro-medical apparatus and ophthalmic instruments), and parts thereof: Optical instruments and appliances, and parts thereof: Mirrors and reflectors, binocular loupes for eye examinations . . . Other."

In contesting the liquidated classification, plaintiff-appellant claims that the imported merchandise is properly classifiable under TSUS Item 708.73 at 22.5% ad valorem. Here Schedule 7, Part 2, Subpart A provides for: "Compound optical microscopes; electron, proton, and similar microscopes and diffraction apparatus; all the foregoing whether or not provided with means for photographing or projecting the image; frames and mountings for the foregoing articles, and parts of such frames and mountings: Compound optical microscopes: Not provided with means for photographing or projecting the image."

Defendant-appellee moved for summary judgment and plaintiff-appellant cross-moved.

Considering the documentary evidence and depositions submitted by the parties, together with admissions by both parties, the United States Court of International Trade granted the motion of defendant-appellee and denied the cross-motion of plaintiff-appellant and dismissed the case.

In its appeal, plaintiff-appellant contends that the United States Court of International Trade erred in denying its cross-motion for summary judgment, in granting defendant-appellee's motion for summary judgment, and in entering judgment dismissing the case. Plaintiff-appellant respectfully requests the United States Court of Customs and Patent Appeals to issue such orders and to grant such relief as to the Court shall seem just.

ERRATUM

Customs Bulletin, Vol. 15, No. 46, dated November 11, 1981, should have the date of November 18, 1981.

International Trade Commission Notices

Investigations by the U.S. International Trade Commission

DEPARTMENT OF THE TREASURY, NOVEMBER 12, 1981.

The appended notices relating to investigations by the U.S. International Trade Commission are published for the information of Customs officers and others concerned.

WILLIAM VON RAAB,
Commissioner of Customs.

In the Matter of CERTAIN MULTI-SEQUENTIAL CODED RADIO PAGERS	Investigation No. 337-TA-109

Order

Pursuant to my authority as Chief Administrative Law Judge of this Commission, I hereby designate Administrative Law Judge Janet D. Saxon as Presiding Officer in this investigation.

The Secretary shall serve a copy of this order upon all parties of record and shall publish it in the Federal Register.

Issued: November 5, 1981.

DONALD K. DUVALL,
Chief Administrative Law Judge.

In the Matter of CERTAIN METHODS FOR EXTRUDING PLASTIC TUBING	Investigation No. 337-TA-110

Notice of Investigation

AGENCY: U.S. International Trade Commission.

ACTION: Institution of investigation pursuant to 19 U.S.C. 1337 and 19 U.S.C. 1337a.

SUMMARY: Notice is hereby given that a complaint was filed with the U.S. International Trade Commission on September 25, 1981, under section 337 of the Tariff Act of 1930 (19 U.S.C. 1337) and 19 U.S.C. 1337a on behalf of Minigrip, Inc., Route 303, Orangeburg, New York 10962. The complaint alleges unfair methods of competition and unfair acts in the importation of certain plastic tubing and reclosable plastic bags into the United States, or in their sale, by reason of the alleged infringement by said tubing and reclosable plastic bags of claims 8, 9, 19 and 20 of U.S. Patent Re 26,991 ("991 patent"), claims 3 and 4 of U.S. Patent Re 28,959 ("959 patent"), and claims 1–5 of U.S. Patent Re 29,208 ("208 patent") and by reason of the alleged contributory and induced infringement of the claims of those patents. The complaint further alleges that the effect or tendency of the unfair methods of competition and unfair acts is to destroy or substantially injure an industry, efficiently and economically operated, in the United States.

The complainant requests that the Commission, after a full investigation, issue both an exclusion order, prohibiting importation of the above-mentioned articles into the United States for the life of the patent in issue, and a cease and desist order.

AUTHORITY: The authority for institution of this investigation is contained in section 337 of the Tariff Act of 1930 and in section 210.12 of the Commission's Rules of Practice and Procedure (19 CFR 210.12).

SCOPE OF THE INVESTIGATION: Having considered the complaint, the U.S. International Trade Commission, on October 29, 1981, ordered that—

(1) Pursuant to subsection (b) of section 337 of the Tariff Act of 1930, an investigation be instituted to determine whether there is a violation of section 337 by reason of unauthorized importation of tubing and reclosable plastic bags which if produced in the United States, would be made, produced, or processed by means of a process covered by claims 8, 9, 19 or 20 of U.S. Patent Re 26,991, claims 3 or 4 of U.S. Patent Re 28,959, or claims 1, 2, 3, 4, or 5 of U.S. Patent Re 29,208, the effect or tendency of which is to destroy or substantially injure an industry, efficiently and economically operated, in the United States;

(2) For the purpose of this investigation so instituted, the following are hereby named as parties upon which this notice of investigation shall be served:

(a) The complainant is—
Minigrip, Inc.
Route 303
Orangeburg, N.Y. 10962

(b) The respondents are the following companies, alleged to be in violation of section 337, and are the parties upon which the complaint is to be served:

Ideal Plastic Industrial Co., Ltd.
81, Lane 59, Ha Mi Street
Taipei, Taiwan

Hong Ter Product Co., Ltd.
No. 12 Lane 122 Street Chiang Nan
Village New HWU, Taipei, Taiwan

Shin Shing Plastic Industrial Co., Ltd.
55 Lane 13 Jin, HSIN, St. Tucheng
Hsing Taipei Hsien, Taiwan

Lien Bin Plastics Co., Ltd.
No. 1 Lane 49, Kuo Ching Road
Pan Chiao City, Taipei
Taiwan

Keron Industrial Co., Ltd.
No. 13, Sec. 1
Jen Ai Road Taipei
Taiwan

Fong Tsu/Ming HSU Industries, Inc.
P.O. Box 396, Kaohsiung
Taiwan

Ta Sen Plastic Industrial Co., Ltd.
315–2 Chang Chun Road
Taipei, Taiwan

Gideons Plastic Industrial Co., Ltd.
No. 22, Lane 59, Ti Eng North Street
Tou Liu, Taiwan

Fortune Well Plastics Co., Ltd.
Rm. 501, 5th Floor
No. 8, Kai-Feng Street Sec. 2
Taipei, Taiwan

Morrison Enterprises Corp.
123 Kung Kuan Road
Taichung, Taiwan, 400

Sue Trading Co.
2 Kansas Street, #M–69
San Francisco, CA 94103

ABC Jewelry Imports
2 Kansas Street, #M–72
San Francisco, CA 94103

Pacific Orient Imports
2 Kansas Street, #M–88
San Francisco, CA 94103

PHC Enterprises
3348 Candlewood Road
Torrance, CA 90505

LOGO Paris, Inc.
2980 Kerner Boulevard
San Rafael, CA 94901

Clearoll Poly Film, Inc.
1051 Irving Avenue
Brooklyn, NY 11385

(c) Harold Brandt, Unfair Import Investigations Division, U.S. International Trade Commission, 701 E Street NW., Washington, D.C. 20436, shall be the Commission investigative attorney, a party to this investigation; and

(3) For the investigation so instituted, Donald K. Duvall, Chief Administrative Law Judge, U.S. International Trade Commission, 701 E Street NW., Washington, D.C. 20436, shall designate the presiding officer.

Responses must be submitted by the named respondents in accordance with section 210.21 of the Commission's Rules of Practice and Procedure (19 CFR 210.21). Pursuant to sections 201.16(d) and 210.21(a) of the rules, such responses will be considered by the Commission if received not later than 20 days after the date of service of the complaint. Extensions of time for submitting a response will not be granted unless good and sufficient cause therefor is shown.

Failure of a respondent to file a timely response to each allegation in the complaint and in this notice may be deemed to constitute a waiver of the right to appear and contest the allegations of the complaint and this notice, and to authorize the presiding officer and the Commission, without further notice to the respondent, to find the facts to be as alleged in the complaint and this notice and to enter both a recommended determination and a final determination containing such findings.

The complaint, except for any confidential information contained therein, is available for inspection during official working hours (8:45 a.m. to 5:15 p.m.) in the Office of the Secretary, U.S. Inter-

national Trade Commission, 701 E Street NW., Washington, D.C. 20436, telephone 202–523–0161.

FOR FURTHER INFORMATION CONTACT: Harold Brandt, Unfair Import Investigations Division, U.S. International Trade Commission, telephone 202–523–8498.

By order of the Commission.

Issued: November 4, 1981.

KENNETH R. MASON,
Secretary.

In the Matter of CERTAIN CARD DATA IMPRINTERS AND COMPONENTS THEREOF	Investigation No. 337–TA–104

Notice of Grant of Application for Interlocutory Review of Orders Nos. 11 and 17 and of Reversal in Part of Order No. 11 and Reversal of Order No. 17

AGENCY: U.S. International Trade Commission.

ACTION: Grant of application for review of Orders Nos. 11 and 17 and reversal in part of Order No. 11 and reversal of Order No. 17.

SUMMARY: Notice is hereby given that the Commission has granted an application by the Commission investigative attorney for interlocutory review of the presiding officer's denial of two motions by the Commission investigative attorney to quash or dismiss requests for admissions and has reversed the presiding officer's denial of those motions.

AUTHORITY: The authority for the Commission's action is contained in section 337 of the Tariff Act of 1930 (19 U.S.C. § 1337) and in section 210.60(b) of the Commission's Rules of Practice and Procedure (19 CFR § 210.60(b)).

SUPPLEMENTARY INFORMATION: Upon receipt of a complaint filed by AM International, Inc., and Bartizan Corporation the Commission instituted investigation No. 337–TA–104 on May 7, 1981, to determine whether there is a violation of section 337 of the Tariff Act of 1930 by reason of unfair methods of competition and unfair acts in the importation and sale of card data imprinters, alleged to infringe claim 7 of U.S. Letters Patent 3,272,120 and claim 12 of U.S. Letters Patent 3,340,800. Notice of the Commission's investigation was published at 46 F.R. 31094 (June 12, 1981).

On July 1, 1981, the Commission investigative attorney filed a motion (Motion No. 104–7) to quash or dismiss requests for admissions directed to the Commission investigative attorney by respondents

National Business Systems, Inc. (Canada), and National Business Systems, Inc. (U.S.). The respondents filed a response in which they requested an order compelling the Commission investigative attorney to answer the requests for admissions. The presiding officer denied the request to compel answers on July 6, 1981, finding that the requests were not properly directed to the Commission investigative attorney (Order No. 8). Upon reconsideration of Order No. 8, however, the presiding officer decided that the Commission investigative attorney is subject to all discovery requests and directed him to submit answers to the requests for admissions (Order No. 11).

On July 13, 1981, the Commission investigative attorney moved to quash respondents' second set of requests for admissions by the Commission investigative attorney (Motion 104–19). This motion was denied by the presiding officer on July 27, 1981, and the Commission investigative attorney was ordered to respond to the second request for admissions. Thereafter, on August 7, 1981, the Commission investigative attorney filed a motion under section 210.60(b) of the Commission's Rules of Practice and Procedure, 19 CFR § 210.60(b), for leave to appeal Orders Nos. 11 and 17 and for stay of the discovery ordered therein (Motion 104–38). This motion was granted by the presiding officer on August 24, 1981 (Order No. 32).

FOR FURTHER INFORMATION CONTACT: Michael Mabile, Esq., Office of the General Counsel, U.S. International Trade Commission; telephone 202–523–1626.

By order of the Commission.

Issued: November 3, 1981.

KENNETH R. MASON,
Secretary.

In the Matter of CERTAIN VACUUM BOTTLES AND COMPONENTS THEREOF	Investigation No. 337–TA–108

Order No. 1

Pursuant to my authority as Chief Administrative Law Judge of this Commission, I hereby designate Administrative Law Judge Donald K. Duvall as Presiding Officer in this investigation.

The Secretary shall serve a copy of this order upon all parties of record and shall publish it in the Federal Register.

Issued: November 2, 1981.

DONALD K. DUVALL,
Chief Administrative Law Judge.

In the Matter of CERTAIN STABILIZED HULL UNITS AND COMPONENTS THEREOF AND SONAR UNITS UTILIZING SAID STABILIZED HULL UNITS	Investigation No. 337–TA–103

Notice of Grant of Leave To Review Order No. 7 and of Affirmance of Order No. 7

AGENCY: U.S. International Trade Commission.

ACTION: Grant of application for review of Order No. 7 and affirmance of Order No. 7.

SUMMARY: Notice is hereby given that on the basis of an application for interlocutory review filed by respondents Furuno U.S.A. and Furuno Electric Co. Ltd. of Japan, the Commission has granted the application for review of and affirmed the presiding officer's denial of a motion by those respondents to suspend the above-captioned investigation.

AUTHORITY: The authority for the Commission's action is contained in section 337 of the Tariff Act of 1930 (19 U.S.C. § 1337) and in section 210.60(b) (19 CFR § 210.60(b)) of the Commission's Rules of Practice and Procedure.

SUPPLEMENTARY INFORMATION: Upon receipt of a complaint filed by Western Marine Electronics Inc. (WESMAR), the Commission voted to institute investigation No. 337–TA–103 on June 1, 1981, in order to determine whether there is a violation of section 337 of the Tariff Act of 1930 by reason of the importation into and sale in the United States of certain stabilized hull units and components thereof and sonar units utilizing said stabilized hull units. Complainant WESMAR alleges that the accused stabilized hull units and components thereof infringe claims 1, 11, 12, and 14 of U.S. Letters Patent 3,553,638 and that the components of the allegedly infringing devices contribute to the infringement of said claims. Notice of the Commission's investigation was published in the *Federal Register* on June 10, 1981 (46 F.R. 30737).

On July 13, 1981, the Furuno respondents moved (Motions 103–2 and 103–3) to stay this investigation pending the outcome of a reexamination proceeding initiated by Furuno U.S.A. at the U.S. Patent and Trademark Office, pursuant to 35 U.S.C. §§ 302–307, of certain claims of the patent at issue. Complainant and the Commission investigative attorney opposed the motions.

On August 13, 1981, the presiding officer denied the motions (Order No. 7) to suspend the proceedings and granted leave to file an application for interlocutory review of her ruling.

FOR FURTHER INFORMATION CONTACT: William E. Perry, Esq., Office of the General Counsel, U.S. International Trade Commission, telephone 202–523–1693.

By order of the Commission.

Issued: October 30, 1981.

KENNETH R. MASON,
Secretary.

Index

U.S. Customs Service

Treasury decisions:	T.D. No.
Carriers bonds	81-280
GSP—Exclusion of certain costs	81-282
Synopses of drawback decisions	81-281

U.S. GOVERNMENT PRINTING OFFICE : 1981 O - 356-511

DEPARTMENT OF THE TREASURY
U.S. CUSTOMS SERVICE
WASHINGTON, D.C. 20229

OFFICIAL BUSINESS
PENALTY FOR PRIVATE USE, $300

POSTAGE AND FEES PAID
DEPARTMENT OF THE TREASURY (CUSTOMS)
(TREAS. 552)

15/48

Customs Bulletin

Regulations, Rulings, Decisions, and Notices concerning Customs and related matters

and Decisions

of the United States Court of Customs and Patent Appeals and the United States Court of International Trade

Vol. 15 DECEMBER 2, 1981 No. 48

NEWARK PUBLIC LIBRARY

DEC 17 1981

U. S. GOVT. PUBS.
DEPOSITORY 376

This issue contains

T.D. 81-283 Through 81-288
C.S.D. 81-231 Through 81-240
Recent Unpublished Customs Service Decisions
Slip Op. 81-100
Protest Abstracts P81/182 Through P81/184
Reap. Abstracts R81/384 Through R81/392
International Trade Commission Notices

THE DEPARTMENT OF THE TREASURY
U.S. Customs Service

T1. 11/3:

NOTICE

The abstracts, rulings, and notices which are issued weekly by the U.S. Customs Service are subject to correction for typographical or other printing errors. Users may notify the U.S. Customs Service, Logistics Management Division, Washington, D.C. 20229, of any such errors in order that corrections may be made before the bound volumes are published.

For sale by the Superintendent of Documents, U.S. Government Printing Office, Washington, D.C. 20402. Price: $2.50 (single copy domestic); $3.15 (single copy foreign). Subscription price: $95.00 a year domestic; $118.75 a year foreign.

U.S. Customs Service

Treasury Decisions

(T.D. 81-283)

Notice of Recordation of Trade Name

"BULGARI"

On September 18, 1981, there was published in the Federal Register (46 FR 4661) a notice of application for the recordation under section 42 of the Act of July 5, 1946, as amended (15 U.S.C. 1124), of the trade name "BULGARI" or printed with a Roman u *i.e.*, "BVLGARI." The notice advised that prior to final action on the application, filed pursuant to section 133.12, Customs Regulations (19 CFR 133.12), consideration would be given to relevant data, views, or arguments submitted in opposition to the recordation and received not later than 30 days from the date of publication of the notice. No responses were received in opposition to the application. The name "BULGARI" or "BVLGARI" is hereby recorded as the trade name of Ditta Sotirio Bulgari di Costantino e Giorgio Bulgari S.A.S., a partnership organized under the laws of Italy, located at 10 Via dei Condotti, Rome, Italy, when applied to fine watches, jewelry, ornamental works and artwork made of precious metal and precious or semi-precious stones and various other items made of precious metals, manufactured in Italy. Bulgari Distribuzione S.P.A. and Bulgari S.P.A. related firms located in Italy, and Anthos S.A. of Switzerland; Abrasale Paris S.A. of France and Abrasale S.A.M. of Monaco licensees, are authorized to use the trade name.

Dated: November 13, 1981.

A. PIAZZA,
Director,
Entry, Procedures and Penalties Division.

[Published in the Federal Register Nov. 18, 1981 (46 FR 56693)]

(T.D. 81-284)

Foreign Currencies—Daily Rates for Countries Not on Quarterly List

The Federal Reserve Bank of New York, pursuant to section 522(c), Tariff Act of 1930, as amended (31 U.S.C. 372(c)), has certified

buying rates for the dates and foreign currencies shown below. The rates of exchange, based on these buying rates, are published for the information and use of Customs officers and others concerned pursuant to Part 159, Subpart C, Customs Regulations (19 CFR 159, Subpart C).

Argentina peso:	
October 5–9, 1981	$0. 000172
Chile peso:	
October 5–9, 1981	$0. 025575
Colombia peso:	
October 5–8, 1981	$0. 017715
October 9, 1981	. 017800
Greece drachma:	
October 5, 1981	$0. 017683
October 6, 1981	. 017841
October 7, 1981	. 017873
October 8, 1981	. 017921
October 9, 1981	. 018182
Indonesia rupiah:	
October 5–9, 1981	$0. 001582
Israel shekel:	
October 5, 6, 1981	$0. 074074
October 7, 8, 1981	. 072569
October 9, 1981	. 073368
Peru sol:	
October 5–8, 1981	$0. 002212
October 9, 1981	. 002203
South Korea won:	
October 5, 1981	$0. 001453
October 6–9, 1981	. 001468

(LIQ-01-03 O:C:E)

Dated October 9, 1981.

KENNETH A. RICH,
Acting Chief,
Customs Information Exchange.

(T.D. 81-285)

Foreign Currencies—Variances From Quarterly Rate

The following rates of exchange are based upon rates certified to the Secretary of the Treasury by the Federal Reserve Bank of New York,

pursuant to Section 522(C), Tariff Act of 1930, as amended (31 U.S.C. 372(c)), and reflect variances of 5 per centum or more from the quarterly rate published in Treasury Decision for the following countries. Therefore, as to entries covering merchandise exported on the dates listed, whenever it is necessary for Customs purposes to convert such currency into currency of the United States, conversion shall be at the following rates.

Austria schilling:	
October 7, 1981	$0.064392
October 9, 1981	.065402
Germany deutsche mark:	
October 8, 1981	$0.453309
October 9, 1981	.456517
Netherlands guilder:	
October 7, 1981	$0.407083
October 8, 1981	.408998
October 9, 1981	.412797
Switzerland franc:	
October 8, 1981	$0.535906
October 9, 1981	.543478

(LIQ-03-01 O:C:E)

Dated: October 9, 1981.

KENNETH A. RICH,
Acting Chief,
Customs Information Exchange.

(T.D. 81-286)

Bonds

Approval and Discontinuance of Carrier's Bonds, Customs Form 3587

Bonds of carriers for the transportation of bonded merchandise have been approved or discontinued as shown below. The symbol "D" indicates that the bond previously outstanding has been discontinued on the month, day, and year represented by the figures which follow. "PB" refers to a previous bond, dated as represented by figures in parentheses immediately following, which has been discontinued. If the previous bond was in the name of a different company or if the surety was different, the information is shown in a footnote at the end of the list.

Dated: November 13, 1981.

Name of principal and surety	Date of bond	Date of approval	Filed with district director/area director/amount
Agricultural Carriers, Inc., 1627 S. Sabin, Wichita, KS; motor carrier; St. Paul Fire & Marine Ins. Co.	Oct. 1, 1981	Oct. 19, 1981	St. Louis, MO $50,000
American Red Ball Transit Co., Inc., 1335 Sadler Circle, E. Drive, P.O. Box 1127, Indianapolis, IN; motor carrier; St. Paul Fire & Marine Ins. Co. (PB 7/1/76) D 10/28/81	Oct. 1, 1981	Oct. 28, 1981	Cleveland, OH $75,000
Louis James Brodie, dba: Brodie Truck Brokerage, P.O. Box 244, San Juan, TX; motor carrier; Fidelity & Deposit Co. of MD	June 1, 1981	Oct. 20, 1981	Laredo, TX $25,000
Caribbean Ships Chandler, Inc., 8000 N.W. 14th St., Miami, FL; motor carrier; Fidelity & Deposit Co. of MD	Aug. 14, 1981	Oct. 19, 1981	Miami, FL $25,000
Coastal Tank Lines, Inc., 250 North Cleveland-Massillon Rd., P.O. Box 5555, Akron, OH; motor carrier; Protective Ins. Co. (PB 1/1/76) D 10/21/81	Sept. 28, 1981	Oct. 21, 1981	Cleveland, OH $100,000
Conway Transportation, Inc., 3312 Eugenia Ave., P.O. Box 15951, Covington, KY; motor carrier; Buckeye Union Ins. Co.	Oct. 13, 1981	Oct. 28, 1981	Cleveland, OH $50,000
Raymond Corcoran Trucking, Inc., 149 Hilltop Road, Billings, MT; motor carrier; The Aetna Casualty & Surety Co.	Oct. 7, 1981	Oct. 22, 1981	Great Falls, MT $25,000
DeCato Bros., Inc., & S & K Trans. Inc., Heater Rd., Lebanon, New Hampshire; motor carrier; Nationwide Mutual Ins. Co. (PB 4/23/75) D 10/28/81	Sept. 25, 1981	Oct. 28, 1981	St. Albans, VT $25,000
Francisco A. Delgado, Inc., Box 7466, Ponce, Puerto Rico; motor carrier; New Hampshire Ins.Co. (PB 7/10/75) D 9/5/80[2]	Aug. 4, 1981	Aug. 28, 1981	San Juan, PR $25,000
W.R. Filbin & Co., Inc., 2436 Bagley St., Detroit, MI; motor carrier; Old Republic Ins. Co. (PB 10/15/80) D 10/15/81[3]	Oct. 15, 1981	Oct. 15, 1981	Detroit, MI $50,000
GO Transport & Delivery Service Inc., 6405 LaPort Rd., Houston, TX; motor carrier; St. Paul Fire & Marine Ins. Co.	Oct 15, 1981	Oct. 29, 1981	Houston, TX $50,000
Golden Strip Transfer, Inc., P.O. Box 458, Simpsonville, SC; motor carrier; United States Fidelity & Guaranty Co. (PB 10/16/79) D 10/21/81[4]	Oct. 16, 1981	Oct. 21, 1981	Charleston, SC $25,000
H.C.L. Transport Co., Inc., 4501 Curtis Ave., Baltimore, MD; motor carrier; St. Paul Fire & Marine Ins. Co.	Oct. 29, 1981	Oct. 30, 1981	Baltimore, MD $25,000
Clay Hyder Trucking Lines, Inc., P.O. Box 1186, Auburndale, FL; motor carrier; Aetna Casualty & Surety Co.	June 23, 1981	Oct. 13, 1981	Tampa, FL $25,000

Name of principal and surety	Date of bond	Date of approval	Filed with district director/area disector/amount
P. Judge & Sons, Inc., Bldg. 1320 Dakar St., Elizabeth, NJ; motor carrier; Washington International Ins. Co.	Oct. 8, 1981	Oct. 23, 1981	Newark, NJ $50,000
Pete Kooyman Trucking, Inc., P.O. Box 1330, Stockton, CA; motor carrier; Ohio Casualty Ins. Co.	Nov. 12, 1980	Oct. 9, 1981	Los Angeles, CA $50,000
Lo Biondo Brothers Motor Express, Inc., Landis Ave., P.O.Box 160, Bridgeton, NJ; motor carrier; Hartford Accident & Indemnity Co. (PB 7/6/78) D 9/2/81 [5]	Sept. 2, 1981	Oct. 6, 1981	Philadelphia, PA $25,000
Loop Fleet Service, Inc., 1776 North CommerceSt., Milwaukee, WI; motor carrier; The Ohio Casualty Ins. Co.	Oct. 22, 1981	Oct. 22, 1981	Milwaukee, WI $25,000
Myers Transfer, Inc., 1241 Haines St., Jacksonville, FL; motor carrier; St. Paul Fire & Marine Ins. Co.	Nov. 29, 1979	Oct. 16, 1981	Tampa, FL $25,000
Penners Transfer Ltd., Steinbach, Manitoba, Canada; motor carrier; Royal Ins. Co. of America (PB 10/22/74) D 10/22/81 [6]	Oct. 1, 1981	Oct. 22, 1981	Pembina, ND $50,000
Red Star Express Lines of Ontario Ltd., 1608 Queensway, Toronto, Ontario, Canada; motor carrier; Liberty Mutual Ins. Co. (PB 12/11/75) D 10/23/81 [7]	Oct. 6, 1981	Oct. 23, 1981	Buffalo, NY $25,000
S & K Trans. Inc.—See DeCato Bros., Inc.			
Tamiami Tile Supply Corp., 7500 N.W. 41st St., Miami, FL; motor carrier; Aetna Ins. Co.	May 4, 1981	July 17, 1981	Miami, FL $50,000
Transport Lemoyne Ltd., 27 St. Louis St., Lemoyne, P.Q., Canada; motor carrier; The Hanover Ins. Co. (PB 6/26/77) D 9/28/81 [8]	Aug. 25, 1981	Sept. 28, 1981	Ogdensburg, NY $50,000
TRICOR Business Group Inc., 22 Olde Mill Run, Medford, NJ; motor carrier; St. Paul Fire & Marine Ins. Co.	Oct. 21, 1981	Oct. 23, 1981	Philadelphia, PA $40,000

[1] Principal is DeCato Bros., Inc.; Surety is St. Paul Fire & Marine Ins. Co.
[2] Surety is Puerto-Rican American Ins. Co.
[3] Surety is St. Paul Fire & Marine Ins. Co.
[4] Surety is Ins. Co. of North America.
[5] Surety is National Grange Mutual Ins. Co.
[6] Surety is Continental Ins. Co.
[7] Surety is Royal Globe Ins. Co.
[8] Principal is Beauvais Ltd.

BON-3-03

GEORGE C. STEUART
(For Marilyn G. Morrison, Director,
Carriers, Drawback and Bonds Division).

(T.D. 81-287)

Foreign Currencies—Variances From Quarterly Rate

The following rates of exchange are based upon rates certified to the Secretary of the Treasury by the Federal Reserve Bank of New York, pursuant to Section 522(C), Tariff Act of 1930, as amended (31 U.S.C. 372(c)), and reflect variances of 5 per centum or more from the quarterly rate published in Treasury Decision for the following countries. Therefore, as to entries covering merchandise exported on the dates listed, whenever it is necessary for Customs purposes to convert such currency into currency of the United States, conversion shall be at the following rates.

(10/12/81, Holiday, Countries Take 10/9/81 Rate)

Austria schilling:	
October 13, 1981	$0. 064641
October 15, 1981	. 064683
Netherlands guilder:	
October 13, 1981	$0. 408163
October 14, 1981	. 407747
Switzerland franc:	
October 13, 1981	$0. 537634
October 14, 1981	. 537057
October 15, 1981	. 534759
October 16, 1981	. 534760

(LIQ-03-01 O:C:E)

Dated: October 16, 1981.

KENNETH A. RICH,
Acting Chief,
Customs Information Exchange.

(T.D. 81-288)

Foreign Currencies—Daily Rates for Countries Not on Quarterly List

The Federal Reserve Bank of New York, pursuant to section 522(c), Tariff Act of 1930, as amended (31 U.S.C. 372(c)), has certified buying rates for the dates and foreign currencies shown below. The rates of exchange, based on these buying rates, are published for the information and use of Customs officers and other concerned pursuant to Part 159, Subpart C, Customs Regulations (19 CFR 159, Subpart C).

(10/12/81, Holiday, Countries Take 10/9/81 Rate)

Argentina peso:	
October 13, 1981	$0. 000172
October 14–16, 1981	. 000167
Chile peso:	
October 13–15, 1981	$0. 025575
October 16, 1981	. 025576
Colombia peso:	
October 13–15, 1981	$0. 017800
October 16, 1981	. 017684
Greece drachma:	
October 13, 1981	$0. 017986
October 14, 1981	. 017825
October 15, 1981	. 017969
October 16, 1981	. 017668
Indonesia rupiah:	
October 13–15, 1981	$0. 001582
October 16, 1981	. 001583
Israel shekel:	
October 13, 1981	$0. 073368
October 14–15, 1981	. 073099
October 16, 1981	. 072834
Peru sol:	
October 13–15, 1981	$0. 002203
October 16, 1981	. 002189
South Korea won:	
October 13–15, 1981	$0. 001468
October 16, 1981	. 001460

(LIQ–01–03 C:C:E)

Dated: October 16, 1981.

KENNETH A. RICH,
Acting Chief,
Customs Information Exchange.

357-929 0 - 81 - 2

Customs Service Decisions

DEPARTMENT OF THE TREASURY,
OFFICE OF THE COMMISSIONER OF CUSTOMS,
Washington, D.C., November 13, 1981.

The following are decisions made by the United States Customs Service where the issues involved are of sufficient interest or importance to warrant publication in the Customs Bulletin.

DONALD W. LEWIS,
Director,
Office of Regulations and Rulings.

(C.S.D. 81-231)

Subject: Marking: Use of Metallic Foil Pressure Sensitive Gummed Labels Meets Country of Origin Requirements. However, Imprinted Lettering Must Be Legible to the Naked Eye

Date: May 28, 1981
File: MAR-2-05 CO:R:E:E
716411 SO

This is in response to your letter of April 16, 1981, concerning the country of origin marking requirements applicable to a brass trivet which was purchased in a retail store in Atlanta, Georgia. The words, "Handmade in Taiwan," appear in very small print on a metallic foil gummed label which is securely fastened to the reverse side of the trivet. The trademark of the manufacturer, (name) also appears in much larger letters on the label. You noted that the article is a copy of the Newport Pineapple Trivet manufactured by your firm. You feel that the label is misleading to the public in that the country of origin is not legible, and the label itself is flimsy and easily removed. You noted that the article has the name (Trademark Name) die sunk on the rear in large size letters along with copyright and trademark notices. You feel that the country of origin marking could also be handled in the same manner.

We have examined the sample you submitted and concur with your opinion that the diminutive letters in the words, "Handmade in Taiwan," are insufficient in size to meet the requirements of 19 U.S.C. 1304, that all articles of foreign origin imported into the United States

must be legibly and conspicuously marked to indicate the English name of the country of origin to an ultimate purchaser in the United States. However, we are of the opinion that pressure sensitive gummed labels constructed of metallic foil, such as the sample label used in this case, would be sufficiently sturdy to adhere to the article until it reaches the ultimate purchaser in the United States, provided the label is large enough to accommodate letters which are legible to the naked eye, for use in marking the country of origin.

A copy of this letter will be circulated to all Customs ports of entry, so that there will be uniform enforcement of the marking of country of origin requirements applicable to cast brass articles, regardless of which port they may enter the United States. In addition, per his request, we are providing Congressman M. Caldwell Butler with a copy of this reply.

(C.S.D. 81-232)

Subject: Value: Applicability of "Super-Deductive" Value, TAA, as a Proper Basis of Appraisement to Certain Merchandise Which is Further Processed in the United States.

Date: June 10, 1981
File: CLA-2 CO:R:CV:V
542476 BS
TAA #28

This is in reference to your letter dated December 17, 1980, and subsequent submissions, in which you request a ruling regarding the proper basis of appraisement to be used in the valuation of 48 light rail cars (street cars) which are to be imported into the United States.

The subject vehicles are being produced by (corporate name and geographic location) for the (Company Name).

The contract between (name) and (name) requires that the final assembly of the vehicles will be performed in the (city name) area and (name) has subcontracted that task to a department of the (corporate name and geographic location). In addition, (name) has executed subcontracts with other American transit equipment suppliers to provide 42 percent of the vehicle components in the United States. The parts of the vehicles that (name) is exporting to the United States, half-body, motor truck, trailer-truck, will thus be assembled and integrated with the U.S.-made components by (name) at its (city name) facility. After various testing procedures required by the (name) contract, the vehicles will be transported by (name) to (name) for final acceptance.

The contract also provides that, for the first four cars, the U.S.-parts will be shipped to Italy, partially assembled with the other compo-

nents, and shipped back to the United States in this partially assembled condition. Final assembly, fittings, testing, etc., will be accomplished by (company name and location) before delivery to (name) for final acceptance. To date, three separate shipments have been made from Italy, one through Philadelphia on October 29, 1980, a second through Baltimore on November 8, 1980, and a third through Baltimore on December 2, 1980.

Pursuant to oral discussions at the Value Branch, Customs Headquarters and at the New York Seaport, we understand that the imported merchandise consists primarily of two major parts of the rail car, Part "A" and Part "B" which make up the front and rear of the vehicle when completed. Part "A" will be imported with a "bogie" (undercarriage containing axle, wheels and motor) and an articulated piece connecting the cars to allow for some vertical and horizontal movement; Part "B" will come in with a bogie and trailer-truck.

Part "A" differs from part "B" in that each has certain items lacking in the other. However, all of the parts will be classifiable under the tariff provision for parts of self-propelled rail vehiches, designed to carry passengers or articles, under item 690.40, Tariff Schedules of the United States (TSUS).

The contract between (name) and the transit authority calls for a unit price per vehicle of (amount). This price includes the cost of assembly performed by (name) in the United States, which is the subject of the subcontract between (name) and (name). The cost of assembly by (name) for each of the 48 cars, as set forth in the submitted contract, is (amount).

The contract between the principals also provides that total deliveries are to be completed within 36 months after completion of the contract documents. In addition, payments to (name) for the cars are to be made on a monthly basis dependent on (name) cost, subject to certain limitations based on the work performed, subject to (name) approval, and to delivery and final acceptance by (name) of the cars.

Based on the circumstances of the transaction as set forth in the contract and your other submissions, it is our opinion that transaction value, section 402(b), Tariff Act of 1930, as amended by the Trade Agreements Act of 1979 (TAA), cannot be used as the basis of appraisement since there is no *price actually paid or payable for the imported merchandise when sold for exportation to the United States.* The price by (name) to (name) is a total price which includes the cost or value of the assembly work performed by (name) in the United States, after importation of the merchandise. Furthermore, since the price of the cars to (name) includes the assembly work done in the United States, it is apparent that title to the imported merchandise does not pass to (name) until after completion of such assembly work performed by

(name) and, it appears, upon final acceptance of each car by (name). Therefore, there is no sale for exportation to the United States of the imported merchandise as required by the statute. You also advise that there are no sales of identical or similar merchandise for exportation to the United States. See section 402(c), TAA.

Since transaction value cannot be found, deductive value, section 402(d), is the next basis of appraisement to be used, unless the importer designates, at entry summary, computed value as the preferred method of appraisement. Basically, deductive value is the resale price in the United States after importation of the goods, with deductions for certain items. Section 402(d)(2)(A)(iii) provides as follows:

> (iii) If the merchandise concerned was not sold in the condition as imported and not sold before the close of the 90th day after the date of importation of the merchandise being appraised, the price is the unit price at which the merchandise being appraised, after further processing, is sold in the greatest aggregate quantity before the 180th day after the date of such importation. This clause shall apply to appraisement of merchandise only if the importer so elects and notifies the Customs officer concerned of that election within such time as shall be prescribed by the Secretary.

The price determined under this paragraph is subject to certain deductions, including the usual commissions for general expenses and profit made in connection with sales in the United States of imported merchandise of the same general class or kind; actual cost of international freight and insurance; usual costs of transportation and insurance in the United States, if not otherwise included; and Customs duties and Federal taxes payable on the merchandise, and certain other Federal excise taxes. In addition, the price is reduced by the value added by processing of the merchandise after importation *to the extent the value is based on sufficient information.* (Emphasis added). See section 402(d)(3)(A)(v).

It is our opinion that "super deductive" value (section 402(d)(2)(A)(iii)) may be used as the proper basis of appraisement (assuming the appropriate election is made), as long as the cost of the processing by (name) in the United States can be determined by "sufficient information," and if the time limitations therein provided are satisfied.

In this regard, the concerned import specialist advises that it was indicated during his various meetings with the manufacturer that the cost of assembly by (name) of (amount) for each car was an average cost and did not properly reflect the actual cost of assembly on each separate assembly operation. We note that an appropriate allocation would have to be made to the various imported parts to reflect a proper appraised value for each part; further, the record discloses that the first four cars are imported at a stage of assembly more advanced than those that will follow.

357-929 O - 81 - 3

Since those discussions, you have submitted a breakdown of (name) cost for each assembly operation, which is as follows:

Component	Amounts	
	Prototypes	Product in cars
Truck assembly	$----------	$----------
Half car body A	----------	----------
Half car body B	----------	----------
Articulation	----------	----------
Clean-up, testing, shipping, etc	----------	----------

The concerned import specialist has questioned whether a further breakdown of the assembly cost may be required in order to properly appraise the imported parts (other than Part "A" and Part "B"). While this may be necessary, it would not prevent the applicability of "super-deductive" value, as long as it is based on sufficient information. Of course, all costs submitted are subject to verification and must be in accordance with generally accepted accounting principles.

We would also note that the failure by (name) the U.S. manufacturer of the brakes supplied to (name) (applicable only to the first four cars) to include the cost of freight and insurance in the sale to (name) is not relevant to our determination. As (name) is not the purchaser of the merchandise, no assist is involved. See sections 402(h)(1)(A) and 402(d)(3)(D), TAA.

Your attention is also invited to section 402(f)(1), TAA, which provides, in effect, that if the various bases of appraisement are found to be inapplicable, then the merchandise shall be appraised on the basis of a value that is derived from the methods set forth under such bases of appraisement, reasonably adjusted to the extent necessary to arrive at a value. We refer to this provision in particular inasmuch as you have advised that the 180-day requirement under section 402(d)(2)(A)(iii) may not be satisfied with respect to the first four prototype cars, and under section 402(f)(1), TAA, one "reasonable adjustment" that may be considered could involve an extension of the 180-day requirement.

(C.S.D. 81-233)

Subject: Tariff Classification: Pharmaceutical Drug Products Classifiable as an Antibiotic, Antidepressant and Diuretic

Date: June 16, 1981
File: CLA-2-04:S:C:D6:63-346
800754

In a letter dated May 20, 1981, you inquired as to the dutiable status of six pharmaceutical drug products manufactured in Italy.

The drugs, their use and classification are as follows:

Product	Use	Tariff No.	Duty rate (percent)
Ampicillin trihydrate	Antibiotic	411.60	11.9
Amoxicillin trihydrate	Antibiotic	411.74	7.4
Imipramine hydrochloride	Antidepressant	412.30	11.1
Chlorothiazide	Diuretic	412.68	12.0
Hydrochlorothiazide	Diuretic	412.68	12.0
Tetracycline	Antibiotic	437.32	4.7

With the exception of tetracycline all of the above products are benzenoid drugs.

This ruling is being issued under the provisions of Section 177.1(a)(1) of the Customs Regulations (19 CFR 177.1).

(C.S.D. 81-234)

Subject: Tariff Classification: Technical Grade Benzenoid Pesticides and Formulated Benzenoid Pesticides Are Classifiable Under Item 408.16, TSUS and 408.38, TSUS, Respectively

Date: June 19, 1981
File: CLA-2-04:S:C:D6-63-223
800529

In a letter dated March 28, 1981, you inquired as to the dutiable status of three benzenoid fungicide products with the trade names Topsin, Topsin E, and Topsin M manufactured in Japan. In addition, you requested a definition of the term "not artificially mixed" as it applies to benzenoid chemical pesticides.

Benzenoid pesticides provided for in Subpart C, Part 1, Schedule 4 of the Tariff Schedules of the United States (TSUS) fall into two categories defined as follows:

Benzenoid pesticides classified under the provisions for Pesticides: Not artificially mixed, items 408.16 through 408.32 TSUS, are concentrated forms of the pesticide chemicals as they are produced, and are not useful as such until properly formulated. They may contain some minor byproducts such as isomers, unreacted raw materials, naturally occurring reaction byproducts, and so forth.

Benzenoid pesticides classified in items 408.36 and 408.38 TSUS are formulated products that have been artificially mixed with carriers, diluents, solvents, surfactants (wetting agents, emulsifiers, etc.) to give proper results upon application. These would include emulsifiable concentrates, granular formulations, wettable powders, dusts, and mulls. Classification under item 408.36 is contingent upon the inclusion

of the active ingredient in the Chemical Appendix to the Tariff Schedules.

Accordingly, Topsin E and Topsin M, which are technical grade benzenoid pesticides, are classifiable under the provision for Fungicides, not artificially mixed in item 408.16 TSUS, and are dutiable at the rate of 0.8 cents per pound plus 12.5 percent ad valorem. Topsin is a formulated benzenoid pesticide classifiable under the provision for Pesticides: Other: Other, in item 408.38 and dutiable at the rate of 0.8 cents per pound plus 9.7 percent ad valorem.

This ruling is being issued under the provisions of Section 177.1(a)(1) of the Customs Regulations (19 C.F.R. 177.1).

(C.S.D. 81-235)

Subject: Drawback: Shearing of Mischmetal Chunks Into Smaller Sized Pieces Then Bagging for Use in Steel Production is a Manufacture of Production for Purposes or Drawback.

Date: June 26, 1981
File: DRA-1-CO:R:CD:D
212981 WR

Issue: Whether the shearing of 1- and 2-pound chunks of mischmetal into 2- or 4-ounce chunks so that they can be used in steel production is a manufacture or production for drawback purposes?

Facts: The mischmetal in issue was formed into very large wafers in Brazil to be used in a steel process called ladle plunging. The process consisted of placing a stack of these wafers in a ladle of molten steel. The mischmetal is highly reactive and it was anticipated that the stacked wafers would melt and be distributed evenly throughout the steel. The anticipated results were not realized. In order to avoid uneven distribution of mischmetal in the product, steel ingots, another process was developed in which a bag of smaller pieces of mischmetal is dropped into the ingot mold rather than into the ladle. Because the Brazilian steel process could not be used, a large quantity of mischmetal wafers was availiable and was bought by an American mischmetal processor. For ease of transportation, the Brazilian supplier broke the large wafers into chunks with nominal weights of 1- and 2-pounds. Because of their size, these 1- and 2-pound chunks could not be used in the Brazilian ladle-plunging process or in the American process of adding a bag of small pieces to the ingot mold.

The American mischmetal processor shears the 1- and 2-pound chunks into smaller pieces having nominal sizes of 2- and 4-ounces. The processor bags the 2- and 4-ounce pieces separately; the 2-ounce pieces in one bag and the 4-ounce pieces in another bag. Both sizes

are bagged into 2-, 4-, and 10-pound bags. Depending on the ingot size, a steel producer specifies a certain piece size of mischmetal. For example, the optimum piece size for an ingot of 5 to 10 tons is the 2-ounce size. The 4-ounce piece size is best used in an ingot of 15 to 30 tons.

Law and analysis: In C.S.D. 79–88, the Customs Service ruled that the shearing of mischmetal into smaller pieces does not constitute a manufacture or production for drawback under section 313(b), Tariff Act of 1930, as amended (19 U.S.C. 1313(b)). In the analysis of the situation then presented it was concluded that a new and different article having a new name, character, or use did not result from the shearing process. However, the evidence on which that conclusion was based was very sketchy. No attempt was made by the drawback claimant in that case to document the end use, if any, of the sheared pieces or whether the pieces were sheared to a specified size.

There have been numerous court cases which seem to reach different conclusions on what is a manufacture or production. In the case of *U.S. v. Samuel Dunkel & Co., Inc.*, 33 C.C.P.A. 60, C.A.D. 317 (1945) a divided court held that the cutting of bulk butter into print butter did not create a new article having a distinctive name, character, or use. The majority held that the exported butter was the same as the imported butter, altered in form, and dedicated to the usual butter uses. In the case of *United States v. International Paint Co.*, 35 C.C.P.A. 87, C.A.D. 376 (1948), a unanimous court distinguished the *Dunkel* case by finding that the process of eliminating mineral acids and metallic salts and adding varnish to a paint substance created a new use for a substance that was known as "paint" before and after the process. The process consisted of pouring out those impurities which naturally separated to the top of the paint, mechanically stirring the remainder to cause a further separation and pouring out those impurities, and then adding varnish to the impurity-free residue to increase viscosity. The critical point for the court in *International Paint* seems to be the recognition that the paint in its imported condition could not be used to protect steel hulls, but that it could be so used after the processing. In the case of *Western Novelty Co. v. U.S.*, 9 Cust. Ct. 429 Abs. 47632 (1942), the court held that cutting a strand of chip roving to a specific length and tying the ends together to make an imitation lei created a new article, notwithstanding the relative simplicity of the process.

The Customs Service in recent years has adopted an expansive view as to what is a manufacture or production. For example, until 1971, the Customs Service ruled that heat-treating of steel was not a manufacture. Thereafter, following a re-evaluation of that position, the Customs Service held that the hardening and tempering of steel

fasteners by heat-treating was a manufacture or production for drawback purposes. See T.D. 72-108(2). In a more recent decision which was published as C.S.D. 79-339, the Customs Service held that cleaning, sorting, bagging, and in some cases, splitting peas that were unfit for human consumption when imported is a production eligible for drawback because the end product was peas that were fit for consumption.

The situation here is analogous to the situation described in C.S.D. 79–339. Although the sheared mischmetal pieces remain unchanged in name from the larger unsheared chunks, the bagged smaller pieces can be used in steel production. The larger unsheared chunks had no such use.

Holding: The shearing of mischmetal chunks which have no use into smaller specifically sized pieces and the bagging of those pieces for use in steel production is a manufacture or production for drawback purposes.

C.S.D. 79–88 is modified accordingly.

(C.S.D. 81–236)

Classification: Toy Figures Of Imaginary Characters Or Creatures, Specifically, Extraterrestrial Creatures Associated With Science Fiction

Date: July 1, 1981
File: CLA-2 CO:R:CV:G
065735 JCH

This decision concerns the tariff classification of toy figures of imaginary characters or creatures, specifically, extraterrestrial creatures associated with science fiction.

Issue: The competing provisions whose application is in question are items 737.40, Tariff Schedules of the United States (TSUS), which encompasses toy figures of animate objects, and item 737.95, TSUS, which encompasses other toys, not specially provided for. Classification under item 737.40 would entitle the ruling applicant to an exemption from duty under the Generalized System of Preferences.

Facts: The merchandise consists of figures from the television "Flash Gordon" and "Battlestar Galactica" offerings. The figures are Thun, the lion man, a tan or orange man with leonine facial features; Vultan, a man in ancient armor with wings; Lizard Woman, a green figure with limbs and torso suggesting a human, but with a tail and head suggesting a lizard; Beastman, a figure with an ape-like head on a human-like body; Lucifer, a purple-robed creature with humanoid facial features; Ovion, a green creature with two legs and four arms

suggesting the features of an insect or reptile; Imperious Leader, a figure with arms and legs covered by a textile toga-like garment, but with a head suggesting reptilian characteristics; and Boray, a figure with a human body, an orange head, pointed ears and other grotesquely distorted humanoid features.

Law and analysis: In counsel's submission of November 21, 1980, emphasis was placed on the ruling applicant's reliance on our ruling in C.S.D. 79–501, file No. 055257, hereinafter referred to as our Star Wars decision, on the ruling applicant's reliance on advice from the national import specialists in entering the merchandise in question under item 737.40, and on the inappropriateness of limiting the scope of the Star Wars decision in our ruling hereinafter referred to as our Micronaut decision, of August 11, 1980, file No. 062708, in view of the special procedures which should be followed when a decision amounting to a change of practice is made. However, it is our understanding from counsel's submission on February 10, 1981, and from views expressed during a second conference on February 20, 1981, that it is no longer claimed that the Micronaut decision and the Star Wars decision are incompatible. The thrust of counsel's claims now is that the merchandise which was the subject of the Micronaut decision contained features such as clip-on armaments, which were incompatible with life and therefore distinguishable from the Star Wars merchandise. At the conference on February 20, 1981, samples were shown to demonstrate this claim. Samples were also presented for the first time to illustrate the claim that, particularly with respect to the Star Wars creature Chewbacca, there was no significant difference between that merchandise and the instant merchandise.

The claim underlying counsel's several presentations is that the requirement that toy figures represent living things or things endowed with life does not require that the articles literally represent real life forms, and that various administrative and judicial precedents illustrate this premise. A review of these decisions shows that we classified as toy figures of animate objects certain Frankenstein monsters in T.D. 56478(190), 100 Treas. Dec. 525 (1965). We also accorded similar tariff treatment to certain Sesame Street figures in our decision of August 2, 1976, file No. 04128. In our Star Wars ruling, we regarded as toy figures of animate objects figures depicting characters or creatures from the motion picture "Star Wars".

Among the court cases counsel relies on is *Dobson* v. *United States*, 28 Cust. Ct. 290, C.D. 1424 (1952), in which the court resorted to lexicographic authorities to determine that toy figures attached to metal toys were images of animate objects. More importantly, counsel relies on *Exhibit Sales, Inc.* v. *United States*, 72 Cust. Ct. 119, C.D. 4512 (1974), in which an egg-shaped fireman with wheels was classified

as a toy figure of an animate object, and on *Sports Specialties* v. *United States*, 65 Cust. Ct. 550, C.D. 4137 (1970), in which a papier mache mascot consisting of a cardinal's head and baseball player's body was classified under item 737.40.

These precedents were cited to show that imaginary or fictional creatures have previously been regarded as animate. It was also emphasized in counsel's presentation, including a meeting at Headquarters on January 16, 1981, that the mascot figure in the *Sports Specialties* case combined bird and human characteristics and, therefore, was analogous to the instant figures which combine reptilian, insect or other subhuman anatomy with human anatomical features.

This matter involves the reconciliation of two opposite classification approaches. There is at one extreme the view that any imaginary figure should be regarded as animate if it is not vegetable, mineral or a machine and is more closely identified with the fauna of earth or an imaginary planet rather than with earthly or alien flora. At the other extreme is a conservative application of what constitutes an animate object as defined in dicta in *Lewis Galoob Co.* v. *United States*, 66 Cust. Ct. 484, C.D. 4239 (1971), and *Louis Marx & Co.* v. *United States*, 66 Cust. Ct. 139, C.D. 4183 (1971). In these decisions the court took the position that animate objects only were those which were endowed with life or which represented living beings. Accordingly, a robot with a human face painted on it and fruit figures with facial features superficially superimposed were not regarded as toy figures of animate objects.

We agree with counsel that the dicta in these decisions should not be applied too literally, and, obviously, we did not do so in our Star Wars decision. However, it was and continues to be our position that there are limitations on the extent purely imaginary creatures may be regarded as animate.

It is now your contention that these limitations are exceeded with the merchandise which was the subject of our Micronaut decision since that creature had features which were incompatible with life, viz. clip-on armaments at its distal extremities, and otherwise had less relationship to human anatomy than the Star Wars creatures and the instant creatures. But regardless of conclusions to be reached from viewing a sample Micronaut, a stricter limitation was articulated in the Micronaut decision. That limitation, as first expressed in the Star Wars decision, was that not all extraterrestrial creatures would be regarded as animate, but only those would be so regarded which were "humanoid" or otherwise depicted the essential characteristics of other recognized earthly creatures.

These former decisions were aiming for a middle ground between the thesis that all exemplars of earthly or imaginery fauna must be

regarded as animate and the thesis that only those faithful to actual known animal species qualify. In applying this approach, there can be little argument that Vultan, Lucifer and Boray are humanoid in the same sense that certain of the Star War figures were humanoid. Accordingly, the ruling applicant is entitled to no less favorable tariff treatment for these articles than was accorded the Star Wars merchandise.

But we find that an opposite conclusion must be reach with respect to Ovion. While it is claimed that Ovion lacks clip-on armaments or other features which excluded the Micronauts from being regarded as animate, it is our view that this creature is on the other side of that middle line between what can be regarded as possessing life and what is purely imaginary. Ovion could only be regarded as classifiable under item 737.40 if we adopted the broad classification thesis that all exemplars of imaginary fauna would be regarded as animate. As indicated from our earlier decisions, it is our view that the *Galoob* and *Marx* decisions are a constraint against this classification approach, and that to adopt the broad classification thesis would do too great a violence with the court's clearly more circumspect classification approach in those cases.

The more difficult issues which remain, and for which our previous decisions do not provide specific guidance, concern the classification of imaginary creatures which combine human anatomy with features from other segments of the animal kingdom as we know it on earth to form imaginary characters of extraterrestrial origin. Unlike the wings of Vultan, which like an angel's wings, are subsidiary to his humanoid form, the subhuman anatomical features of the characters in question, viz. Thun, Lizard Woman, Beastman, and Imperious Leader, are major components of their alien nature.

It would be convenient if we could regard these combinations as novel and, therefore, clearly not encompassed by the pertinent statutory language whose meaning cannot be interpreted without some reference to its meaning at the time it was written. However, fantasies regarding combinations of human and lower animal forms have a long history which stretches from the satyrs of mythology to the creatures in H.G. Wells' "The Island of Dr. Moreau." The instant creatures are merely a continuation of that fantasy. On the other hand, it would also be convenient to accept counsel's suggestion that the *Sports Specialities* decision, *supra*, which dealt with a bird-man mascot, as good authority for excluding toy figures of combination creatures from item 737.95. However, item 737.95 was not in issue as an alternative classification in that case, since the plaintiff was pressing for a classification in Schedule 2, TSUS. In fact, item 737.95 would have carried the same rate of duty as item 737.40. Therefore, any concern by the court, the Government or the plaintiff that item

357-928 O - 81 - 4

737.95 might have been a more appropriate classification would have been entirely moot. Accordingly, we believe that the court's reasoning in the later *Galoob* and *Marx* cases where the issues addressed were closer to the instant issues provides more pertinent guidance.

The further view that the *Exhibit Sales* decision took the edge off of the conservatism of the *Marx* and *Galoob* decisions is also of little help here. The *Exhibit Sales* decision only served the purpose of showing that a caricature-type article would not be excluded from item 737.40. While the egg-shaped fireman and the familiar Sesame Street talking animals are, in a sense, caricature-type articles, the instant combination articles, including Ovion, clearly are not caricatures.

Amid these various considerations, it has been interpreted from our previous decisions and, in effect, advocated by counsel, that whether a creature is animate or not may depend upon the degree of reality imparted to it through the conventions of the theater, video or literature, as the case may be. Specifically, we noted in our Star Wars decision that the Star Wars creatures "think, play, fight, and communicate" like humans. Accordingly, there has been the inference that what is to be regarded as humanoid is to be determined by behavioristic considerations rather than by anatomical differeniations. However, behavioristic considerations were primarily mentioned with respect to creatures like the robed Jawa whose configuration did not suggest the anatomy of lower animal forms, but was left more to the imagination and inferences from behavior. We also made it clear in the Star Wars decision that "[o]nly those [extraterrestrial creatures] which are humanoid in *form*" [emphasis supplied] would be regarded as humanoid.

The configurations of Thun, Lizard Woman, Beastman and Imperious Leader leave little to the imagination, and any assessment regarding their faithfulness to animal or human-like prototypes can be based entirely on visual inspection. This would be the same manner in which, for example, figures of robots would be classified as other than toy figures of animate objects, in which situation any reference to any role played by a theatrical prototype would be entirely irrelevant. With respect to the question as to whether the figures in question are humanoid, we find that it is the specific intention of their inventors by the superimposing of subhuman characteristics on these articles to make them nonhumanoid. We find that a character cannot be both leonine, lizard-like or bestial and be humanoid at the same time.

While it may be argued the intention is only to make them nonhuman, an intention common to all imaginary extraterrestrial creatures, there is, nevertheless, more of an analogy to human life represented

by some of the figures than by others. The predominance of characteristics antithetical to the human life analogy negates the appropriateness of the term "humanoid" in describing the articles. It further negates the appropriateness of referring to the performances of actors or actresses depicting representations of the same creatures to make something in the imagination what it clearly is not in physical form, as opposed to a form ambiguously rendered. In this connection, articles are dutiable in their condition at the time of importation. This fundamental principle relates to an article's actual physical condition, not to any condition projected to it through the process of imagination.

Therefore, if Thun, Lizard Woman, Beastman and Imperious Leader are to be classified under item 737.40, that classification must be predicated on their characteristics which are analogous to subhuman life forms. But their hybrid nature detracts from any such analogies for the same reasons it detracts from their analogy to humanoid forms. In this connection, counsel cites the Star Wars creature Chewbacca as an exception to the foregoing rationale which should rather represent the rule. In our opinion, however, Chewbacca was not a hybrid creature, but more like an undifferentiated exemplar of a subhuman primate and, therefore, closer to actual earth forms than the instant merchandise.

While counsel has asserted the articles in question are marketed as "human-like", the exhibits and samples which have been provided do not establish in any way that there is a commercial designation factor in this matter which is pertinent to classification.

The foregoing analysis renders it unnecessary to discuss counsel's various arguments against classifying any of the articles in question as dolls. With respect to Vultan, we find that while his wings are subsidiary to his otherwise humanoid form, they are of sufficient prominence to preclude classification as a doll. Further we find that any aggregations of the above articles warranting different classifications in single packages would not warrant classification of the contents of those packages as entireties.

Holding: Our previous decisions in C.S.D. 79–501 and of August 11, 1980, are affirmed, except to the extent that they implied that the principles of those decisions were limited to the merchandise of the importers concerned, or are otherwise inconsistent with the views expressed herein.

We find that the figures of Vultan, Lucifer and Boray are classifiable as toy figures of animate objects under item 737.40. We further find that Thun, Lizard Woman, Beastman, Ovion and Imperious Leader are classifiable under the provision for other toys in item 737.95.

(C.S.D. 81-237)

Subject: Instruments of International Traffic: Use of Truck Tractor Units in International Traffic

Date: July 7, 1981
File: BOR 7-04 CO:R:CD:C
105181 JM

This is in reference to your letter of May 21, 1981, which requested information concerning use of tractor trailer units. Your questions are set out below and answered in the order they appear in your letter.

Question 1. Your Canadian manufactured truck tractors with trailers of Canadian or United States manufacture will enter the U.S. at various and random ports of entry in international traffic. Is it possible to use such equipment to move domestic traffic when such movement is incidental to the return of the equipment to Canada?

Section 123.14(a), Customs Regulations, provides that a foreign based vehicle which is engaged in international traffic, such as arriving with merchandise destined to points in the United States, or arriving empty or loaded for the purpose of taking out merchandise, may be admitted without formal entry or the payment of duty. Vehicles so admitted may be used in local traffic in the United States only in accordance with either of the exceptions stated in section 123.14(c), Customs Regulations. A foreign-based vehicle may carry merchandise between points in the United States under section 123.14(c)(1) if the carriage is directly incidental to a regularly scheduled trip in international traffic. Section 123.14(c)(2) permits a foreign-based truck trailer to be used on the return trip to the country from which it entered the United States for such local traffic as is reasonably incidental to its economical and prompt return.

In view of the fact that the tractor trailer units will be arriving at "various and random" ports of entry, these units will not be operating on regularly scheduled trips and can not be used in any local traffic. However, the truck trailers could be used as shown in example A and B in your letter if pulled by a tractor qualified to engage in local traffic, i.e. a United States built tractor or a foreign built tractor which had been properly imported into the United States. Since the domestic traffic contemplated under example C to the above question would be a part of the inward trip, the truck trailers may not be used for this proposed movement.

Question 2. May a unit make proper entry and declaration for entry into the United States and then be used for domestic traffic prior to its return to Canada? If no domestic use in Canada was made prior to the subject units' return to the U.S., is the same declaration still valid?

If a tractor trailer unit is entered under a consumption entry, with payment of duty if applicable, that unit may then be used in domestic traffic in the United States. If the unit is returned to Canada, assuming the unit is based in Canada in the absence of a statement to the contrary in your letter, it will be considered exported in that it has been severed from the mass of things belonging to this country with the intention of uniting it with the mass of things belonging to Canada. In Treasury Decision 78–288, Customs held that an aircraft under British registry which had been imported into the United States for repair was exported when it left the United States to reenter international traffic. Following that decision, your tractor trailer units based in Canada will be subject to Customs entry and payment of duty each time they enter the United States to be used in domestic traffic other than that permitted by section 123.14 Customs Regulations as set out above.

Question 3. You operate a daily service between your terminals at Houston and Calgary using different tractor trailer units. Will this constitute scheduled service?

Customs has held that a carrier may be considered as engaged in regularly scheduled service whether trips are scheduled hourly, daily, or weekly, etc., provided the trips are regular, not varied and are over an established route. If your daily trips are over an established route the tractor trailer units may be used between points in the United States if the carriage of merchandise is incidental to its regularly scheduled trip in international traffic.

You also asked the following questions concerning tractor trailer units which have been properly entered into the United States as imported merchandise. These units will be based at your Houston Terminal and operate out of that location.

Question 1. Will this equipment be eligible to operate within the U.S. hauling domestic traffic?

Insofar as laws are administered by Customs are concerned, there are no restrictions on the use of these units which have been properly entered with payment of any applicable duty.

Question 2. Will such equipment be able to haul to Canada with international freight and return to the U.S. without having hauled domestically in Canada?

Since the equipment is based in the United States, it will not be considered exported when it leaves the United States in international traffic and is not used in other than international traffic while outside the United States. Accordingly, entry as imported merchandise will not be required if this equipment returns to the United States for use in domestic traffic.

Question 3. If the unit did haul domestically in Canada while based in Houston, what are the re-entry requirements?

If a tractor trailer unit based in Houston proceeds to Canada where it is used to haul domestically, the unit will be considered exported. Entry as imported merchandise with payment of any applicable duty must be made upon the units return to the United States prior to use in point-to-point traffic in the United States.

Question 4. What constitutes or qualifies the identity of a base for a unit to operate from?

Customs has no requirements for a base of operations. So long as an operator has the intention to establish his base of operations in a certain place and operates out of that location, Customs will consider that place as his base of operation.

Your last question asked whether a truck (tractor) may be declared as a separate entry, then go back across the line and bring the trailer as a separate entry. Customs has previously held that a tractor may be entered into the U.S. as imported merchandise, return immediately to Canada in international traffic and return to the U.S. with the trailer attached. Upon return to the United States, the tractor would enter as an instrument of international traffic while the trailer would be subject to entry as imported merchandise.

(C.S.D. 81-238)

Subject: Value: Pursuant to Sec. 402(h)(1)(A), TAA, a Metal Stamper Used to Press a Record is Considered a Mold Utilized in the Production of Imported Merchandise Therefore a Dutiable Assist

Date: April 3, 1981
File: 542355 BLS
TAA #21

To: District Director, Seattle, Washington

From: Director, Classification and Value Division, Office of Regulations & Rulings

Subject: Request for Internal Advice No. 214/80; Value of Metal Stamper

The issue in the case is whether a metal "stamper" used to press a record is a tool, die, mold or similar item under The Trade Agreements Act of 1979 (TAA); and if so, what are the elements of cost which comprise the value of the assist?

The importer is involved in the production of 33⅓ r.p.m. stereo records. It contracts with recording artists, hires musicians, the recording studio and the various technicians necessary to produce a digital recording (tape) of the sessions. From the tape is produced a

master lacquer which is then plated to make the metal master from which is made the mother and from which is made the stamper. The stamper is then used, one for each side of the record, to stamp out the vinyl records which are the product which is imported and sold at the retail level.

The whole process described above is, in this case, done in the United States up to and including the production of the stampers. The stampers are exported to the manufacturer in Japan to be sent to the importer in dust covers but without record jackets. The invoiced price of the records represents only the charge for the materials, labor, and profit of the manufacturer.

It is clear from the description and function of the metal stamper that its use is analagous to that of a mold and that without it the records as imported could not be produced. Accordingly, we find that the metal stamper is in the nature of a mold or similar item used in the production of the imported merchandise, and therefore is a dutiable assist.

The second issue is the value of the assist. The importer has advised that the following costs were incurred to produce the metal stamper: (1) Musicians and Arrangements—$8,100; (2) Rehearsal Pay—$1,000; (3) Rehearsal Hall Rent—$450; (4) Agency Fee—$350; (5) Studio Cost—$3,500; (6) Digital Recorder—$4,000; (7) Engineer—$1,000; (8) Cartage—$100; (9) Mastering—$800; (10) Plating—$1,500; and (11) Producer—$8,000. The total cost is $28,800.

Section 152.103(d)(2) of the Customs Regulations provides that the value of an assist in the nature of a tool, die, mold, or similar item, is its cost of production if produced by the buyer (of the merchandise) or a person related to the buyer. Accordingly, the value of an assist in this situation will be the cost of producing the assist as reflected on the books of the producer of the assist, so long as the records have been maintained in accordance with generally accepted accounting principles (GAAP).

In this case, the stamper could not have been brought to its completed condition without the particular music contained thereon. Without the music, the metal stamper would have been a plain stamper which could not be used in that condition in the manufacture of the imported phonograph records. Therefore, as these costs appear to be directly related to the production of the assist, in the absence of a showing to the contrary, we believe that the application of GAAP requires them to be included in the cost of producing the assist.

Under section 402(h)(1)(A), TAA, the term "assist" means certain enumerated items if supplied directly or indirectly, and free of charge or at reduced cost, by the buyer of imported merchandise for use in connection with the production or the sale for export to the United

States of the merchandise. Included among the listed items are "tools, dies, molds, and similar items used in the production of the imported merchandise."

(C.S.D. 81-239)

Subject: Classification: Application and Interpretation of the term "Rubber or Plastics" With Respect to Component Material of Chief Value Determinations

Date: July 10, 1981
File: CLA-2 COR:CV:G
068494 C

Re: Decision on Application for Further Review of Protest No. 1001-0-006262

AREA DIRECTOR OF CUSTOMS,
6 World Trade Center,
New York, New York

DEAR SIR: This protest was filed against your decision in the liquidation on March 28, 1960, of entry No. 79-576527 dated April 9, 1979.

This ruling concerns the interpretation of the term "rubber or plastics" with respect to component material of chief value determinations.

Facts: The footwear in issue consists of joggers made of leather, man-made fabric, rubber and plastics. This footwear was classified in liquidation under the provision for other footwear in item 700.95, Tariff Schedules of the United States (TSUS), and dutiable at the rate of 12.5 percent ad valorem.

The protestant claims that the instant footwear is properly classifiable, depending on gender, under the provision for other footwear of leather for men, youths or boys in item 700.35, TSUS, with duty at the rate of 8.5 percent ad valorem or at the rate of 10 percent ad valorem under item 700.45, TSUS, as other footwear of leather for other persons valued over $2.50 per pair.

The protestant insists that the controverted footwear is in chief value of leather based on a theory that in determining component material of chief value of the footwear the rubber and plastic portions thereof are considered separate components.

This office has previously ruled in HRL 056343 dated May 30, 1978, that the "rubber or plastics" portion of an article is considered as one material for tariff classification purposes.

The protestant also claims that a proportionate share of the cost of

stitching leather overlays onto the fabric uppers should be allocated to the value of the leather component.

Issue: 1. Whether the rubber and plastics portion of the footwear should be considered as one component material in determining component material of chief value.

2. Whether the cost of stitching the leather overlays onto the fabric upper should be allocated among the materials in proportion to their relative quantities.

3. Whether the costs of grinding and buffing the different layers of the bottoms should be allocated among the materials comprising the bottoms.

4. Whether the footwear is classifiable as claimed by the protestant or is classifiable under the provision for other footwear in item 700.95 TSUS.

Law and analysis: Schedule 7, Part 12, Headnote 1(c), TSUS, provides that "for the purposes of the tariff schedules—the term *'rubber or plastics'* means rubber, plastics, or combinations of rubber and plastics."

General Headnote 9(f)(i), TSUS, provides that *"Definitions.* For the purposes of the schedules, unless the context otherwise requires (f) the terms "of," "wholly of," "almost wholly of," "in part of," and "containing," when used between the description of an article and a material (*e.g.*, "furniture of wood," "woven fabrics, *wholly of* cotton," etc.), have the following meanings (i) "of" means that the article is wholly or in chief value of the named material."

General Interpretative Rule 10(f), TSUS, provides that "an article is in chief value of a material if such material exceeds in value each other single component material of the article."

The predecessor provision to General Interpretative Rule 10(f), paragraph 1559(b), Tariff Act of 1930, as amended, provides that "the words "component of chief value" whenever used in this act, shall be held to mean that component material which shall exceed in value any other single component material of the article involved; and the value of each component material shall be determined by the ascertained value of such material in its condition as found in the article."

The relevant excerpts from our previous ruling (HRL 056343) dated May 30, 1978, are as follows:

> Past practice dictates that the "rubber or plastics" portion of an article be considered as one material for tariff classification purposes. This interpretation is supported by the Explanatory Notes to Schedule 7, Part 12 of the Tariff Classification Study (p. 663) which state that the term "rubber or plastics" was adopted to eliminate the often impossible task of distinguishing

between these two materials. "Rubber or Plastics" is therefore a single component.

You also contend that Headnote 1(c) of Schedule 7, Part 12, containing the definition of the term "rubber or plastics" is relevant to the classification of footwear only to determine the material of chief weight because that is the sole context in which "of rubber or plastics" appears in Schedule 7, Part 1A. This is not the most natural or logical construction of the "of rubber or plastics" provision. That provision is to be construed as applying to any article to determine its material(s) in chief value. It is applicable throughout the tariff schedules and is not limited solely to a provision in which the phrase "of rubber or plastics" appears.

The single component material rule set forth in General Interpretative Rule 10(f), TSUS, and its predecessor provision, paragraph 1559(b), Tariff Act of 1930, as amended, *supra*, must be followed unless Congress has expressly prescribed an exception which allows the combining of values of different materials in component material of chief value determinations. See *Steinhardt & Bro.* v. *United States*, 8 Ct. Cust. Appls. 372, T.D. 37629 (1918); *Chin & Co.* v. *United States*, 11 Ct. Cust. Appls. 124, T.D. 38932 (1921); *Swiss Manufacturers Association, Inc., et al* v. *United States*, 39 Cust. Ct. 227, C.D. 1933 (1957) and *Kaplan Products & Textiles, Inc.* v. *United States*, 49 Cust. Ct. 145, C.D. 2376 (1962), aff'd 51 CCPA 2, C.A.D. 828 (1963).

The threshold question to be resolved here is whether Schedule 7, Part 12, Headnote 1(c), TSUS, *supra*, contains such an express exception to the single component material rule which would allow the values of the rubber and plastics in the footwear to be combined for the purposes determining component material of chief value. It is our view that a reading of the legislative history to Schedule 7, Part 12, TSUS, *supra*, compels the conclusion that Headnote 1(c) provides the express exception to the single component rule set forth in General Interpretative Rule 10(f), TSUS. Consequently, the values of the plastic and rubber portions of the footwear in issue may be combined for the purpose of determining component material in chief value.

It is a cardinal principle of Customs law that the component material of chief value must be determined at the time when the components have reached such a condition that nothing remains to be done to them except put them together. *See Berger* v. *Hardy*, 150 U.S. 420, 14 SCR 170, 37 L. ED 1129 (1893); *Turner & Company et al* v. *United States*, 12 Ct. Cust. Appls. 48, T.D. 39997 (1924); *United States* v. *Bernard Judae & Company*, 15 Ct. Cust. Appls. 172, T.D. 42231 (1927); *United States* v. *Jovita Perez et., al.* 44 CCPA

35, 39 C.A.D. 633 (1957); *N. Erlanger Blumgart Co., Inc.* v. *United States*, 57 CCPA 127, C.A.D. 991 (1970).

With respect to the question of allocating the cost of stitching the leather to fabric it is your view that the joining of two pieces of the same material is part of the value of that material while the joining of two different materials assuming that they are already recognizable as component materials is not allocated to either.

In the case of *Jimlar Corp.* v. *United States*, 78 Cust. Ct. 182, CRD 77–2 (1977), relating to a component material of chief value determination of certain footwear uppers the court stated that "It is also settled that the value of each component in an article includes not only the cost of the basic material, but the work put on it to bring it to the point of assembly, and thus in a subassembly of two or more components, the costs of subassembly are to be added to the various components in proportion to their relevant quantities or weights. *Field & Company* v. *United States*, 7 Ct. Cust. Appls. 332, T.D. 36876 (1916). *N. Erlanger Blumgart Co., Inc.* v. *United States*, 57 CCPA 127, C.A.D. 1991 (1970)."

Following this case, it is our view that the stitching and tread costs involved in attaching the leather to fabric are incurred in the subassembly of the uppers prior to the final assembly of the uppers to the soles. Consequently, such costs should be allocated among the materials found in the uppers in proportion of their relative weights.

It is also our position that the cost of grinding and buffing of the different layers of the bottoms should be allocated among the materials comprising the bottoms. Our rationale for this position is that the fusing and grinding of the outsole layers are necessary steps completed prior to the two final assembly processes, *i.e.*, lasting the uppers to the insoles and then cementing the lasted uppers to the bottoms.

Holding: 1. The values of the rubber and plastics portions of the footwear uppers should be combined for component material of chief value determinations.

2. The cost of stitching leather overlays onto the fabric uppers should be allocated among the materials comprising the uppers in proportion to their relative weights.

3. The costs of grinding and buffing the different layers of the bottoms should be allocated among the materials comprising the bottoms.

The protest should be denied with respect protestant's claim that the rubber and plastics material in the uppers should be treated as separate components for component material of chief value determination.

The protest should be allowed with respect to protestant's claim that the cost of stitching leather overlays onto the fabric uppers

should be allocated among the materials comprising the uppers in proportion to their relative weights.

A copy of this decision should be attached to your Form 19 Notice of Action to be sent to the protestant. The protest file is enclosed herewith.

(C.S.D. 81-240)

Subject: Drawback: The Use of a Through Bill of Lading Which is Issued by a Party Other Than the Exporting Carrier Does Not Satisfy Section 22.7(c), Customs Regulations

Date: July 10, 1981
File: DRA-1-CO:R:CD:D
213070 WR

Issue: Whether a contract of carriage to a named point outside the United States can satisfy the clause of section 22.7(c), Customs Regulations (19 CFR 22.7(c))?

Facts: An inquirer claims that it is common at inland ports for goods to be moved under a through bill of lading issued by a person who may not be the exporting carrier. The inquirer states that the through bill of lading will show receipt of the goods at the inland port and will contain the receiving carrier's promise to deliver the goods to a named place outside the United States.

Law and analysis: The statute, 19 U.S.C. 1313, sets an absolute requirement that, for entitlement to drawback, the completed articles must be exported within five years after the date of importation. As such it is clear that the Customs Service can implement the statute only with a procedure that will not thwart or weaken compliance with that requirement.

The present procedure was chosen after a number of alternatives were considered and rejected. See Notice of Proposed Rulemaking published April 23, 1970 (35 F.R. 6505), Supplemental Notice published March 3, 1971 (36 F.R. 4046), and the Final Rule published as T.D. 72-310 (6 Cust. Bull. 639). Obviously, only a person who has knowledge of an event is in a position to certify occurrence of the event. The carrier who conducted the export movement should be able to provide evidence when that movement occurred. A freight forwarder at an inland port who only receives the merchandise may not have knowledge of the date and time the exportation occurred. The records of a person which shows only the date goods were received at the inland port are inadequate to establish the date of exportation. Without more, they are useless for the purpose intended.

The uncertified notice of exportation procedure requires the ex-

istence of records within the jurisdiction of the United States which establish the date of exportation. Any procedure chosen by the Customs Service to implement the statute must be shown to ensure compliance with any requirement specifically set in the statute. A document issued by a carrier who exports the goods (assuming it is legible, satisfactorily identifies the goods and identifies the individual who has actual knowledge of the event) can meet that requirement. A document which does not purport to show when the goods were exported and is prepared before the event occurs does not meet that statutory requirement.

Holding: The Customs Service cannot approve the use of evidence that can not show compliance with the requirements of 19 U.S.C. 1313. An audit of records of a person who received goods at an inland port can not show when the received goods were exported unless that person was the exporting carrier. The use of a through bill of lading which is issued by someone other than the exporting carrier does not satisfy section 22.7(c), Customs Regulations.

Recent Unpublished Customs Service Decisions

The following listing of recent administrative decisions issued by the U.S. Customs Service, and not otherwise published, is published for the information of Customs officers and the importing community. Although the decisions are not of sufficient general interest to warrant publication as Customs Service Decisions, the listing describes the issues involved and is intended to aid Customs officers and concerned members of the public in identifying matters of interest which recently have been considered by the U.S. Customs Service.

A copy of any decision included in this listing, identified by its date and file number, may be obtained in a form appropriate for public distribution upon written request to the Office of Regulations and Rulings, Attention: Legal Retrieval and Dissemination Branch, Room 2404, U.S. Customs Service, 1301 Constitution Avenue, N.W., Washington, D.C. 20229. These copies will be made available at a cost to the requester of $0.10 per page. However, the Customs Service will waive this charge if the total number of pages copied is ten or less.

Decisions listed in earlier issues of the Customs Bulletin, through June 15, 1981, are available in microfiche format at a cost of $34.05 ($0.15 per sheet of fiche). It is anticipated that additions to the microfiche will be made quarterly and subscriptions are available. Requests for the microfiche now available and for subscriptions should be directed to the Legal Retrieval and Dissemination Branch. Subscribers will automatically receive updates as they are issued and will be billed accordingly.

Dated: November 18, 1981.

B. JAMES FRITZ,
Director,
Regulations Control and Disclosure Law Division.

Date of decision	File No.	Issue
10- 8-81	065441	Classification: pocket knives (649.83)
10-27-81	065942	Classification: hunting style boot (700.56)
10- 8-81	066393	Classification: polyethelene tubing (772.65)
10-23-81	066705	Classification: nylon vest (380.84)

Date of decision	File No.	Issue
10-22-81	066855	Classification: epaulets on ladies coat and simulated features on ladies coat held not to be ornamentation
10- 8-81	068156	Classification: action game consisting of plastic domed article with six metal balls and two small plastic rings inside the dome (737.95)
	068180	Classification: men's casual shoes held to be like or similar to a domestic shoe and therefore subject to ASP
10-27-81	068197	Classification: toy figures of animate objects (737.35)
10-27-81	068390	Classification: insoles (389.62)
10-30-81	068512	Classification: scale model of a chemical plant (737.15)
10-16-81	068631	Classification: handicraft set (651.75)
10-16-81	068699	Classification: certain military medals (740.14, 740.38)
10-30-81	068721	Classification: plastic grips for bicycles (732.42)
10-23-81	068739	Classification: women's sweaters (382.58, 382.78)
10-27-81	068800	Classification: roll towel cleaning machine (670.43)
10- 9-81	068877	Classification: winter type gloves designed for use in the sport of golf (734.77)
10-23-81	068924	Classification: toilet bowl brush and brush pot (750.70)
10-27-81	068938	Classification: tote bags and backpack made of rayon material (706.28)
10- 9-81	068961	Classification: key chain attached to a puzzle block (735.20, 740.30, 740.38)
10-15-81	068978	Classification: artificial flowers (748.21)
10-22-81	068985	Classification: footwear imported from South Korea is properly appraised at ASP values
10- 8-81	068989	Classification: tarpaulins with brass grommets (774.55)
10-22-81	069010	Classification: footwear having an upper of fabric coated with polyurethane material (700.56)
10-22-81	069027	Classification: castings used in logging trailers (692.32)
10-29-81	069029	Classification: cellulose acetate sheets (771.20)
10-27-81	069093	Classification: American selling price basis of valuation to certain footwear produced in Taiwan
10- 9-81	069113	Classification: Whether double strips of fabric holding down epaulets on raincoats constitute ornamentation
10-27-81	105217	Vessels: whether the failure of a diesel engine 3000 hours after an overhaul is remissible as a casualty under 19 U.S.C. 1466(d)(1)
10-26-81	105325	Vessels: bare-boat charter of foreign flag vessel to U.S. residents. Possible qualification for cruising license
10-15-81	105335	Vessels: whether sail trainees who pay for training on board a vessel are passengers
10-23-81	105344	International Traffic: the classification of certain metal pallets as instruments of international traffic
10-29-81	105351	Vessels: foreign-flag vessel may load cable at U.S. port and lay the cable between the coastwise points without violating 46 U.S.C. 883

Date of decision	File No.	Issue
9–29–81	105317	Vessels: whether sail trainees who must be on board vessel and who pay for instruction are passengers
10–28–81	105365	Vessels: the dutiability of temporary repairs and/or alterations
10–28–81	105367	Vessels: dutiability of a yacht built in Taiwan and applicability of GSP
	105373	Vessels: whether baggage/articles checked by a ticketed passenger on a foreign vessel is "merchandise" within the meaning of 46 U.S.C. 883
10–23–81	542587	Value: dutiable export value under section 402(b), T.A. of 1930, of jewelry purchased by returning U.S. resident may not properly be determined merely by taking 60 percent of price paid or by dividing domestic value by a certain factor
9– 3–81	801134	Classification: dancing clown music box (654.20)
9– 9–81	801186	Classification: pants with drawstring waist (382.42)
9– 3–81	801218	Classification: polyvinyl chloride record compound (445.48)
9– 8–81	801222	Classification: polyester harness cord (348.05)
9– 1–81	801226	Classification: boys woven synthetic chief value jacket (380.84)
9– 3–81	801271	Classification: boy's nylon jacket (376.56)
9– 8–81	801275	Classification: panty protectors (256.70)
9–10–81	801287	Classification: boys' cotton indigo denim jeans (380.39)
9–10–81	801288	Classification: concentrated beverage base fortified with vitamins (183.05)
9– 8–81	801295	Classification: men's ski jackets (380.84)
9–10–81	801307	Classification: clear laminated woven polypropylene bag (385.53)

United States Court of International Trade

One Federal Plaza
New York, N.Y. 10007

Chief Judge

Edward D. Re

Judges

Paul P. Rao
Morgan Ford
Scovel Richardson
Frederick Landis
James L. Watson
Herbert N. Maletz
Bernard Newman
Nils A. Boe

Senior Judge

Samuel M. Rosenstein

Clerk

Joseph E. Lombardi

Decisions of the United States Court of International Trade

(Slip Op. 81–100)

ST. REGIS PAPER COMPANY, PLAINTIFF *v.* UNITED STATES, DEFENDANT

Court No. 79–5–00925

Before RAO, *Judge.*

On Defendant's Motion To Dismiss and Plaintiff's Opposition Thereto and Cross-Motion To Suspend and Defendant's Opposition Thereto

Freeman, Meade, Wasserman & Schneider (*Louis Schneider* of counsel and *Herbert Peter Larsen* on the brief) for the plaintiff.

J. Paul McGrath, Assistant Attorney General, *Joseph I. Liebman*, Attorney in Charge, International Trade Field Office (*Barbara M. Epstein* on the briefs), for the defendant.

(Dated November 3, 1981)

RAO, *Judge:* This civil action involves three entries of paper imported by plaintiff at New York. The entries, Nos. 493994, 525764 and 529941, were made on July 27, 1977, August 19, 1977 and August 24, 1977, respectively. Timely protests were filed against the classification of the merchandise as papers, not impregnated, other, under item 252.90, Tariff Schedules of the United States, as amended, at 10 percent ad valorem. These protests were denied in due course, but plaintiff did not file a summons in this court within 180 days pursuant to 28 U.S.C. § 2631(a)(1) (1976), in order to preserve its right of action to contest the classification of the merchandise.

By letter of August 25, 1978 plaintiff requested the Customs Service to reliquidate the entries involved herein to correct "a clerical error, mistake or other inadvertence not amounting to an error in the construction of a law" as authorized by section 520(c)(1) of the Tariff Act of 1930, as amended [19 U.S.C. § 1520(c)(1)]. Plaintiff protested Customs' refusal to reliquidate the entries to correct the mistake of fact it alleged had occurred and subsequently filed a timely summons and a timely complaint, the present action.

Defendant filed a motion to dismiss for lack of jurisdiction or, alternatively, for failure to state a claim upon which relief may be granted, and plaintiff subsequently filed its opposition to this motion and a cross-motion to suspend this case under *St. Regis Paper Company* v. *United States*, Court No. 79–4–00673.

The provisions of 19 U.S.C. § 1520(c)(1) in effect at the relevant time required that "a clerical error, mistake of fact, or other inadvertence not amounting to an error in the construction of a law . . . [be] brought to the attention of the customs service within one year after the date of entry, or transaction, or within ninety days after liquidation or exaction when the liquidation or exaction is made more than nine months after the date of the entry, or transaction." [1]

The language of the statute is clear and unambiguous. The error or mistake of fact must have been brought to the attention of the appropriate customs officer within one year after the date of entry or transaction. The latest day on which the alleged error or mistake of fact could have been called to the attention of Customs for any of the entries would have been August 24, 1978, that entry being No. 529941. The alleged errors or mistakes of fact in the other two entries were

[1] Although this provision was amended by Pub. L. 95–410 in 1978 to require the bringing of the error, mistake of fact, or other inadvertence to the attention of the appropriate customs officer within one year after the date of liquidation or exaction, it is of no avail to plaintiff as this provision did not become operative until October 3, 1978.

clearly not brought to the attention of Customs within the required time period. In computing whether an act is made within one year, the day from which the time is reckoned is excluded in making the reckoning. *Hudspith* v. *Pierce-Arrow Motor Car. Co.*, 167 N.Y.S. 418, 419; *State* v. *Jones*, 11 Iowa 11.

Nor is plaintiff able to bring itself within the purview of the statute's provision requiring the mistake of fact to be brought to the attention of Customs within ninety days after liquidation when liquidation occurs more than nine months after the date of entry. For each of the entries involved herein, liquidation took place within one month of the date of entry.[2] The plaintiff did not bring the mistake of fact to the attention of the appropriate customs officer until approximately eleven or twelve months after the dates of liquidation.

For the foregoing reasons, it is ordered and adjudged that defendant's motion to dismiss is granted and plaintiff's cross-motion to suspend is denied.

[2] See the following table:

Entry No.	Date of entry	Date of liquidation
493994	7/27/77	8/26/77
525764	8/19/77	9/16/77
529941	8/24/77	9/16/77

Decisions of the United States Court of International Trade

Abstracts

Abstracted Protest Decisions

DEPARTMENT OF THE TREASURY, *November 9, 1981.*

The following abstracts of decisions of the United States Court of International Trade at New York are published for the information and guidance of officers of the Customs and others concerned. Although the decisions are not of sufficient general interest to print in full, the summary herein given will be of assistance to Customs officials in easily locating cases and tracing important facts.

WILLIAM VON RAAB,
Commissioner of Customs.

DECISION NUMBER	JUDGE & DATE OF DECISION	PLAINTIFF	COURT NO.	ASSESSED	HELD	BASIS	PORT OF ENTRY AND MERCHANDISE
				Par. or Item No. and Rate	Par. or Item No. and Rate		
P81/182	Maletz, J. November 2, 1981	International Seaway Trading Corp.	67/51060, etc.	Item 700.60 20%	Item 700.70 15%, 13%, 12%, 10%, 9% or 7.5%	International Seaway Trading Corp. v. U.S. (C.D. 4773)	Savannah Footwear
P81/183	Re, C.J. November 6, 1981	Kombi Ltd.	77-1-00081, etc.	Item 704.85 32.5%+25¢ per lb.	Item 734.97 or 734.99 9%	Agreed statement of facts	New York Ski glove liners
P81/184	Maletz, J. November 6, 1981	A & S Trading Co.	79-5-00900	Item 737.30 18%	Item 685.22 12.5%	U.S. v. New York Merchandise Co., Inc. (C.A.D. 1004)	New York Poodle radios

Decisions of the United States Court of International Trade

Abstracts

Abstracted Reappraisement Decisions

DECISION NUMBER	JUDGE & DATE OF DECISION	PLAINTIFF	COURT NO.	BASIS OF VALUATION	HELD VALUE	BASIS	PORT OF ENTRY AND MERCHANDISE
R81/384	Re, C.J. November 2, 1981	Marubeni America Corp.	77-2-00240	Export value	Invoiced unit value, less ocean freight and marine insurance, and without additions to said value for currency fluctuation	C.B.S. Imports Corp. v. U.S. (C.D. 4739)	New York Synthetic fabrics
R81/385	Rao, J. November 2, 1981	National Silver Co. et al.	R62/8482, etc.	Export value	F.o.b. unit invoice prices plus 20% of difference between f.o.b. unit invoice prices and appraised values	Agreed statement of facts	New York Table cutlery and stainless steel flatware
R81/386	Rao, J. November 2, 1981	National Silver Co.	R62/8705, etc.	Export value	F.o.b. unit invoice prices plus 20% of difference between f.o.b. unit invoice prices and appraised values	Agreed statement of facts	Los Angeles Table cutlery and stainless steel flatware

R81/387	Rao, J. November 2, 1981	Tanross Supply Co.	285001-A, etc.	Export value	F.o.b. unit invoice prices plus 20% of difference between f.o.b. unit invoice prices and appraised values	Agreed statement of facts	New York Binoculars
R81/388	Richardson, J. November 2, 1981	Concord Electronics Corp.	R66/5334, etc.	Export value	Invoice unit value exclusive of buying commission and bank interest shown on invoices	Concord Electronics Corp. v. U.S. (C.D. 4877)	New York Electronic equipment
R81/389	Rao, J. November 6, 1981	American Thermo-Ware Co.	242758-A	Export value	F.o.b. unit invoice prices plus 20% of difference between f.o.b. unit invoice prices and appraised values	Agreed statement of facts	New York Binoculars
R81/390	Rao, J. November 6, 1981	Kanematsu New York Inc.	R61/18511, etc.	Export value	F.o.b. unit invoice prices plus 20% of difference between f.o.b. unit invoice prices and appraised values	Agreed statement of facts	New York Sewing machine heads
R81/391	Rao, J. November 6, 1981	Mitsui & Co. Ltd.	R62/13525, etc.	Export value	F.o.b. unit invoice prices plus 20% of difference between f.o.b. unit invoice prices and appraised values	Agreed statement of facts	Philadelphia Sewing machine heads
R81/392	Rao, J. November 6, 1981	Henry A. Wess, Inc.	R60/14016, etc.	Export value	Appraised unit values less 7.5%, net packed	Agreed statement of facts	Cincinnati (Cleveland) Prism binoculars

Judgement of the United States Court of International Trade in Appealed Case

November 3, 1981

APPEAL 80-40.—United States *v.* Elbe Products Corp.—IMITATION LEATHER USED FOR SHOE LININGS—NONWOVEN FABRICS OF MANMADE FIBERS—FLEXIBLE STRIPS AND SHEETS OF NON-CELLULOSIC PLASTICS MATERIALS—TSUS.—C.D. 4865 affirmed July 16, 1981 (C.A.D. 1267).

Appeals to United States Court of Customs and Patent Appeals

APPEAL 81-30.—The United States, et al. *v.* Associated Dry Goods Corp.—QUOTA ON WOOL SWEATERS—SHETLAND WOOL FULL-FASHIONED LADIES' SWEATERS—TSUS—Appeal from Decision and Judgment in Slip Op 81-70.

This case arises under an Agreement Relating to Trade in Cotton, Wool and Man-made Fiber Textiles and Textile Products entered into between the United States and the People's Republic of China on September 17, 1980. Although the Agreement specified quantative limits for some categories of textile products, the category in which this merchandise falls (category 445/446) is unlimited.

The merchandise was exported from the People's Republic of China on January 18, 1981 and on January 24, 1981. When it arrived in the United States, it was excluded from entry and stored in a bonded warehouse by the customs officials, pursuant to a quota for the merchandise established by the Committee for Implementation of Textile Agreements. The Committee was created by Executive Order 11651 of March 3, 1972 to supervise and implement all trade agreements. Accordingly, the Committee established an import quota level of 183,706 dozen sweaters.

Plaintiff-appellee alleges and defendant-appellants admit that this quota was filled on February 9, 1981. Imports from the People's

Republic of China of category 445/446 sweaters had been refused entry into the United States since that date. Plaintiff-appellee attempted to enter the merchandise subsequent to February 9, 1981, the date on which the quota was filled.

In Paragraph 8 of the Agreement, the United States reserved the right to request consultations with the People's Republic of China if it believed that imports in any category or categories, not covered by specific limits, due to market disruption, threatened to impede the orderly development of trade between the two countries.

Plaintiff-appellee claims that the merchandise was wrongfully denied entry because the Committee for the Implementation of Textile Agreements miscalculated the quota level at 183,706 dozen sweaters, and also because the Committee erred in concluding that its importations of category 445/446 merchandise from the People's Republic of China were causing market disruption, or threat of disruption.

Defendant-appellants moved to dismiss the case contending that the United States Court of International Trade lacks jurisdiction over this controversy, because it involves foreign policy considerations and the conduct of foreign affairs. Defendant-appellants also contend that plaintiff-appellee has not stated a claim as to which relief may be granted.

The United States Court of International Trade disagrees with both of defendant-appellants' contensions. The Court decided that it has plenary jurisdiction to review the entire matter pursuant to 28 U.S.C. 1581(i) (3) and (4), and ordered that within 90 days from the date of its decision, the Committee for the Implementation of Textile Agreements shall issue a new determination after re-evaluation of the data upon which it based its findings of threat to market disruption; that plaintiff-appellee's merchandise be released by the customs service from the bonded warehouse, with the exception of the merchandise which is the subject of Protest No. 1001-1-003596; and that defendant-appellees' motion is denied.

Defendant-appellants, being dissatisfied with the decision and judgment of the United States Court of International Trade respectfully pray the United States Court of Customs and Patent Appeals pursuant to sections 1541(a) and 2601 (a) and (b), Title 28 U.S. Code, to review the questions involved therein and to grant such relief in the premises as to the Court shall seem just.

APPEAL 81-31.—Texas Instruments, Inc. *v.* The United States —CUE MODULES (ELECTRONIC ASSEMBLIES)—OTHER PARTS OF PHOTOGRAPHIC CAMERAS—SUMMARY JUDGMENT—TSUS— Appeal from Decision and Judgment in Slip Op. 81-67

In this case, the merchandise was imported from Taiwan in May 1977. Upon entry at the Port of Honolulu, the District Director of Customs classified the merchandise under TSUS Item 722.22 as "Other" parts of photographic cameras, as modified by T.D. 68-9, and assessed duty thereon at 10 percentum ad valorem.

Plaintiff-appellant claims that the imported merchandise should have been classified under TSUS Item A722.34 and granted duty-free treatment under the Generalized System of Preferences (GSP) Statute and General Headnote 3(c), TSUS.

Plaintiff-appellant moved for summary judgment. Defendant-appellee responded to plaintiff-appellee's motion and crossmoved for summary judgment.

Upon consideration of all of the facts and the evidence before it, the United States Court of International Trade denied plaintiff-appellant's motion for summary judgment and granted defendant-appellee's motion for summary judgment.

Plaintiff-appellant, being dissatisfied with the decision and judgment of the United States Court of International Trade, appealed to the United States Court of Customs and Patent Appeals and respectfully prays, pursuant to Sections 1541(a) and 2601(a) and (b), Title 28, United States Code, to review the questions involved therein and to grant such relief in the premises as to the Court shall seem just.

International Trade Commission Notices

Investigations by the U.S. International Trade Commission

DEPARTMENT OF THE TREASURY, NOVEMBER 19, 1981

The appended notices relating to investigations by the U.S. International Trade Commission are published for the information of Customs officers and others concerned.

WILLIAM VON RAAB,
Commisioner of Customs.

In the Matter of CERTAIN APPARATUS FOR THE CONTINUOUS PRODUCTION OF COPPER ROD	Investigation No. 337–TA–89

Notice of Termination of Investigation

AGENCY: U.S. International Trade Commission.

ACTION: Termination of Investigation.

SUPPLEMENTARY INFORMATION: On October 19, 1981, complainant Southwire Co., respondents Fried. Krupp G.m.B.H. and Krupp International Inc., and the Commission investigative attorney jointly moved to terminate the above-captioned investigation based upon settlement agreements signed by Southwire and the Krupp respondents (Motion 89–31C). Respondents Phelps Dodge Corp. and Phelps Dodge Industries, Inc., do not oppose terminations.

The settlements which form the basis for the parties motion for termination were approved as being in the public interest by the Commission on July 6, 1981.

On November 13, 1981, the Commission granted Motion 89–31C and terminated investigation No. 337–TA–89.

This investigation was instituted as a result of a complaint filed by Southwire Co. under section 337 of the Tariff Act of 1930 (19 U.S.C. 1337), alleging that the Krupp respondents were in violation of

that statute by reason of infringement of claims of U.S. Letters Patent 4,129,170. A notice of institution was published in the *Federal Register* on August 13, 1980 (45 FR 53923).

Copies of the Commission's Action and Order and all other non-confidential documents in the record of this investigation are available for inspection during official business hours (8:45 a.m. to 5:15 p.m.) in the Office of the Secretary, U.S. International Trade Commission, 701 E Street NW., Washington D.C. 20436, telephone 202-523-0161.

FOR FURTHLR INFORMATION CONTACT: Jeffrey S. Neeley, Esq., Office of the General Counsel, U.S. International Trade Commission, telephone 202–523–0359.

By order of the Commission.

Issued: November 16, 1981.

KENNETH R. MASON,
Secretary.

(19 CFR 207.40)

Notice of Termination of Countervailing Duty Investigation Concerning Die Presses from Italy

AGENCY: United States International Trade Commission.

ACTION: Termination of countervailing duty investigation under section 104(b)(1) of the Trade Agreements Act of 1979, with regard to die presses from Italy.

EFFECTIVE DATE: November 11, 1981.

FOR FURTHER INFORMATION CONTACT: Mr. Daniel Leahy, Office of Investigations, telephone number (202) 523–1369.

SUPPLEMENTARY INFORMATION: The Trade Agreements Act of 1979, subsection 104(b)(1), requires the Commission in the case of a countervailing duty order issued under section 303 of the Tariff Act of 1930, upon the request of a government or group of exporters of merchandise covered by the order, to conduct an investigation to determine whether an industry in the United States would be materially injured, or threatened with material injury, or whether the establishment of such an industry would be materially retarded, if the order were to be revoked. On March 28, 1980, the Commission received a request from the Delegation of the Commission of the European Communities for the review of the outstanding countervailing duty order on die presses from Italy (T.D. 74–165).

On August 24, 1981, the Commission was notified by letter that

Herman Schwabe, Inc., the original petitioner for the countervailing duty order, wished to withdraw its petition on die presses.

While there is no provision in the Trade Agreements Act of 1979, or in its legislative history, permitting termination of a transition case investigation, termination of a properly instituted countervailing duty investigation is permitted under section 704(a) of the Tariff Act of 1930. That section directs the Commission to solicit public comment prior to termination and approve such termination only if it is in the public interest. Termination authority is explicit in cases based on newly filed countervailing duty petitions; it is implied with respect to existing countervailing duty orders.

On September 23, 1981, (46 FR 47032) the Commission published a notice in the *Federal Register* requesting public comment by October 23, 1981 on the proposed termination of the Commission investigation on die presses from Italy. No adverse comments were received in response to the Commission's notice.

The Commission is therefore terminating its investigation under section 104(b)(1) of the Trade Agreements Act of 1979 on die presses from Italy (T.D. 74–165). The termination of this investigation has the same effect as a determination that an industry in the United States would not be materially injured, or threatened with material injury, nor would the establishment of such an industry be materially retarded, if the countervailing duty order were to be revoked.

In addition to publishing this *Federal Register* notice, the Commission is serving a copy of this notice on all persons who have written the agency in connection with this investigation and is also notifying the Department of Commerce of its action in this case.

By order of the Commission.

KENNETH R. MASON,
Secretary.

Issued: November 13, 1981

Index

U.S. Customs Service

	T.D. No.
Treasury decisions:	
Carrier bonds	81-286
Foreign currencies:	
Daily rates; Oct. 5-9, 1981	81-284
Daily rates; Oct. 12-16, 1981	81-288
Variances; Oct. 5-9, 1981	81-285
Variances; Oct. 12-16, 1981	81-287
Notice of recordation of trade name—BULGARI	81-283
Customs Service decisions:	
	C.S.D. No.
Classification:	
Pharmaceutical drug products	81-233
Rubber or plastics	81-239
Technical grade benzenoid pesticides	81-234
Toy figures	81-236
Drawback:	
Shearing of mischmetal chunks	81-235
The use of a through bill of lading	81-240
Instruments of international trade:	
Use of truck units	81-237
Marking: Use of metallic foil pressure	81-231
Value:	
"Super-deductive" value	81-232
A metal stamper (TAA)	81-238

DEPARTMENT OF THE TREASURY
U.S. CUSTOMS SERVICE
WASHINGTON, D.C. 20229

OFFICIAL BUSINESS
PENALTY FOR PRIVATE USE, $300

POSTAGE AND FEES PAID
DEPARTMENT OF THE TREASURY (CUSTOMS)
(TREAS. 552)

U.S. GOVERNMENT PRINTING OFFICE : 1981 O - 357-929

best copy available

15/49

Customs Bulletin

Regulations, Rulings, Decisions, and Notices concerning Customs and related matters

and Decisions

of the United States Court of Customs and Patent Appeals and the United States Court of International Trade

Vol. 15 DECEMBER 9, 1981 No. 49

NEWARK PUBLIC LIBRARY

DEC 29 1981

U. S. GOVT. PUBS.
DEPOSITORY 376

This issue contains

T.D. 81-289 Through 81-292
Proposed Rulemaking
Notice
Appeal Nos. 81-6 and 81-14
Slip Op. 81-101 and 81-102
Erratum
Reap. abstracts R81/393 through R81/406
International Trade Commission Notices

THE DEPARTMENT OF THE TREASURY
U.S. Customs Service

T 1.11/3:

NOTICE

The abstracts, rulings, and notices which are issued weekly by the U.S. Customs Service are subject to correction for typographical or other printing errors. Users may notify the U.S. Customs Service, Logistics Management Division, Washington, D.C. 20229, of any such errors in order that corrections may be made before the bound volumes are published.

For sale by the Superintendent of Documents, U.S. Government Printing Office, Washington, D.C. 20402. Price: $2.50 (single copy domestic); $3.15 (single copy foreign). Subscription price: $95.00 a year domestic; $118.75 a year foreign.

U.S. Customs Service

Treasury Decisions

(T.D. 81-289)

Customhouse Broker License—Cancellation

Cancellation Without Prejudice of Customhouse Broker License 2333

Notice is hereby given that the Commissioner of Customs, on November 2, 1981, pursuant to section 641, Tariff Act of 1930, as amended (19 U.S.C. 1641), and section 111.51(a) Customs Regulations, as amended, upon the specific request of Geraldine Schmitt, Detroit, Michigan (d.b.a. Gerry Schmitt & Co.) cancelled without prejudice individual customhouse broker's license No. 2333 issued to her April 18, 1955, for Customs District No. 38. The Commissioner's decision is effective as of November 2, 1981.

ALFRED R. DE ANGELUS,
Acting Commissioner of Customs.

[Published in the Federal Register Nov. 30, 1981 (46 FR 58242)]

---

19 CFR Part 134

(T.D. 81-290)

Country of Origin Marking

AGENCY: U.S. Customs Service, Department of the Treasury.

ACTION: Final rule.

SUMMARY: This document amends the Customs Regulations, relating to the scope of country of origin marking requirements, by including a cross reference to a section in another part of the Customs Regulations which describes procedures for falsely marked importations.

EFFECTIVE DATE: December 28, 1981.

FOR FURTHER INFORMATION CONTACT: Benjamin Mahoney, Entry Procedures and Penalties Division, U.S. Customs Service, 1301 Constitution Avenue, NW., Washington, D.C. 20229 (202–566–5765).

SUPPLEMENTARY INFORMATION:

BACKGROUND

Section 134.0, Customs Regulations (19 CFR 134.0), outlines the scope of country of origin marking requirements and exceptions of section 304 of the Tariff Act of 1930, as amended (19 U.S.C. 1304), together with certain marking provisions of the Tariff Schedules of the United States (19 U.S.C. 1202). Section 134.0 also indicates that the provisions regarding false or misleading markings as to the country of origin are set forth under Part 134, as well as the consequences and procedures to be followed if imported articles are not legally marked.

Although Part 134 does contain the provisions and procedures governing imported articles not legally marked (19 CFR 134.51), the provisions and procedures concerning false markings are not found in Part 134, section 134.0 notwithstanding. The procedures involving falsely marked articles are set forth in section 11.13, Customs Regulations (19 CFR 11.13), which prohibits importation of articles which bear, or the containers of which bear, false designations of origin or false descriptions or representations. Such falsely designated or falsely described articles are subject to detention by Customs.

To prevent readers from being misled, this document revises section 134.0 to indicate that the provisions relating to falsely marked importations are found in section 11.13.

NOTICE AND PUBLIC PROCEDURE UNNECESSARY

Because this minor amendment is informational in nature and essentially procedural, pursuant to 5 U.S.C. 553(b)(B), notice and public participation thereon are unnecessary.

EXECUTIVE ORDER 12291 AND REGULATORY FLEXIBILITY ACT

It has been determined that the amendment is not a "major rule" within the criteria provided in section 1(b) of E.O. 12291, and therefore no regulatory impact analysis has been prepared.

In addition, it has been determined that the amendment is not subject to the provisions of Pub. L. 96–354, the Regulatory Flexibility Act (5 U.S.C. 601–612), because publication of a notice of proposed rulemaking is not required by the Administrative Procedure Act (5 U.S.C. 551 *et seq.*), or any other law.

DRAFTING INFORMATION

The principal author of this document was Robert J. Pisani, Regulations Control Branch, Office of Regulations and Rulings, U.S. Customs Service. However, personnel from other Customs offices participated in its development.

AMENDMENT TO THE REGULATIONS

Section 134.0 Customs Regulations (19 CFR 134.0), is revised to read as follows:

134.0 Scope.

This part sets forth regulations implementing the country of origin marking requirements and exceptions of section 304 of the Tariff Act of 1930, as amended (19 U.S.C. 1304), together with certain marking provisions of the Tariff Schedules of the United States (19 U.S.C. 1202). The consequences and procedures to be followed when articles are not legally marked are set forth in this part. The consequences and procedures to be followed when articles are falsely marked are set forth in section 11.13 of this chapter. Special marking and labeling requirements are covered elsewhere.

(R.S. 251, as amended, secs. 304, 624, 46 stat. 687, as amended, 759, 77A Stat. 14, 80 Stat. 379, 5 U.S.C. 301, 19 U.S.C. 66, 1202 (General Headnote 11), 1304, 1624))

WILLIAM T. ARCHEY,
Deputy Commissioner of Customs.

Approved: November 9, 1981.

JOHN M. WALKER, JR.,
Assistant Secretary of The Treasury.

[Published in the Federal Register Nov. 30, 1981 (46 FR 58070)]

---

19 CFR Part 141

(T.D. 81-291)

Entry of Merchandise

AGENCY: U.S. Customs Service, Department of the Treasury.

ACTION: Final rule.

SUMMARY: This document amends the Customs Regulations relating to special invoice requirements for certain articles of steel to identify 32 designated articles of steel by American Iron and Steel Institute ("AISI") category numbers.

EFFECTIVE DATE: December, 28, 1981.

FOR FURTHER INFORMATION CONTACT: Irene Barrack, Duty Assessment Division, U.S. Customs Service, 1301 Constitution Avenue, NW., Washington, D.C. 20229 (202 566–8235).

SUPPLEMENTARY INFORMATION:

BACKGROUND

When section 141.89, Customs Regulations (19 CFR 141.89), was amended on February 13, 1978, by T.D. 78–53 (43 FR 6065), to require that a special invoice be presented to Customs for each shipment of certain articles of steel having an aggregate purchase price over $2500, the articles were listed in the document both by the AISI category number and by letter designation. Section 141.89(b)(2) lists the 32 articles of steel only by letter designations (A–FF). It is a common practice in the steel industry, both in the United States and abroad, to identify these articles of steel by AISI category numbers (1–32) and not by letter designations. All printed materials referencing these items identify them by the AISI category numbers.

In order to eliminate a possible source of confusion to readers, Customs is redesignating the articles of steel listed in the present section 141.89(b)(2) by AISI category numbers under a new subparagraph "i."

NOTICE AND PUBLIC PROCEDURE UNNECESSARY

Because this minor amendment is informational in nature and essentially procedural, pursuant to 5 U.S.C. 553(b)(B), notice and public participation thereon are unnecessary.

EXECUTIVE ORDER 12291 AND REGULATORY FLEXIBILITY ACT

It has been determined that the amendment is not a "major rule" within the criteria provided in section 1(b) of E.O. 12291, and therefore no regulatory impact analysis has been prepared.

In addition, it has been determined that the amendment is not subject to the provisions of Pub. L. 96–354, the Regulatory Flexibility Act (5 U.S.C. 601–612), because publication of a notice of proposed rulemaking is not required by the Administrative Procedure Act (5 U.S.C. 551 *et seq.*), or any other law.

DRAFTING INFORMATION

The principal author of this document was Robert J. Pisani, Regulations Control Branch, Office of Regulations and Rulings, U.S. Customs Service. However, personnel from other Customs offices participated in its development.

AMENDMENT TO THE REGULATIONS

Section 141.89(b)(2), Customs Regulations (19 CFR 141.89(b)(2)), is amended by revising it to read as follows:

141.89 Additional information for certain classes of merchandise.

* * * * * * *

(b) * * *

(2) The following articles of steel are subject to the special invoice requirements of section 141.89(b)(1):

(i) Category Number and Products:

(1) Ingots, blooms, billets, slabs, etc.
(2) Wire rods.
(3) Structural shapes, plain 3 inches and over.
(4) Sheet piling.
(5) Plates.
(6) Rail and track accessories.
(7) Wheels and axles.
(8) Concrete reinforcing bars.
(9) Bar shapes under 3 inches.
(10) Bars, hot rolled, carbon.
(11) Bars, hot rolled, alloy.
(12) Bars, cold finished.
(13) Hollow drill steel.
(14) Welded Pipe and tubing.
(15) Other Pipe and tubing.
(16) Round and shaped wire.
(17) Flat wire.
(18) Bale ties.
(19) Galvanized wire fencing.
(20) Wire nails.
(21) Barbed wire.
(22) Black plate.
(23) Tin plate.
(24) Terne plate.
(25) Sheets, hot rolled.
(26) Sheets, cold rolled.
(27) Sheets, coated including galvanized.
(28) Sheets, coated, alloy.
(29) Strip, hot rolled.
(30) Strip, cold rolled.
(31) Strip, hot and cold rolled-alloy.
(32) Sheets other, electric coated.

(R.S. 251, as amended, sec. 407, 42 Stat. 18; secs. 481, 484, 624, 46 Stat. 719, 722, as amended, 759, 77A Stat. 14, Tariff Schedules of the United States (General Headnote 11) (19 U.S.C. 66, 173, 1202, 1481, 1484, 1624)).

WILLIAM T. ARCHEY,
Deputy Commissioner of Customs.

Approved: November 9, 1981.

JOHN M. WALKER, JR.,
Assistant Secretary of the Treasury.

[Published in the Federal Register Nov. 30, 1981 (46 FR 58070)]

(19 CFR PART 10)

(T.D. 81-292)

ARTICLES CONDITIONALLY FREE, SUBJECT TO A REDUCED RATE, ETC.

AMENDMENT TO THE CUSTOMS REGULATIONS REGARDING THE IMPORTATION OF CRUDE PETROLEUM

AGENCY: U.S. Customs Service, Department of the Treasury.

ACTION: Final rule.

SUMMARY: This document amends the Customs Regulations to provide for the duty-free entry of crude petroleum, including reconstituted crude petroleum and crude shale oil, imported from Canada subject to a commercial exchange agreement between U.S. and Canadian refiners. The amendment is being made pursuant to legislation already enacted by the Congress which is intended to assure a continued supply of Canadian crude petroleum at the lowest cost to U.S. refiners located in the northern United States, near the Canadian border.

EFFECTIVE DATE: November 30, 1981.

FOR FURTHER INFORMATION CONTACT: Herbert Geller, Duty Assessment Division, U.S. Customs Service, 1301 Constitution Avenue, NW., Washington, D.C. 20229 (202-566-5307).

SUPPLEMENTARY INFORMATION:

BACKGROUND

At present, petroleum refiners located in the northern United States near the Canadian border rely heavily upon crude petroleum imported from Canada for use in their operations. Due to a lack of pipelines and other factors, Canada is the most economical source of sufficient quantities of crude petroleum for these refiners. The Canadian Government has imposed export quotas on crude petroleum, severely curtailing these exports to the United States. Nevertheless, that Government has continued to supply crude petroleum to refiners in the United States in excess of export quotas in exchange for an equivalent quantity of domestic crude petroleum from the United States.

Because allowing Canadian crude petroleum to be entered without the payment of any Customs duty would remove one economic barrier to such exchanges, and to assure a continued supply of Canadian crude petroleum at the lowest cost to U.S. refiners, by an Act of November 8, 1977 (Pub. L 95-159, Sec. 2, 91 Stat. 1269);

Congress amended the headnotes to Schedule 4, Part 10, Tariff Schedules of the United States (TSUS) (19 U.S.C. 1202). As amended, the TSUS provides that crude petroleum, including reconstituted crude petroleum and Canadian crude shale oil, imported from Canada subject to: (1) a commercial exchange agreement between U.S. and Canadian refiners; and, (2) certain other specified criteria, may be entered free of duty.

Part 10, Customs Regulations, is being amended to ensure that these exchanges will continue.

In accordance with Pub. L. 95–159, this amendment was prepared after consultation with the Secretaries of Commerce and Energy.

INAPPLICABILITY OF NOTICE AND DELAYED EFFECTIVE DATE PROVISIONS

Because the amendment merely conforms the Customs Regulations to changes made to the tariff schedules by Pub. L. 95–159, which already are in effect, pursuant to 5 U.S.C. 553(b)(B), notice and public procedure thereon are found to be unnecessary, and pursuant to 5 U.S.C. 553(d)(3), a delayed effective date is not required.

INAPPLICABILITY OF REGULATORY FLEXIBILITY ACT

Pursuant to the provisions of section 605(b) of the Regulatory Flexibility Act (Pub. L. 96–354, 5 U.S.C. 601, *et seq.*), the Secretary of the Treasury has determined that the amendment set forth in this document will not have a significant economic impact on a substantial number of small entities. Accordingly, the amendment is not subject to the regulatory analysis or other requirements of 5 U.S.C. 603 and 604.

It is presumed that in considering Pub. L. 95–159, the Congress determined that the benefits accruing from the legislation would outweigh any burdens on the affected parties. Because any effects that were contemplated, either expressly or necessarily by the underlying legal authority are considered to flow from that authority and not from the regulation, the regulation is not expected to: have significant secondary or incidental effects on a substantial number of small entities; impose or otherwise cause, a significant increase in the reporting, recordkeeping, or other compliance burdens on a substantial number of small entities; or generate significant interest or attention from small entities through comments, either formal or informal.

EXECUTIVE ORDER 12291

Because this will not result in a "major" rule as defined by section

357-930 O - 81 - 2

1(b) of Executive Order 12291, the regulatory analysis and review prescribed by section 3 of the Executive Order is not required.

DRAFTING INFORMATION

The principal author of this document was Lawrence P. Dunham, Regulation Control Branch, Office of Regulations and Rulings, U.S. Customs Service. However, personnel from other Customs offices and the Departments of Commerce and Energy participated in its development.

AMENDMENT TO THE REGULATIONS

Part 10, Customs Regulations (19 CFR Part 10), is amended by adding a new section 10.179 to read as follows:

PART 10—ARTICLES CONDITIONALLY FREE, SUBJECT TO A REDUCED RATE, ETC.

CANADIAN CRUDE PETROLEUM

10.179 Canadian crude petroleum subject to a commercial exchange agreement between United States and Canadian refiners.

(a) Crude petroleum (as defined in Schedule 4, Part 10, Headnote 4(a), Tariff Schedules of the United States (19 U.S.C. 1202)) produced in Canada may be admitted free of duty if the entry is accompanied by a certificate from the importer establishing that:

(1) The petroleum is imported pursuant to a commercial exchange agreement between United States and Canadian refiners which has been approved by the Secretary of Energy;

(2) The petroleum is imported pursuant to an import license issued by the Secretary of Energy;

(3) An equivalent amount of domestic or duty-paid foreign crude petroleum on which the importer has executed a written waiver of drawback, has been exported to Canada pursuant to the export license and previously has not been used to effect the duty-free entry of like Canadian products; and,

(4) An export license has been issued by the Secretary of Commerce for the petroleum which has been exported to Canada.

(b) The provisions of this section may be applied to:

(1) Liquidated or reliquidated entries if the required certification is filed with the district director at the port where the original entry was made on or before the 180th day after the date of entry; and

(2) Articles entered, or withdrawn from warehouse, for consumption, pursuant to a commercial exchange agreement.

(c) Verification of the quantities of crude petroleum exported to or imported from Canada under such a commercial exchange agreement shall be made in accordance with import verifica-

tion provided in Part 151, Subpart C, Customs Regulations (19 CFR Part 151, Subpart C).

(R.S. 251, as amended; sec. 624, 46 Stat. 759, 77A Stat. 14, Sec. 2, 91 Stat. 1269 (5 U.S.C. 301, 19 U.S.C. 66, 1202 (General Headnote 11) 1624)).

WILLIAM T. ARCHEY,
Acting Commissioner of Customs.

Approved: October 26, 1981.

JOHN M. WALKER, JR.,
Assistant Secretary of the Treasury.

[Published in the Federal Register Nov. 30, 1981 (46 FR 58069)]

U.S. Customs Service

Proposed Rulemaking

(19 CFR Part 101)

Proposed Change in the Field Organization of the Customs Service

AGENCY: U.S. Customs Service, Department of the Treasury.

ACTION: Proposed rule.

SUMMARY: This notice proposes to amend the Customs Regulations to change the field organization of the Customs Service by extending and redefining the geographical boundaries of the Puget Sound Washington, Customs port of entry. The proposed geographical limits of the consolidated port of entry would encompass all of the area within the present port of entry limits of Seattle, Anacortes, Bellingham, Everett, Friday Harbor, Neah Bay, Olympia, Port Angeles, Port Townsend, and Tacoma, Washington. The proposed change is part of Customs continuing program to obtain more efficient use of its personnel, facilities, and resources, and to provide better service to carriers, importers, and the public.

DATES: Comments must be received on or before (60 days from date of publication in the Federal Register).

ADDRESS: Written comments (preferably in triplicate) should be addressed to the Commissioner of Customs, Attention: Regulations Control Branch, U.S. Customs Service, 1301 Constitution Avenue, NW., Room 2426, Washington D.C. 20229.

FOR FURTHER INFORMATION CONTACT: Joseph O'Gorman, Office of Inspection, U.S. Customs Service, 1301 Constitution Avenue, NW., Washington D.C. 20229 (202 566-8157).

SUPPLEMENTARY INFORMATION:

BACKGROUND

The limits of the consolidated Customs port of entry of Puget Sound were extended in 1979 by T.D. 79-169 (44 FR 34478). How-

ever, since that time, there have been numerous requests for Customs services by businesses which have established outside of the current port limits. To keep pace with the expanding needs of Customs-related activities in the Puget Sound port of entry and to provide better service to importers, carriers, and the public, Customs proposes to further extend the port limits. Under the proposal, the geographical boundaries of the port would be extended to include the limits of the Port of Seattle, which includes the Seattle corporate limits, plus an extension by section, township, and range.

The proposed amendment would eliminate specific reference to the Ports of "Kenmore Air Harbor" (District 30, Port 18 in Annex A to the Tariff Schedules of the United States (TSUS)), and "Renton Municipal Airport and Seaplane Base" as set forth in T.D. 79–169.

The geographical limits of the proposed consolidated port of entry would encompass all of the area within the present port of entry limits of Seattle, Anacortes, Bellingham, Everett, Friday Harbor, Neah Bay, Olympia, Port Angeles, Port Townsend, and Tacoma, Washington.

As extended, the geographical boundaries of Puget Sound, Washington, port of entry would be redefined as follows:

> The ports of Seattle (section 35, Township 27 North, Range 3 East, West Meridian; sections 1, 2, 11 through 14, inclusive, 24, 25, 26, 34, 35, and 36, Township 26 North, Range 3 East, West Meridian; Township 26 North, Range 4 East, West Meridian; Township 26 North, Range 5 East, West Meridian; sections 1, 2, 3, 9 through 16, inclusive, 21 through 27, inclusive, and 36, Township 25 North, Range 3 East, West Meridian; Township 25 North, Range 4 East, West Meridian; Township 25 North, Range 5 East, West Meridian; sections 2, 9 through 16, inclusive, 22 through 27, inclusive, 34, 35, and 36, Township 24 North, Range 3 East, West Meridian; Township 24 North, Range 4 East, West Meridian; Township 24 North, Range 5 East, West Meridian; sections 1, 2, 11, 12, 13, 24, 25, 26, and 36, Township 23 North, Range 3 East, West Meridian; Township 23 North, Range 4 East, West Meridian; Township 23 North, Range 5 East, West Meridian; sections 1 through 17, inclusive, Township 22 North, Range 4 East, West Meridian; and sections 1 through 18, inclusive, Township 22 North, Range 5 East, West Meridian), Anacortes, Bellingham, Everett, Friday Harbor, Neah Bay, Olympia, Port Angeles, Port Townsend; and the territory in Tacoma beginning at the intersection of the westernmost city limits of Tacoma and The Narrows and proceeding in an easterly, then southerly, then easterly direction along the city limits of Tacoma to its intersection with Pacific Highway (U.S. Route 99), then proceeding in a southerly direction along Pacific Highway to its intersection with Union Avenue Extended and continuing in a southerly direction along Union Avenue

Extended to its intersection with the northwest corner of McChord Air Force Base, then proceeding along the northern, then western, then southern boundary of McChord Air Force Base to its intersection, just west of Lake Mondress, with the northern boundary of the Fort Lewis Military Reservation, then proceeding in an easterly direction along the northern boundary of the Fort Lewis Military Reservation to its intersection with Pacific Avenue, then proceeding in a southerly direction along Pacific Avenue to its intersection with National Park Highway, then proceeding in a southeasterly direction along National Park Highway to its intersection with 224th Street, East, then proceeding in an easterly direction along 224th Street, East, to its intersection with Meridian Street, South, then proceeding in a northerly direction along Meridian Street to the northern boundary of Pierce County, then proceeding in a westerly direction along the northern boundary of Pierce County to its intersection with Puget Sound, then proceeding in a generally southwesterly direction along the banks of the East Passage of Puget Sound, Commencement Bay, and The Narrows to the point of intersection with the westernmost city limits of Tacoma, including all points and places on the southern boundary of the Juan de Fuca Strait from the eastern port limits of Neah Bay to the western port limits of Port Townsend, all points and places on the western boundary of Puget Sound, including Hood Canal, from the port limits of Port Townsend to the northern port limits of Olympia, all points and places on the southern boundary of Puget Sound from the port limits of Olympia to the western port limits of Tacoma, and all points and places on the eastern boundary of Puget Sound and contiguous waters from the port limits of Tacoma north to the southern port limits of Bellingham, all in the State of Washington.

AMENDMENTS TO THE REGULATIONS

If the proposed change is adopted, the list of Customs regions, districts, and ports of entry in section 101.3(b), Customs Regulations (19 CFR 101.3(b)), would be amended accordingly.

COMMENTS

Before adopting this proposal, consideration will be given to any written comments timely submitted to the Commissioner of Customs. Comments submitted will be available for public inspection in accordance with section 103.8(b), Customs Regulations (19 CFR 103.8(b)), on regular business days between the hours of 9:00 a.m. to 4:30 p.m. at the Regulations Control Branch, Room 2426, Headquarters, U.S. Customs Service, 1301 Constitution Avenue, NW., Washington, D.C. 20229.

EXECUTIVE ORDER 12291

This proposed amendment does not meet the criteria for a "major" regulation as defined by section 1(b) of E.O. 12291. Accordingly, the regulatory impact analysis prescribed by section 3 of the E.O. is not required.

REGULATORY FLEXIBILITY ACT

Pursuant to the provisions of section 3 of the Regulatory Flexibility Act (Pub. L. 96–354, 5 U.S.C. 601, *et seq.*), the Secretary of the Treasury has determined that, if promulgated, the regulation set forth in this document will not have a significant economic impact on a substantial number of small entities. Accordingly, this regulation is not subject to the regulatory analysis or other requirements of 5 U.S.C. 603 and 604.

Customs routinely establishes, expands, and consolidates Customs ports of entry throughout the United States to accommodate the volume of Customs-related activity in various parts of the country. Although this proposal may have a limited effect upon some small entities in the Puget Sound area, it is not expected to be significant because the extension of the limits of Customs ports of entry in other locations has not had a significant economic impact upon a substantial number of small entities to the extent contemplated by the Regulatory Flexibility Act.

AUTHORITY

This change is proposed under the authority vested in the President by section 1 of the Act of August 1, 1914, 38 Stat. 623, as amended (19 U.S.C. 2), and delegated to the Secretary of the Treasury by Executive Order No. 10289, September 17, 1951 (3 CFR 1949–1953 Comp., Ch. II), and pursuant to authority provided by Treasury Department Order No. 101–5 (46 FR 9336).

DRAFTING INFORMATION

The principal author of this document was Barbara E. Whiting, Regulations Control Branch, Office of Regulations and Rulings, U.S. Customs Service. However, personnel from other Customs offices participated in its development.

Dated: October 26, 1981.

JOHN M. WALKER, JR.,
Assistant Secretary of the Treasury.

[Published in the Federal Register Nov. 30, 1981 (46 FR 58093)]

19 CFR Part 19

Proposed Customs Regulations Amendments Relating To Use of Container Stations After Transportation In-Bond

AGENCY: U.S. Customs Service, Department of the Treasury.

ACTION: Proposed rule.

SUMMARY: This document proposes to amend various sections of the Customs Regulations relating to container stations, to provide that bonded carriers may transport containerized cargo in-bond to container stations at ports of destination. Presently, the regulations may be interpreted so as to restrict the use of container stations for imported merchandise brought into a port by an importing carrier only to facilities within the port of arrival after complying with appropriate procedures. Although a bonded carrier may transport containerized cargo to its own facility at a port of destination, this interpretation precludes the delivery of the in-bond merchandise to a container station at the port of destination.

DATE: Comments must be received on or before (60 days from the date of publication in the Federal Register).

ADDRESS: Written comments (preferably in triplicate) may be addressed to the Commissioner of Customs, Attention: Regulations Control Branch, U.S. Customs Service, 1301 Constitution Avenue, NW., Room 2426, Washington, D.C. 20229.

FOR FURTHER INFORMATION CONTACT: Entry aspects: Benjamin H. Mahoney, Entry Procedures and Penalties Division (202–566–5765); Bond aspects: William D. Lawlor, Carriers, Drawback and Bonds Division (202–566–5856); Operations aspects: Thomas J. Hargrove, Cargo Processing Division (202–566–5354); U.S. Customs Service, 1301 Constitution Avenue, NW., Washington; D.C. 20229.

SUPPLEMENTARY INFORMATION:

BACKGROUND

A container station is a secured area within the United States into which containers of merchandise may be moved for the purpose of opening the containers and delivering the contents before any entry is filed with Customs or duty is paid. A container station is important because it serves as a central location at a port for processing containerized merchandise which otherwise could not be handled timely at the dock, wharf, pier, or bonded carrier's terminal.

Sections 19.40 through 19.49, Customs Regulations (19 CFR

19.40–19.49), provide the procedures for the establishment and use of container stations. The pertinent regulations presently provide that a container station, independent of the importing carrier, may be established at any port or portion of a port, or any other area under the jurisdiction of a district director, upon the filing of an application and posting of a bond by a prospective container station operator, and approval of the application by the district director of Customs. Containerized cargo may be moved from the place of unlading to a designated container station before the filing of an entry for the merchandise. The container station operator may file an application for the transfer of a container intact to the station. Approval of the application by the district director shall serve as a permit to transfer the container and its contents to the station. The importing carrier remains jointly and severally liable with the container station operator for the proper delivery of the merchandise until it is "permitted" in accordance with subpart A of Part 158, Customs Regulations (19 CFR Part 158). The regulations also provide that except when the container station operator is moving the merchandise to his own station by his own vehicle, the merchandise may be transferred to a container station only by a bonded cartman (see 19 CFR 112.1 (b)); or bonded carrier.

A problem has arisen because Part 19 may be interpreted so as to restrict the use of container stations for imported merchandise brought into a port by an importing carrier only to facilities within the port of arrival after complying with appropriate procedures. Although a bonded carrier may transport containerized cargo to its own facility at a port of destination, this interpretation precludes the placement of the in-bond merchandise in a container station at the port of destination.

Customs realizes that the same conditions which existed at a port of arrival before the establishment and use of container stations there also exist when containerized cargo is transported in-bond to a port of destination from the port of arrival in the United States. The bonded carrier's terminal at the port of destination may be unable to process containerized cargo timely and may be unable to provide adequate facilities to permit Customs examination of the imported merchandise, thereby causing a great inconvenience and expense in storage charges to the importer. Alternatives to processing containerized cargo at the carrier's terminal include moving the entire container to a general order warehouse (see 19 CFR 127.1), public stores, or the importer's premises for examination.

Therefore, the same rationale for the use of a container station for containerized cargo arriving directly at a port of arrival applies to the delivery of containerized cargo transported in-bond to a container

357-930 0 - 81 - 3

station at a port of destination. The container station would serve as a centralized location for processing in-bond merchandise at the port of destination. Bonded carriers would by permitted to transport merchandise directly to these stations rather than holding the containers at their own facilities.

In addition to benefiting the importing community, Customs would benefit from the proposed regulatory change. The workload would be concentrated at centralized facilities which are already staffed by Customs officers. Furthermore, container stations, unlike common carrier terminals, are required to meet Customs physical cargo security standards.

Accordingly, this document proposes to amend sections 19.40, 19.41, 19.43, and 19.44, Customs Regulations (19 CFR 19.40, 19.41, 19.43, 19.44), to permit containerized cargo transported in-bond to be delivered to a container station at a port of destination.

PROPOSED CHANGES

1. It is proposed to amend section 19.40 to provide that a container station, independent of either a bonded carrier or importing carrier, may be established at any port or portion of a port, or any other area under the jurisdiction of a district director upon complying with the necessary requirements. It is also proposed to amend the format of the Containerized Cargo Bond (Term) set forth in section 19.40 to permit a container station operator to receive containerized cargo at specified locations from a bonded carrier after transportation in-bond.

2. It is proposed to amend section 19.41 to provide that containerized cargo also may be received directly at the container station from a bonded carrier after transportation in-bond before the filing of an entry of merchandise therefor or the permitting thereof, as provided in subpart A of Part 158. The phrase "filing of an entry" in present section 19.41 means the filing of one of the types of entry of merchandise such as consumption, warehouse, or temporary importation under bond entry. This phrase is not intended to mean transportation entries. Therefore, to avoid any confusion, it is proposed to add the phrase "of merchandise" after the word "entry" in section 19.41.

3. It is proposed to amend section 19.43 to provide that, in addition to the locations presently specified, an application (i.e., permit to transfer) also may be filed at the bonded carrier's facility for merchandise transported in-bond.

4. It is proposed to amend section 19.44 to clarify the responsibilities of the importing carrier and container station operator, and provide for the new responsibilities of the bonded carriers.

CONTAINERIZED CARGO BONDS (TERM)

It is anticipated that the final rule would become effective 60 days after the date of its publication in the Federal Register. Containerized Cargo Bonds (Term) already on file with Customs need not be terminated by the effective date of the final rule unless the principal desires to take advantage of the Customs Regulations, as amended. In that event, a new Containerized Cargo Bond (Term) in the amended format would be executed and submitted to the district director for approval before the effective date of the final rule. The existing bond would be terminated.

Containerized Cargo Bonds (Term) which are executed and submitted after the effective date of the final rule would be in the amended format.

AUTHORITY

These amendments are proposed under the authority of R.S. 251, as amended (19 U.S.C. 66), sec. 448, 46 Stat. 714, as amended (19 U.S.C. 1448), sec. 450, 46 Stat. 715, as amended (19 U.S.C. 1450), sec. 484, 46 Stat. 722, as amended (19 U.S.C. 1484), sec. 499, 46 Stat. 728, as amended (19 U.S.C. 1499), sec. 551, 46 Stat. 742, as amended (19 U.S.C. 1551), sec. 552, 46 Stat. 742 (19 U.S.C. 1552), sec. 565, 46 Stat. 747, as amended (19 U.S.C. 1565), sec. 623, 46 Stat. 759, as amended (19 U.S.C. 1623), sec. 624, 46 Stat. 759 (19 U.S.C. 1624).

COMMENTS

Before adopting this proposal, consideration will be given to any written comments timely submitted to the Commissioner of Customs. Comments submitted will be available for public inspection in accordance with section 103.8(b), Customs Regulations (19 CFR 103.8(b)), during regular business days between the hours of 9:00 a.m. and 4:30 p.m. at the Regulations Control Branch, Room 2426, U.S. Customs Service Headquarters, 1301 Constitution Avenue, NW., Washington, D.C. 20229.

E.O. 12291

The proposed amendments do not meet the criteria for a "major rule" as specified in section 1(b) of E.O. 12291. Accordingly, no regulatory impact analysis has been prepared for this regulatory project.

REGULATORY FLEXIBILITY ACT

Pursuant to the provisions of section 605(b) of the Regulatory Flexibility Act (Pub. L. 96-354, 5 U.S.C. 601, *et seq.*), the Secretary

of the Treasury has determined that the regulations set forth in this document will not have a significant economic impact on a substantial number of small entities. Accordingly, these regulations are not subject to the regulatory analysis or other requirements of 5 U.S.C. 603and 604.

However, the public is invited to submit comments on the extent of the impact of the proposed amendments on small entities.

DRAFTING INFORMATION

The principal author of this document was Charles D. Ressin, Regulations Control Branch, Office of Regulations and Rulings, U.S. Customs Service. However, personnel from other Customs offices participated in its development.

PROPOSED AMENDMENTS

It is proposed to amend Part 19, Customs Regulations (19 CFR Part 19), in the following manner:

PART 19—CUSTOMS WAREHOUSES, CONTAINER STATIONS AND CONTROL OF MERCHANDISE THEREIN

1. It is proposed to revise the introductory paragraph of section 19.40, Customs Regulations (19 CFR 19.40), the first "Whereas" clause of the Preamble to, and Condition 5 of, the Containerized Cargo Bond (Term) which follow section 19.40 to read as follows:

CONTAINER STATIONS

19.40 Establishment of container stations.

A container station, independent of either the importing carrier or bonded carrier, may be established at any port or portion of a port, or any other area under the jurisdiction of a district director upon the filing of an application therefor and its approval by the district director and the posting, in the sum of $25,000 or such larger amount as the district director shall determine, of a bond in the following format:

Port of———————————————————

No.———————————————————

UNITED STATES CUSTOMS SERVICE CONTAINERIZED CARGO BOND (TERM)

* * * * * * *

Whereas, the above-bounden principal has requested, or will request, permission to remove imported containers, truck trailers, lift vans or vehicles (hereinafter referred to as containers) containing merchandise or baggage (hereinafter referred to as merchandise)from the place of unlading from an importing vessel, vehicle or aircraft of the ———,

for transportation to the ——— terminal(s) at ———, or to receive such containers at said location from a bonded carrier after transportation in-bond, for a period beginning on the ——— day of ———, 19 ——, and ending on the ——— day of ———, 19 ——, both days inclusive; and

* * * * * * *

(5) And if pursuant to proper permit by the district director of Customs the above-bounden principal shall remove imported containers from the place of unlading from importing vessels, vehicles, or aircraft and land, place, or store any merchandise in the containers in the above-mentioned terminal(s) of the principal or on lighters, piers, landing places, or spaces adjoining thereto, or such other places permitted by the district director on special request made by the principal hereon, or shall receive such containers at said location from a bonded carrier after transportation in-bond, and shall retain such merchandise in the containers at such places until a permit for the removal thereof is granted, and, in the event that any such merchandise in the containers shall be removed therefrom before proper permits have been issued, shall pay all duties, taxes, charges, and exactions accruing on any part of the merchandise in the containers so removed; or in the event the merchandise in the containers so removed is free of duty, shall pay as liquidated damages an amount equal to the value of such merchandise contained in the containers, the damages on any one shipment not to exceed $500 (it being understood and agreed that the amount to be collected in either case shall be based upon the quantity and value of such merchandise in the containers as determined by the district director, and that the decision of the district director as to the status of such merchandise, whether free or dutiable, together with the rate and amount of duties, taxes, charges, and exactions also shall be binding on all parties to this obligation, it is further understood and agreed that liability under this instrument attaches for all shortages whether discovered before or after the filing of any form of entry);

* * * * * * *

2. It is proposed to revise section 19.41, Customs Regulations (19 CFR 19.41), to read as follows:

19.41 Movement of containerized cargo to a container station.

Containerized cargo may be moved from the place of unlading to a designated container station, or may be received directly at the container station from a bonded carrier after transportation in-bond, before the filing of an entry of merchandise therefor or the permitting thereof (see subpart A of

Part 158 of this chapter) for the purpose of breaking bulk and redelivery of the cargo.

3. It is proposed to revise section 19.43, Customs Regulations (19 CFR 19.43), to read as follows:

19.43 Filing of application.

The application, listing the containers by marks and numbers, may be filed at the customhouse or with the Customs inspector at the place where the container is unladen, or for merchandise transported in-bond, at the bonded carrier's facility, as designated by the district director.

4. It is proposed to revise section 19.44, Customs Regulations (19 CFR 19.44), to read as follows:

19.44 Carrier responsibility.

(a) If merchandise is transferred directly to a container station from an importing carrier, the importing carrier shall remain liable under the terms of its bond for the proper safekeeping and delivery of the merchandise until it is formally receipted for by the container station operator.

(b) If merchandise is transferred directly from a bonded carrier's facility to a container station or is delivered directly to the container station by a bonded carrier, the bonded carrier shall remain liable under the terms of its bond for the proper safekeeping and delivery of the merchandise until it is formally receipted for by the container station operator.

(c) In either case under paragraph (a) or (b), the importing carrier and the bonded carrier, as applicable, shall be responsible for assuring that the provisions of Subpart A, Part 158 of this chapter, relating to quantity determinations, and discrepancy reporting and accountability are followed.

(d) The importing carrier and the bonded carrier, as applicable, shall indicate concurrence in the transfer of the merchandise either by signing the application for transfer or by physically turning the merchandise over to the operator.

(e) The importing carrier and the bonded carrier, as applicable, shall be responsible for ascertaining that the person to whom a container is delivered for transfer to the container station is an authorized representative of the operator.

(f) The importing carrier and the bonded carrier, as applicable, shall furnish an abstract manifest showing the bill of lading number, the marks and numbers of the container, and the usual manifest description for each shipment in the container.

WILLIAM T. ARCHEY,
Deputy Commissioner of Customs.

Approved: October 26, 1981.

JOHN M. WALKER, JR.
Assistant Secretary of Treasury.

[Published in the Federal Register, Nov. 30, 1981 (46 FR 58090)]

United States Court of Customs and Patent Appeals

NOTICE

November 19, 1981.

To: Beatrice Ball, Customs Service

From: Ruth A. Butler, Administrative Services Officer

Subj.: Customs Opinions

The court has decided to discontinue use of C.A.D. numbers beginning with Volume 69. Effective immediately, cases will be identified by the appeal number.

RUTH A. BUTLER,
Administrative Services Officer.

U.S. Court of Customs and Patent Appeals

Appeal No. 81-6

THE UNITED STATES *v.* J. E. MAMIYE & SONS

1. CLASSIFICATION—Tote bags Considered as Handbags Under Item 706.24

Customs Court decision holding certain tote bags to be classifiable as handbags under item 706.24, Tariff Schedules of the United States, affirmed.

2. ID.—Definition of Handbag

Handbag is used in its broadest sense to cover all types of bags carried in the hand or on the arm.

3. ID.

Under item 706.24, handbags was not intended to be interpreted in a way which inherently excludes shopping bags.

4. ID.—Definition of Shopping Bags

Shopping bags, being an exception, must be strictly construed; primary use must be to carry purchased articles from the place of purchase to the place of use.

5. ID.—Use of Tote Bags

Tote bags of the types here in issue, while useful for shopping, are primarily used as a second handbag for the convenience of carrying additional personal articles that would not fit in one handbag.

F. 2d

UNITED STATES, APPELLANT, *v.* J. E. MAMIYE & SONS, INC., APPELLEE

No. 81-6

United States Court of Customs and Patent Appeals, November 19, 1981, Appeal from United States Court of International Trade, C.D. 4878.

[Affirmed]

Thomas S. Martin, Acting Asst. Atty. General, *David M. Cohen*, Director, *Joseph I. Liebman* and *Jerry P. Wiskin*, attorneys for appellant.

Steven P. Florsheim, Robert B. Silverman and *Saul Davis*, attorneys for appellee.

[Oral argument on October 5, 1981 by *Jerry P. Wiskin* for appellant and *Saul Davis* for appellee.]

Before MARKEY, *Chief Judge*, RICH, BALDWIN, MILLER, and NIES, *Associate Judges*.

NIES, *Judge*.

[1] This is an appeal from the decision of the U.S. Customs Court,[1] ——Cust. Ct.——, C.D. 4878, 509 F. Supp. 1268 (1980), holding certain "tote bags" to be properly classifiable as "handbags" under item 706.24, Tariff Schedules of the United States (TSUS),[2] and not as textile articles not specially provided for under item 389.60 (now 389.62), TSUS,[3] as claimed here by appellant. We affirm.

---

[1] The U.S. Customs Court was renamed the United States Court of International Trade, effective November 1, 1980, by the Customs Courts Act of 1980, Pub. L. 96-417, 94 Stat. 1727 (1980).

[2] Item 706.24, TSUS, provides as follows:

[3] Item 389.60, TSUS, was renumbered item 389.62, TSUS, by Executive Order 11974 of February 25, 1977

SCHEDULE 7—Specified Products; Miscellaneous and Nonenumerated Products

PART 1—Footwear; Headwear and Hat Braids; Gloves; Luggage, Handbags, Billfolds, and Other Flat Goods.

* * * * * * *

SUBPART D.—Luggage; Women's and Children's Handbags; and Billfolds, Card Cases, Coin Purses, and Similar Flat Goods

Subpart D headnotes:

* * * * * * *

2. For the purposes of the tariff schedules—

* * * * * * *

(b) the term "handbags" covers pocketbooks, purses, shoulder bags, clutch bags, and all similar articles, by whatever name known, customarily carried by women or girls, but not including luggage or flat goods as defined herein or shopping bags; and

* * * * * * *

Luggage and handbags, whether or not fitted with bottle, dining, drinking, manicure, sewing, traveling, or similar sets; and flat goods:

* * * * * * *

Of textile materials (except yarns, of paper), whether or not ornamented:

* * * * * * *

Other:

Of vegetable fibers and not of pile or tufted construction:

* * * * * * *

706.24	Other	20% ad val.

Item 389.62, TSUS, provides as follows:

SCHEDULE 3—Textile Fibers and Textile Products

* * * * * * *

PART 7—Miscellaneous Textile Products; Rugs and Scrap Cordage

* * * * * * *

SUBPART B—Textile Articles Not Specially Provided for

* * * * * * *

Articles not specially provided for, of textile materials:

* * * * * * *

Other articles, not ornamented:

* * * * * * *

Of manmade fibers:

* * * * * * *

Other:

* * * * * * *

389.62	Other	25¢ per lb. + 15% ad val.

Facts

The subject bags consist of various styles of textiles fabric bags, referred to as "totes" or "tote bags," entered under 20 separate entries. During trial, the parties stipulated that Exhibits 1 through 5 were representative of all the entries. The five tote bags are all generally rectangular in shape with an opening at the top extending across the full width of the bag. Each has two cloth handles, one on either side of the opening. Exhibit 1 comes with a detachable small purse with a zipper closure and has an outside pocket. Exhibit 3 has a single snap closure in the middle of the top opening. None of the five exhibits has an inside pocket. Some bags are in plain solid colors; others have simple letter graphics; and one displays a street scene. Some are constructed of a single piece of fabric folded and sewn on one side and the bottom. Others have gussets in the sides and seams finished with edging. One bag has a separate lining.

Upon entry, the bags were classified as articles not specially provided for, of textile materials, under item 389.60, TSUS. Plaintiff-appellee protested, alleging the items to be properly classifiable as handbags under item 706.24, TSUS. The Government answered saying the bags are shopping bags and, therefore, not classifiable as handbags.

At trial, eighteen witnesses were called and fifty-three exhibits were received in evidence. Judge Ford, in his opinion, carefully reviewed the evidence and we will not repeat it here. *See* —— Cust. Ct. at ——, 509 F. Supp. at 1269–74. Based on this evidence Judge Ford found that the bags of the type here in issue are customarily carried by women or girls as an auxiliary or second handbag, properly classifiable under item 706.24, TSUS.

Issue

Are the subject articles "handbags" but not "shopping bags" within the meaning of Schedule 7, Part 1, Subpart D, TSUS?

Requirements for Handbags Under Schedule 7, Part 1, Subpart D

The first question which must be resolved is whether the tote bags in issue are "handbags" within the meaning of that term as used in Schedule 7, Part 1, Subpart D, Headnote 2(b) supra, n.2.[4] If the merchandise is not a type of handbag, no consideration need be given to whether appellee's goods fall within the exception which excludes "shopping bags."

The Government asks that we give the term "handbags" a narrow meaning which would limit "handbags" to those bags which are

[4] The meaning of a tariff term is a matter of law and, accordingly, may be properly raised on appeal. *United States* v. *National Carloading Corp.*, 48 CCPA 70, C.A.D. 767 (1961), and cases cited therein.

constructed so that a woman can securely carry a wallet and other personal items. In the Government's view, tote bags which are carried open or have no secure closure and which are designed to carry bulky items inherently are not "handbags."

Definitions of "handbag" in standard reference works extant at the time the statute was enacted in 1962, as well as more current editions, support a broader definition than that proposed by the Government:

> (1) Webster's Third New International Dictionary of the English Language, Unabridged Edition (1961 ed.), p. 1026:
> handbag: 1: traveling bag; 2: a woman's bag made in various shapes of fabric, leather, or plastic, held in the hand or looped by handles over the shoulder, and used for carrying usu. small personal articles and accessories.
> (2) Collier's Funk & Wagnalls Standard Dictionary of the English Language, International Edition (1962 ed.) p. 572:
> handbag: A small, portable bag, as a small satchel or a woman's purse.
> (3) Random House Dictionary of the English Language, Unabridged Edition, (1973 and 1980 eds.), p. 642:
> handbag: 1. a bag or box of leather, fabric, plastic, or the like, for carrying in the hand or under the arm or by suspending from the arm or shoulder, commonly used by women for carrying money, toilet articles, small purchases, etc. 2. valise.

[2] The subject tote bags are "handbags" within the above definitions and we see no basis for holding that the statute should be interpreted as meaning something else. Indeed, the structure of the statute clearly indicates that Congress used the term in its broadest sense, covering all types of bags carried in the hand or on the arm. This is the most logical interpretation when consideration is given to the exceptions which were created. Since it must be presumed that Congress did not use superfluous language in the statute (*United States* v. *Avdel Corp.*, 64 CCPA 44, C.A.D. 1182, 546 F.2d 901 (1977)), there would be no need to exclude shopping bags and luggage specifically if they were not otherwise included.[5] The only statutory limitation is that the handbags must customarily be carried by women or girls, a limitation which is unquestionably satisfied by the subject tote bags. The articles must, therefore, be classified under item 706.24 unless they are shown to fall under the exclusion for "shopping bags." [6]

---

[5] Since the intent of Congress is ascertainable from the statute, we need not consider the arguments of the parties whether the subject bags are *ejusdem generis* with the named handbag styles. *Sandoz Chemical Works, Inc.* v. *United States*, 50 CCPA 31, C.A.D. 815 (1963).

[6] [2] The Government's further argument that the subject tote bags are not handbags *because* they are shopping bags is also rejected. That these articles may not be classified or subjected to duty under item 706.24, TSUS, because of the exclusion therefrom if they are shopping bags, is a result of the specific exclusion, not because the term "handbags" was intended to be interpreted in a way which inherently excludes them.

Meaning of "Shopping Bags"

The second basis advanced for overturning the judgment below is that, if the subject tote bags are held to be generally within the scope of the term "handbags," they nevertheless fall within the exclusion provided for "shopping bags."

The purpose or intent of Congress in excluding "shopping bags" from Subpart D is nowhere reflected in the legislative history of the TSUS. Nor is the term "shopping bag" to be found in any edition of various recognized lexicographic authorities which have been consulted. Moreover, the parties have cited none.

The parties agree that disposable paper or plastic bags with handles, generally square or rectangular in shape, which are routinely used to package purchased goods at the time of sale are shopping bags. Appellee would have us limit the term to such bags—what might be called packaging type shopping bags. The Government, on the other hand, asserts that "tote bags" were developed in England during World War II to avoid the tax on "handbags" and were called "shopping bags"; that the disposability of paper and plastic shopping bags reflected the tenor of the post-World War II society of the 1950's and early '60's; that the energy and natural resource conscious society of the '70's led to the popularity of fabric bags to be used for the same purpose for which plastic and paper shopping bags had heretofore been used; and that even the packaging type shopping bags are not limited in use to carrying purchases home from the store but are frequently used or re-used to carry personal effects.

The Government concludes that the bags in question, made of textile material, are the "in vogue, durable and reusable shopping bags of today."

[4] Since we have no specific guidelines from Congress and only personal divergent views of witnesses as to the types of bags the term "shopping bags" encompasses, it is appropriate to rely on the usual rule of statutory construction that an exception which carves out something which would otherwise be included must be strictly construed.[7] *Corn Products Co.* v. *Commissioner*, 350 U.S. 46 (1955); *De Haan Co.* v. *United States*, 55 CCPA 76, C.A.D. 936 (1968); *Joleo Impex Co.* v. *United States*, 45 Cust. Ct. 6, C.D. 2189 (1960). Accordingly, we construe the term "shopping bag" to mean a bag primarily used for shopping, that is, for carrying purchased articles from the place of purchase to the place of use.[8] The court below found

[7] If these bags are neither handbags nor luggage, they would then be classified under 389.62, TSUS, a basket provision. Giving a strict construction to shopping bags is in line with one of the purposes of the TSUS, viz., to deemphasize the importance of and restrict the scope of tariff basket provisions. *United States* v. *A. Johnson & Co.*, 66 CCPA 35, C.A.D. 1218, 588 F.2d 297 (1978).

[8] While packaging type shopping bags may also in fact be re-used for a variety of purposes, we do not consider that such use negates that these bags are chiefly used for shopping.

that [5] tote bags of the types here in issue, while useful for shopping, are primarily used as a second handbag for the convenience of carrying additional personal articles that would not fit in one handbag. The record amply supports this conclusion that the chief use is to carry articles already in one's possession, such as books, packed lunches, umbrellas or extra shoes.[9]

Appellant finally argues that regardless of the classification of tote bags generally, the evidence in this case establishes that appellee's tote bags are promoted and used as shopping bags. In particular the Government principally relies upon collective Exhibit 6 which consists of advertisements used by the purchasers of appellee's tote bags, all of whom offered the bags as premiums with the purchase of other items. None indicates that shopping is the sole or even the chief use of the bag. Exhibit 6A shows a photograph of one style of appellee's tote bags containing books offered to new subscribers of a book club. Purchases of these books would obviously be made by mail, not by shopping. Exhibit 6B refers to another of appellee's tote bags as a "canvas carryall." Exhibit 6C identifies yet another as a "multipurpose tote bag." Exhibit 6D, an advertisement used by another book club, states that the bag is:

> Designed for durability plus flair, this roomy tote is ready to go shopping or picnicking, to the office or to the beach.

Appellee's witness testified that these uses are typical for all of the subject tote bags. Appellant's position is not supported by the record.

Conclusion

The judgment of the Court of International Trade that the subject merchandise is properly classifiable under item 706.24, TSUS, is *affirmed.*

Hiranport Company v. *United States Treasury Department* Acting by and Through the United States Customs Service

1. Order of Dismissal for Failure to Dispose of Action by Trial or Otherwise—Abuse of Discretion by Court of International Trade

No abuse of discretion in dismissal for appellant's failure to dispose of action by trial or otherwise in accordance with order of court or in denying motion for reinstatement and extension of time for disposition.

2. Id.—Specious Grounds for Abuse

---

[9] Judge Ford was, therefore, correct in not adopting the rationale of *Adolco Trading Co.* v. *United States*, 71 Cust. Ct. 145, C.D. 4487 (1973), to the extent it was based on physical characteristics of a bag rather than chief use.

That Government needed time to answer appellant's interrogatories is specious grounds for appellant's request for extension of date set by court order.

3. Id.

Representations made to the court in previous motions negate sufficiency of other grounds.

F. 2d

HIRANPORT COMPANY, APPELLANT, *v.* UNITED STATES TREASURY DEPARTMENT, ACTING BY AND THROUGH THE UNITED STATES CUSTOMS SERVICE, APPELLEE

No. 81-14

United States Court of Customs and Patent Appeals, November 19, 1981, Appeal from United States Court of International Trade.

[Affirmed]

Robert G. Burt, and *David R. Ludwig*, attorneys for appellant.

J. Paul McGrath, Asst. Attorney General, *David M. Cohen*, Branch Director, and *Sheila N. Ziff*, attorneys for appellee.

[Oral argument on November 2, 1981 by *David R. Ludwig* for appellant and *Shiela N. Ziff* for appellee.]

Before MARKEY, *Chief Judge*, RICH, BALDWIN, MILLER, and NIES, *Associate Judges*.

NIES, *Judge*.

[1] This appeal is from an order of the United States Court of International Trade granting the Government's motion to dismiss for appellant's failure to dispose of this action by trial or otherwise by October 15, 1980, and from the refusal of the court to grant appellant's motion to reinstate the case and extend the time for disposition until March 15, 1981 (or October 15, 1981). Appellant charges the trial court with abuse of its discretion. We affirm.

OPINION

Given that this case was filed on July 7, 1978, that on two previous occasions the court had granted appellant additional time after appellant failed to prosecute,[1] and that the order of the court entered August 4, 1980, in reinstating the case, specifically required that appellant at least be ready for trial by October 15, 1980, we hold that there was no abuse of discretion in the court's denial of appellant's motion for an extension of that date, good cause not having been

[1] On appellant's motion, after a 30 day notice of dismissal for failure to prosecute issued on November 8, 1979, discovery was extended until May 1, 1980. Appellant failed to meet that date and did not move for additional time prior thereto. An order of dismissal was entered on June 10, 1980.

shown. [2] Appellant's motion for an extension of time was not made until October 15, 1980, and was based solely on the specious ground that additional time was required for the convenience of the Government to answer interrogatories which appellant had not served until October 14, 1980.

In its motion for rehearing dated December 30, 1980, appellant gave the explanation that appellant's counsel was unable to serve the interrogatories sooner because of the [3] disruption caused by reorganization of the law firm at the time the order was entered. However, in obtaining the August 4, 1980 order appellant's counsel had represented to the court that the interrogatories were ready for service in June and would have been served but for the dismissal that was entered on June 10, 1980. Appellant's further explanation that counsel did not understand the procedure of the court and was misled in some way by a clerk's response to his inquiry made on October 14, 1980, does not explain appellant's failure to have served the interrogatories in ample time to be ready to proceed to trial as required by the court's order. It was well within the discretion of the trial court to find appellant's motion for rehearing inadequate to justify reinstating the case.

Accordingly, the decision of the Court of International Trade is *affirmed*.

Affirmed

United States Court of International Trade

One Federal Plaza
New York, N.Y. 10007

Chief Judge

Edward D. Re

Judges

Paul P. Rao
Morgan Ford
Scovel Richardson
Frederick Landis
James L. Watson
Herbert N. Maletz
Bernard Newman
Nils A. Boe

Senior Judge

Samuel M. Rosenstein

Clerk

Joseph E. Lombardi

Decisions of the United States Court of International Trade

(Slip Op. 81–101)

ALDRICH CHEMICAL COMPANY, INC., PLAINTIFF *v.* THE UNITED STATES, DEFENDANT

Court No. 78–6–01082

Before WATSON, Judge.

ALKALOID

Cytochalasin B, a nitrogenous compound derived from a fungus and used in cytological research is found to be properly classifiable

as a natural alkaloid. The Court examines various scientific authorities and resolves a conflict of expert testimony in plaintiff's favor.

[Judgment for plaintiff]

(Decided November 9, 1981)

Foley & Lardner (*Bernard E. Edelstein* and *Jon P. Christiansen* at the trial and on the briefs) for the plaintiff.

J. Paul McGrath, Assistant Attorney General; *Joseph I. Liebman*, Attorney in Charge, International Trade Field Office Commercial Litigation Branch (*Saul Davis* at the trial and on the brief) for the defendant.

WATSON, *Judge:* In this test case the Court is faced with a dispute regarding classification of 13 entries of an organic chemical compound named Cytochalasin B, which were imported imported during the years 1977, 1978 and 1979. The compound was classified under the provision for other nitrogenous compounds of Item 425.52 of the Tariff Schedules of the United States (TSUS) and assessed with duty at the rate of 1.5¢ per lb. plus 7.5 percent ad valorem. The plaintiff claims that the proper classification should be as other natural alkaloids and their compounds not artificially mixed under Item 437.22, dutiable at the rate of 2 percent ad valorem.

There is no dispute that this compound is nitrogenous. However, because alkaloids are one of many groups of nitrogenous compounds, classification as an alkaloid, if proven, would be more specific. Attention must therefore be focused on the question of whether Cytochalasin B is an alkaloid. On this question the parties offered conflicting expert testimony and a plethora of scientific treatises.[1]

The Court found the expert testimony and evidence offered by plaintiff to be the more impressive. This included the testimony of Dr. James Cook, a professor of Chemistry at the University of Wisconsin and a specialist in alkaloidal chemistry, and Dr. Alfred Bader, president of plaintiff and a distinguished chemist with long experience in the sale of chemicals.

From the testimony and evidence, the Court finds that Cytochalasin B is a metabolite of a fungus, that is to say, it is a product of the normal metabolic functioning of a fungus. Its name is a compound of the Greek words for "cell" and "relaxation," a reference to its ability

[1] In connection with an issue discussed at footnote 6, the Court reserved decision on the admission of Defendant's exhibits F and G for identification and now excludes the former and admits the latter. Exhibit F for identification is a copy of an article from a publication entitled "Carolina Tips" and is copyright by the Carolina Biological Supply Company. It does not have the appearance of a standard or authoritative source. Exhibit G shows itself to be from a standard reference work entitled *Dictionary of The Fungi* by G.C. Ainsworth (Commonwealth Mycological Institute, Kew, Surrey 1971) and can be accepted as such. In the use of reference works in the determination of the meaning of tariff terms the Court continues to rely on authoritative publications introduced in evidence, appended to briefs or located in its own researches. See *Schott Optical Glass, Inc.* v. *United States*, 67 CCPA,—— C.A.D. 1239, 612 F. 2d 1283, 1285 (1979); *Trans-Atlantic Co.* v. *United States*, 60 CCPA 100, 471 F. 2d 1397 (1973).

357-930 O - 81 - 5

to inhibit the normal division of cells. As a consequence, it is used in cytological research, in the study of genetics or biological processes.

To obtain Cytochalasin B the fungus is grown on a medium and then extracted with chloroform. The extract is subjected to silica gel chromatography which, by a process of selective adsorbtion in a column, yields first Cytochalasin A, then A mixed with B. Cytochalasin B is separated off and crystallized. In structure it has several rings, one of which is a heterocyclic ring containing a nitrogen atom bonded to a carbonyl.

Plaintiff's argument was threefold: First, it argued that the best modern authority includes Cytochalasin B among the alkaloids. Second, it argued that even the "classical" definition of alkaloids adopted by the government would properly include Cytochalasin B. Third, it argued that the proliferation of discoveries in the field of alkaloidal chemistry required a new and more accurate definition of the term "alkaloid." It offered such a definition, under which Cytochalasin B would undoubtedly be an alkaloid.

Defendant responded to these arguments by citing what it considered to be contrary authority on the scientific recognition of Cytochalasin B as an alkaloid, by arguing that Cytochalasin B departed from the classical definition in a number of respects, and by offering criticisms of plaintiff's new definition.

On plaintiff's first point it stressed the discussion of Cytochalasin B in the section on miscellaneous alkaloids in *Specialist Periodical Reports, The Alkaloids*, Vol. 6 [Exhibit 23] and the inclusion of other Cytochalasin compounds in Vols. 5 and 7 [Exhibits 21 and 22]. It characterized the *Specialist Periodical Reports*, published by the Chemical Society of London, as the most up-to-date and comprehensive work on the subject of alkaloids, a characterization which was not effectively challenged.

Defendant countered with the inclusion of phomin (another name for Cytochalasin B) in a chapter on non-alkaloidal nitrogen compounds in Nakanishi, *Natural Products Chemistry*, Vol. 2 (1975) [Exhibit A]. Defendant also sought to lessen the authority of the *Specialist Periodical Reports* by arguing that it lists many compounds which assertedly are not alkaloids such as penicillin, and maytansine.

However, when the Court considers that Nakanishi is a general work on natural compounds, only a portion of which is devoted to alkaloids, and further, that Nakanishi refers readers to *Specialist Periodical Reports* for additional information on alkaloids, the primacy of the latter is sufficiently established. Furthermore, the inclusion of compounds such as penicillin in *Specialist Periodical Reports* does not discredit it. While it may be better known as an antibiotic, from a

structural standpoint, penicillin and certain other antibiotics can be properly placed in the family of alkaloids.

The weight of plaintiff's evidence was not diminished by proof that Cytochalasin B was not listed in other publications such as Glasby, *Encyclopedia of the Alkaloids* [2] (Vols. I–III, 1975–1977) and Manske, *The Alkaloids*. First, considering the magnitude of the field, the absence of a listing does not permit the inference that the author had considered the question and second, the authors acknowledge the inevitability of omissions in a work covering a field as large as that of alkaloidal chemistry. In addition, Manske was proven to be somewhat dated.

Finally, on this first point, defendant's proof that the cytochalasins are also referred to in scientific literature as microbial or active metabolites,[3] mold metabolites [4] of fungal metabolites [5] is not inconsistent with proper denomination as an alkaloid. It cannot be expected that writers in a field in which there are acceptable alternative ways to describe a given compound will use a single term and it is certainly understandable that they may wish to use a term which emphasizes the source or function of the compound rather than its membership in a general class of chemical compounds.

In sum then, as regards usage in the scientific community, the Court is satisfied that Cytochalasin B is considered an alkaloid.

On the second point of conformity to the traditional definition of alkaloids the Court agrees with plaintiff. The Court finds that even assuming the correctness of the definition of alkaloids advocated by the defendant, it would not exclude Cytochalasin B.

The traditional definition appears with varying degrees of reservation in a number of texts. A good example is the definition given in G.A. Swan, *An Introduction to the Alkaloids*, (1967) p. 1 [Exhibit 24].

It is not easy to give an exact definition of what is meant by an alkaloid. In a broad sense, alkaloids are nitrogenous bases which occur naturally in plants. They nearly always contain their nitrogen as a part of a heterocyclic system and are often quite complex in structure. A particular alkaloid is usually restricted to certain genera and families of the plant kingdom, rarely being present in large groups of plants. In addition, the alkaloids usually show specific pharmacological activity. However there is no very sharp distinction between alkaloids and many other naturally occurring nitrogenous compounds. For

---

[2] Defendant's argument that Professor Glasby must have known of Cytochalasin B (because he worked for the company that discovered it) and therefore must be presumed to have considered and decided against its treatment as an alkaloid is rejected as highly speculative.

[3] Binder and Tamm, *The Cytochalasans* [sic]: *A New Class of Biologically Active Microbial Metabolites* [Exhibit E].

[4] *The Merck Index* (9th Ed.) p. 365.

[5] 83 Chem. Abstracts 23529, No. 23504V.

example, colchicine is regarded as an alkaloid because, although it is not heterocyclic and is scarcely basic (it is, in fact, an amide), it is active pharmacologically and is of restricted botanical distribution. On the other hand, Thiamine, although is it a heterocyclic, nitrogenous base, is not classed as an alkaloid because it is universally distributed in living matter. Biosynthetically, the alkaloids are related to the amino acids.

The defendant's version of the traditional definition requires that a compound be of plant origin, nitrogenous, basic, heterocyclic and of complex structure [Exhibits 20, 24, 25 and A]. In the Court's opinion, plaintiff has proved that Cytochalasin conforms to this definition in all but one respect [6] and in that respect it is in the company of numerous non-basic alkaloids. Before tiring, plaintiff's expert witness was able to find 162 nonbasic compounds treated as alkaloids by Professor Glasby. The Court was additionally persuaded by the fact that Colchicine, which is also used for cytological research, is a recognized alkaloid despite the fact that it is neither basic nor heterocyclic. In the same vein, Professor Glasby recognizes Maytansine, which is derived from a fungus and is not basic.

On the issue of definition the Court found the testimony of plaintiff's witness Dr. Cook to be the more persuasive.

Defendant's expert witness was Dr. Edwin Vedejs, also a professor of chemistry at the University of Wisconsin. At the trial, the Court reserved its decision on declaring Dr. Vedejs to be an expert witness. It did so due to some reservations it had on the extent of his work with alkaloids and on the fact that his familiarity with Cytochalasin B was limited to unsuccessful attempts to synthesize it. Upon reflection, the Court accepts his expertise in this area although it is inclined to give greater weight to the opinion of one whose experience is more completely devoted to the field of alkaloids.

In addition, the impact of Dr. Vedejs' testimony was somewhat lessened by his unfamiliarity with Professor Glasby's reference work on alkaloids, his disagreement with defendant's position that an alkaloid must be heterocyclic and his refusal to recognize such accepted alkaloids as caffeine or theobromine. Furthermore, he sought to distinguish Cytochalasin B from other alkaloids derived from Phenylalanine by stating that all the others lost their carbon dioxide molecule in the process. However this is evidently not true of Cyclopenin and Cyclopenol, both of which retain carbon dioxide during biosynthesis from

[6] Defendant's argument that fungi are not plants is rejected. Although there admittedly is a divergence of views regarding whether fungi are part of the plant kingdom, the more widespread view is that they are plants. On this point the Court is also influenced by the acknowledged acceptance as an alkaloid, of ergotamine, notwithstanding the fact that it is derived from a fungus. Moreover, when it is considered that the ergot alkoloids are among the oldest recognized alkoloids, the making of a distinction in this area between higher and lower plants seems artificial.

Phenylalanine.[7] Finally, and more generally, the Court found inconsistency in his overall acknowledgment of imprecision in the traditional definition of alkaloids and his attempt to foster a strict standard for excluding Cytochalasin B.

In the final analysis, the Court did not try to arrive at a new and more accurate definition of alkaloids, although plaintiff's proposed definition did appear to be more satisfactory.[8] This was not necessary in light of its conclusion that Cytochalasin B is an alkaloid within the traditional definition. Nor is the Court of the opinion that it ought to undertake to define so specialized a term in a manner which has not yet gained acceptance in the field, even though the traditional definition is losing its value. At least it should not do so unless there is no other way to arrive at a decision.

Defendant made a final argument that the importation was not shown to be a natural substance within the meaning of the claimed classification and the definition in Schedule 4, Part 3, Headnote 3(a), which defines natural substances as substances found in nature and which have not had changes made in their molecular structure. However, it is the Court's view that the plaintiff's expert testimony clearly demonstrated that Cytochalasin B was a natural product of the fungus. Furthermore, Dr. Cook testified that Cytochalasin B had not been synthesized.[9] Dr. Vedejs testified that he had not been able to complete a synthesis.

Defendant also stressed the use of a synthetic medium on which to grow the fungus. This has no more bearing on the naturalness of the Cytochalasin B than a synthetic diet for cows would have on the naturalness of their milk. The use of radioactively labelled Phenylalanine by Binder and Tamm in their successful effort to discover how the fungus produced Cytochalasin B does not mean that radiocative Phenylalanine is needed for the normal production. The actual method extracting Cytochalasin B is set out in D. Aldridge, et al., "The Structures of Cytochalasins A and B," Journal Chem. Soc. (c) 1667–76 (1967) attached as Appendix K to plaintiff's reply brief. No radioactive Phenylalanine is used in the extraction and further, the Court is

[7] See p. 15, Vol. I, *The Alkaloids, Specialist Periodical Reports* (1971) and L. Nover and M. Luckner, *On the Biosynthesis of Cyclopenin and Cyclopenol, Benzoliazepine Alkaloids from Penicillium Cyclopium Westling*, 10 European Journal of Biochemistry 268, 270 (1969) attached respectively as Appendice I and J to Plaintiff's reply brief.

[8] Dr. Cook eliminated the basic and heterocyclic requirements. He focused instead on alkaloids being nitrogenous substances which are secondary metabolites produced in plants. The nitrogen atom may be incorporated into the alkaloid molecule as an amine (weakly basic) an amide (neutral properties), as a non-basic N-Oxide group, or a basic quaternary ammonium salt. Finally, his definition states that many alkaloids demonstrate intense biological or pharmacological activity.

[9] This is the Court's understanding of his testimony as recorded at page 56 of the transcript:

Q. Do you know if Cytochalasin B has ever been derived by synthesis?

A. It has been. Cytochalasin C was synthesized by Stork. I don't believe it has been . . . I haven't seen the paper in the last year . . . if "B" has been synthesized.

The government seized on the first part of the response, which distorts the true meaning of the answer.

satisfied that whatever Phenylalanine is present in the fungus at intermediate stages is present naturally.

In this case plaintiff proved that Cytochalasin B was an unmodified natural product and the burden thereafter fell on the government to prove otherwise.

For the above reasons, based on its evaluation of the evidence and the expert testimony, the Court finds that Cytochalasin B is a natural alkaloid and should be classified as such.

Judgment will enter accordingly.

(Slip Op. 81–102)

NORMAN G. JENSEN, INC., PLAINTIFF *v.* UNITED STATES, DEFENDANT

Court No. 76–4–01016

Before RICHARDSON, *Judge*

Animal Feeds

SCREENINGS—GROUND OR NOT GROUND—WORDS OF EXTENSION—EO NOMINE PROVISION

Grain screenings pellets exported from Canada and classified in liquidation upon entry at Blaine, Washington, under TSUS item 184.75 as animal feeds, not specially provided for, *Held*, properly classifiable as claimed under TSUS item 184.47 as screenings, ground or not ground, where it is conceded that the imported pellets are a form of screenings, and the descriptive term *ground or not ground* must be read as a term of extension and not as a term of limitation in the absence of any indication in the legislative history of the provision of a Congressional intention to limit the forms of screenings imported.

[Judgment for plaintiff.]

(Decided November 12, 1981)

George R. Tuttle, A Professional Corporation (*Stephen S. Spraitzar* at the trail and on the briefs) for the plaintiff.

J. Paul McGrath, Assistant Attorney General; *Joseph I. Liebman*, Attorney in Charge, International Trade Field Office, Commercial Litigation Branch (*Madeline B. Kuflik* at the trial and on the brief); for the defendant.

RICHARDSON, *Judge:* The merchandise in this case, described on invoices as "grain screenings pellets", was exported from Canada between May and September of 1971, and classified in liquidation

upon entry at Blaine, Washington, under TSUS item 184.75 as modified by T.D. 68–9 as animal feeds, not specially provided for, other, at the duty rate of 8 *per centum ad valorem*. Plaintiff claims that the merchandise should be classified under TSUS item 184.47 as modified by T.D. 68–9 as grain screenings, ground or not ground, other, free of duty.

In the pleadings defendant admits that the imported merchandise consists of grain and seed screenings which undergo a pelleting process [amended complaint, paragraph 9]. And, although initially placed in issue, defendant admitted at the conclusion of the trial that the imported pellets are a form of grain and seed screenings [defendant's brief, page 4, footnote 3]. Additionally, plaintiff has expressly admitted that the imported pellets were chiefly used as food for animals on or about the dates of importation [exhibit A]. In view of these admissions the issue presented for disposition by the court is whether the merchandise at bar is more specifically provided for in item 184.47 as *claimed* than in item 184.75 as *classified*.

The evidentiary record indicates that the imported merchandise consists of screenings from a grain elevator in British Columbia, Canada. The screenings, composed of wild oats, dust (chaff), small weed seeds, and small broken grains, undergo a grinding process to degerminate the weed seeds. Because the grinding does not degerminate the smaller weed seeds, the screenings are run through a pellet mill which utilizes pressure and heat to degerminate the weed seeds that were not removed in the grinding process. Thereafter, lignosite, in the amount of 1%, is added to the screenings as a *binder*, and the product is pelletized to facilitate transportation and storage. The merchandise is bought and sold as screenings and is recognized as such by persons in the trade.

Plaintiff contends that item 184.47 is an *eo nomine* provision which provides for all forms of screenings including pelleted screenings. Plaintiff argues that the pelleting process does not cause the imported merchandise to lose its identity as "screenings". Plaintiff also contends that item 184.47 more specifically describes the imported pellets than does item 184.75. Plaintiff calls attention to the fact that item 184.75 contains a "not specially provided for" clause.

Defendant contends that item 184.47 is an *eo nomine* provision which is expressly limited to screenings which are ground or not ground. Defendant argues that pelleted screenings are different from ground or unground screenings since pelleting requires substantial additional processing of the screenings.

In *American Customs Brokerage Co., Inc. a/c Albers Milling Co. v. United States*, 76 Cust. Ct. 146, C.D. 4649 (1976), merchandise likewise described as "grain screening pellets" and also exported from

Canada was held properly classified under item 184.75 as animal feeds, and ingredients therefor, not specially provided for, other, as against the importer's claim for classification of the merchandise under item 184.70 as an animal feed byproduct obtained from the milling of grains, mixed feed and mixed-feed ingredients. However, item 184.47 was not involved in the case, and the case turned on the failure of proof necessary to support classification under item 184.70. The case does, however, underscore the fact that as to grain screenings pellets which come from the same source as those at bar, namely, Pacific Elevators in British Columbia, the lignosite ingredient is present only as a *binder*.

There is no question but that the provision for "screenings" is an *eo nomine* provision. *Universal Laboratories* v. *United States*, 35 Cust. Ct. 23, C.D. 1715 (1955). The question as to whether or not the qualifying phrase "ground or not ground" appearing at the end of the articles enumerated in item 184.47 is to be read as a *limitation* as contended for by defendant is a *question of law*.

All that can be learned from the record as to the purpose of *grinding* may by summed up in the direct testimony of Gary DeWar, director of the terminal facilities for Alberta Wheat Pool, Pacific Elevators, and Prince Rupert in the western part of British Columbia. The witness testified (R. 22):

> Q. What was the purpose of grinding the refuse screenings?—A. To blend the commodity plus the initial stage of the degermination of the weed seeds.
>
> Q. Why doesn't the grinding destroy the weed seeds?—A. It doesn't totally destroy them. I don't know why. We found in the Canadian system that we require not only the heat but the pressure to totally degerminate weed seeds.

Thus, according to the witness, *grinding* is used to partially degerminate the weed seeds from the screenings. Presumably then, if another system were to become available to accomplish *en toto* that which *grinding* can only accomplish *pro tanto*, namely total degermination of weed seeds, it is conceivable that *grinding* might well be eliminated as a step in the production of pellets. In other words, *grinding* may or may not take place. And if the descriptive term "ground or not ground" in item 184.47 is read in this light, it would appear to be a term of *extension* rather than one of *limitation*—a description of a process which may or may not take place in the production of screenings pellets.

Legislative history discloses that this language was first introduced into paragraph 731 of the Tariff Act of 1922 which read:

> Screenings, scalpings, chaff, or scourings of wheat, flaxseed, or other grains or seeds: Unground, or ground, 10 per centum ad valorem: *Provided*, That when grains or seeds contain more than 5 per centum of any one foreign matter duitiable at a rate

> higher than that applicable to the grain or seed the entire lot shall be dutiable at such higher rate.

The Tariff Commission reports that when the provision was introduced in H.R. 7456, it was proposed to make the *unground* articles dutiable at the rate of 75 cents per ton, and the *ground* articles dutiable at the rate of $1.50 per ton. [Summary of Tariff Information, 1921, p. 705] The Commission made the following suggestion to the Senate Finance Committee:

> *Suggested changes.*—Was it the intention in fixing the rate on screenings, etc., to make the rate higher on unground than on ground in order to discourage the importation of injurious weed seeds? If so, should not the rates be reversed? [Id., p. 706]

By adopting the language of paragraph 731 as set out above, Congress appears to have eliminated any differentiation between unground and ground screenings, and provided for uniform treatment in the dutiable status of both classes of articles. The same holds true for paragraph 731 of the Tariff Act of 1930 and item 184.47, the successor provisions to paragraph 731 of the 1922 act.

The word "unground" standing by itself would seem to imply a *restriction*, as also would the word "ground" standing by itself. But when both terms are grouped together in the same descriptive phrase, i.e., "ground or not ground", they tend to cancel out each other as having a *restrictive* significance. The same would apply to the terms "full or empty" when written in a tariff provision with reference to the condition of a container such as a drum. *Cf. Thos. Cook & Son-Wagons-Lits, Inc.* v. *United States*, 31 CCPA 32, 35, C.A.D. 245 (1943).

In the light of the meager legislative history of the phrase "ground or not ground" the court is inclined to the view that if Congress had intended the phrase to be one of *limitation*, it would have chosen more forceful words to express that intent such as "not further processed than grinding" in the manner and style with which it chose the wording in paragraph 732 [cereal foods and preparations] of the 1922 act and qualified that language with the phrase "processed further than milling". *Cf. Atkins, Kroll & Co.* v. *United States*, 47 Cust. Ct. 96, 100, C.D. 2286 (1961), *aff'd.*, 50 CCPA 62, C.A.D. 821 (1963). But as the phrase now stands, the court believes that it is merely descriptive of a process to which screenings may or may not have been subjected, Congress having been made aware of the fact that these new articles of trade were the product of various stages of *separation*, among other things. [Summary of Tariff Information, 1921, p. 706] And it must be emphasized that contrary to defendant's assertion, *grinding* does not indentify *forms* of screenings [defendant's brief, page 6] but rather identifies *advancement in condition* of the screen-

ings. See *U.S. Vitamin Corporation* v. *United States*, 33 Cust. Ct. 269, 275, C.D. 1664 (1954), *aff'd.*, 43 CCPA 44, C.A.D. 607 (1956).

Since it is conceded that pelletizing creates a *form* of screenings, it follows that the subject merchandise is within the well-settled rule that an *eo nomine* provision covers all *forms* of an article. *Nootka Packing Co. et al.* v. *United States*, 22 CCPA 464, T.D. 47464 (1935). This being so, it is clear that the imported grain screenings pellets come within the purview of the *eo nomine* provision for screenings in item 184.47. And, as between item 184.47 and item 184.75 which is a residual use provision, item 184.47 more specifically describes the imported merchandise. *United States* v. *Lansen Naeve Corp.*, 44 CCPA 31, C.A.D. 632 (1957).

The court, therefore, agrees with plaintiff, and finds that plaintiff's claim for classification of the screenings under item 184.47 is well founded and must be sustained. Judgment will be entered herein accordingly.

ERRATUM

In CUSTOMS BULLETIN, Vol. 15, No. 45, dated November 11, 1981, page 55 Slip-Op. 81–91, should read Slip-Op. 81–92.

Decisions of the United States Court of International Trade

Abstracts

Abstracted Reappraisement Decisions

DEPARTMENT OF THE TREASURY, *November 16, 1981.*

The following abstracts of decisions of the United States Court of International Trade at New York are published for the information and guidance of officers of the customs and others concerned. Although the decisions are not of sufficient general interest to print in full, the summary herein given will be of assistance to customs officials in easily locating cases and tracing important facts.

WILLIAM VON RAAB,
Commissioner of Customs.

DECISION NUMBER	JUDGE & DATE OF DECISION	PLAINTIFF	COURT NO.	BASIS OF VALUATION	HELD VALUE	BASIS	PORT OF ENTRY AND MERCHANDISE
R81/393	Rao, J. November 10, 1981	Kayten Trading Corp.	R65/7014, etc.	Export value	F.o.b. unit invoice prices plus 20% of difference between f.o.b. unit invoice prices and appraised values	Agreed statement of facts	New Bedford (Boston) Table cutlery and stainless steel flatware
R81/394	Rao, J. November 10, 1981	Mitsui & Co. Ltd.	R62/11217, etc.	Export value	F.o.b. unit invoice prices plus 20% of difference between f.o.b. unit invoice prices and appraised values	Agreed statement of facts	New York Sewing machine heads
R81/395	Rao, J. November 10, 1981	Mitsui & Co. Ltd.	R63/903, etc.	Export value	F.o.b. unit invoice prices plus 20% of difference between f.o.b. unit invoice prices and appraised values	Agreed statement of facts	Los Angeles Sewing machine heads
R81/396	Rao, J. November 10, 1981	National Silver Co. et al.	R61/5201, etc.	Export value	F.o.b. unit invoice prices plus 20% of difference between f.o.b. unit invoice prices and appraised values	Agreed statement of facts	New York Table cutlery, chrome flatware, stainless steel flatware, etc.

R81/397	Rao, J. November 10, 1981	National Silver Co.	R65/7001, etc.	Export value	F.o.b. unit invoice prices plus 20% of difference between f.o.b. unit invoice prices and appraised values	Agreed statement of facts	New Bedford (Boston) Stainless steel flatware
R81/398	Rao, J. November 10, 1981	National Silver Co. et al.	R65/8351, etc.	Export value	F.o.b. unit invoice prices plus 20% of difference between f.o.b. unit invoice prices and appraised values	Agreed statement of facts	New York Stainless steel flatware
R81/399	Rao, J. November 10, 1981	National Silver Co.	R66/6349, etc.	Export value	F.o.b. unit invoice prices plus 20% of difference between f.o.b. unit invoice prices and appraised values	Agreed statement of facts	New Bedford (Boston) Table cutlery and stainless steel flatware
R81/400	Rao, J. November 10, 1981	National Silver Co.	R66/19676, etc.	Export value	F.o.b. unit invoice prices plus 20% of difference between f.o.b. unit invoice prices and appraised values	Agreed statement of facts	New Bedford (Boston) Table cutlery and stainless steel flatware
R81/401	Rao, J. November 10, 1981	National Silver Co. et al.	R68/14440, etc.	Export value	F.o.b. unit invoice prices plus 20% of difference between f.o.b. unit invoice prices and appraised values	Agreed statement of facts	Boston Stainless steel flatware
R81/402	Rao, J. November 12, 1981	National Silver Co.	R69/2937, etc.	Export value	F.o.b. unit invoice prices plus 20% of difference between f.o.b. unit invoice prices and appraised values	Agreed statement of facts	Boston Stainless steel flatware

DECISION NUMBER	JUDGE & DATE OF DECISION	PLAINTIFF	COURT NO.	BASIS OF VALUATION	HELD VALUE	BASIS	PORT OF ENTRY AND MERCHANDISE
R81/403	Rao, J. November 12, 1981	Nichimen Co., Inc.	R62/10007, etc.	Export value	F.o.b. unit invoice prices plus 20% of difference between f.o.b. unit invoice prices and appraised values	Agreed statement of facts	New York Sewing machine heads
R81/404	Rao, J. November 12, 1981	Nichimen Co., Inc.	R63/53 8, etc.	Export value	F.o.b. unit invoice prices plus 20% of difference between f.o.b. unit invoice prices and appraised values.	Agreed statement of facts	Portland, Oreg. Sewing machine heads
R81/405	Rao, J. November 12, 1981	Nichimen Co., Inc.	R64/2808	Export value	F.o.b. unit invoice prices plus 20% of difference between f.o.b. unit invoice prices and appraised values	Agreed statement of facts	Honolulu Sewing machine heads
R81/406	Rao, J. November 12, 1981	Nichimen Co.	R64/2847	Export value	F.o.b. unit invoice prices plus 20% of difference between f.o.b. unit invoice prices and appraised values	Agreed statement of facts	New Orleans Sewing machine heads

Decision on Petition for Rehearing Before the U.S. Court of Customs and Patent Appeals

November 5, 1981

APPEAL 81-3.—UNITED STATES v. ARNOLD PICKLE & OLIVE CO.—CUCUMBERS IN BRINE—PACKING COSTS—EXPORT VALUE.—C.D. 4868 Reversed September 17, 1981 (C.A.D. 1270). Petition for Rehearing Filed by Appellee on October 7, 1981, Denied.

International Trade Commission Notices

Investigations by the U.S. International Trade Commission

DEPARTMENT OF THE TREASURY, NOVEMBER 25, 1981.

The appended notices relating to investigations by the U.S. International Trade Commission are published for the information of Customs officers and others concerned.

WILLIAM VON RAAB,
Commissioner of Customs.

(19 CFR 207.40)

Notice of Request for Public Comment on Termination of Countervailing Duty Investigation Concerning Refrigerators, Freezers, Other Refrigerating Equipment and Parts From Italy

AGENCY: U.S. International Trade Commission.

ACTION: Request for comments on proposed termination of countervailing duty investigation under section 104(b) of the Trade Agreements Act of 1979.

FOR FURTHER INFORMATION CONTACT: Mr. Larry Reavis, Office of Investigations, telephone 202-523-0296.

SUPPLEMENTARY INFORMATION: The Trade Agreements Act of 1979, subsection 104(b)(1), requires the Commission in the case of a countervailing duty order issued under section 303 of the Tariff Act of 1930, upon the request of a government or group of exporters of merchandise covered by the order, to conduct an investigation to determine whether an industry in the United States would be materially injured, or threatened with material injury, or whether the establishment of such industry would be materially retarded, if the order were to be revoked. On March 28, 1980, the Commission received a request from the Delegation of the Commission of the European Communities for the review of the countervailing duty order on refrigerators, freezers, other refrigerating equipment

and parts from Italy (T.D. 75-85), notice of which was published on March 28, 1973, in the Federal Register (38 FR 8057).

The Commission received a letter on October 26, 1981, from White Consolidated Industries, Inc., the original petitioner for the countervailing duty order, stating that it withdraws its request for the imposition of countervailing duties under the above-referenced countervailing duty order.

The legislative history of section 704(a) of the Tariff Act of 1930, as amended by the Trade Agreements Act, indicates that the Commission should solicit public comment prior to termination of an investigation and approve the termination only if it is in the public interest. In light of the Commission's duty to consider the public interest, the Commission requests written comments from persons concerning the proposed termination of the investigation on refrigerators, freezers, other refrigerating equipment and parts from Italy. These written comments must be filed with the Secretary to the Commission no later than 30 days after publication of this notice in the Federal Register.

By order of the Commission.

Issued: November 17, 1981.

KENNETH R. MASON,
Secretary.

731-TA-38 (Final)

Truck Trailer Axle-and-Brake Assemblies and Parts Thereof From Hungary

CANCELLATION OF HEARING

AGENCY: United States International Trade Commission.

ACTION: Cancellation of hearing.

SUMMARY: On November 12, 1981, the United States Department of Commerce notified the Commission that pursuant to the provisions of section 734 of the Tariff Act of 1930 (19 U.S.C. 1673c), that Commerce and the Hungarian Railway Carriage and Machine Works by their counsel, accepted a proposed agreement on the basis of which Commerce proposes to suspend its investigation concerning less-than-fair-value sales of truck trailer axle-and-brake assemblies, and parts thereof, provided for in items 692.32 and 692.60 of the Tariff Schedules of the United States (TSUS).

Accordingly, the Commission hereby gives notice of the cancellation of its hearing, originally scheduled for December 9, 1981, in connection with investigation No. 731-TA-38 (Final) to determine whether an

industry in the United States is materially injured or is threatened with material injury, or the establishment of an industry in the United States is materially retarded, by reason of imports of such merchandise.

FOR FURTHER INFORMATION CONTACT: Ms. Abigail Eltzroth, Office of Investigations, U.S. International Trade Commission, Room 337, 701 E Street, NW., Washington, D.C. 20436; telephone (202) 523-0289.

SUPPLEMENTARY INFORMATION: Until further notice, the Commission, in connection with investigation No. 731-TA-38 (Final), hereby cancels: the date for making the staff report available to the public, originally scheduled for November 19, 1981; the date for filing requests to appear at the hearing, originally scheduled for December 1, 1981; the prehearing conference, originally scheduled for December 2, 1981; the date for filing prehearing briefs, originally scheduled for December 4, 1981; the hearing, originally scheduled for December 9, 1981; and the date for submission of written statements, originally scheduled for December 16, 1981.

This notice is published pursuant to section 207.20 of the Commission's Rules of Practice and Procedure (19 CFR 207.20).

By order of the Commission.

Issued: November 16, 1981.

KENNETH R. MASON,
Secretary.

Drycleaning Machinery From West Germany

REQUEST FOR COMMENTS CONCERNING INSTITUTION OF SECTION 751(b) REVIEW INVESTIGATION

AGENCY: International Trade Commission.

ACTION: Request for comments regarding institution of section 751(b) review investigation concerning affirmative determination in Investigation No. AA1921-99, Drycleaning Machinery from West Germany.

SUMMARY: The Commission invites comments from the public on whether changed circumstances exist which warrant the institution of an investigation pursuant to section 751(b) of the Tariff Act of 1930 (19 U.S.C. 1675(b)), to review the Commission's affirmative determination in investigation No. AA1921-99 regarding drycleaning machinery from West Germany. The purpose of the proposed section 751(b) review investigation, if instituted, would be to determine whether an industry in the United States would be materially injured, would be

threatened with material injury, or the establishment of an industry would be materially retarded, by reason of imports of drycleaning machinery from West Germany if the antidumping order is modified or revoked with respect to such merchandise provided for in item 670.41 of the Tariff Schedules of the United States.

SUPPLEMENTARY INFORMATION: On September 29, 1972, the Commission determined that an industry in the United States was injured within the meaning of the Antidumping Act 1921, by reason of imports of drycleaning machinery from West Germany determined by the Secretary of Treasury to be sold or likely to be sold at less than fair value (LTFV).

On November 8, 1972, the Department of the Treasury issued a finding of dumping (T.D. 72–311) and published notice of the dumping finding in the Federal Register (37 FR 23715).

On October 28, 1981, the Commission received a request to review its affirmative determination in investigation No. AA1921–99. The request was filed pursuant to section 751(b) of the Tariff Act of 1930 by Barnes, Richardson, & Colburn on behalf of Boewe Machinenfabrik, GmbH, a West German exporter of drycleaning machinery, and American Permac Inc., a related U.S. importer of such merchandise.

WRITTEN COMMENTS REQUESTED: Pursuant to § 207.45(b)(2) of the Commission's Rules of Practice and Procedure (46 FR 18023), the Commission requests comments on whether the following alleged changed circumstances are sufficient to warrant institution of a review investigation: (1) domestic consumption of drycleaning machines has been increasing steadily during the past five years, (2) sales of machines with larger capacity, new technology, and more environmentally safe features used almost exclusively by professional drycleaners have increased, while sales of smaller coin-operated machines have declined markedly, and (3) imports of drycleaning machines from West Germany have declined from 15 percent of U.S. consumption in 1977 to 10 percent in 1981.

THE REQUEST FOR REVIEW OF THE INJURY DETERMINATION: Copies of the request for review of the injury determination and any other public documents in this matter are available to the public during official working hours (8:45 a.m. to 5:15 p.m.) in the Office of the Secretary, U.S. International Trade Commission, 701 E Street NW., Washington, D.C. 20436; telephone 202–523–0161.

ADDITIONAL INFORMATION: Under §201.8 of the Commission's Rules of Practice and Procedure (19 CFR 201.8), the signed original and 19 true copies of all written submissions must be filed with the Secretary to the Commission, 701 E Street NW., Washington, D.C.

20436. All comments must be filed no later than December 28, 1981. Any person desiring to submit a document (or portion thereof) to the Commission in confidence must request business confidential treatment under § 201.6 of the Commission's Rules of Practice and Procedure (19 CFR 201.6). Such request should be directed to the Secretary to the Commission and must include a full statement of the reasons why the Commission should grant such treatment. Each sheet must be clearly marked at the top "Confidential Business Data." The Commission will either accept the submission in confidence or return it. All nonconfidential written submissions will be available for public inspection in the Office of the Secretary.

FOR FURTHER INFORMATION CONTACT: Abigail Eltzroth, Office of Investigations, U.S. International Trade Commission (202–523–0289).

By order of the Commission.

Issued: November 19, 1981.

KENNETH R. MASON,
Secretary.

In the Matter of CERTAIN LARGE VIDEO MATRIX DISPLAY SYSTEMS AND COMPONENTS THEREOF	Investigation No. 337–TA–75

Notice of Denial of Motion To Reopen Investigation

AGENCY: U.S. International Trade Commission.

ACTION: Denial of motion to reopen investigation.

SUMMARY: The Commission has voted unanimously to deny respondent's motion to reopen the record of the investigation to receive newly discovered evidence.

SUPPLEMENTARY INFORMATION: On June 19, 1981, the Commission ordered that large video matrix display systems and components thereof, including spare parts, that infringe claims of U.S. Letters Patent Nos. 3,594,762, 3,941,926, or 4,009,335 and are manufactured by SSIH Equipment S.A., of Bienne, Switzerland, or any of its affiliated companies, parents, subsidiaries, or other related business entities, or their successors or assigns, be excluded from entry into the United States for the remaining terms of said patents, except under license. 46 FR 32694 (June 24, 1981). On July 16 and 17, 1981, the United States District Court for the Eastern District of Michigan held invalid U.S. Letters Patent Nos. 3,941,926

and 4,009,335 in the course of a patent infringement suit. On August 10, 1981, the Commission, on its own motion, modified its exclusion order to suspend that portion of the order relating to the '926 and '335 patents, pending resolution of the validity of those patents on appeal. 46 FR 42217 (Aug. 19, 1981). The modified order became final on August 19, 1981. Respondent SSIH Equipment S.A. has asked the Commission to reopen the investigation to consider newly discovered evidence. Motion No. 75–33 (July 29, 1981). The Commission voted unanimously to deny the motion on November 12, 1981.

Copies of the Commission's Action and Order, Opinion, and all other nonconfidential documents in the record of this investigation are available for inspection during official business hours (8:45 a.m. to 5:15 p.m.) in the Office of the Secretary, U.S. International Trade Commission, 701 E Street NW., Washington, D.C. 20436, telephone 202–523–0161.

FOR FURTHER INFORMATION CONTACT: Michael B. Jennison, Esq., Office of the General Counsel, U.S. International Trade Commission, telephone 202–523–0350.

By order of the Commission.

Issued: November 19, 1981.

KENNETH R. MASON,
Secretary.

Investigations Nos. 701–TA–83 and 84 (Preliminary)

HOT-ROLLED CARBON STEEL PLATE FROM BELGIUM AND BRAZIL

AGENCY: United States International Trade Commission.

ACTION: Institution of two preliminary countervailing duty investigations and scheduling of a conference to be held in connection with the investigations.

SUMMARY: The U.S. International Trade Commission hereby gives notice of the institution of investigations Nos. 701–TA–83 (Preliminary) and 701–TA–84 (Preliminary) to determine, pursuant to section 703(a) of the Tariff Act of 1930 (19 U.S.C. § 1671b(a)), whether there is a reasonable indication that an industry in the United States is materially injured, or is threatened with material injury, or the establishment of an industry in the United States is materially retarded, by reason of imports from Belgium and Brazil of hot-rolled carbon steel plate, provided for in item 607.6615 of the Tariff Schedules of the United States Annotated (1981), upon which bounties or grants are alleged to be paid.

EFFECTIVE DATE: November 18, 1981.

FOR FURTHER INFORMATION CONTACT: Mr. Lynn Featherstone, Office of Investigations, U.S. International Trade Commission; telephone 202-523-0242.

SUPPLEMENTARY INFORMATION:

Background.—These investigations are being instituted following receipt of advice from the U.S. Department of Commerce on November 18, 1981, that it was initiating countervailing duty investigations on hot-rolled carbon steel plate from Belgium ann Brazil pursuant to section 702(a) of the Tariff Act of 1930 (19 U.S.C. § 1671a(a)). The Commission must make its determination in these investigations within 45 days after the date of notification from Commerce, or by January 4, 1982 (19 CFR § 207.17). The investigations will be subject to the provisions of part 207 of the Commission's Rules of Practice and Procedure (19 CFR § 207, 44 FR 76457), and particularly subpart B thereof.

Written submissions.—Any person may submit to the Commission on or before December 16, 1981, a written statement of information pertinent to the subject matter of the investigations. Assigned original and nineteen copies of such statements must be submitted.

Any business information which a submitter desires the Commission to treat as confidential shall be submitted separately, and each sheet must be clearly marked at the top "Confidential Business Data." Confidential submissions must conform with the requirements of section 201.6 of the Commission's Rules of Practice and Procedure (19 CFR § 201.6). All written submissions, except for confidential business data, will be available for public inspection.

Conference.—The Director of Operations of the Commission has scheduled a conference in connection with the investigations for 9:30 a.m., e.s.t., on December 14, 1981, at the U.S. International Trade Commission Building, 701 E Street, NW., Washington, D.C. Parties wishing to participate in the conference should contact the supervisory investigator for the investigation, Mr. Lynn Featherstone, telephone 202-523-0242, not later than December 7, 1981, to arrange for their appearance. The conference in these investigations will be held concurrently with that for investigations Nos. 731-TA-51 (Preliminary), hot-rolled carbon steel plate from Romania. and 701-TA-85 (Preliminary), hot-rolled carbon steel sheet from France. Parties in support of the imposition of antidumping or countervailing duties in these cases will be collectively allocated two hours within which to make an oral presentation at the conference. Parties in opposition to the imposition of such duties will also be collectively allocated two hours,

with one-half hour each for representatives of Romania, Belgium, Brazil, and France.

For further information concerning the conduct of the investigations and rules of general application, consult the Commission's Rules of Practice and Procedure, part 207, subparts A and B (19 CFR §207), and part 201, subparts A through E (19 CFR §201). Further information concerning the conduct of the conference will be provided by Mr. Featherstone.

This notice is published pursuant to section 207.12 of the Commission's Rules of Practice and Procedure (19 CFR § 207.12).

By order of the Commission.

Issued: November 19, 1981.

KENNETH R. MASON,
Secretary.

In the Matter of
CERTAIN STEEL ROD TREATING APPARATUS AND COMPONENTS THEREOF } Investigation No. 337-TA-97

Notice of Sanctions and of Disposition of Certain Procedural Matters

AGENCY: U.S. International Trade Commission.

ACTION: Notice of imposition of sanctions and of disposition of certain procedural matters.

SUPPLEMENTARY INFORMATION: Pursuant to section 337 of the Tariff Act of 1930, 19 U.S.C. § 1337, the Commission is currently conducting an investigation of alleged unfair acts and unfair methods of competition in connection with the importation or sale of certain steel rod treating apparatus and components thereof.

Notice of the institution of this investigation was published in the Federal Register of January 28, 1981 (46 FR 9263).

The Commission conducted a hearing on violation and on remedy, bonding and the public interest on October 14, 1981.

Prior to oral argument on violation, the Commission disposed of certain procedural matters then pending before the Commission. The matters pending were the following:

(1) Motion No. 97-57c—Complainant's motion to declassify documents for the purpose of effective oral presentation. Filed October 2, 1981. Response filed October 7, 1981.

(2) Respondents' submission concerning the allegedly inconsistent testimony of one of complainant's witnesses in court proceedings in New York. Filed October 7, 1981. The alleged inconsistent statement was submitted for inclusion in the evidentiary record.

(3) Motion No. 97-59—Respondents' motion for sanctions against complainant for withholding documents. Filed October 7, 1981. Response filed October 9, 1981.

(4) Motion No. 97-60—Complainant's motion to allow Mr. Paul Morgan to appear as a witness in the public-interest phase of the hearing. Filed October 8, 1981.

The matters were disposed of as follows:

(1) Motion No. 97-57c was denied. The Commission indicated that it was prepared to conduct a portion of the hearing *in camera* in order to hear argument regarding the documents in question.

(2) Respondents' submission of the allegedly prior inconsistent statement of one of complainant's witnesses was denied as untimely filed and was not received into evidence.

(3) The Commission requested oral argument from counsel regarding Motion No. 97-59, with a written ruling to follow after the hearing.

(4) Motion No. 97-60 to allow Mr. Paul Morgan to appear as a witness in the public-interest phase of the hearing was granted.

Following the hearing, both complainant Morgan and respondents Ashlow Ltd., Ashlow Corp., Korf Industries, Inc., and Georgetown Steel Corp. filed submissions regarding Motion No. 97-59.

The Commission has granted Motion No. 97-59 and has imposed certain limited evidentiary sanctions against complainant by entering certain adverse findings of fact and by admitting certain documents into evidence.

FOR FURTHER INFORMATION CONTACT: Warren H. Maruyama, Esq., Office of the General Counsel, U.S. International Trade Commission, 701 E Street NW., Washington, D.C. 20436; telephone 523-0375.

By order of the Commission.

Issued: November 19, 1981.

KENNETH R. MASON.
Secretary.

Investigation No. 701-TA-85 (Preliminary)

HOT-ROLLED CARBON STEEL SHEET FROM FRANCE

AGENCY: United States International Trade Commission.

ACTION: Institution of a preliminary countervailing duty investigation and scheduling of a conference to be held in connection with the investigation.

SUMMARY: The U.S. International Trade Commission hereby gives notice of the institution of investigation No. 701-TA-85 (Pre-

liminary) to determine, pursuant to section 703(a) of the Tariff Act of 1930 (19 U.S.C. § 1671b(a)), whether there is a reasonable indication that an industry in the United States is materially injured, or is threatened with material injury, or the establishment of an industry in the United States is materially retarded, by reason of imports from France of hot-rolled carbon steel sheet upon which bounties or grants are alleged to be paid. For purposes of this investigation, hot-rolled carbon steel sheets is defined as hot-rolled sheets and plates, of other than alloy iron or steel, whether or not corrugated or crimped and whether or not pickled; not cold rolled; not cut, not pressed, and not stamped to nonrectanglular shape; not coated or plated with metal and not clad; over 12 inches in width and in coils or if not in coils under 0.1875 inch in thickness; as provided for in items 607.6610, 607.6700, 607.8320, or 607.8342 of the Tariff Schedules of the United States Annotated (1981).

EFFECTIVE DATE: November 18, 1981.

FOR FURTHER INFORMATION CONTACT: Mr. Lynn Featherstone, Office of Investigations, U.S. International Trade Commission; telephone 202–523–0242.

SUPPLEMENTARY INFORMATION:

Background.—This investigation is being instituted following receipt of advice from the U.S. Department of Commerce on November 18, 1981, that it was initiating a countervailing duty investigation on hot-rolled carbon steel sheet from France pursuant to section 702(a) of the Tariff Act of 1930 (19 U.S.C. § 1671a(a)). The Commission must make its determination in this investigation within 45 days after the date of notification from Commerce, or by January 4, 1982 (19 CFR § 207.17). The investigation will be subject to the provisions of part 207 of the Commission's Rules of Practice and Procedure (19 CFR § 207, 44 FR 76457), and particularly subpart B thereof.

Written submissions.—Any person may submit to the Commission on or before December 16, 1981, a written statement of information pertinent to the subject matter of the investigation. A signed original and nineteen copies of such statements must be submitted.

Any business information which a submitter desires the Commission to treat as confidential shall be submitted separately, and each sheet must be clearly marked at the top "Confidential Business Data". Confidential submission must conform with the requirements of section 201.6 of the Commission's Rules of Practice and Procedure (19 CFR § 201.6). All written submissions, except for confidential business data, will be available for public inspection.

Conference.—The Director of Operations of the Commission has

scheduled a conference in connection with this investigation for 9:30 a.m., e.s.t., or December 14, 1981, at the U.S. International Trade Commission Building, 701 E Street, NW., Washington, D.C. Parties wishing to participate in the conference should contact the supervisory investigator for the investigation, Mr. Lynn Featherstone, telephone 202–523–0242, not later than December 7, 1981, to arrange for their appearance. The conference in this investigation will be held concurrently with that for investigations Nos. 731–TA–51 (Preliminary), hot-rolled carbon steel plate from Romania, and 701–TA–83 and 84 (Preliminary), hot-rolled carbon steel plate from Belgium and Brazil. Parties in support of the imposition of antidumping or countervailing duties in these cases will be collectively allocated two hours within which to make an oral presentation at the conference. Parties in opposition to the imposition of such duties will also be collectively allocated two hours, with one-half hour each for representatives of Romania, Belgium, Brazil, and France.

For further information concerning the conduct of the investigations and rules of general application, consult the Commission's Rules of Practice and Procedure, part 207, subparts A and B (19 CFR § 207), and part 201, subparts A through E (19 CFR § 201). Further information concerning the conduct of the conference will be provided by Mr. Featherstone.

This notice is published pursuant to section 207.12 of the Commission's Rules of Practice and Procedure (19 CFR § 207.12).

By order of the Commission.

Issued: November 19, 1981.

KENNETH R. MASON,
Secretary.

Investigation No. 731–TA–51 (Preliminary)

HOT-ROLLED CARBON STEEL PLATE FROM ROMANIA

AGENCY: United States International Trade Commission.

ACTION: Institution of a preliminary antidumping investigation and scheduling of a conference to be held in connection with the investigation.

SUMMARY: The U.S. International Trade Commission hereby gives notice of the instruction of investigation No. 731–TA–51 (Preliminary) to determine, pursuant to section 733(a) of the Tariff Act of 1990 (19 U.S.C. § 1673b(a), whether there is a reasonable indication that an industry in the United States is materially injured, or is threatened with material injury, or the establishment of an industry

in the United States is materially retarded, by reason of imports from Romania of hot-rolled carbon steel plate, provided for in item 607.6615 of the Tariff Schedules of the United States Annotated (1981), which are possibly sold in the United States at less than fair value.

EFFECTIVE DATE: November 18, 1981.

FOR FURTHER INFORMATION CONTACT: Mr. Lynn Featherstone, Office of Investigations, U.S. International Trade Commission; telephone 202-523-0242.

SUPPLEMENTARY INFORMATION:

Background.—This investigation is being instituted following receipt of advice from the U.S. Department of Commerce on November 18, 1981, that it was initiating an antidumping investigation on hot-rolled carbon steel plate from Romania pursuant to section 732(a) of the Tariff Act of 1930 (19 U.S.C. §1673a(a)). After monitoring imports of certain steel products under the Trigger Price Mechanism, Commerce found significant sales of hot-rolled carbon steel plate from Romania being made at less than the relevant trigger price. These sales constitute possible sales at less than fair value. The Commission must make its determination in the investigation within 45 days after the date of notification from Commerce, or by January 4, 1982 (19 CFR § 207.17). The investigation will be subject to the provisions of part 207 of the Commission's Rules of Practice and Procedure (19 CFR § 207, 44 FR 76457, and particularly subpart B thereof.

Written submissions.—Any person may submit to the Commission on or before December 16, 1981, a written statement of information pertinent to the subject matter of this investigation. A signed original and nineteen copies of such statements must be submitted.

Any business information which a submitter desires the Commission to treat as confidential shall be submitted separately, and each sheet must be clearly marked at the top "Confidential Business Data." Confidential submissions must conform jwith the requirements of section 201.6 of the Commission's Rules of Practice and Procedure (19 CFR § 201.6). All written submissions, except for confidential business data, will be available for public inspection.

Conference.—The Director of Operations of the Commission has scheduled a conference in connection with this investigation for 9:30 a.m., e.s.t., on December 14, 1981, at the U.S. International Trade Commission Building, 701 E Street, NW., Washington, D.C. Parties wishing to participate in the conference should contact the supervisory investigator for the investigation, Mr. Lynn Featherstone, telephone 202-523-0242, not later than December 7, 1981, to arrange for their appearance. The conference in this investigation will be

held concurrently with that for investigations Nos. 701–TA–83 and 84 (Preliminary), hot-rolled carbon steel plate from Belgium and Brazil, and 701–TA–85 (Preliminary), hot-rolled carbon steel sheet from France. Parties in support of the imposition of antidumping or countervailing duties in these cases will be collectively allocated two hours within which to make an oral presentation at the conference. Parties in opposition to the imposition of such duties will also be collectively allocated two hours, with one-half hour each for representatives of Romania, Belgium, Brazil, and France.

For further information concerning the conduct of the investigation and rules of general application, consult the Commission's Rules of Practice and Procedure, part 207, subparts A and B (19 CFR § 207), and part 201, subparts A through E (19 CFR § 201). Further information concerning the conduct of the conference will be provided by Mr. Featherstone.

This notice is published pursuant to section 207.12 of the Commission's Rules of Practice and Procedure (19 CFR § 207.12).

By order of the Commission.

Issue: November 19, 1981.

KENNETH R. MASON,
Secretary.

In the Matter of CERTAIN WHEEL LOCKS AND COMPONENTS THEREOF	Investigation No. 337–TA–102

Notice of Termination of Investigation

AGENCY: U.S. International Trade Commission.

ACTION: Termination of investigation based on settlement agreement.

SUMMARY: Having reviewed the record in this investigation, including the presiding officer's recommendation, the Commission has voted to grant the parties' joint motion to terminate (motion 102–4) and is ordering the termination of investigation No. 337–TA–102, Certain Wheel Locks and Components Thereof. The motion was joined by all parties to the investigation.

PETITIONS FOR RECONSIDERATION: Any party wishing to petition for reconsideration of the Commission's action must do so within 14 days of service of the Commission order. Such petitions must be in accord with section 210.57 of the Commission's rules (46 FR 17528 (March 18, 1981), to be codified at 19 CFR § 210.57).

SUPPLEMENTARY INFORMATION: On May 28, 1981, the Commission published notice of the institution of an investigation, pursuant to section 337 of the Tariff Act of 1930 (19 U.S.C. § 1337), of alleged unfair methods of competition and unfair acts in the importation and sale of certain wheel locks and components thereof (46 F.R. 28770). On August 7, 1981, complainant McGard, Inc., respondents Kyo-Ei Industrial Corp., Mackin Industries, Superior Industries International, Inc., and Custom Plating Corp., and the Commission investigative attorney jointly moved to terminate the investigation on the basis of a settlement agreement entered into by complainant, respondents and one nonparty, Kyo-Ei America Corp. The presiding officer recommended that the Commission grant the motion.

The Commission published notice of the proposed settlement agreement on September 16, 1981 (46 FR 46023), and requested comments from the public. No comments adverse to termination were received.

Copies of the Commission's Action and Order and any other public documents on the record of this investigation are available for inspection during official working hours (8:45 a.m. to 5:15 p.m.) in the Office of the Secretary, U.S. International Trade Commission, 701 E Street NW., Washington, D.C. 20436; telephone 202–523–0161. The complete text of the settlement agreement, except for confidential business information contained therein, is also available for public examination.

FOR FURTHER INFORMATION CONTACT: Michael P. Mabile, Esq., Office of the General Counsel, U.S. International Trade Commission, 701 E Street NW., Washington, D.C. 20436; telephone 202–523–1626.

By order of the Commission.

Issued: November 18, 1981.

KENNETH R. MASON,
Secretary.

Investigation No. 701–TA–82 (Preliminary)

HARD-SMOKED HERRING FILETS FROM CANADA

Notice of Institution of Preliminary Countervailing Duty Investigation and Scheduling of Conference

AGENCY: United States International Trade Commission.

ACTION: Institution of preliminary countervailing duty investigation to determine whether there is a reasonable indication that an in-

dustry in the United States is materially injured, or is threatened with material injury, or the establishment of an industry is materially retarded, by reason of allegedly subsidized imports from Canada of hard-smoked herring filets, classified under item 111.80 of the Tariff Schedules of the United States.

EFFECTIVE DATE: November 17, 1981.

FOR FURTHER INFORMATION CONTACT: John MacHatton, Supervisory Investigator (202–523–0439).

SUPPLEMENTARY INFORMATION:

Background. This investigation is being instituted following receipt of a revised petition on November 2, 1981, from the McCurdy Fish Co., Lubec, Maine. Originally filed on September 30, 1981, McCurdy's petition was found by Commerce to have insufficient data in support of its subsidy allegations, and on October 22, 1981, the company withdrew its complaint to acquire additional information. Accordingly the U.S. International Trade Commission terminated its investigation (No. 701–TA–81 (Preliminary)) pending the petitioner's resubmission. Notice of the termination of investigation No. 701–TA–81 (Preliminary) and the cancellation of the public conference therefor was published in the Federal Register of October 29, 1981 (46 FR 53544).

Authority. Section 703(a) of the Tariff Act of 1930 (19 U.S.C. § 1673b) requires the Commission to make a determination of whether there is a reasonable indication that an industry in the United States is materially injured, or is threatened with material injury, or the establishment of an industry in the United States is materially retarded, by reason of imports of the merchandise which is the subject of the investigation by the administering authority (Commerce). Such a determination must be made within 45 days after the date on which a petition is filed under section 702(b). Accordingly, the Commission, on November 17, 1981, instituted preliminary countervailing duty investigation No. 701–TA–82. This investigation will be subject to the provisions of part 207 of the Commission's Rules of Practice and Procedure (19 CFR 207, 44 FR 76457) and particularly, subpart B thereof.

Written submissions. Any person may submit a written statement of information pertinent to the subject matter of this investigation to the Commission on or before December 4, 1981. A signed original and nineteen copies of such statements must be submitted.

Any business information which a submitter desires the Commission to treat as confidential shall be submitted separately and each sheet must be clearly marked at the top "Confidential Business Data". Confidential submission must conform with the requirements of section 201.6 of the Commission's Rules of Practice and Procedure

(19 CFR § 201.6). All written submissions, except for confidential business data, will be available for public inspection.

Conference. The Director of Operations of the Commission has scheduled a conference in connection with this investigation for 10:00 a.m., e.s.t., on November 30, 1981, at the U.S. International Trade Commission Building, 701 E Street NW., Washington, D.C. parties wishing to participate in the conference should contact Mr. John MacHatton (202–523–0439) by 5:00 p.m., e.s.t., November 25, 1981. It is anticipated that parties opposed to such petition will each be collectively allocated one hour within which to make an oral presentation at the conference. Further details concerning the conduct of the conference will be provided by Mr. MacHatton.

Inspection of the petition. The petition filed in this case is available for public inspection at the Office of the Secretary, U.S. International Trade Commission.

By order of the Commission.

Issued: November 17, 1981.

KENNETH R. MASON,
Secretary.

Index

U.S. Customs Service

	T.D. No.
Treasury decisions: Customhouse broker license—cancellation	81-289
Customs Regulations amended:	
Articles of steel; AISI category numbers, sec. 141.89	81-291
Country of origin marking, sec. 134.0	81-290
Crude petroleum, sec. 10.179	81-292

Court of Customs and Patent Appeals

	Appeal No.
Hiranport Company v. United States Treasury Department acting by and through the United States Customs Service	81-14
United States v. J. E. Mamiye & Sons	81-6

U.S. GOVERNMENT PRINTING OFFICE : 1981 O - 357-930

DEPARTMENT OF THE TREASURY
U.S. CUSTOMS SERVICE
WASHINGTON, D.C. 20229

OFFICIAL BUSINESS
PENALTY FOR PRIVATE USE, $300

POSTAGE AND FEES PAID
DEPARTMENT OF THE TREASURY (CUSTOMS)
(TREAS. 552)

15/50

Customs Bulletin

Regulations, Rulings, Decisions, and Notices concerning Customs and related matters

and Decisions

of the United States Court of Customs and Patent Appeals and the United States Court of International Trade

Vol. 15 DECEMBER 16, 1981 No. 50

NEWARK PUBLIC LIBRARY

JAN 19 1982

U. S. GOVT. PUBS.
DEPOSITORY 376

This issue contains

T.D. 81-293 Through 81-298
General Notices
Recent Unpublished Customs Service Decisions
Appeal No. 81-10
Slip-Op. 81-103 Through 81-107
Protest Abstract P81/185
Reap. Abstracts R81/407 Through R81/440
International Trade Commission Notices

THE DEPARTMENT OF THE TREASURY
U.S. Customs Service

T1.11/3:

NOTICE

The abstracts, rulings, and notices which are issued weekly by the U.S. Customs Service are subject to correction for typographical or other printing errors. Users may notify the U.S. Customs Service, Logistics Management Division, Washington, D.C. 20229, of any such errors in order that corrections may be made before the bound volumes are published.

For sale by the Superintendent of Documents, U.S. Government Printing Office, Washington, D.C. 20402. Price: $2.50 (single copy domestic); $3.15 (single copy foreign). Subscription price: $95.00 a year domestic; $118.75 a year foreign.

U.S. Customs Service

Treasury Decisions

(T.D. 81-293)

Reimbursable Services—Excess Cost of Preclearance Operations

DEPARTMENT OF THE TREASURY
OFFICE OF THE COMMISSIONER OF CUSTOMS
Washington, D.C., November 25, 1981.

Notice is hereby given that pursuant to Section 24.18(d), Customs Regulations (19 CFR 24.18(d)), the biweekly reimbursable excess costs for each preclearance installation are determined to be as set forth below and will be effective with the pay period beginning December 13, 1981.

Installation:	*Biweekly excess cost*
Montreal, Canada	$16, 152
Toronto, Canada	30, 393
Kindley Field, Bermuda	5, 991
Nassau, Bahama Islands	13, 778
Vancouver, Canada	10, 511
Winnipeg, Canada	1, 676
Freeport, Bahama Islands	11, 025
Calgary, Canada	7, 863
Edmonton, Canada	3, 925

MITCHELL A. LEVINE,
Acting Comptroller.

Published in the Federal Register Dec. 3, 1981 (46 FR 58773)

(T.D. 81-294)

Bonds

Approval and discontinuance of Carrier's Bonds, Customs Form 3587

Bonds of carriers for the transportation of bonded merchandise have been approved or discontinued as shown below. The symbol "D"

indicates that the bond previously outstanding has been discontinued on the month, day, and year represented by the figures which follow. "PB" refers to a previous bond, dated as represented by figures in parentheses immediately following, which has been discontinued. If the previous bond was in the name of a different company or if the surety was different, the information is shown in a footnote at the end of the list.

Dated: November 27, 1981.

Name of principal and surety	Date of bond	Date of approval	Filed with district director/area director/amount
M. Bruenger & Co., Inc., 6250 N. Broadway, Wichita, KS; motor carrier; The North River Ins. Co. D 11/21/81	Nov. 21, 1978	Nov. 22, 1978	St. Louis, MO $50,000
C L & A Motor Delivery, Inc., 4110 Dane Ave., Cincinnati, OH; motor carrier; St. Paul Fire & Marine Ins. Co. D 11/6/81	Apr. 12, 1974	Apr. 22, 1974	Cleveland, OH $50,000
C.O.D.E., Inc., 4800 Colorado Blvd., Denver, CO; motor carrier; Ins. Co. of North America (PB 11/17/80) D 11/17/81 [1]	Nov. 17, 1981	Nov. 17, 1981	El Paso, TX $25,000
Courchesne Larose Ltd., 1455 Rue Bercy, Montreal, Quebec, Canada; motor carrier; The Hanover Ins. Co. D 11/2/81	July 7, 1977	June 24, 1977	Ogdensburg, NY $25,000
Craig Transportation Co., 26899 Eckel Rd., Perrysburg, OH; motor carrier; Ohio Farmers Ins. Co.	Sept. 21, 1981	Oct. 21, 1981	Cleveland, OH $50,000
Crewe Transfer, Inc., Crewe, VA; motor carrier; Ins. Co. of North America (PB 9/24/79) D 11/4/81 [2]	Sept. 24, 1981	Nov. 4, 1981	Norfolk, VA $25,000
C. H. Dredge & Co., Inc., (A UT Corp.) 918 South 2000 West, Syracuse, UT; motor carrier; American Manufacturers Mutual Ins. Co. D 11/1/81	Oct. 30, 1979	Dec. 12, 1979	San Francisco, CA $25,000
Evans Delivery Co., Inc., P.O. Box 268, Pottsville, PA; motor carrier; Ohio Casualty Ins. Co.	July 30, 1981	July 30, 1981	Philadelphia, PA $50,000
Everette Truck Line, Inc., Washington, NC; motor carrier; U.S. Fidelity & Guaranty Co.	Oct. 23, 1981	Nov. 5, 1981	Wilmington, NC $25,000
F-B Truck Line Co., 1945 South Redwood Rd., Salt Lake City, UT; motor carrier: Commercial Union Ins. Co. D 8/17/81	Sept. 3, 1974	Aug. 15, 1975	San Francisco, CA $25,000
Hamilton Trucking Co. of Oklahoma, Inc., 12612 E. Admiral Place, Tulsa, OK; motor carrier; Ins. Co. of North America (PB 10/1/80) D 10/26/81 [3]	Oct. 1, 1981	Oct. 26, 1981	Dallas/Fort Worth, TX $25,000

Name of principal and surety	Date of bond	Date of approval	Filed with district director/area director/amount
Harbor Transportation Co., Inc., 30 Waterfront St., New Haven, CT; motor carrier; The Travelers Indemnity Co.	Sept. 18, 1981	Nov. 6, 1981	Bridgeport, CT $50,000
Harbor Towing Corp.—(See Interstate & Ocean Transport Co.)			
Hyman Freightways, Inc., 1745 University Ave., St. Paul, MN; motor carrier; Transamerica Ins. Co. (PB 11/10/69) D 11/10/81[4]	Sept. 23, 1981	Nov. 11, 1981	Minneapolis, MN $30,000
Interstate & Ocean Transport Co. and Harbor Towing Corp., an affiliate, 1400 Three Parkway, Phila, PA; water carrier; St. Paul Fire & Marine Ins. Co.	Sept. 28, 1981	Nov. 4, 1981	Philadelphia, PA $50,000
Jet Air Freight & Parcel Delivery, Inc., P.O. Box 9313—Baer Field, Fort Wayne, IN; motor carrier; American States Ins. Co. D 10/26/81	Dec. 31, 1980	Apr. 6, 1981	Chicago, IL $30,000
Kabat Express, Inc., 1944 Scranton Rd., Cleveland, OH; motor carrier; St. Paul Fire & Marine Ins. Co.	Oct. 5, 1981	Nov. 6, 1981	Cleveland, OH $50,000
Mt. Vernon Motor Transportation Co., Inc., 460 "E" St., South Boston, MA; motor carrier; Peerless Ins. Co. D 11/1/81	Nov. 1, 1976	Apr. 11, 1977	Boston, MA $25,000
Machado Trucking, Inc., Pier D, Berth 34, Long Beach, CA; motor carrier; Lumbermens Mutual Casualty Co.	Apr. 22, 1981	Oct. 16, 1981	Los Angeles, CA $50,000
Missouri Pacific Air Freight, Inc., 210 N. 13th St., St. Louis, MO; freight forwarder; St. Paul Fire & Marine Ins. Co. (PB 11/6/79) D 10/29/81	Sept. 28, 1981	Oct. 29, 1981	St. Louis, MO $100,000
Missouri Pacific Truck Lines, Inc., 210 N. 13th St., St. Louis, MO; motor carrier; St. Paul Fire & Marine Ins. Co. (PB 8/29/72) D 10/29/81	Sept. 28, 1981	Oct. 29, 1981	St. Louis, MO $100,000
C. W. Mitchell, Inc., 4401 North Westshore Blvd., Tampa, FL; motor carrier: St. Paul Fire and Marine Ins. Co. D 6/8/81	June 8, 1979	June 8, 1979	Tampa, FL $25,000
Overland Express, Division of TNT Canada, Inc., 2 Robert Speck Pkwy, Mississauga, Ontario, Canada; motor carrier; Continental Ins. Co. (PB 7/14/72) D 11/2/81[5]	Oct. 7, 1981	Nov. 2, 1981	Detroit, MI $50,000
Smith Tug & Barge Co., P.O. Box "S", Rainier, OR; water carrier; Hartford Accident & Indemnity Co. D 11/27/81	Feb. 5, 1971	Apr. 12, 1971	Portland, OR $50,000

Name of principal and surety	Date of bond	Date of approval	Filed with district director/area director/amount
TNT Canada, Inc.—(See Overland Express) Transcold Express Inc., P.O. Box 61228, Dallas, TX; motor carrier: Hartford Accident & Indemnity Co. D 10/27/81	Dec. 18, 1980	Apr. 7, 1981	Chicago, IL $50,000

[1] Surety is The Ohio Casualty Ins. Co.
[2] Surety is U.S. Fidelity & Guaranty Co.
[3] Surety is National Surety Corp.
[4] Surety is Fireman's Fund Ins. Co.
[5] Principal is Overland Western Ltd.

BON-3-03

GEORGE C. STEUART
(For Marilyn G. Morrison, Director,
Carriers, Drawback and Bonds Division).

(T.D. 81-295)

Foreign Currencies—Daily Rates for Countries Not on Quarterly List

The Federal Reserve Bank of New York, pursuant to section 522(c) Tariff Act of 1930 as amended (31 U.S.C. 372 (c)), has certified buying rates for the dates and foreign currencies shown below. The rates of exchange, based on these buying rates, are published for the information and use of Customs officers and others concerned pursuant to Part 159, Subpart C, Customs Regulations (19 CFR 159, Subpart C).

Argentina peso:	
October 19–22, 1981	$0.000166
October 23, 1981	.000163
Chile peso:	
October 19–23, 1981	$0.025575
Colombia peso:	
October 19–23, 1981	$0.017683
Greece drachma:	
October 19, 1981	$0.017699
October 20, 1981	.017778
October 21, 1981	.017637
October 22, 1981	.017452
October 23, 1981	.017406
Indonesia rupiah:	
October 19–23, 1981	$0.001582

Israel shekel:	
October 19–21, 1981	$0.072674
October 22–23, 1981	.071942
Peru sol:	
October 19–23, 1981	$0.002188
South Korea won:	
October 19–23, 1981	$0.001459

(LIQ-01-03 O:C:E)
Dated: November 18, 1981.

KENNETH A. RICH,
Acting Chief,
Customs Information Exchange.

(T.D. 81-296)

Foreign Currencies—Daily Rates for Countries Not on Quarterly List

The Federal Reserve Bank of New York, pursuant to section 522(c), Tariff Act of 1930, as amended (31 U.S.C. 372(c)), has certified buying rates for the dates and foreign currencies shown below. The rates of exchange, based on these buying rates, are published for the information and use of Customs officers and others concerned pursuant to Part 159, Subpart C, Customs Regulations (19 CFR 159, Subpart C).

Argentina peso:	
October 26–29,1981	$0.000163
October 30, 1981	.000161
Chile peso:	
October 26–30, 1981	$0.025575
Colombia peso:	
October 26–30, 1981	$0.017683
Greece drachma:	
October 26, 1981	$0.017129
October 27–29, 1981	.017182
October 30, 1981	.017584
Indonesia rupiah:	
October 26–30, 1981	$0.001582
Israel shekel:	
October 26–30, 1981	$0.071942
Peru sol:	
October 26–29, 1981	$0.002188
October 30, 1981	.002179

South Korea won:
October 26–29,1981 ..... $0.001459
October 30, 1981 ..... .001453

(LIQ–01–03 O:C:E)

Dated: November 29, 1981.

KENNETH A. RICH,
Acting Chief,
Customs Information Exchange.

(T.D. 81–297)

Foreign Currencies—Variances From Quarterly Rate

The following rates of exchange are based upon rates certified to the Secretary of the Treasury by the Federal Reserve Bank of New York, pursuant to section 522(c), Tariff Act of 1930, as amended (31 U.S.C. 372(c)), and reflect variances of 5 per centum or more from the quarterly rate published in Treasury Decision 81–285 for the following countries. Therefore, as to entries covering merchandise exported on the dates listed, whenever it is necessary for Customs purposes to convert such currency into currency of the United States, conversion shall be at the following rates.

Brazil cruziero:
October 20–23, 1981 ..... $0.008872
Switzerland franc:
October 19, 1981 ..... $0.536337

(LIQ–03–01 O:C:E)

Dated: November 18, 1981.

KENNETH A. RICH,
Acting Chief,
Customs Information Exchange.

(T.D. 81–298)

Foreign Currencies—Variances From Quarterly Rate

The following rates of exchange are based upon rates certified to the Secretary of the Treasury by the Federal Reserve Bank of New York, pursuant to section 522(c), Tariff Act of 1930, as amended (31 U.S.C. 372(c)), and reflect variances of 5 per centum or more from the quarterly rate published in Treasury Decision 81–285 for the following countries. Therefore, as to entries covering merchandise exported

on the dates listed, whenever it is necessary for Customs purposes to convert such currency into currency of the United States, conversion shall be at the following rates.

Brazil cruziero:	
October 26, 1981	$0.008872
October 27–30, 1981	.008709
Hong Kong dollar:	
October 28, 1981	$0.170882
Switzerland franc:	
October 29, 1981	$0.537634
October 30, 1981	.544959

(LIQ-03-01 O:C:E)

Dated: November 20, 1981.

KENNETH A. RICH,
Acting Chief,
Customs Information Exchange.

357-931 O - 81 - 2

U.S. Customs Service

General Notices

(19 CFR Part 134, Subpart D

Marking Imported Bolts, Nuts, and Rivets With Their Country of Origin

AGENCY: U.S. Customs Service, Department of the Treasury.

ACTION: Withdrawal of proposed rule.

SUMMARY: This document withdraws a notice published in the Federal Register on August 10, 1979 (44 FR 47103), which proposed to amend the Customs Regulations to delete bolts, nuts, and rivets from the list of imported articles exempted from the country of origin marking requirements. Adoption of the proposal would have required bolts, nuts, and rivets to comply with the marking requirements in order to be imported into the United States.

After analysis of the comments received in response to the proposal and further review of the matter, Customs has determined that the proposal should not be adopted.

EFFECTIVE DATE: 11–30–81.

FOR FURTHER INFORMATION CONTACT: Samuel Orandle, Entry Procedures and Penalties Division, U.S. Customs Service, 1301 Constitution Avenue, NW., Washington, D.C. 20229 (202–566–5765).

SUPPLEMENTARY INFORMATION:

Background

Unless expressly excepted, all articles of foreign origin imported into the United States are required by section 304, Tariff Act of 1930, as amended (19 U.S.C. 1304), to be marked in a conspicuous place in a legible, indelible, and permanent fashion so as to indicate, in English, to the ultimate purchasers in the United States, the country of origin of the articles. Among the exceptions to the country of origin marking requirements are articles which the Secretary of the Treasury, pursuant to public notice published in the Treasury Decisions before July 1, 1939, determined "were imported in substantial quantities

during the five-year period immediately preceding January 1, 1937, and were not required during such period to be marked to indicate their origin * * * " (19 U.S.C. 1304(a)(3)(J)). Under 19 U.S.C. 1304(a)(3)(J), notice that bolts, nuts, and rivets were imported in substantial quantities during the five-year period immediately preceding January 1, 1937, and were not required during the period to be marked to indicate their country of origin was given in T.D. 49896 (4 FR 2509). The full list of articles exempted from marking requirements under 19 U.S.C. 1304(a)(3)(J) is set forth in section 134.33, Customs Regulations (19 CFR 134.33), referred to as the "J-List."

On June 8, 1978, the Treasury Department received a petition which alleged that bolts, nuts, and rivets were not imported into the United States in substantial quantities from 1932 to 1936 and, therefore, should not be exempted from country of origin marking requirements.

After review of the evidence in the petition, Customs published a notice in the Federal Register on August 10, 1979 (44 FR 47103), proposing that imported bolts, nuts, and rivets be removed from the "J-List" maintained in section 134.33.

Interested parties were given until October 9, 1979, to submit written comments concerning the proposal. The period of time for the submission of comments was extended until November 9, 1979, by a notice published in the Federal Register on October 10, 1979 (44 FR 58527). As discussed below, a majority of the numerous comments received opposed the proposal.

Discussion of Comments

A number of commenters assert that the test in this matter is not whether the imports are or are not substantial in comparison to U.S. production nor whether they represent a substantial portion of the domestic market. Several note that prior decisions removing articles from the "J-List" do not refer to such a test. Furthermore, the figures presented were considered by experts in 1939 and there is no need to revoke that decision now because the statistical evidence submitted by the petitioner does not establish clearly that bolts, nuts, and rivets were not imported in substantial quantities during the 5-year period in question.

The commenters further suggest that the Secretary of the Treasury is without authority to amend the "J-List" unless it is judicially proven that previous decisions regarding the "J-List" are demonstrated to be arbitrary, capricious, or an abuse of discretion. They contend that without knowledge of the Secretary's thought process in determining to place bolts, nuts, and rivets on the "J-List,"

Customs should not now, 40 years later, reverse the decision that the merchandise was imported in substantial quantities.

Other commenters, however, are of the opinion that implementation of the proposal would correct an error in originally placing fasteners on the "J-List" because the facts indicate that they were not imported in substantial quantities from 1932 to 1936.

Customs is of the opinion that these comments raise the primary questions which must be addressed in determining whether bolts, nuts, and rivets should be removed from the "J-List".

We agree that the issue is not whether imports are substantial in comparison to U.S. domestic production nor whether they comprise a substantial portion of the domestic market. We also agree that decisions made by the Secretary regarding this matter in 1939 should not be overturned unless they are arbitrary, capricious, or an abuse of discretion. However, we do not believe that this requires a judicial determination.

It must be presumed as a matter of law that the Secretary complied with statutory requirements in promulgating the "J-List," including a lawful determination that the classes or kinds of articles on the list were imported in substantial quantities during the period in question. While this presumption is rebuttable, Customs must require a strict standard of proof when asked to overturn an act of the Secretary taken in contemporaneous implementation of a statute 40 years ago.

A decision to remove bolts, nuts, and rivets from the "J-List" at this time would imply that the Secretary's action initially placing them on the list was improper. The courts have long given considerable weight to the judgment of administrative agencies charged with the interpretation and enforcement of statutes, especially when the judgment has been exercised contemporaneously with the enactment of the statute.

It is argued both that removal of bolts, nuts, and rivets from the "J-List" is necessary to carry out the intent of Congress and that removal would violate the intent of Congress in enacting country of origin marking requirements. Customs is of the opinion that the Secretary's decision to include nuts, bolts, and rivets on the "J-List" was reasonable and in accordance with the intent of Congress.

Some commenters suggest that practical problems which may arise if the proposal is implemented would, among others, include: difficulties inscribing long names to such small articles; cosmetic objections to marking items where the country of origin would be visible on the final product; and, the inability to mark certain articles because it would impair the precision and function of the finished product.

Other commenters contend that all products should be marked to give consumers freedom of choice in making purchasing decisions.

We agree that practical problems could arise if the proposal were implemented. However, the nature and extent of such problems is impossible to predict. We do not agree that all products should be marked. The law provides exceptions to country of origin marking requirements—*e.g.*, the "J-List."

Additional commenters note that even if the proposal were adopted, other exceptions to the marking requirements would be or should be applicable to certain types of bolts, nuts, and rivets.

Section 304(a)(3), Tariff Act of 1930 (19 U.S.C. 1304(a)(3)), provides exceptions to the country of origin marking requirements. The section contains 11 exceptions, including the "J-List." It is possible that bolts, nuts, and rivets could still qualify for one of the other exceptions if the proposal were adopted.

Commenters also observe that implementation of the proposal would: (1) impose an additional burden on foreign manufacturers; (2) increase the cost of production for foreign manufacturers; (3) increase the price of imported bolts, nuts, and rivets; (4) impose a nontariff barrier which may have an adverse effect on international trade; and, (5) increase the administrative burden on the Customs Service, Court of International Trade, and other Government agencies due to increased requests for other exceptions to the country of origin marking requirements.

Others believe that: (1) Customs should allow a single symbol or logo to be substituted for the country of origin; (2) country of origin marking would be duplicative and perhaps confusing where fasteners are already marked with the manufacturer's name; (3) only U.S. goods need to be marked with the country of origin; (4) the proposal is merely an attempt to protect the domestic fastener industry; and, (5) marking only the packages containing the merchandise would provide adequate notice of the country of origin to the ultimate purchaser.

Although these comments are not entirely on point, Customs believes that certain concerns are valid and that some of the problems which could arise as a result of adoption of the proposal are real. Other observations are speculative or do not provide Customs with sufficient information to address the issues presented. Some have no basis in law, and others are contrary to the purpose of the country of origin marking requirements.

Because of its decision in this matter, Customs does not believe it is necessary to address each of these comments.

ACTION

WITHDRAWAL OF PROPOSAL

In view of the foregoing, Customs has determined that the proposed change should not be adopted. Accordingly, the notice published in the Federal Register on August 10, 1979 (44 FR 47103), proposing to amend section 134.33, Customs Regulations, to delete bolts, nuts, and rivets from the "J-List," is withdrawn.

DRAFTING INFORMATION

The principal author of this document was Lawrence P. Dunham, Regulations Control Branch, Office of Regulations and Rulings, U.S. Customs Service. However, personnel from other Customs offices participated in its development.

ALFRED R. DE ANGELUS,
Acting Commissioner of Customs.

Approved: November 20, 1981.
JOHN M. WALKER, JR.,
Assistant Secretary of the Treasury.

[Published in the Federal Register Nov. 30, 1981 (46 FR 58094)]

AMERICAN MANUFACTURER'S PETITION TO CLASSIFY HOUSEHOLD GLASSWARE; EXTENSION OF TIME FOR PUBLIC COMMENT

AGENCY: U.S. Customs Service, Department of the Treasury.

ACTION: Notice of extension of time for comment.

SUMMARY: This notice extends the period of time within which interested members of the public may submit comments with respect to a notice of receipt of an American manufacturer's petition relating to the classification of imported household glassware. A document inviting the public to comment on this notice of receipt of an American manufacturer's petition was published in the Federal Register on November 12, 1981 (46 FR 55822). Comments were to have been received on or before December 14, 1981. A request has been received to extend the period of time for the submission of comments claiming that additional time is needed to secure and have tested imported glassware, and prepare a brief of the pertinent facts and law in response to the invitation for comments. Customs believes additional time for comment is warranted. Accordingly, this notice extends the period of time for comment to February 16, 1982.

DATES: Comments must be received on or before February 16, 1982.

ADDRESS: Written comments (preferably in triplicate) may be addressed to the Commissioner of Customs, Attention: Regulations Control Branch, U.S. Customs Service, 1301 Constitution Avenue, NW., Room 2426, Washington, D.C. 20229.

FOR FURTHER INFORMATION CONTACT: Thomas J. Lindmeier, Classification and Value Division, U.S. Customs Service, 1301 Constitution Avenue, NW., Washington, D.C. 20229 (202–566–5727).

Dated: December 1, 1981.

DONALD W. LEWIS,
Director, Office of Regulations and Rulings.

[Published in the Federal Register Dec. 7, 1981 (46 FR 59690)]

Recent Unpublished Customs Service Decisions

The following listing of recent administrative decisions issued by the U.S. Customs Service, and not otherwise published, is published for the information of Customs officers and the importing community. Although the decisions are not of sufficient general interest to warrant publication as Customs Service Decisions, the listing describes the issues involved and is intended to aid Customs officers and concerned members of the public in identifying matters of interest which recently have been considered by the U.S. Customs Service.

A copy of any decision included in this listing, identified by its date and file number, may be obtained in a form appropriate for public distribution upon written request to the Office of Regulations and Rulings, Attention: Legal Retrieval and Dissemination Branch, Room 2404, U.S. Customs Service, 1301 Constitution Avenue, N.W., Washington, D.C. 20229. These copies will be made available at a cost to the requester of $0.10 per page. However, the Customs Service will waive this charge if the total number of pages copied is ten or less.

Decisions listed in earlier issues of the CUSTOMS BULLETIN, through June 15, 1981, are available in microfiche format at a cost of $34.05 ($0.15 per sheet of fiche). It is anticipated that additions to the microfiche will be made quarterly and subscriptions are available. Requests for the microfiche now available and for subscriptions should be directed to the Legal Retrieval and Dissemination Branch. Subscribers will automatically receive updates as they are issued and will be billed accordingly.

Dated: December 2, 1981.

B. JAMES FRITZ,
Director,
Regulations Control and Disclosure Law Division.

Date of Decision	Number	Issue
10-27-81	066916	Classification: Warm-up suits (382.78)
11-13-81	068235	Classification: Sport glove made of cabretta leather (734.56, 735.07)

Date of Decision	Number	Issue
10-27-81	068351	Classification: Denim jackets (380.12, 382.12)
11-06-81	068527	Classification: Optical reader/automatic coding system used to code/sort mail (664.10, 676.15, 676.30, 684.64, 685.90)
11-06-81	068585	Classification: Hollow copper conductors (685.90)
10-27-81	068689	Classification: Chrame-plated tubular stainless steel sleeve used on shafts to replace metal worn by oil seal contact (681.39, 692.02-692.16, 692.32)
11-12-81	068771	Classification: Machine tools (649.43, 674.32)
11-05-81	068812	Classification: Wrecked BMW automobiles (692.10, 793.00)
11-12-81	068846	Classification: Ice scraper brushes, squeegee/sponges, floor mats (750.70, 774.55, 774.60)
11-05-81	068935	Classification: Automobiles: 1982 model Subaru BRAT is not an automobile truck for tariff purposes (692.10)
11-05-81	068986	Classification: Computer disk drive used in a computer system to expand storage and other capabilities (676.30, 676.52, 678.50)
10-23-81	069033	Classification: Printed wiring cards (PWCs) used in digital switching systems (684.62, 737.05)
10-30-81	069065	Classification: Electronic typewriters (676.05, 676.07)
10-30-81	069075	Classification: Sewing machine attachments (672.25)
11-12-81	069089	Classification: Grid lacquer paper (254.85)
10-30-81	069160	Classification: Automotive exhaust headers (660.67, 692.32)
11-05-81	069195	Classification: Rayon tote bag (386.09, 706.24).
11-12-81	069258	Classification: Accelerometer used in engine vibration monitoring system (688.47, 712.49).
05-13-81	105149	Vessels: 46 U.S.C. 316(a) prohibits a foreign tug from towing a U.S. vessel for part of a coastwise voyage even though conducted on the high seas.
10-26-81	105341	Vessels: Transshipment of merchandise for export in a LASH barge between mother vessels in a U.S. port other than at the U.S. port where initially laden constitutes a violation of 46 U.S.C. 883.
11-04-81	105356	Vessels: Debris that will not be used commercially or in trade, but is dumped worthless, is not considered "merchandise" under 46 U.S.C. 883 and may be transported between points embraced within the coastwise laws.
11-09-81	105368	Vessels: Tonnage to be used in computing the tonnage tax on a dual tonnage vessel.
11-13-81	105381	Vessels: Refund of special tonnage tax and light money assessed pursuant to 46 U.S.C. 121 and 46 U.S.C. 128.
11-02-81	105384	Instruments of International Traffic: "Porta Bins" used in the transportation of organic perioxides are considered instruments of international traffic within the meaning of 19 U.S.C. 1322(a) and 19 C.F.R. 10.41a.

357-931- 0 81 - 3

Date of Decision	Number	Issue
11–16–81	105403	Vessels: The dutiable status of new and used British sailing yachts imported for sale or charter is dependent upon appraised value.
11–09–81	542549	Value: Advertising allowance freely offered to all purchasers for export to the U.S. is not dutiable.
11–10–81	542558	Value: Dutiability of certain quota charges under transaction value paid separately to the foreign processor.
10–30–81	542603	Value: A buying agent's functions and responsibilities under the TAA and dutiable status of quota payments.
11–12–81	717359	Marking: Country of origin marking requirements regarding barbecue grill parts.

Decisions of the United States Court of Customs and Patent Appeals

(Appeal No. 81–10)

MOUNT WASHINGTON TANKER COMPANY, A SUBSIDIARY OF VICTORY CARRIERS, INC. *v.* THE UNITED STATES

1. JUDGMENT OF U.S. CT. OF INTERNATIONAL TRADE—REPAIRS MADE ON U.S. VESSEL IN INTERNATIONAL WATERS BY FOREIGN CREW

The judgment of the United States Court of International Trade that "repairs made in a foreign country" in 19 U.S.C. 1466(a) must be interpreted to comprehend repairs performed on board a vessel in international waters by workers hired as a special repair crew from a foreign country is affirmed.

2. ID. MEANING OF "FOREIGN COUNTRY"

"Foreign country" has no common meaning which is independent of statutory context.

3. CONGRESSIONAL INTENT TO IMPOSE DUTY TO EQUALIZE COSTS OF REPAIRS PERFORMED BY FOREIGN VERSUS DOMESTIC LABOR

The intention of Congress underlying 19 U.S.C. 1466(a) was to equalize, by the imposition of the duty prescribed by statute, the relative costs of repairs performed by foreign versus domestic labor, in order to encourage U.S. shipowners to employ U.S. labor whenever possible.

F. 2d

MOUNT WASHINGTON TANKER COMPANY, A SUBSIDIARY OF VICTORY CARRIERS, INC., APPELLANT *v.* THE UNITED STATES, APELLEE

No. 81–10

United States Court of Customs and Patent Appeals, November 25, 1981, Appeal from United States Court of International Trade.

[Affirmed]

John S. Rode and *David C. Williams*, attorneys for appellant. W. Thaddeus Miller amicus curiae Ogden Marine, Inc.

Stuart E. Shiffer, Acting Asst. Atty. General, *David M. Cohen*, Director, *Joseph I. Liebman*, Attorney in charge and *Madeline B. Kuflik*, attorneys for appellee.

[Oral argument on October 5, 1981 by *David C. Williams* for appellant, *W. Thaddeus Miller* for amicus curiae Ogden Marine, Inc., and *Madeline B. Kuflik* for appellee.]

Before MARKEY, *Chief Judge*, RICH, BALDWIN, MILLER, and NIES, *Associate Judges*.

BALDWIN, *Judge*.

This is an appeal from a decision of the United States Court of International Trade [1] in which the phrase "repairs made in a foreign country" appearing in 19 U.S.C. 1466(a) [2] was construed, apparently for the first time. On the facts presented, the Court of International Trade concluded, *inter alia*, that the routine ship repairs on board appellant's oil tanker while it was on the high seas by employees of a Swedish corporation hired for the task were "made in a foreign country" within the meaning of § 1466(a) and that the costs of such repairs were subject to the 50% duty imposed by statute. [1] We affirm.

BACKGROUND

There is no dispute between the parties over the pertinent facts, which can be summarized briefly. Appellant operates the oil tanker T/S *Mount Washington*, a vessel of U.S. registry. In 1968 the *Mount Washington* was under charter to deliver oil between various Pacific Ocean ports. During this period, the *Mount Washington* required certain routine repairs, primarily to the tanker's electrical generator. Pursuant to a preexisting agreement between appellant and Nicoverken, AB (Nicoverken), a Swedish corporation,[3] electricians and fitters employed by Nicoverken were flown from Gothenburg, Sweden, to the Philippines, to make the repairs on board the *Mount Washington*. After signing on as crewmen, the Swedish workers began the repairs on March 30, 1968, completing them on May 12, 1968, at a total cost, including labor, transportation, and material, of $11,122.61. In the meantime, appellant's tanker was within the borders of a foreign country (either the Philippines, Singapore, or Bahrein) for

---

[1] *Mount Washington Tanker Co* v *United States* No 73-6-01399, slip op 80-8 (Dec 5, 1980), hereinafter "slip opinion"

[2] The relevant portion of § 1466(a) is abstracted below:

> § *1466. Equipment and repairs of vessels subject to duty penalties*
> (a) The equipments, or any part thereof, including boats, purchased for, or the repair parts or materials to be used, or the expenses of repairs made in a foreign country upon a vessel documented under the laws of the United States to engage in the foreign or coasting trade, or a vessel intended to be employed in such trade, shall, on the first arrival of such vessel in any port of the United States, be liable to entry and the payment of an ad valorem duty of 50 per centum on the cost thereof in such foreign country.

[3] More specifically, the Swedish repair team was provided by Nicoverken through its U.S. agent, Wilson Walton International, Inc. of New Jersey, with whom appellant contracted.

a total of approximately nine days, the rest of the time being spent at sea.

When the *Mount Washington* returned to the United States, docking in Honolulu, the Customs Service assessed duties on the expenses of the repairs made by the Nicoverken employees, including in its computation of duties the expenses incurred by appellant for repairs performed both in foreign port and at sea. When its petition for remission of the duty was denied, appellant brought the present action, alleging primarily that the Customs Service had improperly included in the dutiable amount the cost of repairs performed in international waters and not "in a foreign country," as required by §1466(a).

After considering the legislative history of §1466, the trial court held that the dutiable amount must include the costs of repairs made both in foreign port and on the high seas. Before us, appellant advances three grounds for reversing the trial court's decision. First, as a matter of law, ships at sea and the property on them remain within the country of registry; consequently, on-board repairs to a U.S. registered vessel in international waters are technically performed in the United States rather than "in a foreign country." Second, well-recognized tenets of a statutory construction and the applicable case law alike require that "foreign country" be given its "common meaning," said to connote a sovereign territory. Third, even if reference to the legislative history is deemed necessary (and appellant does not concede this) the background material on §1466(a) indicates only that Congress intended the protection afforded by §1466(a) to extend solely to direct competition from foreign shipyards *per se*.

OPINION

As a preliminary issue, we must decide whether it is appropriate for us now, in construing "repairs made in a foreign country," to look behind the language of § 1466(a) to ascertain the underlying congressional intent. In their briefs, the parties have cited case law as authority both for and against the proposition that the phrase "foreign country" has some "common meaning" which is more or less divorced from the particular statutory context in which it appears. However, [2] we agree with the trial court that no common meaning for "foreign country" can be abstracted from these cases.

Moreover, we are not persuaded that *Procter & Gamble Mfg. Co.* v. *United States*, 60 Treas. Dec. 356, T.D. 45099 (1931), 19 CCPA 415, T.D. 45578, *cert. denied*, 287 U.S. 629 (1932), and its progeny [4] compel

[4] See *William Cramp Co.* v. *United States*, 70 Treas. Dec. 611, T.D. 48623 (1936); *Doremus Fisheries* v. *United States*, 61 Treas. Dec. 900, T.D. 45642 (1932).

the conclusion that a meaning for "foreign country" in § 1466(a) must be adopted from admiralty law, as appellant contends. In *Procter & Gamble*, the Customs Court (now the U.S. Court of International Trade) had denied a protest of a duty on the value of imported oil obtained from whales caught in the Ross Sea, Antarctica, and processed on board a Norwegian vessel in international waters. In disallowing protestor's claim that the whale oil was not imported from a "foreign country," and therefore was not dutiable under applicable tariff provisions, the Customs Court looked first to legislative purpose, concluding that Congress' intention to raise revenue on whale oil produced within foreign territorial limits was logically inconsistent with exempting from taxation oil produced on the high seas in a foreign vessel. In support of its decision, the Customs Court in *Procter & Gamble* cited, among others, authority dating from the previous century to the effect that vessels on the high seas are subject to the jurisdiction of the state to which they belong, i.e., they are in a sense extensions of that state' sovereignty.

Appellant argues that this latter rationale of the trial court in *Procter & Gamble* provides a definitive interpretation of "foreign country," as applied in cases, including the present one, generally concerned with the legal disposition of conduct in international waters. However, appellant has read *Procter & Gamble* too broadly, and in so doing, loses sight of the trial court's basic point of reference, congressional intent. Analogies to admiralty law, however appropriate an aid to interpreting another statute under a completely unrelated fact pattern in order to implement a different legislative policy,[5] are not necessarily relevant to, let alone binding upon, our deliberations here.[6]

In line with the foregoing, we note the statement of Chief Justice Hughes, made in a somewhat different context, that "[t]he term 'foreign country' is not a technical or artificial one, and the sense in which it is used in a statute must be determined by reference to the purpose of the particular legislation." *Burnet* v. *Chicago Portrait Co.*, 285 U.S. 1, 6 (1932) (footnote omitted).[7] Accordingly, we must look

---

[5] The purpose behind the tariff provision construed on *Procter & Gamble* was the raising of revenue. In contrast, the predominant legislative goal underlying § 1466(a) is to encourage U.S. shipowners to have their repair work done by U.S. labor. See note 8 infra, and associated text.

[6] Notably, in upholding the trial court's judment in *Procter & Gamble*, this court strongly emphasized the need to interpret "foreign country" in light of legislative intent; no mention of analogies to other legal principles was made.

[7] The issue considered by the *Burnet* Court was whether taxes levied by the State of New South Wales, a political subdivision of the Commonwealth of Australia, were paid "to any foreign country" within the meaning of the 1921 Revenue Act's foreign tax credit provision. Appellant attempts to dismiss *Burnet*, as well as the other decisions cited by appellee, on the ground that "foreign country" was not considered in any context similar to that presented in this case. Appellant thus overlooks the significance of *Burnet* and the other decisions as indicators of judicial willingness to adapt the interpretation of "foreign country" to the circumstances and legislative concerns extant in a particular case.

to the legislative history of § 1466(a) to discern the nature of the protection which Congress intended to provide, and which we are obliged to effect. *See, e.g., Sandoz Chemical Works* v. *United States*, 43 CCPA 152, C.A.D. 623 (1956).

The statutory background to Section 466 of the Tariff Act of 1930 (now 19 U.S.C. 1466) was considered in *United States* v. *Gissel*, 353 F. Supp. 768, 772 (S.D. Tex. 1973), *aff'd*, 493 F. 2d 27 (5th Cir. 1974). The federal district court in *Gissel* stated:

> The Tariff Act of 1930 included within its formal title the following purpose: "An Act to provide revenue, to regulate commerce with foreign countries, to encourage the industries of the United States to protect American labor, and for other purposes." 46 Stat. 590 (1930). This statute provides for the imposition and collection of customs duties upon entry of various foreign merchandise into the United States. Since foreign repair parts on vessels were generally thought of and classified as dutiable merchandise and since it was Congressional policy to encourage the obtaining of American flag vessel repairs in American shipyards, such repairs were expressly included as dutiable merchandise within a provision of the Tariff Act. The tariff law has contained such a provision in substantially the same form since the enactment of section 23 of the Tariff Act of 1866, 14 Stat. 183 (1866).

The predecessor to the United States Court of International Trade subsequently elaborated the analysis of the *Gissel* court, concluding:

> It is clear that the purpose of section 1466(a) was to protect the American shipbuilding and repairing industry. *United States* v. *Gissel*, 353 F. Supp. 768, 772 (S.D. Tex. 1973), *aff'd*, 493 F. 2d 27 (5th Cir. 1974). In addition to noting the Congressional purpose of the statute, in *Suwannee Steamship Company* v. *United States*, 435 F. Supp. 389, 394, 79 Cust. Ct. 19, 26, C.D. 4708 (1977), this court stated that:
>
> > "Both the hearings of the Senate Committee, and the committee's final report on section 466, evidence the concern of the committee members that the House amendment would have provided insufficient protection for American shipyards, the class for whose benefit the section was originally formulated. *See Senate Hearings on H.R. 2667*. 71st Cong., 1st Sess., Vol. XVII at 537–46 (1929). S. Rep. No. 37, 71st Cong., 1st Sess. 72 (1929)."

Erie Navigation Co. v. *United States*, 83 Cust. Ct. 47, C.D. 4820, 475 F. Supp. 160, 163 (1979).

The trial court, taking its lead from the *Gissel*, *Erie* and *Suwannee* opinions, stated (slip opinion at 17–18):

> That labor was also included in the protection afforded the domestic shipbuilding and repair industries is fully supported by the legislative history of section 1466 and its predecessor provisions. During Congressional hearings on H.R. 2667, which

became the Tariff Act of 1930, the report of the House Ways and Means Committee stated:

> "The *labor cost* in production *is an essential factor.* The average rate of wages abroad is 40 percent or less than that in the United States. While the effectiveness of foreign labor is increasing, their wage scales have not increased in proportion. This creates a serious situation not only for the manufacturer *but for the laborer.*" H.R. Rep. No. 7, 71st Cong., 1st Sess. 4 (1929). [Emphasis added.]

See also Hearings Before the Committee on Ways and Means of the House of Representatives, Tariff Readjustment—1929, 70th Cong., 2d Sess. (1929), Vol. XVI, p. 10290. It should also be noted that one of the expressly stated purposes of H.R. 2667 was "to protect American labor."

Appellant seeks to qualify the trial court's characterization of the congressional purpose of §1466(a), citing "evidence in the legislative history that the Congress intended to protect American labor, but only as a component of the United States shipyard industry." Accordingly, appellant concludes "the Congress was concerned with *shipyard* labor when it enacted the statute. Since the physical facilities of a shipyard are obviously located ashore, the Congress chose physical site of the repairs as the criterion for determining dutiability." [Emphasis in original.]

We find appellant's argument too narrowly drawn in light of [3] Congress' clear intention to equalize, by imposition of the prescribed duty, the relative costs of repairs performed by foreign versus domestic labor, in order to encourage U.S. shipowners to employ U.S. labor whenever possible. It may be true, as appellant asserts, that in §1466(a) Congress has struck a balance between competing groups (U.S. shipowners and shipyards, respectively) which represents "a limited circumscribing of the interests of * * * shipowners in favor of * * * shipyards," and that we should not so construe §1466(a) as to upset this balance by unduly burdening U.S. shipowners. Nevertheless, we fail to see how an interpretation of §1466(a) that encourages shipowners, as Congress intended, to employ U.S. labor to effect repairs, save in certain well-defined circumstances,[8] *a priori* imposes a heavier burden on shipowners than can be justified by reference to the statute.

Appellant has urged that the trial court improperly substituted worker nationality for the situs criterion Congress intended should be the touchstone for dutiability. However, we do not read the trial court's opinion as enunciating so mechanical a test. Rather, the trial court concluded that the legislative purpose of § 1466(a) would

---

[8] Congress has indicated quite clearly the circumstances under which duties paid on repair costs may be remitted. For example, the Secretary of the Treasury is authorized to refund duties paid if the repairs are compelled by stress of weather of other casualty and are prerequisite to the vessel's seaworthiness, 19 U.S.C. §1466(d)(1), or are performed by U.S. residents or regular crewmembers, 19 U.S.C. §1466(d)(2).

be frustrated if those costs incurred when appellant chose to forego available U.S. labor [9] and to have routine repairs performed on board by workers hired as a special repair crew from a foreign country were declared non-dutiable.

We fully concur in the judgment of the trial court on this point. Appellant availed itself of foreign labor to the detriment of the U.S. workers that Congress sought to protect. Therefore, "repairs made in a foreign country" in § 1466(a) must be interpreted to compregend the repairs made to appellant's vessel in international waters.

CONCLUSION

The judgment of the United States Court of International Trade is *affirmed.*

[9] Appellant has conceded that American shipyards can perform onboard repairs, in competition with foreign ship-building and repair corporations like Nicoverken.

United States Court of International Trade

One Federal Plaza
New York, N.Y. 10007

Chief Judge

Edward D. Re

Judges

Paul P. Rao
Morgan Ford
Scovel Richardson
Frederick Landis
James L. Watson
Herbert N. Maletz
Bernard Newman
Nils A. Boe

Senior Judge

Samuel M. Rosenstein

Clerk

Joseph E. Lombardi

Decisions of the United States Court of International Trade

(Slip Op. 81–103)

BORDER BROKERAGE CO., INC., PLAINTIFF *v.* UNITED STATES, DEFENDANT

Before RICHARDSON, *Judge*.

Consolidated Court No. 76–11–02551

Halibut snaps—Clasps

The subject merchandise consisting of halibut snaps and exported from Canada was classified under TSUS item 731.60, as modified, as *fishing tackle not specially provided for*. The importer claimed the

merchandise should be classified under TSUS item 745.68, as modified, as *clasps or snap fasteners*. The weight of the evidence, including definitions from lexicons read into the record, and the case law support plaintiff's claim.

***Held*, judgment for the plaintiff. The term "fishing tackle" in item 731.60 of the Tariff Schedules of the United States is limited to implements and equipment used in fishing for sport and does not include halibut snaps. Halibut snaps are "clasps" or "snap fasteners" described as "fishing gear" or "terminal gear" used for commercial fishing and should be classified under item 745.68 TSUS.**

[Judgment for plaintiff.]

(Decided November 16, 1981)

George R. Tuttle, A Professional Corporation (*Stephen S. Spraitzar* at the trial and on the briefs), for the plaintiff.

J. Paul McGrath, Assistant Attorney General; *Joseph I. Liebman*, Attorney in Charge, International Trade Field Office, Commercial Litigation Branch (*Madeline B. Kuflik* at the trial; *Susan Handler-Menahem* on the brief), for the defendant.

RICHARDSON, *Judge:* The merchandise in this consolidated case, consisting of halibut snaps, was exported from Canada at various times between 1971 and 1976, and classified in liquidation under TSUS item 731.60, as modified by T.D. 68–9, as *fishing tackle, not specially provided for*, and assessed for duty at 15 or 12.5 *per centum ad valorem*, depending upon the date of entry. It is primarily claimed by the importer that the merchandise should be classified under TSUS item 745.68, as modified by T.D. 68–9, as *clasps or snap fasteners* valued over 20 cents per dozen pieces or parts, at the duty rate of 10 or 8.5 *per centum ad valorem*, depending upon the date of entry. Alternatively, the importer claims that the merchandise should be classified under TSUS item 657.20, as modified by T.D. 68–9, as articles of iron or steel, not plated or coated with precious metal, at the duty rate of 11 or 9.5 *per centum ad valorem*, depending upon the date of entry.

There is no question but that the imported halibut snaps are articles or implements employed in fishing. Defendant admits that the imported merchandise consists of a metallic fastening which is used to connect fishing lines, that it contains a metallic device with a catch or fastening that closes or locks with a click and is provided with a spring, and that it is made of iron or steel not coated or plated with a precious metal (exhibit 5).

Gerald Packard, head of the Commercial Crab, Black Cod and Halibut Fisheries at Seattle Marine & Fishing Supply Company, testified that he is familiar with the use of halibut snaps and has personally sold halibut snaps to halibut fishermen, that exhibit 1 is a

representative sample of the imported merchandise, differing only in the coating—the imported article being hot zinc plated whereas the sample is galvanized, and that in all other respects exhibit 1 is a representative sample of a long-line halibut snap described in entry 123207 which was sold by Summerfield Manufacturing to Seattle Marine.

It was brought out in the witness' testimony that the purpose of a halibut snap-on, as the witness called it, is to fasten the gangens onto the ground line. A gangens is a length of rope measuring between 36 and 60 inches in length having a loop or eye at either end, with a fish hook attached at one end and a halibut snap at the other end. In a fishing operation a ground line, measuring about 1800 feet long, is paid out over the side of a boat and a gangens is fastened onto the line by means of the halibut snap at intervals of 80 to 120 gangens per line.

According to Mr. Packard, who has been with Seattle Marine for 32 years both in his present position and as a shipping and sales clerk, halibut snaps are used only in the commercial fishing industry, and are referred to by commercial fishermen as "snap–ons" or "halibut snap-ons". Mr. Packard was of the opinion that the term "fishing tackle" referred to sporting goods such as rods, reels, and fishhooks used in sport fishing. He said commercial fishermen refer to their equipment as fishing "gear" and not as "fishing tackle"

Mr. Packard's testimony relative to the term "fishing tackle" was essentially corroborated by the testimony of Luhr Jensen, chairman of Luhr Jensen, Inc. of Hood River, Oregon, and president of Luhr Jensen and Sons, Ltd. of Vancouver, B.C., Canada. Luhr Jensen, Inc., manufactures fishing tackle and commercial fishing gear. Mr. Jensen stated that his commercial fishing business approaches a half million dollars. In his opinion halibut snaps or gear are used in commercial fishing only, and he had never heard commercial fishermen refer to their equipment as fishing tackle. Commercial fishermen refer to it as fishing gear or terminal gear.

It was brought out in the testimony of Mr. Jensen that halibut snaps were developed primarily as a safety feature, and also as a faster method of shooting the line over the stern of a boat and retrieving it. Originally, the traditional method of attaching the gangens to the line was by tying it onto the ground line. However, as the line was retrieved, fishermen risked being hooked in the face or clothing as they were untying the gangens from the line. Halibut snaps provide a safer method by eliminating the untying step.

The testimony of James Armstrong, manager of John Redden Net Company of Bellingham, Washington, relative to nomenclature, is to the same effect. His company handles all types of commercial

fishing gear, including nets, trolling gear, halibut gear, crab gear, and any type of fish gear used by commercial fishermen. He also stated that the term "fishing tackle" such as rods, reels, hooks, lines, and leaders are used by sport fishermen.

Not to the same effect, on the matter of nomenclature, however, is the testimony of William E. Smith, owner of a company carrying his name that manufactures both commercial and sport fishing equipment. Mr. Smith testified that he has traveled throughout the United States, Europe and South America, sold commercial fishing equipment all over the United States, attended commercial fishing shows around the world, and has designed halibut snaps. He testified that halibut snaps are not limited to commercial fishing use, but commercial fishing is their primary use, and they are known only by that name on the west coast. Halibut snaps can be used for almost any species of fish. As to the nomenclature "fishing tackle", which he regarded as being a subjective term, and "terminal gear", Mr. Smith testified (R. 64–65) that the terms "fishing tackle" and "terminal gear" were basically synonymous. He said that a gangen is called a snood on the east coast, and that he called halibut snaps "snap-on connectors". In his opinion an angler is a sport fisherman. On cross-examination he admitted that he would refer to plaintiff's exhibit 1 as "terminal gear", and that it would be difficult to characterize it as "fishing tackle" (R. 74).

During the trial attention was called to definitions of the word "clasp", among other things. Mr. Packard thought that a halibut snap could be a clasp. Mr. Jensen said he would consider a halibut snap to be a type of clasp for clasping the gangens onto the ground line. And Mr. Smith agreed that he would have to call it a clasp under Webster's definition that a clasp is a releasable catch for holding two or more objects together.

Plaintiff argues that the imported merchandise is a clasp because it fastens the gangens to the ground line and, therefore, should be classified under the *eo nomine* provision therefor in item 745.68 which, plaintiff asserts, embraces all forms of the article. Plaintiff further argues that the imported merchandise is excluded from classification under item 731.60 because the halibut snap is *commercial fishing equipment* and, as such, does not come within the ambit of the term "fishing tackle" which is limited to equipment used in sport fishing.

Defendant argues that an *eo nomine* designation does not include all forms of an article where Congress intended otherwise, as it feels is the case with respect to all forms of fishing tackle inclusive of the subject merchandise. Defendant further argues that the term "fishing tackle" in item 731.60 is inclusive of articles used in fishing without regard to use in commercial or sport fishing.

357-931 O - 81 - 4

Plaintiff's exhibit 4, admitted into evidence, graphically shows how the halibut snap is clasped or fastened on to the ground line and the gangen.

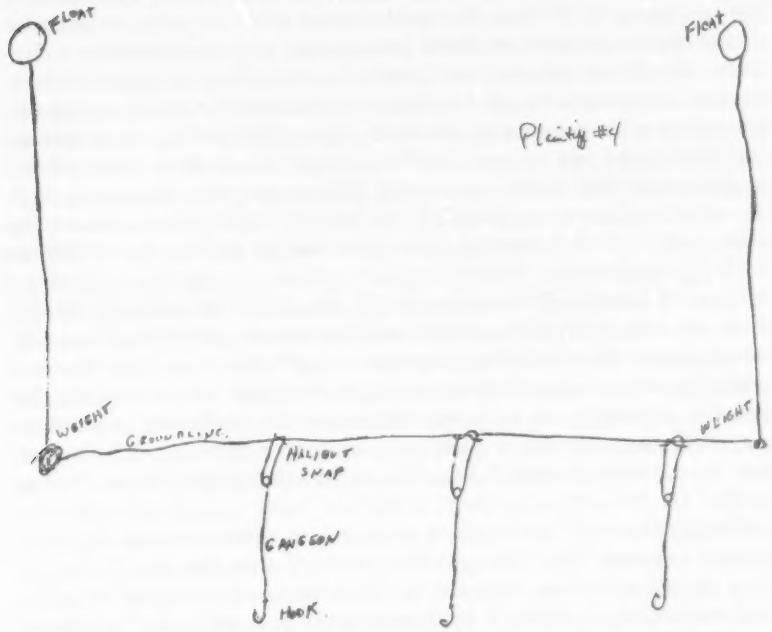

The court agrees with the plaintiff. In *Fenton* v. *United States*, 1 Ct. Cust. Appls. 529, 532, T.D. 31546 (1911), which involved imported pieces of cork used in the manufacture of fishing floats, the Court of Customs Appeals held that said pieces of cork could not be regarded as "fishing tackle" in the unfinished state in which they were imported, and were properly classified as manufactures of cork. The court interpreted the statute [paragraph 165 of the Tariff Act of 1909] to use the words "fishing tackle" in the sense of "an angler's outfit; angling gear; the hooks, lines, rods, and other implements of the art of fishing" as defined in *The Century Dictionary*.[1] An "angler" is one who fishes with an "angle", i.e., a hook (*Webster's New International Dictionary*, 1953).

The concept of "fishing tackle" in the *Fenton* case was followed in *International Distributors, Inc.* v. *United States*, 57 Cust. Ct. 369, 372 C.D. 2822 (1966), where the court held that the term "fishing

[1] The revisers of the dictionary transferred the phrase "fishing tackle" and placed it wunder theord "tackle" as "apparatus for fishing (fishing tackle)." See *The New Century Dictionary*, page 1934 (1946).

tackle" means equipment used by "anglers", those who fish with a hook and line for diversion and not the equipment used in net fishing, primarily commercial. The opinion points out that "the Summary of Tariff Information (1929), schedule 3, page 738, under the heading 'Fishing Tackle' says: 'The fishing tackle covered by this paragraph is used principally by sportsman. * * *' "

In *Manton Cork Corp.* v. *United States*, 65 Cust. Ct. 241, C.D. 4084 (1970), Judge Re speaking for the court continued to adhere to the distinction between sport fishing and commercial fishing.

All witnesses agreed that the purpose of the halibut snaps was to snap or fasten the gangens onto the ground line. Witness Packard said in his opinion a halibut snap met the definition of a "clasp" defined in the *Random House Dictionary of the English Language*, The Unabridged Edition (1966) as: "a device, usually of metal, for fastening together two or more things or parts of the same thing. * * *"

Mr. Jensen agreed with the definition in *Funk and Wagnalls New Standard Dictionary* (1937) of a "clasp" as: "a fastening by which things or parts of a thing are bound or held together", and he considered a halibut snap to be a clasp used to clasp the gangens onto the ground line.

Mr. Armstrong agreed with the testimony of witnesses Packard and Jensen with respect to clasps.

Mr. Smith said a halibut snap is a fastener within the definition of a "clasp" in *Webster's Third New International Dictionary* (1961): "a releasable catch for holding together two or more objects * * * or complimentary parts of something.* * *"

The terms "clasps" and "snap fasteners" as used in item 745.68 of the Tariff Schedules of the United States are *eo nomine* provisions. The Court of Customs Appeals in construing the terms "snap fasteners" and "clasps" in paragraph 348 of the Tariff Act of 1922 (which language is substantially the same as that in item 745.68), held them to be *eo nomine* provisions. *United States* v. *Murphy & Co.*, 13 Ct. Cust. Appls. 456, T.D. 41348 (1926). These terms in item 745.68 are construed to be *eo nomine* provisions.

The court concludes that the term "fishing tackle" in item 731.60 is limited to implements and equipment used in fishing for sport and does not include halibut snaps. Halibut snaps are "clasps" or "snap fasteners" described as "fishing gear" or "terminal gear" used for commercial fishing, which should be classified under item 745.68.

Judgment will be entered herein accordingly.

(Slip Op. 81–104)

CARLISLE TIRE AND RUBBER COMPANY, PLAINTIFF *v.* UNITED STATES, DEFENDANT

Before MALETZ, *Judge.*

Court No. 79–3–00423

Memorandum and Order

(Dated November 17, 1981)

Eugene L. Stewart and *Daniel G. Rooney* for the plaintiff.

J. Paul McGrath, Assistant Attorney General; *David M. Cohen*, Director, Commercial Litigation Branch (*Sheila N. Ziff* on the brief), for the defendant.

Lauren R. Howard; Collier, Shannon, Rill & Scott of counsel; for amicus curiae Bicycle Manufacturers Association of America, Inc.

MALETZ, *Judge:* Plaintiff, a domestic manufacturer of bicycle tires and tubes, challenged a negative countervailing duty determination published by the Secretary of the Treasury on January 8, 1979 involving bicycle tires and tubes from Taiwan, 44 F.R. 1815. In substance, the Secretary found that while Taiwanese bicycle tire and tube manufacturers received benefits from the Government of Taiwan, the amounts were *de minimis* and therefore not countervailable.

On June 18, 1981, this court denied the parties' cross-motions for summary judgment. The court, in addition, vacated the Secretary's negative countervailing duty determination; stayed the action; and remanded it to the Secretary of Commerce (to whom the functions of the Secretary of the Treasury had been transferred) with directions to make and submit to the court within 120 days a redetermination. *Carlisle Tire and Rubber Company* v. *United States*, 1 CIT—, 517 F. Supp. 704 (1981).[1]

In compliance with the court's order of June 18, 1981, the Secretary, on October 23, 1981, made and submitted to the court a redetermination that bicycle tires and tubes manufactured by the Taiwanese firm of Cheng Sin received bounties or grants in the net amount of 0.893 percent ad valorem. 46 F.R. 53201.

Subsequently, on November 16, 1981, plaintiff advised the court that it acquiesces in this redetermination.

Given these considerations, the court hereby affirms the results of this redetermination and directs the Secretary of Commerce to issue a countervailing duty order with respect to bicycle tires and tubes manufactured by Cheng Sin.

[1] In its opinion, the court observed that while it could decide *de novo* the issues presented, a remand would still be appropriate on the basis that a new investigation may lead to a countervailing duty redetermination with which plaintiff agrees, thereby obviating the need for a trial. 517 F. Supp. at 709. As indicated here, this is precisely what occurred.

best copy available

(Slip Op. 81–105)

COMMITTEE TO PRESERVE AMERICAN COLOR TELEVISION (a.k.a. COMPACT) AND IMPORTS COMMITTEE, TUBE DIVISION, ELECTRONIC INDUSTRIES ASSOCIATION, PLAINTIFFS *v.* UNITED STATES, DEFENDANT

Before MALETZ, *Judge.*

Court No. 81–3–00258

On Plaintiffs' Motion for Partial Summary Judgment and Defendant's Cross-Motion for Partial Summary Judgment

[Plaintiffs' motion denied and defendant's cross-motion granted.]

(Decided November 18, 1981)

Collier, Shannon, Rill & Scott (*Paul D. Cullen* and *Robert L. Meuser* on the briefs) for the plaintiffs.

J. Paul McGrath, Assistant Attorney General (*David M. Cohen*, Director Commercial Litigation Branch, on the briefs), for the defendant.

MALETZ, *Judge:* Plaintiffs, representing members of the United States television industry and its workers, challenge as unlawful certain settlement agreements into which the United States had entered on April 28, 1980 with various importers of television sets from Japan. As a first cause of action, the complaint alleges that the settlement was not authorized by statute. Alternatively, as a second and third cause of action, the complaint alleges that even assuming the existence of statutory authority for the settlement, the Government officials who recommended and determined that the claims should be settled acted arbitrarily, capriciously, in bad faith and unlawfully. It is undisputed that by virtue of 28 U.S.C. § 1581(i)—which was provided for by the Customs Courts Act of 1980 (94 Stat. 1729)—this court has jurisdiction to entertain the action.

Plaintiffs have moved for partial summary judgment on their first cause of action and defendant has cross-moved for partial summary judgment on that cause of action.

The case arises as follows: On March 10, 1971, the Secretary of the Treasury issued a finding of dumping of television sets from Japan, thereby making such sets subject to antidumping duties.[1] T.D. 71–76, 36 Fed. Reg. 4597 (1971). From the date of this finding through 1979, most of these duties were not collected. On March 28, 1980, the Secretary of Commerce[2] announced an administrative review of the dumping finding (45 Fed. Reg. 20511), as required by

[1] The Secretary of the Treasury's dumping finding was made pursuant to section 201(a) of the Antidumping Act of 1921, as amended (19 U.S.C. § 160(a)), an enactment which was repealed by the Trade Agreements Act of 1979, Pub. L. No. 96-39, Title I, § 106(a), 93 Stat. 193. However, pursuant to section 105(a) of the Trade Agreements Act of 1979, this dumping finding remained in effect.

[2] The Secretary of the Treasury's responsibility to administer antidumping matters has been transferred to the Secretary of Commerce by Reorg. Plan No. 3 of 1979, § 5(a) (1) (C), 44 Fed. Reg. 69273 (1979).

section 751 of the Tariff Act of 1930, as added by the Trade Agreements Act of 1979 (19 U.S.C. §1675).[3] On April 28, 1980, prior to to the completion of this administrative review, the Secretary of Commerce settled all claims for antidumping duties arising from entries of the sets from July 1, 1973 to March 31, 1979. Plaintiffs then filed this action challenging the lawfulness of this settlement.

We now consider plaintiffs' motion for partial summary judgment on their first cause of action.[4] Specifically, plaintiffs contend that the settlement is not authorized by section 617 of the Tariff Act of 1930, as amended (19 U.S.C. §1617) and is therefore *ultra vires*, illegal and void. Section 617 reads as follows:

> Upon a report by a customs officer, United States attorney, or any special attorney, having charge of *any claim arising under the customs laws*, showing the facts upon which such claim is based, the probabilities of a recovery and the terms upon which the same may be compromised, the Secretary of the Treasury is authorized to compromise such claim, if such action shall be recommended by the General Counsel for the Department of the Treasury. [Emphasis added.][5]

Thus section 617, by its terms, authorizes the relevant Government officials to compromise "any claim arising under the customs laws. * * *" There is no doubt that a claim for dumping duties is a "claim arising under the customs laws." And since the agreements at issue compromised claims for dumping duties, it is clear that the plain language of section 617 authorized the Secretary of Commerce to enter into the agreements.[6]

Notwithstanding this plain language plaintiffs argue that the

---

[3] Section 751 requires the Secretary to conduct a periodic review and determination of antidumping duties.

[4] Prior to the April 28, 1980 settlement agreements, plaintiffs herein had filed a civil action in the U.S. District Court for the District of Columbia challenging the alleged protracted refusal of the Government to enforce the dumping finding of March 10, 1971. *COMPACT, et al.* v. *Blumenthal*, C.A. 79-1207 (D.D.C. 1979), *appeal pending, sub. nom., COMPACT, et al.* v. *Miller*, No. 79-1948 (D.C. Cir.). The District Court dismissed the action for lack of jurisdiction. At the time the April 28, 1980 settlement agreements were executed plaintiffs' case was pending before the U.S. Court of Appeals for the District of Columbia Circuit on the jurisdictional issue presented by the District Court's dismissal of the action. On May 9, 1980 the Court of Appeals enjoined the implementation of the settlement agreements pending appeal. After enactment on October 10, 1980 of the Customs Courts Act of 1980, the Court of Appeals, on February 5, 1981, granted plaintiffs' motion to stay proceedings pending the filing of a new complaint in this court and a determination by this court of its jurisdiction over the controversy.

Previously in the related case of *Zenith Radio Corp.* v. *United States* in this court, the court issued a preliminary injunction restraining the implementation of the April 28, 1980 settlement agreements on the ground that *Zenith* had made out a substantial case on the merits on its alternative second cause of action alleging that Government officials in negotiating and executing the agreements acted arbitrarily and in bad faith. See *Zenith Radio Corp.* v. *United States*, 1 CIT—, 505 F. Supp. 216 (1980).

[5] The Secretary of the Treasury's functions under section 617 have been transferred to the Secretary of Commerce, insofar as those functions relate to the settlement of claims for antidumping duties. Reorg. Plan No. 3 of 1979, *supra*, §5(a)(1)(G).

[6] In the related *Zenith* case, plaintiff moved for partial summary judgment on its first cause of action contending, among other things, that section 617 only authorized the settlement of *liquidated claims* for antidumping duties. This court rejected that contention holding that the word "claim" as used in section 617 is a broad comprehensive word which covers both liquidated and unliquidated claims. *Zenith Radio Corp.* v. *United States*, 1 CIT—, 509 F. Supp. 1282 (1981).

authority to compromise "claims" contained in section 617 is limited to the authority to compromise claims for fines penalties and forfeitures and that since antidumping duties are not penal in nature, they may not be compromised. More particularly, plaintiffs contend that the scope of the authority of section 617 has been obscured by various recodifications of that provision since its first enactment in 1922. According to plaintiffs, while the language of section 617 is broad, a reading of that provision in its original setting establishes that it was intended only to authorize the compromise of claims for fines, penalties and forfeitures.

Continuing, plaintiffs point out that section 617 of the Tariff Act of 1922, 42 Stat. 987, was preceded and followed by sections 616 and 618 which dealt exclusively with the remission and mitigation of fines, penalties and forfeitures. Section 616, as it appeared in the Tariff Act of 1922, prohibited an officer of the United States from compromising any claim of the United States under the customs laws for any fine, penalty or forfeiture. That section contained a proviso, however, "which specified that the Secretary of the Treasury shall have the power to remit or mitigate any such fine, penalty or forfeiture or to compromise the same *in the manner provided by law.*" [Emphasis added.]

Section 617 provided authority to the Secretary to compromise claims "under the customs laws." Finally, section 618 provided authority to the Secretary to remit or mitigate a fine, penalty or forfeiture [7]

Since section 616 states that the Secretary may remit, mitigate or

---

[7] Sections 616, 617 and 618 as they appeared in the Tariff Act of 1922 (42 Stat. 987) provided:

SEC. 616. COMPROMISE OF CLAIMS.—It shall not be lawful for any officer of the United States to compromise or abate any claim of the United States arising under the customs laws for any fine, penalty, or forfeiture, and any such officer who compromises or abates any such claim or attempts to make such compromise or abatement, or in any manner relieves or attempts to relieve any persons, vessel, vehicle, merchandise, or baggage from any such fine, penalty, or forfeiture shall be guilty of a felony and upon conviction thereof shall be punished by a fine of not more than $5,000 or by imprisonment for a term of not exceeding two years: *Provided*, That the Secretary of the Treasury shall have power to remit or mitigate any such fine, penalty, or forfeiture, or to compromise the same in the manner provided by law.

SEC. 617. SAME.—Upon a report by a collector, district attorney, or any special attorney or agent, having charge of any claim arising under the customs laws, showing the facts upon which such claim is based, the probabilities of a recovery and the terms upon which the same may be compromised, the Secretary of the Treasury is hereby authorized to compromise such claim, if such action shall be recommended by the Solicitor of the Treasury.

SEC. 618. REMISSION OR MITIGATION OF PENALTIES.—Whenever any person interested in any vessel, vehicle, merchandise, or baggage seized under the provisions of this Act, or who has incurred, or is alleged to have incurred, any fine or penalty thereunder, files with the Secretary of the Treasury if under the customs laws, and with the Secretary of Commerce if under the navigation laws, before the sale of such vessel, vehicle, merchandise, or baggage a petition for the remission or mitigation of such fine, penalty, or forfeiture, the Secretary of the Treasury, or the Secretary of Commerce, if he finds that such fine, penalty, or forfeiture was incurred without willful negligence or without any intention on the part of the petitioner to defraud the revenue or to violate the law, or finds the existence of such mitigating circumstances as to justify the remission or mitigation of such fine, penalty, or forfeiture, may remit or mitigate the same upon such terms and conditions as he deems reasonable and just, or order discontinuance of any prosecution relating thereto. In order to enable him to ascertain the facts, the Secretary of the Treasury may issue a commission to any special agent, collector, member of the Board of United States General Appraisers, or United States commissioner, to take testimony upon such petition: *Provided*, That nothing in this section shall be construed to deprive any person of an award of compensation made before the filing of such petition.

In 1930, these three sections were recodified as sections 616–618 of the Tariff Act of 1930, 46 Stat. 757. In 1948, section 616 was repealed; however, the substance of that provision is contained in 18 U.S.C. § 1915, 62 Stat. 793. The final amendment to section 617 occurred in 1970, substituting a reference to a customs officer for a reference to a collector. 84 Stat. 291.

compromise claims for fines, penalties and forfeitures "in the manner provided by law," and since section 618 provided authority to remit or mitigate fines, penalties or forfeitures, plaintiffs argue that it necessarily follows that the authority to compromise "claims" contained in section 617 is limited to the compromise of those claims referred to in section 616, *i.e.*, claims for fines, penalties or forfeitures. In other words, plaintiffs' contention is that the language of section 617 is inextricably linked to the language of section 616 which is clearly limited in its scope to the remission, mitigation and compromise of fines, penalties and forfeitures.

But this contention is not supported by the language or the historical context of the sections or by their contemporaneous administrative construction.

Sections 616 and 617 were enacted into law at the same time in 1922 by the 67th Congress. In section 616, Congress utilized the phrase "claim of the United States arising under the customs laws *for any fine, penalty or forfeiture.*" [Emphasis added.] In contrast, in section 617, the same Congress utilized the phrase "any claim arising under the customs laws" and omitted the phrase "for any fine, penalty or forfeiture." If the same Congress which limited section 616 to claims for fines, penalties and forfeitures had wished to so limit section 617, it seems clear that Congress would have included the same limiting language in both sections 616 and 617. Considering that the same Congress enacted both sections and that that Congress limited section 616 by the use of a particular phrase, the failure to include that same phrase in section 617 can only mean that section 617, unlike section 616, is not limited in scope.

Moreover, plaintiffs' contention concerning the link between sections 616, 617 and 618 depends solely upon the premise that those sections possessed a common origin in the Tariff Act of 1922. However, this premise is incorrect. The fact is that sections 616 and 618 originated in sections 17, 18, 19 and 20 of the Act of June 22, 1874, 18 Stat. 189. [8] On the other hand, section 617 possessed no apparent predecessor prior to the Tariff Act of 1922.

[8] Those sections provided:

SECTION 17. That whenever, for an alleged violation of the customs revenue laws, any person who shall be charged with having incurred any fine, penalty, forfeiture, or disability other than imprisonment, or shall be interested in any vessel or merchandise seized or subject to seizure, when the appraised value of such vessel or merchandise is not less than one thousand dollars, shall present his petition to the judge, of the district in which the alleged violation occurred, or in which the property is situated, setting forth, truly and particularly, the facts and circumstances of the case, and praying for relief, such judge shall if the case, in his judgment, requires, proceed to inquire, in a summary manner into the circumstances of the case, at such reasonable time as may be fixed by him for that purpose, of which the district attorney and the collector shall be notified by the petitioner, in order that they may attend and show cause why the petition should be refused.

SECTION 18. That the summary investigation hereby provided for may be held before the judge to whom the petition is presented, or, if he shall so direct, before any United States commissioner for such district, and the facts appearing thereon shall be stated and annexed to the petition, and, together with a certified copy of the evidence, transmitted to the Secretary of the Treasury, who shall thereupon have power to mitigate of remit such fine, penalty, or forfeiture, or remove such disability, or any part thereof,

(Continued)

This conclusion that sections 17, 18, 19 and 20 were the predecessors of sections 616 and 618 is demonstrated by a simple comparison of those sections with the terms of sections 616 and 618. Thus a comparison of section 19 of the 1874 Act with section 616 leaves no doubt that section 19 was the predecessor of section 616. Except for stylistic differences and an alteration of the penalty imposed by each section, the terms of the two sections are identical.

A similar comparison of sections 17, 18 and 20 shows that these sections were the predecessors of section 618, not section 617. Section 17 authorized a party to file a petition for the mitigation or remission of a fine, penalty or forfeiture with a district judge. Pursuant to the same section, the judge or a United States commissioner was to conduct a summary inquiry into the facts. Pursuant to section 18, the report of the judge or commissioner was to be forwarded to the Secretary of the Treasury.

At the same time, section 20 required the relevant district attorney and collector of customs to forward information in their possession concerning the petition to the Secretary.

Upon receipt of the report and the information section 18 authorized the Secretary to "mitigate or remit" the fine, penalty or forfeiture if, in the Secretary's opinion, the fine, penalty or forfeiture had been incurred "without willful negligence or intention of fraud."

It is clear from this brief review of sections 17, 18 and 20 that the sections did not refer to the authority to "compromise" claims as does section 617.

In addition, it is clear that section 18 was the most important section in that it contained the relevant grant of authority. Sections 17 and 20 merely established a procedure for the exercise of that authority.

Moreover, a comparison of section 18 and section 618 leaves no doubt but that the former is the predecessor of the latter. The operative language of the two sections is virtually identical.

In short, the only real change made in sections 17, 18 and 20 by

---

(Continued)

if, in his opinion, the same shall have been incurred without willful negligence or any intention of fraud in the person or persons incurring the same, and to direct the prosecution, if any shall have been instituted for the recovery thereof, to cease and be discontinued upon such terms or conditions as he may deem reasonable and just.

SECTION 19. That it shall not be lawful for any officer or officers of the United States to compromise or abate any claim of the United States arising under the customs laws, for any fine, penalty, or forfeiture incurred by a violation thereof; and any officer or person who shall so compromise or abate any such claim, or attempt to make such compromise or abatement, or in any manner relieve or attempt to relieve from such fine, penalty, or forfeiture, shall be deemed guilty of a felony, and, on conviction thereof, shall suffer imprisonment not exceeding ten years, and be fined not exceeding ten thousand dollars: *provided, however*, that the Secretary of the Treasury shall have power to remit any fines, penalties, or forfeitures, or to compromise the same, in accordance with existing law.

SECTION 20. That whenever any application shall be made to the Secretary of the Treasury for the mitigation or remission of any fine, penalty, or forfeiture, or the refund of any duties, in case the amount involved is not less than one thousand dollars, the applicant shall notify the district attorney and the collector of customs of the district in which the duties, fine, penalty, or forfeiture accrued; and it shall be the duty of such collector and district attorney to furnish to the Secretary of the Treasury all practicable information necessary to enable him to protect the interests of the United States.

the Tariff Act of 1922 was the elimination of the procedural requirement involving a judicial inquiry into the facts. The decision which the Secretary was authorized to render was nearly identical in both statutes.

In these circumstances, it is apparent that sections 17, 18, 19 and 20 were the predecessors of sections 616 and 618 and not as plaintiffs state, section 617. Sections 17, 18, 19 and 20 were not preceded, followed or separated by a provision even similar to section 617 in the Act of June 22, 1874. Thus, the juxtaposition of sections 616, 617 and 618 in the Tariff Act of 1922 in no way indicates that section 617 was inextricably linked with sections 616 and 618.

This conclusion is further supported by the historical context of section 617. At the time section 617 was enacted into law, R.S. 3469 was in effect. That statute provided:

> SEC. 3469. Upon a report by a district attorney, or any special attorney or agent having charge of any claim in favor of the United States, showing in detail the condition of such claim, and the terms upon which the same may be compromised, and recommending that it be compromised upon the terms so offered, and upon the recommendation of the Solicitor of the Treasury, the Secretary of the Treasury is authorized to compromise such claim accordingly. But the provisions of this section shall not apply to any claim arising under the postal laws.

With respect to R.S. 3469, various Attorneys General had expressed the opinion that that provision authorized the Secretary of the Treasury to compromise claims for fines, penalties and forfeitures if the decision to compromise was based solely upon collectibility and not hardship. E.g., 16 Op. Att'y Gen. 259 (1879); 29 Op. Att'y Gen. 149, 155 (1911); 36 Op. Att'y Gen. 40 (1929).[9] Indeed, in *United States* v. *Richardson*, 9 Fed. 804 (D. Mass. 1882), the court noted, without deciding the matter, that the Secretary of the Treasury had in 1872 utilized the authority contained in R.S. 3469 to compromise claims for fines, penalties and forfeitures.

R.S. 3469 was in effect before and after the Tariff Act of 1922. In fact, R.S. 3469 became 31 U.S.C. § 194 (1976) and remained in effect until 1978 when it was repealed by the Bankruptcy Reform Act. 92 Stat. 2680.

Given the fact that R.S. 3469 was in effect prior and subsequent to the Tariff Act of 1922 and the fact that R.S. 3469 had been utilized to compromise claims for fines, penalties and forfeitures arising under the customs laws, it is evident that the phrase "in the manner provided

---

[9] In contrast, the Attorneys General also concluded that in cases where considerations of hardship were involved, a compromise of claims for fines, penalties and forfeitures was not permissible under R.S. 3469 but could be resolved by the Secretary's utilization of his power to "remit or mitigate." *Ibid.*

by law" which is contained in the proviso in section 616[10] need not and does not refer only to the authority to compromise claims contained in section 617. Indeed, the phrase "in the manner provided by law" contained in section 616, when it refers to the authority to compromise, does not refer solely to section 617. The phrase, as it applies to compromise authority, could and did apply equally to either R.S. 3469 or section 617 or both.

There is the futher consideration that in addition to claims for fines, penalties and forfeitures, R.S. 3469 authorized the Secretary of the Treasury to compromise claims in favor of the United States for customs duties provided that the conditions specified in that section were followed. See *United States* v. *Richardson*, *supra*.

R.S. 3469, as previously indicated, remained in effect until 1978 when it was repealed by the Bankruptcy Reform Act. As explained by the Report of the House and Senate Committees on the Judiciary, the purpose of the repealing provision was to "repeal deadwood." H.R. Rep. No. 95–595, 95th Cong., 1st Sess. 456 (1977); S. Rep. No. 95–989, 95th Cong., 2d Sess. 164 (1978). When it is considered that R.S. 3469 provided authority to the Secretary to compromise claims in favor of the United States for customs duties and that R.S. 3469 was repealed as "deadwood," it would seem inconceivable that Congress intended thereby to limit the Secretary's authority under section 617 to the authority to compromise only claims for fines, penalties and forfeitures. Rather, the repeal of R.S. 3469 as "deadwood" would seem recognition by Congress that section 617 already provided broad authority for the Secretary to compromise "any claims under the customs laws and that to that extent R.S. 3469 was therefore redundant.

Plaintiffs further rely on the Report of the Committee on Ways and Means of the House of Representatives on the bill which became the Tariff Act of 1922. That Report, which refers in general terms to the portion of the bill, Part V, in which sections 616, 617 and 618 appeared, states (H.R. Rep. No. 248, 67th Cong., 1st Sess. at 26 (1921)):

> The laws for the protection of the revenue and imposing fines, penalties and forfeitures for violation of the customs laws have been assembled in Part V. * * *

Plaintiffs contend that because this statement refers to laws imposing fines, penalties and forfeitures, it follows that section 617 applies only to claims for fines, penalties and forfeitures. This conclusion is not logical.

---

[10] As previously indicated, note 7, *supra*, the proviso contained in section 616 stated:
Provided. That the Secretary of the Treasury shall have power to remit or mitigate any such fine, penalt y or forfeiture, or to compromise the same in the manner provided by law.

The phrase contained in the House Report upon which plaintiffs rely also refers to the fact that Part V of the legislation contained laws for "the protection of the revenue" as well as laws which pertained to fines, penalties and forfeitures. The Report does not explain which sections contained in Part V of the legislation related to laws for the protection of the revenue and which sections related to the laws pertaining to fines, penalties and forfeitures. Thus, the Report could be interpreted as explaining that sections 616 and 618 relate to laws pertaining to fines, penalties and forfeitures and that section 617 relates to laws providing for the protection of the revenue.

In fact, this latter interpretation of the Report seems more reasonable than plaintiffs' interpretation. This conclusion results from the fact that the statutory language utilized in section 617 refers to any claim arising under the customs laws and does not contain language, as does section 616, which limits the section to claims for fines, penalties and forfeitures. This interpretation of the Report accords with the actual language of section 617 and gives meaning to the entire quoted portion of the Report, including the phrase "laws for the protection of the revenue," whereas plaintiffs' interpretation of the Report ignores that phrase entirely.

Plaintiffs next turn to the headings of section 616 and 617 and attempt to again conclude that these headings demonstrate the fact that the authority contained in section 617 is, contrary to its terms, limited to claims for fines, penalties and forfeitures.

Of course, the headings of statutes may be utilized to interpret a statute, if at all, only where the statute is ambiguous. E.g., *Russ* v. *Wilkens*, 624 F. 2d 914, 922 (9th Cir. 1980); *Motor Coach Industries, Inc.* v. *United States*, 536 F. 2d 930, 936 (Ct. Cl. 1976); *Tibke* v. *Immigration and Naturalization Service*, 335 F. 2d 42, 45 (2d Cir. 1964). However, section 617 is not ambiguous. Thus, no resort to the section headings is necessary.

In any event, plaintiffs' conclusion is without merit. The heading of section 616 reads "Compromise of Claims." The heading of section 617 reads "Same." Since section 616 is limited to claims for fines, penalties and forfeitures, plaintiffs conclude that the term "Claims," as utilized in the heading to section 616, must be interpreted as referring only to claims for fines, penalties and forfeitures. Plaintiffs then contend that, since the heading to section 617 reads "Same,' that heading must be interpreted in the same manner as the heading to section 616, *i.e.*, as if it referred only to claims for fines, penalties or forfeitures. Finally, plaintiffs state that the term "claim," as contained in the text of section 617, must be interpreted in the same manner as the heading.

Plaintiffs' interpretation is not reasonable. The heading of section

616 reads: "Compromise of Claims." The heading of section 617 reads "Same." Both headings thus refer to the generic term "claims" which is much broader than claims for fines, penalties and forfeitures. Accordingly, the headings reasonably interpreted mean that both sections 616 and 617 apply to the compromise of all types of claims unless the actual language of the section, as in the case of section 616, contains language which limits the term.

The conclusion that section 617 is not limited to the authority to compromise claims relating to fines, penalties and forfeitures is also supported by an opinion of the Attorney General. 35 Op. Att'y Gen. 15 (1925). In 1925, shortly after the enactment of the Tariff Act of 1922, the Secretary of the Treasury requested an opinion from the Attorney General as to the authority which could be delegated to the Director of Customs. In the course of his opinion, the Attorney General twice referred to sections 617 and 618. In the first reference, the Attorney General described the authority contained in those sections as follows (*id.* at 18):

> By section 617 the Secretary is authorized to compromise, under certain conditions, *any claim* arising under the customs law, if such action shall be recommended by the Solicitor of the Treasury, and by section 618 he is authorized to *remit or mitigate fines or penalties* upon such terms and conditions as he deems reasonable and just. [Emphasis added.]

In the second reference (*id.* at 21), the Attorney General noted:

> * * * I think the provisions of sections 616, 617, and 618 of the Tariff Act of September 21, 1922, relating to the *compromise of claims and the abatement of fines, penalties and forfeitures* require the personal action of the Secretary. [Emphasis added.]

This opinion of the Attorney General clearly shows that the nearly contemporaneous interpretation of the Tariff Act of 1922 was that section 617 was not limited to "abatement" of fines, penalties and forfeitures, but contained authority to compromise "all claims." [11]

Additionally, plaintiffs refer to the general principle of statutory construction that the courts will read the text of a statute in the light of its context and will interpret the text so as to carry out the legislative intent. In particular, plaintiffs rely on *Elizabeth Arden Sales Corporation* v. *Guy Blass Co.*, 150 F. 2d 988 (8th Cir. 1945). That case involved a treble damage action under sections 2 (d) and (e) of the Clayton Act as amended by the Robinson-Patman Act.

[11] Plaintiffs also contend that the use of section 617 to compromise claims for dumping duties is inconsistent with a longstanding administrative practice. Plaintiffs state that they have not been able to uncover a single instance during the six decades since enactment of section 617 where the Secretary of the Treasury asserted authority under that section to compromise anything except fines, penalties and forfeitures. In fact, very little recorded history of the use of the authority contained in section 617 is in existence. And even if such a practice did exist—which is questionable—at most it is entitled to considerable weight, but is scarcely dispositive.

Subsections (a), (b), (c), (d) and (f) of section 2 regulated a variety of acts and practices by any person "engaged in commerce." Subsection (e) did not contain this qualification, "engaged in commerce," and the defendant contended that section 2(e) was therefore unconstitutional because it represented an unlawful exercise of authority by the federal Government over intra-state commerce. The court decided that the words "engaged in commerce" should be read into subsection (e) in order to give that provision its intended meaning. 150 F. 2d at 992–993. According to the plaintiffs here, just as the court read the qualifying phrase "engaged in commerce" into the provision in question because it appeared in related provisions, so too this court should read the phrase "fines, penalties and forfeitures" into section 617. This interpretation, plaintiffs assert, will then harmonize the meaning of section 617 with its companion provisions in sections 616 and 618.

The difficulty though is that sections 616, 617 and 618 do not form a statutory whole in the same manner as subsections (a), (b), (c), (d) and (e) of the Robinson-Patman Act. Unlike those provisions, an interpretation of section 617, in accordance with its plain meaning, would not defeat the purpose of the entire statute nor would it defeat any legislative purpose. More importantly, had the court in *Elizabeth Arden* adopted the construction of the statute urged by defendant, it would have placed the constitutionality of that statute in doubt. Thus the court construed the enactment in accordance with the basic principle that if possible a statute should be so construed as to avoid a question as to its constitutionality.

Plaintiffs next argue that the execution of the settlement agreements violated the legally protected interests of the plaintiffs to an administrative determination of antidumping duties under section 751 of the Tariff Act of 1930, as added by the Trade Agreements Act of 1979 (19 U.S.C. § 1675) and thus deprived them of a property interest without a hearing in violation of the Due Process Clause.

In order to determine whether there has been a violation of the Due Process Clause, it is first necessary to determine whether a claimant has been deprived of a "property" interest. *Board of Regents* v. *Roth*, 408 U.S. 564 (1972); *Perry* v. *Sindermann*, 408 U.S. 593 (1972). This property interest must possess a source "outside" of the Constitution. *Ibid.*

In the *Zenith* case, this court held that section 617 and section 751 are separate and distinct statutes. *Zenith Radio Corp.* v. *United States*, 509 F. Supp. at 1287–1288. That being the case, any property interest which plaintiffs acquired under section 751 was subject to an exercise of the authority contained in section 617. That is to say that even assuming a property interest was acquired under section 751 it was a

contingent one since it remained subject to an exercise of the authority under section 617. Since section 617, by its terms, does not require the Secretary to grant a hearing to plaintiffs prior to an exercise of the authority contained in that section, it follows that any property interest which plaintiffs acquired under section 751 was, by its nature subject to determination without hearing by means of exercise of the authority contained in section 617.

Finally, plaintiffs contend that the execution of the settlement agreements cannot be reconciled with the provisions of section 751 of the Tariff Act of 1930, as added by the Trade Agreements Act of 1979 (19 U.S.C. § 1675). A similar contention was rejected in *Zenith*, 509 F. Supp. at 1286–128 —and is rejected here. As the court stated in *Zenith*, *id.* at 1287, "no * * * repugnancy exists here [between sections 617 and 751] since the two provisions reflect different Congressional concerns and apply to different functions of the Secretary."

For the foregoing reasons, plaintiffs' motion for partial summary judgment on their first cause of action is denied and defendant's cross-motion on that cause of action is granted.

(Slip Op. 81–106)

NATIONAL LATEX PRODUCTS COMPANY, PLAINTIFF *v.* THE UNITED STATES, DEFENDANT

Before NEWMAN, Judge.

Court No. 81–7–00898

Memorandum and Order

[Defendant's motion for protective order granted.]

(Dated November 18, 1981)

Sharretts, Paley, Carter & Blauvelt, P.C. (*Gail T. Cumins*, Esq., of counsel) for the plaintiff.

J. Paul McGrath, Assistant Attorney General, *David M. Cohen*, Director, Commercial Litigation Branch, and *Velta A. Melnbrencis*, Esq., for the defendant.

NEWMAN, *Judge:* Defendant has moved for a protective order regarding documents numbered 8 (with attachments) and 12 contained in the administrative record filed with the Court in this action contesting the dismissal by the United States Department of Commerce of plaintiff's countervailing duty petition regarding toy balloons and playballs from Mexico.[1]

[1] No demand for any privileged documents has been made by plaintiff or any intervenor, and defendant 's motion has assertedly been made "in order to comport with the Court's procedural interpretation in "*Southwest Florida Winter Vegetable Growers Association* v. *United States*, 85 Cust. Ct. ——, C.R.D. 80–7 (1980)."

Defendant's motion is supported by an affidavit of Lionel H. Olmer, Under Secretary for International Trade, United States Department of Commerce,[2] claiming governmental privilege for documents numbered 8 and 12. These documents allegedly are intra-agency communications containing "legal and policy analyses and recommendations," the disclosure of which, in Mr. Olmer's opinion, "would seriously impede the free flow of essential advice and recommendations necessary for effective decision-making."

In opposition to defendant's motion, plaintiff maintains that the documents in question do not fall within the scope of the governmental privilege respecting intra-agency communications; and plaintiff further insists that its need for the documents in order to assert its claim outweighs any harm that would result to the Government's decision-making process if the documents were released.

The Court has determined that defendant's motion for a protective order should be granted.

The pertinent factual background follows:

On May 14, 1981 plaintiff filed a petition with Commerce under section 303 of the Tariff Act of 1930, as amended (19 U.S.C. § 1303), requesting that countervailing duties be imposed on the importation of toy balloons and playballs from Mexico. But plaintiff's petition did not allege nor furnish information respecting injury to an industry in the United States. In the Federal Register Notice of June 17, 1981 (46 FR 31698), Commerce dismissed plaintiff's petition predicated on the conclusion "that in this case an allegation of injury to the United States industry is a necessary component of the petition." Continuing, the June 17, 1981 Notice states:

> This conclusion is based on the decision by the United States Department of the Treasury in a 1978 case involving other Mexican duty-free products. In the August 28, 1978 notice of initiation of this case (43 FR 38482) Treasury stated:
>
> > The imported merchandise classifiable under item numbers 705.3000, 791.7820, and 791.7680 of the tariff schedules of the United States, annotated (TSUSA) are eligible for duty-free entry under the generalized system of preferences. In the event that it becomes necessary to refer this case to the U.S. International Trade Commission pursuant to section 303(a)(2), Tariff Act of 1930, as amended (19 U.S.C. 1303(a)(2)), there is evidence on record concerning injury, or likelihood of injury, to an industry in the United States with regard to these duty-free imports.

[2] Plaintiff has expressly declined to contest Mr. Olmer's authority to assert a claim of privilege on behalf of the Department of Commerce,and accordingly any issue as to thether the affidavit was submitted by the head of the agency is pretermitted. It has been noted, however, that in *Roses, Inc. v. United States*, 1 CIT—, Slip OP. 81-4 (1981), the requisite affidavit by the head of the agency having control of countervailing duty determinations was executed by Philip N. Klutznick, then Secretary of the Department of Commerce.

> In the absence of any subsequent action prior to this petition rendering the 1978 decision inapplicable to cases involving duty-free imports from Mexico, we have determined in this case that countervailing duties may not be imposed unless there is an affirmative determination concerning injury. Because of the absence of any allegation of injury, the petition, which is satisfactory otherwise, does not allege the elements necessary for the imposition of countervailing duties. We are dismissing the petition and terminating the proceeding without prejudice to the right of the petitioner to submit a revised petition that includes the necessary allegation and supporting information on injury.

It is plaintiff's position in this action that since Mexico is not a signatory of the General Agreements on Tariffs and Trade (GATT), and since the United States and Mexico have not entered into an agreement requiring that an injury determination be made for the United States to impose countervailing duties on duty-free Mexican imports, no allegation of injury was required in plaintiff's countervailing duty petition.[3] The Government's answer to the complaint concedes that Mexico is not a signatory to the GATT and that no commercial agreement exists between Mexico and the United States requiring an injury determination in this matter.

The two documents in question have been reviewed by the Court *in camera* and are found to be properly represented in defendant's moving papers and in Under Secretary Olmer's affidavit. It is well established that a qualified privilege of nondisclosure attaches to intra-agency documents reflecting advisory opinions, recommendations, and deliberations comprising part of the process by which Governmental decisions are formulated. See *EPA* v. *Mink*, 410 U.S. 73 (1973); *Roses, Inc.* v. *United States, et al.*, 1 CIT—, Slip Op. 81–4 (1981); *SCM Corp.* v. *United States* (*Brother International Corporation, Party-in-Interest*), 82 Cust. Ct. 351, C.R.D. 79–11, 473 F. Supp. 791 (1979); *Sprague Electric Company* v. *United States* (*Capar Components Corp., Party-in-Interest*), 81 Cust. Ct. 168, C.R.D. 78–18, 462 F. Supp. 966 (1978). Thus, in *Sprague* this Court commented (81 Cust. Ct., at 177):

> The ruling on defendant's motion respecting documents "a" through "g" would be apparent on the basis of what has been discussed thus far, but for one significant circumstance. The doctrine of executive privilege is not absolute, but is qualified. *Smith* v. *F.T.C.*, 403 F. Supp. at 1015; *Black* v. *Sheraton Corp. of America*, 371 F. Supp. at 100; *Kaiser Aluminum & Chemical Corp.* v. *United States*, 157 F. Supp. at 946. As stressed by the Court in *Black* (at 100):

---

[3] This issue is not before the Court at this juncture, and the present issue relates solely to disclosure.

> * * * Recognition of the claim [of executive privilege] requires a *delicate balancing of competing interests*, the public's interest in preserving confidentiality to promote open communication necessary for an orderly functioning of the government, and the individual's need for disclosure of particular information. *The question at the core of any claim of executive privilege is whether the damage resulting from disclosure outweighs the need for a just resolution of a legal dispute.* [Italics supplied.]

Again, in *Smith* v. *F.T.C.*, the court enunciated the concept of "balancing" as follows (403 F. Supp. at 1015):

> * * * While the exact showing necessary to surmount a governmental claim of privilege is unclear [footnote omitted], what is basically involved in each case is an *ad hoc* balancing of individual need for the materials against the harm resulting from any such disclosure. * * *

See also: *Nixon, supra; Sun Oil Co., supra; Union Oil Co., supra; Committee for Nuclear Responsibility, supra.*

We now consider the fundamental question of whether plaintiff has demonstrated a need for the disputed documents which outweighs the harm that disclosure may do to intra-governmental candor. A "delicate balancing of competing interests," of course, cannot be accomplished so as to achieve a result having the invariance of a precise mathematical equation.

Respecting plaintiff's need for the materials sought, plaintiff argues that it cannot prepare its case without knowing the reasons for dismissal of its petition, and that "the withheld documents will presumably shed additional light on the 'other bases' for dismissal".

To date, plaintiff has received copies of 30 of the 32 documents included in the certified index of the administrative record which formed the basis of the Government's decision. Relative to the two additional documents in question, the Court's *in camera* inspection reveals that these documents contain no reasons or explanation as to why plaintiff's petition should have been or was dismissed. While this Court is completely sympathetic with plaintiff's "predicament" due to defendant's failure to give explicit reasons for the asserted injury requirement, nevertheless the disclosure of documents 8 and 12 would not aid plaintiff in knowing why its petition was dismissed. Plaintiff has not advanced any other need for the two documents.

For the foregoing reasons, it is ordered that documents numbered 8 (with attachments) and 12 contained in the administrative record previously forward to the Clerk of the Court in connection with plaintiff's countervailing duty petition regarding toy balloons and playballs from Mexico are hereby recognized as privileged documents.

Accordingly, defendant's motion for a protective order is granted.

(Slip Op. 81–107)

JAMES J. BOYLE & CO. A/C NITTO KOHKI U.S.A. INC., PLAINTIFF *v.* UNITED STATES, DEFENDANT

Court No. 77–9–03236

Decision

BURDEN OF PROOF

An Export Value determined upon appraisal is presumed correct until it is disproven, and the alternatively proposed Export Value is proven by a preponderance of the evidence. 28 U.S.C. § 2635.

VALUATION—UNITED STATES VALUE

Merchandise cannot be appraised at a claimed United States Value, in the absence of proof that an Export Value did not exist. 19 U.S.C. § 1401(a)(2).

[Judgment for Defendant.]

(Dated November 18, 1981)

Glad, Tuttle & White, (*Edward N. Glad* at the trial and on the brief), for the plaintiff.

Thomas S. Martin, Acting Assistant Attorney General; *Joseph Liebman*, Attorney in Charge, International Trade Field Office, Commercial Litigation Branch (*Susan Cassell* at the trial; *John J. Mahon* on the brief), for the defendant.

WATSON, *Judge:* This action raises the question of what is the proper basis for determining the value for tariff purposes, of certain pneumatic hand-tools. Plaintiff, (Nitto Kohki, U.S.A.), a wholly-owned subsidiary of the tools' manufacturer (Nitto Kohki, Japan), was the sole importer of these items in 1972. Plaintiff contends that Customs erroneously computed the Export Value [1] of the goods in question; using the retail price minus a wholesaler's discount, instead of list prices on invoices supplied by plaintiff's parent company.

The essence of plaintiff's argument in support of calculating Export Value on the basis of the invoice prices, is that it is a selected purchaser at wholesale, who negotiated the invoice prices at arms-length in a bona fide transaction. This directly contradicts the finding upon appraisal that plaintiff was a selling agent for the parent company, Nitto Kohki, Japan.

There was no contractual agreement between Nitto Kohki, Japan, and the plaintiff, designating it as an "exclusive" or selected purchaser of the merchandise in question. This fact alone militates against an

[1] 19 U.S.C. 1401(b) defines Export Value of imported merchandise as:

> * * * the price, at the time of exportation to the United States of the merchandise undergoing appraisement, at which such or similar merchandise is freely sold or, in the absence of sales, offered for sale in the principal markets of the country of exportation, in the usual wholesale quantities and in the ordinary course of trade, for exportation to the United States, plus, when not included in such price, the cost of all containers and coverings of whatever nature and all other expenses incidental to placing the merchandise in condition, packed ready for shipment to the United States.

argument that there was such a relationship. *Majestic Electronics, Inc.*, v. *United States*, 84 Cust. Ct. 38, 48, C.D. 4839, 488 F. Supp. 897 (1980). Despite the lack of an agreement, plaintiff points to the absence of any restrictions placed on it by the parent company, in terms of who it could sell to and how it could conduct sales operations in the United States. These facts, viewed in the context of the record as a whole, do not preclude a determination that plaintiff was a sales agent for Nitto Kohki, Japan. It is undisputed that plaintiff imported only pneumatic hand-tools manufactured by Nitto Kohki, Japan. The record further indicates that plaintiff held itself out as a manufacturer of pneumatic hand-tools on its sales circulars. Plaintiff had no manufacturing capabilities in the United States during 1972. Its operations only entailed the warehousing, distribution and sale of tools manufactured by Nitto Kohki, Japan. Thus, the conclusion that plaintiff perceived, and in fact cultivated an impression of itself as an extension of Nitto Kohki, Japan, is amply supported by the record.

More importantly, of the six named directors and executive officers of Nitto Kohki, U.S.A., five held similar or identical positions in the parent corporation during 1972. Only one resided in the United States during 1972.

Therefore, plaintiff's corporate structure and the manner in which it conducted business during the period in question, support the determination that plaintiff was an agent of Nitto Kohki, Japan. *Robert E. Landweer & Co., Inc., a/c Robert Newton & Sons, Inc., et al.* v. *United States*, 63 Cust. Ct. 682, 689, A.R.D. 261 (1969).

Plaintiff's argument that listed invoice prices should be used to determine the export price, because they resulted from arms-length negotiations with Nitto Kohki, Japan is not borne out by the record. The evidence advanced as proof of negotiations consists of two price estimates and a telex [plaintiff's Exhibits 5–7]. Price estimate #P–425 dated January 28, 1972 provides higher prices for all of the merchandise in question, than estimate #P–466 dated February 25, 1972. A telex sent after both price estimates had been received by the plaintiff, reinstates the higher prices listed on price estimate #P–425 as the prices to be paid for the merchandise. However, the record is devoid of evidence that the plaintiff objected in any manner to the higher prices which were reinstated as the "formal quotation" for the tools.

The passive acceptance of the reinstatement of a higher price, *after* a cheaper price has been quoted, together with the absence of any clear indication at any time of what the plaintiff considered to be a fair price for the merchandise in question, flies in the face of any normal concept of negotiation. In light of this, the offer of proof

that a different pneumatic tool was offered at the same price to plaintiff and another importer, is to be given little weight.

It must also be considered that the officer negotiating prices on behalf of Nitto Kohki, Japan served simultaneously as a director on plaintiff's board. Mr. Shimokogawa, who represented plaintiff in these negotiations, was at the same time an officer of Nitto Kohki, Japan. This "* * * is inconsistent with the degree of independence which must exist between two companies whose conduct in price negotiations is to serve as the sole justification for concluding the price agreed upon fairly reflects the market value of the merchandise." *D.H. Baldwin Co. et al.* v. *United States*, 78 Cust. Ct. 164, 166–7, C.D. 4704, 432 F. Supp. 1351 (1977).

Thus, plaintiff has not proved by a preponderance of the evidence that it was a selected purchaser who negotiated at arms-length the invoice prices supplied by Nitto Kohki, Japan.

Plaintiff's alternative argument that "United States" Value is the proper basis for determining the value of the merchandise for tariff purposes, is deficient in one important respect.

Plaintiff does not address the issue of whether an Export Value as defined by 19 U.S.C. § 1401(c)[2] exists or not. It is well settled that in order to prove the United States' Value, the existence of an Export Value for such or similar merchandise must be negated. *Glenside Steel Company et al.* v. *United States*, 71 Cust. Ct. 23, 32, C.D. 4466, 364 F. Supp. 1398 (1973), *aff'd* 62 CCPA 1, C.A.D. 1133, 503 F. 2d 563 (1974).

Plaintiff contends that the normal course of dealing in the trade of importing pneumatic hand-tools, was for a selected purchaser's relationship to exist between Japanese manufacturers and American importers. The implication being that an Export Value could not be determined, because these relationships prevented plaintiff from ascertaining the prices at which the merchandise was offered for sale in Japan.

However, the testimony of plaintiff's own witnesses argues against such a conclusion. Mr. Oka who during the period in question was directing marketing and sales in the North Central States for plaintiff, testified that one American company imported from three Japanese manufacturers at the same time. Mr. Tomishima, at the time, an Assistant Export Manager for the plaintiff, gave contradictory

---

[2] 19 U.S.C. 1401(c) in pertinent part provides:

United States Value

(c) For the purposes of this section, the United States value of imported merchandise shall be the price, at the time of exportation to the United States of the merchandise undergoing appraisement, at which such or similar merchandise is freely sold or, in the absence of sales, offered for sale in the principal market of the United States for domestic consumption, packed ready for delivery, in the usual wholesale quantities and in the ordinary course of trade, with allowances made for—

* * * * * * *

testimony as to whether Japanese manufacturers of pneumatic tools dealt only with selected purchasers.

The weight of the testimony then, does not support an inference that the Export Value of the merchandise could not be determined, because of selected purchaser relationships between Japanese manufacturers and American importers. It follows that the presumption of correctness, which attaches to the finding that the merchandise had an Export Value must stand. 28 U.S.C. § 2635(a).[4]

For reasons discussed above, the appraised values are affirmed.

Judgement to enter accordingly.

---

[4] 28 U.S.C. § 2635 states the rule that:

Burden of proof; evidence of value

In any matter in the [Court of International Trade]:
(a) The decision of the Secretary of the Treasury, or his delegate, is presumed to be correct. The burden to prove otherwise shall rest upon the party challenging a decision.

* * * * * * *

Decisions of the United States Court of International Trade

Abstracts

Abstracted Protest Decisions

DEPARTMENT OF THE TREASURY, *November 23, 1981.*

The following abstracts of decisions of the United States Court of International Trade at New York are published for the information and guidance of officers of the Customs and others concerned. Although the decisions are not of sufficient general interest to print in full, the summary herein given will be of assistance to Customs officials in easily locating cases and tracing important facts.

WILLIAM VON RAAB,
Commissioner of Customs.

DECISION NUMBER	JUDGE & DATE OF DECISION	PLAINTIFF	COURT NO.	ASSESSED	HELD	BASIS	PORT OF ENTRY AND MERCHANDISE
				Par. or Item No. and Rate	Par. or Item No. and Rate		
P81/185	Watson, J. November 19, 1981	International Harvester Co.	79-8-01244	Item 664.06 5%	Items 664.05/807.00 5%, with duty-free allowance to American-made components; ordered entries be re-liquidated at appraised value less value of certain American-made components as shown on entry papers	Judgment on the pleadings	San Francisco Payloaders (models 510 and 515) consisting in part of American-made components

Abstracts

Abstracted Reappraisement Decisions

DECISION NUMBER	JUDGE & DATE OF DECISION	PLAINTIFF	COURT NO.	BASIS OF VALUATION	HELD VALUE	BASIS	PORT OF ENTRY AND MERCHANDISE
R81/407	Watson, J. November 16, 1981	Kayten Trading Corp. et al.	R63/10738, etc.	Export value	F.o.b. unit invoice prices plus 20% of difference between f.o.b. unit invoice prices and appraised values	Agreed statement of facts	Los Angeles Table cutlery and stainless steel flatware
R81/408	Watson, J. November 16, 1981	Kayten Trading Corp.	R65/7003, etc.	Export value	F.o.b. unit invoice prices plus 20% of difference between f.o.b. unit invoice prices and appraised values	Agreed statement of facts	New Bedford (Boston) Table cutlery and stainless steel flatware

DECISION NUMBER	JUDGE & DATE OF DECISION	PLAINTIFF	COURT NO.	BASIS OF VALUATION	HELD VALUE	BASIS	PORT OF ENTRY AND MERCHANDISE
R81/409	Watson, J. November 16, 1981	National Silver Co. et al.	R65/22647, etc.	Export value	F.o.b. unit invoice prices plus 20% of difference between f.o.b. unit invoice prices and appraised values	Agreed statement of facts	Los Angeles Table cutlery and stainless steel flatware
R81/410	Watson, J. November 16, 1981	National Silver Co.	R68/2085, etc.	Export value	F.o.b. unit invoice prices plus 20% of difference between f.o.b. unit invoice prices and appraised values	Agreed statement of facts	New Bedford (Boston) Table cutlery and stainless steel flatware
R81/411	Watson, J. November 16, 1981	National Silver Co.	R68/13735, etc.	Export value	F.o.b. unit invoice prices plus 20% of difference between f.o.b. unit invoice prices and appraised values	Agreed statement of facts	New Bedford (Boston) Stainless steel flatwarek
R81/412	Watson, J. November 16, 1981	National Silver Co.	R68/13737, etc.	Export value	F.o.b. unit invoice prices plus 20% of difference between f.o.b. unit invoice prices and appraised values	Agreed statement of facts	New Bedford (Boston) Stainless steel flatware
R81/413	Watson, J. November 17, 1981	American Thermo-Ware Co.	295995-A, etc.	Export value	F.o.b. unit invoice prices plus 20% of difference between f.o.b. unit invoice prices and appraised values	Agreed statement of facts	New York Binoculars

R81/414	Watson, J. November 17, 1981	Astra Trading Corp.	271028-A, etc.	Export value	F.o.b. unit invoice prices plus 20% of difference between f.o.b. unit invoice prices and appraised values	Agreed statement of facts	New York Bin oculars
R81/415	Watson, J. November 17, 1981	Astra Trading Corp.	277320-A, etc.	Export value	F.o.b. unit invoice prices plus 20% of difference between f.o.b. unit invoice prices and appraised values	Agreed statement of facts	New York Binoculars
R81/416	Watson, J. November 17, 1981	Astra Trading Corp.	282596-A, etc.	Export value	F.o.b. unit invoice prices plus 20% of difference between f.o.b. unit invoice prices and appraised values	Agreed statement of facts	New York Binoculars
R81/417	Watson, J. November 17, 1981	Imported Rug Associates, Ltd.	R62/12203, etc.	Export value	F.o.b. unit invoice prices plus 20% of difference between f.o.b. unit invoice prices and appraised values	Agreed statement of facts	New York Rugs
R81/418	Watson, J. November 17, 1981	Imported Rug Associates, Ltd.	R62/14474, etc.	Export value	F.o.b. unit invoice prices plus 20% of difference between f.o.b. unit invoice prices and appraised values	Agreed statement of facts	New York Rugs

DECISION NUMBER	JUDGE & DATE OF DECISION	PLAINTIFF	COURT NO.	BASIS OF VALUATION	HELD VALUE	BASIS	PORT OF ENTRY AND MERCHANDISE
R81/419	Watson, J. November 17, 1981	Imported Rug Associates, Ltd.	R63/5140, etc.	Export value	F.o.b. unit invoice prices plus 20% of difference between f.o.b. unit invoice prices and appraised values	Agreed statement of facts	New York Rugs
R81/420	Watson, J. November 17, 1981	Imported Rug Associates, Ltd.	R64/2648, etc.	Export value	F.o.b. unit invoice prices plus 20% of difference between f.o.b. unit invoice prices and appraised values	Agreed statement of facts	New York Rugs
R81/421	Watson, J. November 17, 1981	Imported Rug Associates, Ltd.	R64/20884, etc.	Export value	F.o.b. unit invoice prices plus 20% of difference between f.o.b. unit invoice prices and appraised values	Agreed statement of facts	New York Rugs
R81/422	Watson, J. November 17, 1981	Imported Rug Associates, Ltd.	R65/14104, etc.	Export value	F.o.b. unit invoice prices plus 20% of difference between f.o.b. unit invoice prices and appraised values	Agreed statement of facts	New York Rugs
R81/423	Watson, J. November 17, 1981	Imported Rug Associates, Ltd.	R67/9016, etc.	Export value	F.o.b. unit invoice prices plus 20% of difference between f.o.b. unit invoice prices and appraised values	Agreed statement of facts	New York Rugs

R81/424	Watson, J. November 19, 1981	Mitsui & Co. (USA), Inc.	79-8-01245	American selling price	$0.645 per lb., net, packed	Judgment on the pleadings	New Orleans Chemical product (Kane Ace B-22)
R81/425	Watson, J. November 19, 1981	Mitsui & Co. (USA), Inc.	79-8-01246	American selling price	$0.645 per lb., net, packed	Judgment on the pleadings	New Orleans Chemical product (Kane Ace B-18A-1, covered by entry 237079)
R81/426	Watson, J. November 19, 1981	Henry A. Wess, Inc.	R59/4413, etc.	Export value	Appraised unit values less 7.5%, net packed	Agreed statement of facts	Cincinnati Prism binoculars
R81/427	Re, C.J. November 20, 1981	Broadway Hale Stores, Inc.	74-4-01008, etc.	Export value	Appraised values specified on entry papers by liquidating officer, less any additions included which reflect currency revaluation	C.B.S. Imports Corp. v. U.S. (C.D. 4739)	Los Angeles Miscellaneous articles
R81/428	Re, C.J. November 20, 1981	International Fashions	75-10-02635, etc.	Export value	Appraised values specified on entry papers by liquidating officer, less any additions included which reflect currency revaluation	C.B.S. Imports Corp. v. U.S. (C.D. 4739)	Los Angeles Miscellaneous articles
R81/429	Re, C.J. November 20, 1981	K.W. International, Inc.	74-12-03439	Export value	Appraised values specified on entry papers by liquidating officer, less any additions included which reflect currency revaluation	C.B.S. Imports Corp. v. U.S. (C.D. 4739)	Los Angeles Miscellaneous articles

DECISION NUMBER	JUDGE & DATE OF DECISION	PLAINTIFF	COURT NO.	BASIS OF VALUATION	HELD VALUE	BASIS	PORT OF ENTRY AND MERCHANDISE
R81/430	Re, C. J. November 20, 1981	Nichimen Co., Inc.	75-11-02889, etc.	Export value	Appraised values shown on entry papers less additions included to reflect currency revaluation	C.B.S. Imports Corp. v. U.S. (C.D. 4739)	Los Angeles Miscellaneous articles
R81/431	Re, C. J. November 20, 1981	Nichimen Co., Inc.	75-12-03132, etc.	Export value	Appraised values shown on entry papers less additions included to reflect currency revaluation	C.B.S. Imports Corp. v. U.S. (C.D. 4739)	Los Angeles Miscellaneous articles
R81/432	Watson, J. November 20, 1981	Mitsubishi International Corporation	74-6-01570, etc.	American selling price	Appraised values less 23%, per pair	Agreed statement of facts	San Francisco Footwear
R81/433	Watson, J. November 20, 1981	Mitsubishi International Corporation	74-7-01896, etc.	American selling price	Appraised values less 23%, per pair	Agreed statement of facts	Charleston Footwear
R81/434	Watson, J. November 20, 1981	Mitsubishi International Corporation	76-11-02528, etc.	American selling price	Appraised values less 23%, per pair	Agreed statement of facts	Los Angeles Footwear
R81/435	Watson, J. November 20, 1981	Mitsubishi International Corporation	77-8-02382, etc.	American selling price	Appraised values less 23%, per pair	Agreed statement of facts	Baltimore Footwear

R81/436	Watson, J. November 20, 1981	Mitsubishi International Corporation	77-9-02623, etc.	American selling price	Appraised values less 23%, per pair	Agreed statement of facts	Charleston Footwear
R81/437	Watson, J. November 20, 1981	Mitsubishi International Corporation	79-9-01410, etc.	American selling price	Appraised values less 23%, per pair	Agreed statement of facts	Boston Footwear
R81/438	Watson, J. November 20, 1981	National Silver Co. et al.	R59/15363, etc.	Export value	F.o.b. unit invoice prices plus 20% of difference between f.o.b. unit invoice prices and appraised values	Agreed statement of facts	San Francisco Table cutlery and stainless steel flatware
R81/439	Watson, J. November 20, 1981	National Silver Co.	R61/3881, etc.	Export value	F.o.b. unit invoice prices plus 20% of difference between f.o.b. unit invoice prices and appraised values	Agreed statement of facts	New Bedford (Boston) Stainless steel flatware
R81/440	Watson, J. November 20, 1981	National Silver Co.	R68/14420, etc.	Export value	F.o.b. unit invoice prices plus 20% of difference between f.o.b. unit invoice prices and appraised values	Agreed statement of facts	New Bedford (Boston)1 Stainless steel flatware

Appeals to U.S. Court of Customs and Patent Appeals

Appeal 81-33.—ASSOCIATED DRY GOODS CORP. *v.* THE UNITED STATES, ET AL.—Quota on Wool Sweaters—Shetland Wool Full Fashioned Ladies Sweaters—TSUS—Cross-appeal from Decision and Judgment in Slip Op. 81-70, Appeal 81-30 Was Filed by the Government.

This case arises under an Agreement Relating to Trade in Cotton, Wool and Man-made Fiber Textiles and Textile Products entered into between the United States and the People's Republic of China on September 17, 1980. Although the Agreement specified quantitative limits for some categories of textile products, the category in which this merchandise falls (category 445/446) is unlimited.

The merchandise was exported from the People's Republic of China on January 18, 1981 and on January 24, 1981. When it arrived in the United States, it was excluded from entry and stored in a bonded warehouse by the customs officials, pursuant to a quota for the merchandise established by the Committee for Implementation of Textile Agreements. The Committee was created by Executive Order 11651 of March 3, 1972 to supervise and implement all trade agreements. Accordingly, the Committee established an import quota level of 183,706 dozen sweaters.

Plaintiff-appellant alleges and defendant-appellees admit that this quota was filled on February 9, 1981. Imports from the People's Republic of China of category 445/446 sweaters had been refused entry into the United States since that date. Plaintiff-appellant attempted to enter the merchandise subsequent to February 9, 1981, the date on which the quota was filled.

In Paragraph 8 of the Agreement, the United States reserved the right to request consultations with the People's Republic of China if it believed that imports in any category or categories, not covered by specific limits, due to market disruption, threatened to impede the orderly development of trade between the two countries.

Plaintiff-appellant claims that the merchandise was wrongfully denied entry because the Committee for the Implementation of Textile Agreements miscalculated the quota level at 183,706 dozen sweaters, and also because the Committee erred in concluding that

its importations of category 445/446 merchandise from the People's Republic of China were causing market disruption, or threat of disruption.

Defendant-appellees moved to dismiss the case contending that the United States Court of International Trade lacks jurisdiction over this controversy, because it involves foreign policy considerations and the conduct of foreign affairs. Defendant-appellees also contend that plaintiff-appellant has not stated a claim as to which relief may be granted.

The United States Court of International Trade disagrees with both of defendant-appellees' contensions. The Court decided that it has plenary jurisdiction to review the entire matter pursuant to 28 U.S.C. 1581(i) (3) and (4), and ordered that within 90 days from the date of its decision, the Committee for the Implementation of Textile Agreements shall issue a new determination after re-evaluation of the data upon which it based its findings of threat to market disruption; that plaintiff-appellant's merchandise be released by the customs service from the bonded warehouse, with the exception of the merchandise which is the subject of protest 1001-1-003596; and that defendant-appellees' motion is denied.

Plaintiff-appellant, being dissatisfied with the decision and judgment of the United States Court of International Trade, and in particular with the dismissal of protest 1001-1-003596, respectfully prays the United States Court of Customs and Patent Appeals pursuant to sections 1541(a) and 2601 (a) and (b), Title 28 U.S. Code, to review the questions involved therein and to grant such relief in the premises as to the Court shall seem just.

Appeal 81-34.—BRANIFF AIRWAYS, INC. *v.* THE UNITED STATES—Warranty Obligations—Purchasing Agreement—Cost of Services, Warranty, Taxes, Liabilities and Indemnities—Agency Commissions, Appraised Value—Constructed Value—TSUS. Appeal From Decision and Judgment in Slip Op. 81-64.

The merchandise in this case consists of 13 BAC One-Eleven Jet Passenger Aircraft manufactured by British Air Corporation and imported into the United States, at the port of Newark, New Jersey, between March 1965 and January 1966. It was agreed in the purchasing agreement entered into between BAC and plaintiff-appellant that 10% of the total purchase price for each aircraft represented the cost of "services," "warranties," "taxes," "liabilities," and "indemnities" furnished by the seller to the buyer, as well as commissions payable by BAC concerning the sale of the aircraft to plaintiff-appellant.

Plaintiff-appellant claims that included in the appraised value made by the Customs Service of each aircraft is the sum of $57,115.00 attributable to the cost of warranties relating to the correction and rectification of defects in the aircraft by BAC, in accordance with specific provisions in the purchasing agreement. Plaintiff-appellant further claims that the warranty in essence guarantees repair to the aircraft after importation into the United States, and is not a "general expense," or a "general expense and profit" in connection with the manufacture of the aircraft.

Profit, as stated in The United States *v.* Alfred Dunhill of London, Inc., 32 CCPA 187 C.A.D. 305 (1945) "is calculated on the difference between expenses and receipts."

Both plaintiff-appellant and defendant-appellee agree that the appraisement was properly made on the basis of constructed value, pursuant to section 402(d) of the Tariff Act of 1930, as amended by the Customs Simplification Act of 1956, 19 U.S.C. 1401a(d). The statute specifically mandates that the component which is a part of the constructed value includes "general expenses and profit," which have been incurred in the sale of the merchandise for shipment to the United States.

It is not in dispute that the sum of $57,115.00 is the amount attributable to the cost of the warranties included in the appraised valuation of the aircraft by the Customs Service. The sole question in dispute, therefore, is whether the sum has properly been included in the appraised constructed value.

Based upon the testimony taken at the trial and the evidence presented, the United States Court of International Trade decided that plaintiff-appellant has neither provided the Customs Service nor the Court with any evidence relating to expenses which may have been made by BAC pursuant to its contractural obligations to correct and rectify defects in the manufacture of the aircraft. Accordingly, in the absence of such proof, the Court deems the $57,115.00 to constitute "profit" and, therefore, is a part of the constructed value of the aircraft.

Pursuant to 28 U.S.C. section 2601, plaintiff-appellant appeals from the decision and judgment of the United States Court of International Trade.

Judgment of the U.S. Court of International Trade in Appealed Case

November 12, 1981

Appeal 80-39.—RANK PRECISION INDUSTRIES, INC. *v.* UNITED STATES.—Television Camera Lens System—Mounted Lens—Optical Appliances and Instruments—Parts of Television Cameras—TSUS.—C.D. 4866 reversed August 27, 1981 (C.A.D. 1269).

International Trade Commission Notices

Investigations by the U.S. International Trade Commission

DEPARTMENT OF THE TREASURY, DECEMBER 2, 1981

The appended notices relating to investigations by the U.S. International Trade Commission are published for the information of Customs officers and others concerned.

WILLIAM VON RAAB,
Commissioner of Customs.

In the Matter of CERTAIN METHODS FOR EXTRUDING PLASTIC TUBING	Investigation No. 337-TA-110

Order No. 1

Pursuant to my authority as Chief Administrative Law Judge of this Commission, I hereby designate Administrative Law Judge Donald K. Duvall as Presiding Officer in this investigation.

The Secretary shall serve a copy of this order upon all parties of record and shall publish it in the Federal Register.

Issued: November 18, 1981.

DONALD K. DUVALL,
Chief Administrative Law Judge.

In the Matter of CHLOROFLUOROHYDROCARBON DRYCLEANING PROCESS, MACHINES AND COMPONENTS THEREFOR	Investigation No. 337-TA-84

Notice of Termination of Investigation

AGENCY: U.S. International Trade Commission.

ACTION: Notice is hereby given that the Commission has granted a joint motion (Motion 84–28) to terminate the above-captioned investigation on the basis of a settlement agreement.

SUMMARY: On November 24, 1981, the Commission granted Motion 84–28 to terminate the investigation on the basis of a settlement agreement entered into between the complainant and all respondents.

FOR FURTHER INFORMATION CONTACT: Jack Simmons, Esq., Office of the General Counsel, U.S. International Trade Commission, telephone (202) 523–0350.

SUPPLEMENTARY INFORMATION: On July 1, 1981, the complainant, all respondents, and the Commission investigative attorney filed a joint motion (Motion 84–28) to terminate the above-captioned investigation, pursuant to rule 210.51(a) of the Commission's Rules of Practice and Procedure (46 F.R. 17530, Mar. 18, 1981), on the basis of a setttlement agreement executed by all the parties. On July 28, 1981, the presiding officer recommended that the motion be granted. The settlement agreement appears to resolve all outstanding issues between the parties.

The Commission published notice of the joint motion and a request for public comments in the Federal Register of September 2, 1981 (46 F.R. 44104). In response to the notice, comments were received from two Government agencies, the complainant Research Development Co., and one of the respondents, A.M.A. Universal S.p.A. The comments raised no substantive objections to the settlement agreement or to the joint motion.

The Commission's Action and Order and all other nonconfidential documents on the record in this investigation are available for public inspection during official business hours (8:45 a.m. to 5:15 p.m.) at the Office of the Secretary, U.S. International Trade Commission, 701 E Street, NW., Washington, D.C. 20436.

By order of the Commission.

Issued: November 24, 1981.

KENNETH R. MASON,
Secretary.

In the Matter of
CERTAIN AIRLESS PAINT SPRAY PUMPS AND COMPONENTS THEREOF
} Investigation No. 337–TA–90

Notice of Issuance of Exclusion Order

AGENCY: U.S. International Trade Commission.

ACTION: Issuance of exclusion order.

SUPPLEMENTARY INFORMATION: The Commission instituted this investigation to determine whether there is a violation of section 337 of the Tariff Act of 1930 (19 U.S.C. § 1337) in connection with the importation or sale of certain airless paint spray pumps and components thereof, and published notice of its investigation in the Federal Register of November 21, 1980 (45 F.R. 77190).

On November 4, 1981, the Commission unanimously determined [1] that there is a violation of section 337 in the unauthorized importation and sale of certain airless paint spray pumps which infringe certain claims of U.S. Letters Patent 3,254,845, U.S. Letters Patent 3,367,270, and U.S. Reissue Patent 29,055. The Commission further determined [2] that the appropriate remedy is an order directing that the infringing articles manufactured by Larius DiCastagna and C., S.N.C., Ltd., of Lecco, Italy, or any of its affiliated companies, parents, subsidiaries, or other related business entities, or their successors or assigns, be excluded from entry into the United States for the remaining terms of the patents, except under license granted by the patent owner.

Copies of the Commission's Action and Order, the opinions of the Commissioners, and all other nonconfidential documents on the record of this investigation are available for inspection by the public during official working hours (8:45 a.m. to 5:15 p.m.) in the Office of the Secretary, U.S. International Trade Commission, 701 E Street NW., Room 161, Washington, D.C. 20436, telephone 202-523-0161.

FOR FURTHER INFORMATION CONTACT: Scott Daniels, Esq., Office of the General Counsel, U.S. International Trade Commission, telephone 202-523-0480.

By order of the Commission.

Issued: November 24, 1981.[3]

KENNETH R. MASON,
Secretary.

---

[1] Commissioner Eckes not participating.

[2] Commissioners Calhoun and Frank dissenting.

[3] The Commission action and order referred to herein was originally scheduled to be issued on November 23, 1981, but was not because the Commission lacked authority to do so in the absence of approiatpred funds.

In the Matter of CERTAIN HEADBOXES AND PAPERMAKING MACHINE FORMING SECTIONS FOR THE CONTINUOUS PRODUCTION OF PAPER, AND COMPONENTS THEREOF	Investigation No. 337–TA–82A

Notice of Issuance of Exclusion Order

AGENCY: U.S. International Trade Commission.

ACTION: Issuance of exclusion order.

SUMMARY: On November 18, 1981, the Commission issued its Action and Order in the above-captioned investigation. The Commission ordered that multi-ply headboxes and papermaking machine forming sections for the continuous production of paper, and components thereof and spare parts therefor, manufactured by Aktiebolaget Karlstads Mekaniska Werkstad (KMW) of Karlstad, Sweden, or any of its affiliated companies, parents, subsidiaries, or other related business entities, or their successors or assigns, which infringe and contribute to or induce the infringement of claims 1, 12, 15, 16, or 22 of U.S. Letters Patent RE 28,269 and claims 4, 5, or 6 of U.S. Letters Patent 3,923,593 be excluded from entry into the United States for the remaining terms of the patents, except under license.

SUPPLEMENTARY INFORMATION: The Commission institute this investigation on July 1, 1981 (46 F.R. 34437) to determine whether there is a violation of section 337 of the Tariff Act of 1930 (19 U.S.C. § 1337) in connection with the importation into the United States and the sale therein of certain headboxes and papermaking machine forming sections for the continuous production of paper, and components thereof. On October 19, 1981, the Commission determined (Commissioner Stern dissenting and Commissioner Frank not participating) that there is a violation of section 337 in the unauthorized importation and sale of multi-ply headboxes and papermaking machine forming sections for the continuous production of paper, and components thereof, which are produced in accordance with claims 1, 12, 15, 16, or 22 of U.S. Letters Patent RE 28,269 and claims 4, 5, or 6 of U.S. Letters Patent 3,923,593. The Commission also determined (Commissioner Stern not voting and Commissioner Frank not participating) that the appropriate remedy is to exclude infringing articles manufactured by KMW from entry into the United States for the remaining terms of the aforesaid patents, except under

license by the patent owner, and that public-interest considerations do not preclude relief in this case. The Commission also determined that the articles ordered to be excluded shall be permitted to enter under a bond of 100 percent of the c.i.f. port of entry value of the the merchandise until the Commission's determination becomes final or is disapproved by the President.

Copies of the Commission's Action and Order and any other public documents on the record of this investigation are available for inspection by the public during official working hours (8:45 a.m. to 5:15 p.m.) in the Office of the Secretary, U.S. International Trade Commission, 701 E Street NW., Room 156, Washington, D.C. 20436, telephone 202–523–0350.

FOR FURTHER INFORMATION CONTACT: P. N. Smithey, Esq., Office of the General Counsel, U.S. International Trade Commission, telephone 202–523–0350.

By order of the Commission.

Issued: November 18, 1981.

Kenneth R. Mason,
Secretary.

Index

U.S. Customs Service

	T.D. No.
Treasury decisions: Carrier bonds	81-294
Foreign currencies:	
Daily rates; Oct. 19 thru Oct. 23, 1981	81-295
Daily rates; Oct. 26 thru Oct. 30, 1981	81-296
Variances; Oct. 19 thru Oct. 23, 1981	81-297
Variances; Oct. 26 thru Oct. 30, 1981	81-298
Reimbursable services—Excess cost of preclearance operation	81-293

Court of Customs and Patent Appeals

	Appeal No.
Mount Washington Tanker Co., a subsidiary of Victory Carriers, Inc. v. The United States	81-10

U.S. GOVERNMENT PRINTING OFFICE : 1981 O - 357-931

DEPARTMENT OF THE TREASURY
U.S. CUSTOMS SERVICE
WASHINGTON, D.C. 20229

OFFICIAL BUSINESS
PENALTY FOR PRIVATE USE, $300

POSTAGE AND FEES PAID
DEPARTMENT OF THE TREASURY (CUSTOMS)
(TREAS. 552)

15/51

Customs Bulletin

Regulations, Rulings, Decisions, and Notices concerning Customs and related matters

and Decisions

of the United States Court of Customs and Patent Appeals and the United States Court of International Trade

Vol. 15 DECEMBER 23, 1981 No. 51

NEWARK PUBLIC LIBRARY

JAN 8 1982

U. S. GOVT. PUBS.
DEPOSITORY 376

This issue contains

T.D. 81-299 Through 81-303
Appeal No. 80-31
Slip Op. 81-108 Through 81-110
Protest Abstract P81/186
Reap. Abstracts R81/441 Through R81/450
International Trade Commission Notices

THE DEPARTMENT OF THE TREASURY
U.S. Customs Service

T1. 11/3:

NOTICE

The abstracts, rulings, and notices which are issued weekly by the U.S. Customs Service are subject to correction for typographical or other printing errors. Users may notify the U.S. Customs Service, Logistics Management Division, Washington, D.C. 20229, of any such errors in order that corrections may be made before the bound volumes are published.

For sale by the Superintendent of Documents, U.S. Government Printing Office, Washington, D.C. 20402. Price: $2.50 (single copy domestic); $3.15 (single copy foreign). Subscription price: $95.00 a year domestic; $118.75 a year foreign.

U.S. Customs Service

Treasury Decisions

(T.D. 81-299)

Bonds

Approval of a carrier's bond, Customs Form 3587

A bond of a carrier for the transportation of bonded merchandise has been approved as shown below. The approval of the bond is temporary until July 12, 1982.

Dated: December 2, 1981.

Name of principal and surety	Date of bond	Date of approval	Filed with district director/area director/amount
Transitall Services, Inc., 2 N. Riverside Plaza, Chicago, Ill.; motor carrier; Washington International Ins. Co.	Nov. 2, 1981	Nov. 18, 1981	Chicago, Ill. $25,000

BON-3-03

GEORGE C. STEUART
(For Marilyn G. Morrison, Director,
Carriers, Drawback and Bonds Division).

(T.D. 81-300)

DRAWBACK CONTRACTS (RATES)

There follows an approved drawback contract (rate). Any person who can comply with the conditions of this contract may adhere to it by notifying a Regional Commissioner of Customs in writing of its intentions to do so and providing him with the following information:

1. Name and address of adherent;
2. Factories which will operate under the contract; and

3. If a corporation, the names of officers or persons with power of attorney who will sign drawback documents on behalf of adherent.

This contract is designed to simplify drawback procedures.

(DRA–1–213544)

Dated: December 3, 1981.

GEORGE C. STEUART
(For Marilyn G. Morrison, Director,
Carriers Drawback and Bonds Division.)

DRAWBACK CONTRACT UNDER 19 U.S.C. 1313(b) FOR ARTICLES MANUFACTURED WITH THE USE OF COMPONENT PARTS

Imported Merchandise or Drawback Products to be Designated as the Basis for Drawback on the Exported Articles

Component Parts Identified by Individual Part Numbers

Duty-Paid, Duty-Free or Domestic Merchandise of the Same Kind and Quality as That Designated Which Will Be Used in the Manufacture of the Exported Products

Component Parts Identified With the Same Individual Part Numbers as Those in the Column Immediately to the Left Hereof

The designated components will have been manufactured in accordance with the same specifications and from the same materials, and identified by the same part number as the substituted components. Further, the designated and substituted components are used interchangeably in the manufacture of the exported articles upon which drawback will be claimed. Specifications or drawings will be maintained and made available for Customs officers.

The imported merchandise which we will designate on our claims will be so similar in quality to the merchandise used in producing the exported articles on which we claim drawback that the merchandise used would, if imported, be subject to the same rate of duty as the imported designated merchandise.

Fluctuations in market value resulting from factors other than quality will not affect the drawback.

EXPORTED ARTICLES ON WHICH DRAWBACK WILL BE CLAIMED

The exported articles will have been manufactured in the United States using components described in the parallel columns above.

GENERAL STATEMENT

We manufacture for our own account. We may produce articles for the account of another or another manufacturer may produce for our account under contract within the principal and agency relationship outlined in T.D. 55027(2) and T.D. 55207(1).

PRODUCTION

The components described in the parallel columns will be used to manufacture new and different articles, having distinctive names, characters or uses.

MULTIPLE PRODUCTS—RELATIVE VALUES

Not applicable.

WASTE

We understand that no drawback is payable on any waste which results from the manufacturing operation. Unless the claim for drawback is based on the quantity of components appearing in the exported articles, we agree to keep records to establish the value (or the lack of value), the quantity, and the disposition of any waste that results from manufacturing the exported articles. If no waste results, we agree to keep records to establish that fact.

PROCEDURES AND RECORDS MAINTAINED

We will maintain records to establish:

1. The identity and specifications of the merchandise we designate;

2. The quantity of merchandise of the same kind and quality as the designated merchandise [1] we used to produce the exported articles;

3. That, within 3 years after receiving it at our factory, we used the designated merchandise to produce articles. During the same three-year period, we produced [2] the exported articles.

We realize that to obtain drawback it must be established that the completed articles were exported within 5 years after the importation of the imported merchandise.

---

[1] If claims are to be made on an "appearing in" basis, the remainder of this sentence would read "appearing in the exported articles we produce."

[2] The date of production is the date an article is completed.

Our records establishing our compliance with these requirements will be available for audit by Customs during business hours. We understand that drawback is not payable without proof of compliance.

INVENTORY PROCEDURES

Our inventory procedures will show how we will satisfy the legal requirements discussed under the heading "Procedures and Records Maintained." We understand that if our records do not show that we satisfy those legal requirements, drawback cannot be paid.

BASIS OF CLAIM FOR DRAWBACK

Drawback will be claimed on the quantity of components used in producing the exported articles only if there is no waste in the manufacturing operation.

If there is no waste or if the manufacturer does not want to keep records of any waste involved, drawback may be claimed on the quantity of eligible components that appear in the exported articles.

If there is waste recovered from the manufacturing operation and records are kept which show the quantity and value (or lack of value) of the waste, drawback may be claimed on the quantity of eligible material used to produce the exported articles, less the amount of those components which the value of the waste would replace.

AGREEMENTS

We specifically agree that we will:

1. Comply fully with the terms of this statement when claiming drawback;
2. Open our factory and records for examination at all reasonable hours by authorized Government officers;
3. Keep our drawback related records and supporting data for at least 3 years from the date of payment of any drawback claim predicated in whole or in part upon this statement;
4. Keep this statement current by reporting promptly to the regional commissioner who liquidates its claims any changes in the number or locations of its offices or factories, the corporate name, or the corporate organization by succession or reincorporation;
5. Keep a copy of this statement on file for ready reference by employees and require all officials and employees concerned to familiarize themselves with the provisions of this statement; and,
6. Issue instructions to insure proper compliance with title 19, United States Code, sections 1313(b) and (i), part 22 of the Customs Regulations and this statement.

(T.D. 81-301)

Synopses of drawback decisions

The following are synopses of drawback rates issued June 10, 1981, to November 18, 1981, inclusive, pursuant to sections 22.1 through 22.5, inclusive, Customs Regulations.

In the synopses below are listed for each drawback rate approved under 19 U.S.C. 1313 (a) and (b), the name of the company, the specified articles on which drawback is authorized, the merchandise which will be used to manufacture or produce these articles, the factories where the work will be accomplished, the date the statement was signed, the basis for determining payment, the Regional Commissioner to whom the rate was forwarded, and the date on which it was forwarded.

(DRA-1-09 213777)

Dated: December 3, 1981.

GEORGE C. STEUART,
(For Marilyn G. Morrison, Director,
Carriers, Drawback and Bonds Division).

(A) Company: Allis-Chalmers Corp.
Section 1313(a) articles: Tractors, implements, combines, and various other machinery.
Section 1313(a) merchandise: Castings and forgings in rough or finished condition.
Section 1313(b) articles: Tractors, implements, combines, and various other machinery.
Section 1313(b) merchandise: Hot rolled steel plate; rough and finished castings and forgings.
Factories: Various factories as listed in manufacturer's statement.
Statement signed: June 23, 1981.
Basis of claim: Appearing in.
Rate forwarded to Regional Commissioner of Customs: Houston, August 20, 1981.
Revokes: T.D. 81-180-B.

(B) Company: BHK of America.
Section 1313(a) articles: Vinyl laminated parts.
Section 1313(a) merchandise: P.V.C. vinyl films; water based adhesive; wood and plastic dowels; crating lumber; particleboard.
Section 1313(b) articles: Vinyl laminated parts.

Section 1313(b) merchandise: P.V.C. vinyl films; water based adhesive; wood and plastic dowels, crating lumber; particleboard.
Factory: Mahwah, NJ.
Statement signed: April 28, 1981.
Basis of claim: Used in.
Rate forwarded to Regional Commissioner of Customs: New York, July 16, 1981.

(C) Company: Brown & Williamson Tobacco Corp.
Section 1313(a) articles: Cigarette tobacco in bulk or in packages; cigarette tobacco rolled into cigarettes.
Section 1313(a) merchandise: Filler tobacco; menthol.
Section 1313(b) articles: Cigarette tobacco in bulk or in packages; cigarette tobacco rolled into cigarettes; cigarette packages; smoking (pipe) tobacco in the form of granulated tobacco or cut-plug tobacco and packaging.
Section 1313(b) merchandise: Flue-cured tobacco; burley tobacco; raw sugar; cigarette paper; cigarette tipping paper; aluminum foil; menthol.
Factories: Louisville, KY; Petersburg, VA; Macon, GA; Winston-Salem, NC.
Statement signed: February 29, 1980.
Basis of claim: Used in.
Rate forwarded to Regional Commissioner of Customs: Chicago, September 22, 1981.
Revokes: T.D. 51005–B as amended by T.D. 53047–A and T.D. 69–240–G.

(D) Company: Carolina Chemicals, Inc.
Section 1313(a) articles: Dialifor, in hydrocarbon solution.
Section 1313(a) merchandise: Dialifor, isolated.
Section 1313(b) articles: Torak Emulsifiable Concentrate.
Section 1313(b) merchandise: Dialifor, in hydrocarbon solution.
Factory: West Columbia, SC.
Statement signed: May 20, 1981.
Basis of claim: Used in.
Rate forwarded to Regional Commissioner of Customs: Baltimore, September 30, 1981.

(E) Company: Centronics Data Computer Corp.
Section 1313(a) articles: Printers; miniprinters; kits, units, and assemblies therefor.
Section 1313(a) merchandise: Various parts for printers and assemblies.

Section 1313(b) articles: Electronic printers 700 series.
Section 1313(b) merchandise: Pinch and tractor mechanisms for 700 series printers.
Factory: Hudson, NH.
Statement signed: March 16, 1981.
Basis of claim: Appearing in.
Rate forwarded to Regional Commissioner of Customs: New York, June 10, 1981.

(F) Company: Cummins Charleston, Inc.
Section 1313(a) articles: Internal combustion diesel engines.
Section 1313(a) merchandise: Component parts for diesel internal combustion engines.
Section 1313(b) articles: Internal combustion diesel engines.
Section 1313(b) merchandise: Crankshafts; cylinder blocks; connecting rods; cylinder heads.
Factory: Charleston, SC.
Statement signed: February 24, 1981.
Basis of claim: Appearing in.
Rate forwarded to Regional Commissioner of Customs: Chicago, November 9, 1981.
Revokes: T.D. 80–154–D.

(G) Company: Dataproducts Corp.
Section 1313(a) articles: Printers and lower level sub-assemblies.
Section 1313(a) merchandise: Various parts of printers and sub-assemblies.
Section 1313(b) articles: Printers and lower level sub-assemblies.
Section 1313(b) merchandise: Various parts of printers and sub-assemblies.
Factories: Woodland Hills, CA (2).
Statement signed: June 4, 1981.
Basis of claim: Used in.
Rate forwarded to Regional Commissioner of Customs: Los Angeles, October 8, 1981.
Revokes: T.D. 80–94–D.

(H) Company: Design Resources, Inc.
Section 1313(a) articles: Finished piece goods.
Section 1313(a) merchandise: Greige piece goods.
Section 1313(b) articles: Finished piece goods.
Section 1313(b) merchandise: Greige piece goods.
Factories: Through its agents operating under T.D.'s 55207(1) and/or 55207(2).

Statement signed: December 19, 1980.
Basis of claim: Used in, less valuable waste.
Rate forwarded to Regional Commissioner of Customs: New York, July 14, 1981.

(I) Company: Dodge Cork Company, Inc.
Section 1313(a) articles: Cork stopper assemblies.
Section 1313(a) merchandise: Cork blanks or stubs.
Section 1313(b) articles: Rubber cork sheets, slabs, blocks, rolls, mats, logs; composition cork sheets, slabs, blocks, rolls, mats, logs.
Section 1313(b) merchandise: Granulated (broken) cork.
Factory: Lancaster, PA.
Statement signed: May 21, 1981.
Basis of claim: Used in.
Rate forwarded to Regional Commissioner of Customs: Baltimore, August 4, 1981.
Revokes: T.D. 52215–F.

(J) Company: General Electric Co.
Section 1313(a) articles: Gas turbines and components, accessories, systems, sub-assemblies and parts thereof.
Section 1313(a) merchandise: Gas turbines (partially completed) and components, accessories, sub-assemblies and parts thereof.
Section 1313(b) articles: Gas turbines and components, accessories, systems, sub-assemblies and parts thereof.
Section 1313(b) merchandise: Gas turbines (partially completed) and components, accessories, sub-assemblies and parts thereof.
Factories: Schenectady, NY; Greenville, SC.
Statement signed: June 24, 1981.
Basis of claim: Used in as to finished merchandise; used in, less valuable waste as to partially finished merchandise.
Rate forwarded to Regional Commissioner of Customs: New York, July 16, 1981.
Revokes: T.D. 78–258–J.

(K) Company: Glen Raven Mills, Inc.
Section 1313(a) articles: Multilobal bright textured polyester yarn.
Section 1313(a) merchandise: Multilobal polyester yarn, nontextured.
Section 1313(b) articles: Multilobal bright textured polyester yarn.
Section 1313(b) merchandise: Multilobal polyester yarn, nontextured.
Factories: Newland and Altamahaw, NC.
Statement signed: June 4, 1981.
Basis of claim: Used in.

Rate forwarded to Regional Commissioner of Customs: Miami, June 16, 1981.
Revokes: T.D. 80–192–L.

(L) Company: Hercules, Inc.
Section 1313(a) articles: Dialifor, in hydrocarbon solution.
Section 1313(a) merchandise: Dialifor, isolated.
Section 1313(b) articles: Torak Emulsifiable Concentrate.
Section 1313(b) merchandise: Dialifor, in hydrocarbon solution.
Factories: Plaquemine, LA; and through its agents operating under T.D.s 55207(1) and/or 55027(2).
Statement signed: May 7, 1981.
Basis of claim: Used in.
Rate forwarded to Regional Commissioner of Customs: Baltimore, September 30, 1981.

(M) Company: Hewlett-Packard Co.
Section 1313(a) articles: Electronic assemblies, instruments, and systems.
Section 1313(a) merchandise: Various semiconductor devices.
Section 1313(b) articles: Electronic assemblies. instruments, and systems.
Section 1313(b) merchandise: Various semiconductor devices.
Factories: Various factories as listed in manufacturer's statement.
Statement signed: August 4, 1981.
Basis of claim: Appearing in.
Rate forwarded to Regional Commissioner of Customs: San Francisco, September 2, 1981.

(N) Company: Hewlett-Packard Co.
Section 1313(a) articles: Analytical instruments, computers, terminals, calculators, medical instruments, computer peripherals, and other electronic products.
Section 1313(a) merchandise: Liquid crystal displays (LCD).
Section 1313(b) articles: Analytical instruments, computers, terminals, calculators, medical instruments, computer peripherals, and other electronic products.
Section 1313(b) merchandise: Liquid crystal displays (LCD).
Factories: Various factories as listed in manufacturer's statement.
Statement signed: September 17, 1981.
Basis of claim: Appearing in.
Rate forwarded to Regional Commissioner of Customs: San Francisco, October 27, 1981.

(O) Company: Honeywell-Synertek, Inc.
Section 1313(a) articles: Semiconductor circuits (dice) on wafers.
Section 1313(a) merchandise: Silicon wafers.
Section 1313(b) articles: Semiconductor circuits (dice) on wafers.
Section 1313(b) merchandise: Silicon wafers.
Factory: Santa Clara, CA.
Statement signed: May 26, 1981.
Basis of claim: Used in.
Rate forwarded to Regional Commissioner of Customs: San Francisco, July 31, 1981.

(P) Company: The Indium Corporation of America.
Section 1313(a) articles: Indium ingots pure, indium wire, sheet foil and ribbon, indium alloys, indium and indium alloy preforms, and indium salts and plating baths.
Section 1313(a) merchandise: Indium metal ingots.
Section 1313(b) articles: Indium ingots pure, indium wire, sheet foil and ribbon, indium alloys, indium and indium alloy preforms, and indium salts and plating baths.
Section 1313(b) merchandise: Indium metal ingots.
Factory: Utica, NY.
Statement signed: August 31, 1981.
Basis of claim: Appearing in.
Rate forwarded to Regional Commissioner of Customs: Boston, November 13, 1981.

(Q) Company: Intel Corp.
Section 1313(a) articles: Partially fabricated integrated circuits in die and wafer form; finished integrated circuits and semiconductor devices; finished systems and related equipment.
Section 1313(a) merchandise: High purity silicon wafers; packages; frames; lids; unfinished integrated circuits and semiconductor devices; finished integrated circuits and semiconductor devices.
Section 1313(b) articles: Partially fabricated integrated circuits in die and wafer form; finished integrated circuits and semiconductor devices; finished systems and related equipment.
Section 1313(b) merchandise: High purity silicon wafers; packages; frames; lids; unfinished integrated circuits and semiconductor devices; finished integrated circuits and semiconductor devices.
Factories: Chandler and Phoenix, AZ; Santa Clara (5), Sunnyvale (2), Santa Cruz, and Livermore, CA; Aloha and Hillsboro, OR.
Statement signed: October 7, 1981.
Basis of claim: Used in, less valuable waste.

Rate forwarded to Regional Commissioner of Customs: San Francisco. October 28, 1981.
Revokes: T.D. 81–45–J.

(R) Company: Kelsey-Hayes Co.
Section 1313(a) articles: Brake assemblies.
Section 1313(a) merchandise: Brake parts.
Section 1313(b) articles: Motor vehicle parts.
Section 1313(b) merchandise: Hot rolled steel sheet, strip, blanks and plate; hot and cold rolled forging bars; brake parts.

Factories: Romulus, Jackson and Brighton, MI; Mount Vernon, OH; Davenport, IA; Philadelphia, PA; Sedalia, MO.
Statement signed: June 8, 1981.
Basis of claim: Appearing in.
Rate forwarded to Regional Commissioner of Customs: New York, October 1, 1981.

(S) Company: Olin Ski Co., Inc.
Section 1313(a) articles: Snow skis.
Section 1313(a) merchandise: Rubber; phenolic; woven fiberglass; ink; ink thinner; ink retarder.
Section 1313(b) articles: Snow skis.
Section 1313(b) merchandise: Polyethylene; acrylonitrile butadiene styrene; fiberglass; wood platens; fleece; aluminum; carbon steel; polyurethane foam.
Factory: Middletown, CT.
Statement signed: April 3, 1981.
Basis of claim: Used in.
Rate forwarded to Regional Commissioner of Customs: Boston, October 20, 1981.

(T) Company: Outboard Marine Corp.
Section 1313(a) articles: Outboard motors, lawnmowers, garden equipment, light industrial vehicles and parts, aluminum alloy die castings, and steel stampings.
Section 1313(a) merchandise: Cast iron alloy forgings, aluminum ingot alloys, stainless steel sheets and bar stock, and various parts.
Section 1313(b) articles: Outboard motors, lawnmowers, garden equipment, light industrial vehicles and parts, aluminum alloy die castings, and steel stampings.
Section 1313(b) merchandise: Cast iron alloy forgings, aluminum ingot alloys, stainless steel sheets and bar stock, and various parts.

Factories: Waukegan and Galesburg, IL; Milwaukee and Beloit, WI; Lincoln, NE.
Statement signed: June 9, 1980.
Basis of claim: Appearing in.
Rate forwarded to Regional Commissioner of Customs: Chicago, November 5, 1981.
Revokes: T.D. 54204–A.

(U) Company: Signetics Corp.
Section 1313(a) articles: Finished integrated circuits.
Section 1313(a) merchandise: Unfinished semiconductor devices.
Section 1313(b) articles: Finished integrated circuits.
Section 1313(b) merchandise: Unfinished semiconductor devices.
Factories: Sunnyvale and Sacramento, CA.
Statement signed: June 4, 1981.
Basis of claim: Appearing in.
Rate forwarded to Regional Commissioner of Customs: San Francisco, July 23, 1981.

(V) Company: Sundstrand Corp., Hydraulics Div.
Section 1313(a) articles: Fuel oil pumps.
Section 1313(a) merchandise: Additional fuel oil pump parts.
Section 1313(b) articles: Fuel oil pumps.
Section 1313(b) merchandise: Additional fuel oil pump parts.
Factory: Rockford, IL.
Statement signed: April 24, 1981.
Basis of claim: Used in under section 1313(a); Used in, less valuable waste under section 1313(b).
Rate forwarded to Regional Commisioner of Customs: Chicago, August 11, 1981.

(W) Company: Sundstrand Corp., Sundstrand Aviation Operations Div.
Section 1313(a) articles: Aircraft electrical, hydraulic and mechanical systems and components.
Section 1313(a) merchandise: Various parts for aircraft electrical, hydraulic, and mechanical systems and components, finished and unfinished.
Section 1313(b) articles: Aircraft electrical, hydraulic and mechanical systems and components.
Section 1313(b) merchandise: Various parts for aircraft electrical, hydraulic, and mechanical systems and components, finished and unfinished.

Factories: Rockford, IL; Denver, CO; Fullerton, CA.
Statement signed: October 23, 1981.
Basis of claim: Used in.
Rate forwarded to Regional Commissioner of Customs: Chicago, November 3, 1981.
Revokes: T.D. 81–180–V.

(X) Company: Textron, Inc., Homelite Div.
Section 1313(a) articles: Chain saws, stringtrimmers, brushcutters, construction equipment and spare parts.
Section 1313(a) merchandise: Component parts.
Section 1313(b) articles: Chain saws, stringtrimmers, brushcutters, construction equipment and spare parts.
Section 1313(b) merchandise: Component parts.
Factories: Gastonia and Charlotte, NC; Greer, SC.
Statement signed: October 27, 1980.
Basis of claim: Appearing in.
Rate forwarded to Regional Commissioner of Customs: Baltimore, August 31, 1981.
Revokes: T.D. 76–328–A.

(Y) Company: UOP Inc., Norplex Div.
Section 1313(a) articles: Bonding sheets; pressed laminates.
Section 1313(a) merchandise: Resins.
Section 1313(b) articles: Bonding sheets; pressed laminates.
Section 1313(b) merchandise: DiMethylformamide solvent (DMF).
Factories: La Crosse and Black River Falls, WI; Franklin, IN; Postville, IA.
Statement signed: July 31, 1981.
Basis of claim: Used in.
Rate forwarded to Regional Commissioner of Customs: Chicago, November 18, 1981.

(Z) Company: Unit Rig & Equipment Co.
Section 1313(a) articles: Off-highway dump trucks; engine modules.
Section 1313(a) merchandise: Diesel engines; tires; front axle castings; front axle forgings.
Section 1313(b) articles: Off-highway dump trucks; engine modu les
Section 1313(b) merchandise: Diesel engines; tires; front axle castings, front axle forgings.
Factories: Tulsa, OK: Conroe, TX.
Statement signed: November 21, 1980.
Basis of claim: Appearing in.

Rate forwarded to Regional Commissioner of Customs: Houston, August 13, 1981.

Exxon Corp., Exxon Chemical Company U.S.A. Division operating under T.D. 80–192–H has changed its name to Exxon Chemical Americas, a division of Exxon Chemical Company.

Kalamazoo Spice Extraction Co. operating under T.D. 54990–I, as amended by T.D. 66–60–K and T.D. 72–218–H, has changed its name to Kalsec, Inc.

(T.D. 81–302)

Foreign Currencies—Daily Rates for Countries not on Quarterly List

The Federal Reserve Bank of New York, pursuant to section 522(c), Tariff Act of 1930, as amended (31 U.S.C. 372 (c)), has certified buying rates for the dates and foreign currencies shown below. The rates of exchange, based on these buying rates, are published for the information and use of Customs officers and others concerned pursuant to Part 159, Subpart C, Customs Regulations (19 CFR 159, Subpart C).

(11/3/81, Bank Holiday, Countries take 11/2/81 rate)

Argentina peso:	
November 2–5, 1981	$0. 000160
November 6, 1981	. 000159
Chile peso:	
November 2–6, 1981	$0. 025575
Colombia peso:	
November 2–5, 1981	$0. 017683
November 6, 1981	. 017452
Greece drachma:	
November 2–4, 1981	$0. 017809
November 5, 1981	. 017889
November 6, 1981	. 017825
Indonesia rupiah:	
November 2–6, 1981	$0. 001582
Israel shekel:	
November 2, 1981	$0. 070472
November 4, 1981	. 070972
November 5–6, 1981	. 070472
Peru sol:	
November 2–5, 1981	$0. 002179
November 6, 1981	. 002119

South Korea won:
November 2–6, 1981 ..... $0.001453

(LIQ–01–03 O:C:E)

Dated: December 1, 1981.

KENNETH A. RICH,
Acting Chief,
Customs Information Exchange.

(T.D. 81–303)

Foreign Currencies—Variances From Quarterly Rate

The following rates of exchange are based upon rates certified to the Secretary of the Treasury by the Federal Reserve Bank of New York, pursuant to section 522(c), Tariff Act of 1930, as amended (31 U.S.C. 372(c)), and reflect variances of 5 per centum or more from the quarterly rate published in Treasury Decision 81–269 for the following countries. Therefore, as to entries covering merchandise exported on the dates listed, whenever it is necessary for Customs purposes to convert such currency into currency of the United States, conversion shall be at the following rates.

(11/3/81, Bank Holiday, Countries take 11/2/81 rate)

Austria schilling:
November 4, 1981 ..... $0.064516
November 5, 1981 ..... .064267
Brazil cruziero:
November 2–6, 1981 ..... $0.008709
Germany deutsche mark:
November 4, 1981 ..... $0.452080
Hong Kong dollar:
November 2, 1981 ..... $0.171527
November 4, 1981 ..... .174734
November 5, 1981 ..... .176211
November 6, 1981 ..... .176149
Netherlands guilder:
November 2, 1981 ..... $0.408163
November 4, 1981 ..... .410593
November 5, 1981 ..... .407664
November 6, 1981 ..... .408831

357-932 O - 81 - 2

Switzerland franc:	
November 2, 1981	$0. 554785
November 4, 1981	. 559284
November 5, 1981	. 557724
November 6, 1981	. 558503

(LIQ–03–01 O:C:E)

Dated: December 1, 1981.

KENNETH A. RICH,
Acting Chief,
Customs Information Exchange.

Decisions of the United States Court of Customs and Patent Appeals

NATIONAL SUGAR REFINING CO. *v.* U.S., No. 80-31

1. JUDGMENT OF COURT OF INTERNATIONAL TRADE—EXEMPTION FROM DUTY OF RAW SUGAR UNDER PRESIDENTIAL PROCLAMATION

Court of International Trade judgment sustaining the Government's position that the subject sugar was not exempt from increased duty under item 155.20, Tariff Schedules of the United States (TSUS) by Presidential Proclamation (PP) 4466 issued October 4, 1976 viz. 41 Fed. Reg. 44031 (1976), modifying PP 4463 issued September 21, 1976 viz. 41 Fed. Reg. 41681 (1976), affirmed.

2. ID.—DECISION OF CCPA IN *Westway* v. *U.S.* (1980) CONSTRUING PRESIDENTIAL PROCLAMATION

In *Westway Trading Corp.* v. *United States*, 68 CCPA ——, C.A.D. 1254, 633 F. 2d 1388 (1980), this court, construing PP 4466, held that "exported to the United States before 12:01 a.m. * * *, September 21, 1976.", expressed a Presidential intent to exempt only sugar which had finally departed the country of exportation for the United States before that time and date.

3. ID.

We see, and have been shown, no reason to depart from the construction of PP 4466 adopted in *Westway*.

4. ID.—INTENTION TO EXEMPT

Nothing in PP 4466 indicates any intent to exempt, for any reason, sugar exported after 12:01 a.m. on September 21, 1976, whether that sugar was earlier contracted for, laden ready to depart, had its title passed, or was otherwise treated.

5. ID.—FILING OF PRESIDENTIAL PROCLAMATION

That PP 4463 was filed with the Federal Register after the vessel sailed from Dominican Republic is irrelevant. PP 4463's provision for increased duties was applicable to sugar entered for consumption into the United States and bore no relation to dates of exportation.

F. 2d

NATIONAL SUGAR REFINING COMPANY, APPELLANT v. THE UNITED STATES, APPELLEE

No. 80–31

United States Court of Customs and Patent Appeals, December 3, 1981, Appeal from United States Court of International Trade, C.D. 4849.

[Affirmed]

Robert D. Whoriskey and *Edward A. Kotite*, attorneys for appellant.

Thomas S. Martin, Acting Asst. Atty. General, *David M. Cohen*, Director, *Joseph I. Liebman*, Attorney-in-charge and *Saul Davis*, attorneys for appellee.

[Oral argument on October 5, 1981 by *Edward A. Kotite* for appellant and *Saul Davis* for appellee.]

Before MARKEY, *Chief Judge*, RICH, BALDWIN, MILLER, and NIES, *Associate Judges*.

MARKEY, *Chief Judge*.

[1] National Sugar Refining Company (National Sugar) appeals from the judgment of the United States Court of International Trade [1] granting the United States' cross-motion for summary judgment and sustaining its position that the subject sugar was not exempt from increased duty under item 155.20, Tariff Schedules of the United States (TSUS) by Presidential Proclamation (PP) 4466 issued October 4, 1976 viz. 41 Fed. Reg. 44031 (1976), modifying PP 4463 issued September 21, 1976 viz. 41 Fed. Reg. 41681 (1976). We affirm.

BACKGROUND

Raw sugar was laded at the port of Rio Haina, Dominican Republic, on September 20, 1976. It finally departed that port for the United States at 7:30 a.m., local time, September 21, 1976, and was entered for consumption at Philadelphia in late October 1976.

PP 4463 was issued on September 21, 1976, increasing the duty on sugar entered, or withdrawn from warehouse, for consumption on or

[1] The judgment of the United States Customs Court, now the United States Court of International Trade, is reported at —— Cust. Ct. ——, C.D. 4849, 488 F. Supp. 907 (1980).

after that date.[2] PP 4463 was filed with the Federal Register at 3:39 p.m. on September 21, 1976. On October 4, 1976, PP 4466 was issued, exempting from that increase sugar "exported to the United States before 12:01 a.m. * * *, September 21, 1976." [3]

When the sugar was entered for consumption, the Customs Service imposed the increased duty provided by PP 4463. National Sugar protested that assessment, urging that the sugar was exempt under PP 4466 from the increase.

Judge Boe of the Court of International Trade sustained the assessment, reasoning that because the sugar finally departed the Dominican Republic after 12:01 a.m., September 21, 1976, it was not "exported * * * before 12:01 a.m. * * *, September 21, 1976" within the intendment of PP 4466, citing *Westway Trading Corp.* v. *United States*, 83 Cust. Ct. ——, C.D. 4826, 483 F. Supp. 300 (1979). *Westway* was affirmed after judgment was issued below in this case. *Westway Trading Corp.* v. *United States*, 68 CCPA ——, C.A.D. 1254, 633 F. 2d 1388 (1980).

ISSUE

Whether the subject sugar is exempt under PP 4466 from the increased duties imposed by PP 4463.

OPINION

National Sugar says the vessel was laden, bills of lading were issued, title passed, and the vessel was made ready to sail, all by 8:40 p.m., September 20, 1976; that but for local navigational restrictions prohibiting departure at night, the vessel would have departed the Dominican Republic before September 21, 1976; and that, because it had done all within its power to achieve exportation, the sugar was

---

[2] PP 4463 (September 21, 1976) (T.D. 76-309):

* * * * * * * *

Now, THEREFORE, I, GERALD R. FORD, * * * do hereby proclaim until otherwise superseded by law:

* * * * * * * *

B. The rates of duty in rate column numbered 1 for items 155.20 and 155.30 of Subpart A, Part 10, Schedule 1 of the TSUS, are modified, and the following rates are established:

155.20	1.9875¢ per lb. less 0.028125¢ per lb. for each degree under 100 degrees * * * but not less than 1.284375¢ per lb.
155.30	Dutiable on total sugars at the rate per lb. applicable under Item 155.20 to sugar testing 100 degrees.

C. The provisions of this proclamation shall become effective with respect to articles entered, or withdrawn from warehouse, for consumption on and after the date of this Proclamation and shall remain in effect until the President otherwise proclaims or until otherwise superseded by law.

[3] PP 4466 (October 4, 1976) (T.D. 76-309):

* * * * * * * *

NOW, THEREFORE, I GERALD R. FORD, * * * [in order to alleviate hardships which may result from increasing the rate of duty with respect to certain goods that were exported prior to the effective date of that Proclamation,] do hereby proclaim that paragraph C of Proclamation No. 4463 of September 21, 1976, is hereby amended to read as follows:

C. The Provisions of this Proclamation shall become effective with respect to articles entered, or withdrawn from warehouse, for consumption on and after September 21, 1976, and shall remain in effect until the President otherwise proclaims or until otherwise superseded by law. However, the provisions of this Proclamation shall not be effective with respect to articles exported to the United States before 12:01 A.M. (U.S. Eastern Daylight Savings Time), September 21, 1976, provided that such articles are entered, or withdrawn from warehouse, for consumption on or before November 8, 1976.

"exported to the United States" before 12:01 a.m., September 21, 1976 within the intendment of PP 4466. National Sugar also says its having contracted to buy the sugar before September 21, 1976 is an additional basis for applying the exemption of PP 4466.

Citing Headnote 2, Subpart A, Part 10, Schedule 1 of the TSUS, National Sugar says PP 4463 was intended to protect the interests of domestic sugar producers by creating an economic incentive to purchase domestic sugar. Because imposition of a higher duty on those already contractually bound to buy foreign sugar when PP 4463 issued would not further that intent, National Sugar says the President must have intended by PP 4466 to relieve such persons of the increased duty.

Finally, National Sugar urges that because the first notice of PP 4463, that is, its filing with the Federal Register, occurred after the vessel had sailed from the Dominican Republic, PP 4463 should not be "retroactively" applied.

In response, the Government cites *Westway Trading Corp., Supra.*, in which [2] this court, construing PP 4466, held that "exported to to the United States before 12:01 a.m. * * *, September 21, 1976.", expressed a Presidential intent to exempt only sugar which had finally departed the country of exportation for the United States before that time and date.

National Sugar maintains that *Westway* is either in error or distinguishable because it did not discuss the protection of domestic producers intended in PP 4463. The ultimate issue in *Westway*, however, —construction of PP 4466—was identical to that presented here. [3] We see, and have been shown, no reason to depart from the construction of PP 4466 adopted in *Westway* and applied by judge Boe in this case.

National Sugar's assertion that PP 4466 was intended to provide relief to those who contracted to buy foreign sugar before September 21, 1976, or whose sugar was laded and ready for exportation before that date, is contradicted by the clear language of the proclamation which exempts only sugar "exported to the United States" before 12:01 a.m. on September 21, 1976. The term "exported" has been uniformly interpreted to mean that merchandise so described has actually, finally departed the country of exportation. *See Westway supra. See also Irvine* v. *Redfield*, 64 U.S. 170 (1859); *Sampson* v. *Peaslee*, 61 U.S. 571 (1857). There is no evidence that the President intended a different meaning here. On the contrary, it is reasonable to infer that the President was aware of the uniform interpretation of "exported" when he used that term in PP 4466, and that appropriate language

would have been included if the Presidential intent had been that asserted by National Sugar.

National Sugar says it presents here a question not confronted in *Westway*, that is, how may PP 4463 and PP 4466 be interpreted to insure that both will have their intended effect. It is undisputed that PP 4463 was intended to protect domestic producers. As indicated above and in *Westway*, PP 4466 was intended to exempt only sugar that had been *exported* before 12:01 a.m. on September 21, 1976. If application of PP 4466 to a particular shipment contracted for before the effective date of PP 4463 did not appear to fully meet the protective intent of PP 4463 in that particular instance, it would not necessarily follow that the present interpretation of "exported" creates a conflict between the proclamations. First, secondary purchasers may be led to prefer domestic sugar over that particular shipment because of the higher duty imposed when it was entered. Second, that National Sugar's contract removed it as a purchaser of that amount of sugar on the domestic market at the time of the contract bears no relation to the intent of PP 4463 of protecting domestic producers against entries occurring after its effective date. Finally, [4] nothing in PP 4466 indicates any intent to exempt, for any reason, sugar exported after 12:01 a.m. on September 21, 1976, whether that sugar was earlier contracted for, laden, ready to depart, had its title passed, or was otherwise treated. Thus the present interpretation of PP 4463 and PP 4466 presents no impediment to achievement of the intended effect of both.

[5] That PP 4463 was filed with the Federal Register at 3:39 p.m., and thus after the vessel had sailed, is irrelevant. PP 4463's provision for increased duties was applicable to sugar entered for consumption into the United States and bore no relation to dates of exportation. The sugar here involved was entered for consumption into the United States well after the effective date (September 21, 1976) of PP 4463. Thus PP 4463 was not, as appellant argues, "retroactively" applied to the present entry. The introductory paragraphs of PP 4466 refer to the "effective date" of PP 4463, and the first sentence of the amendment proclaimed in PP 4466 makes the increased duties of PP 4463 applicable to articles entered "on or after September 21, 1976". The provision exempting articles from increased duty on the basis of exportation, however, does not refer to any "effective date" of PP 4463. The exemption provision based on exportation includes a specific date and time before which exportation must have occurred. The provision thus stands on its own and is unaffected by whatever time of day on which the increased duty provisions of PP 4463 became effective.

CONCLUSION

Because the sugar involved here was entered for consumption after the effective date of PP 4463 it was subject to the increased duty imposed by that proclamation. Because the sugar did not depart, i.e., was not exported from, the Dominican Republic until 7:30 a.m., September 21, 1976, it remained subject to the increased duty imposed by PP 4463 and was not exempted by PP 4466. Accordingly, the judgment of the Court of International Trade is *affirmed*.

United States Court of International Trade

One Federal Plaza
New York, N.Y. 10007

Chief Judge

Edward D. Re

Judges

Paul P. Rao
Morgan Ford
Scovel Richardson
Frederick Landis
James L. Watson
Herbert N. Maletz
Bernard Newman
Nils A. Boe

Senior Judge

Samuel M. Rosenstein

Clerk

Joseph E. Lombardi

Decision of the United States Court of International Trade

Slip Op. 81–108

HUTCHINSON BROKERS, INC., A/C THOS. P. GONZALEZ CORP., PLAINTIFF *v.* UNITED STATES, DEFENDANT

Court No. 79–8–01298

Before RE, *Chief Judge*.

CHILI PEPPERS

Chili peppers imported from Mexico were classified as unground anaheim and ancho peppers under item 161.80 of the Tariff Schedules of the United States, and assessed with duty at the rate of 5 cents

per pound. Plaintiff contested the classification claiming that the imported chili peppers were other than anaheim and ancho peppers, and properly classifiable under item A161.83, duty free under the Generalized System of Preferences. Held: Since plaintiff did not succeed in overcoming the presumption of correctness attached to the classification, the action is dismissed.

Common Meaning—Burden of Proof

Plaintiff had the burden of establishing that the imported chili peppers do not fall within the common meaning of the term "anaheim" peppers as claimed. Plaintiff's reliance upon the terminology employed on the invoices that they were "chilaca" chili peppers, and the disputed testimony of its witness, were not sufficient to discharge its burden.

Common Meaning—Expert Testimony

Although the expert testimony regarding nomenclature and characteristics of the imported merchandise was in direct conflict, the court found that the testimony of defendant's witness in support of the presumption that the imported merchandise is within the common meaning of the term "anaheim" peppers, as used in item 161.80 of the tariff schedules, was competent, reliable and credible.

Commercial Designation

Proof of commercial designation is a question of fact to be established in each case. Since plaintiff posited that the commercial meaning of a tariff term differed from its common meaning, plaintiff had the burden of proof on that issue. Thus, plaintiff had the burden of establishing that, as used in the trade at the time of the enactment of the tariff schedules, the term "anaheim" peppers had a meaning which was general (extending over the entire country), definite (certain of understanding), and uniform (the same everywhere in the country). The pronounced differences, among other things, in the nomenclature, distinctions, and characteristics of anaheim chili peppers, offered by both of the expert witnesses, demonstrate that there was no definite, general, and uniform trade understanding of that term.

[Judgment for defendant.]

(Decided November 23, 1981)

Glad & White (*Eduard N. Glad* at the trial; *Steven B. Lehat* on the briefs) for the plaintiff.

J. Paul McGrath, Assistant Attorney General; *Joseph I. Liebman*, Attorney in Charge, International Trade Field Office, Commercial Litigation Branch (*Jerry P. Wiskin* at the trial and on the brief), for the defendant.

RE, *Chief Judge:* The question presented in this case pertains to the proper classification, for customs duty purposes, of certain dried, unground chili peppers imported from Mexico. The merchandise was described on the invoices as "Chili Seco Chilaca" peppers.

The chili peppers were classified by the customs officials as unground anaheim and ancho peppers pursuant to item 161.80 of the Tariff Schedules of the United States. Consequently, they were assessed with duty at the rate of 5 cents per pound.

Plaintiff protests the classification and claims that the merchandise should have been properly classified as other capsicum or cayenne or red peppers, not ground, under item A161.83 of the tariff schedules. If the imported chili peppers are properly classifiable under the claimed provision, they are entitled to be admitted free of duty by virtue of the Generalized System of Preferences.

The pertinent items of the tariff schedules provide as follows:

Schedule 1, Part 11, Subpart B, TSUS:		
Pepper:		
* * * * * * *		
	Capsicum or cayenne or red:	
	Not ground:	
161.80	Anaheim and ancho	5¢ per lb.
* * * * * * *		
A161.83	Other	[Free]

The record consists of the testimony of three witnesses, one called by plaintiff and two by defendant. It also contains twelve exhibits, seven introduced by plaintiff and five by defendant.

At the trial, the parties stipulated that the subject merchandise was not ancho peppers; that the requirements of the Generalized System of Preferences have been met; and that, in order to prevail, plaintiff need only prove that the merchandise is not anaheim peppers.

It was further stipulated that plaintiff's exhibit 6 is a correct translation of the first full paragraph of page 11 of plaintiff's exhibit 5, and that California and California Wonders are two different kinds of peppers.

Plaintiff contends that it has made a *prima facie* showing that the imported chili peppers do not fall within the common meaning, or commercial designation, of the term "anaheim" peppers, but are chilaca peppers, and, further, that defendant has failed to controvert plaintiff's evidence.

Defendant maintains that the chili peppers were properly classified as anaheim peppers, and that plaintiff has failed to establish any commercial designation for them.

As in all customs cases, plaintiff has the burden of overcoming the

statutory presumption of correctness which attaches to the government's classification pursuant to 28 U.S.C. § 2635 (1976). Thus, the question presented is whether plaintiff has borne its burden of proving that the imported chili peppers are other than "anaheim" peppers, as that term is used in item 161.80 of the tariff schedules.

Based upon a careful study of the record, and its assessment of the competency and credibility of the witnesses, the court has concluded that the presumption of correctness attaching to Customs' classification of the imported merchandise has not been rebutted. Plaintiff has not sustained its burden of proving that the classification by Customs was erroneous and that its claimed classification is correct.

It is apparent that the resolution of the issue requires a determination of the common meaning of "anaheim" peppers, as that term is used in item 161.80 of the tariff schedules.

It is fundamental that, in the absence of a special commercial designation, the language of a tariff statute is to be construed in accordance with its common meaning. Further, the common meaning of a word is a matter of law to be determined by the court, and, in making that determination, the court may rely upon its own understanding of the word or term used, and may consult standard lexicographic and scientific authorities. The testimony of witnesses respecting common meaning is advisory only and has no binding effect on the court. *Mattel, Inc.* v. *United States*, 65 Cust. Ct. 616, 619, C.D. 4147 (1970). See also, e.g., *United States* v. *O. Brager-Larsen*, 36 CCPA 1, 3, C.A.D. 388 (1948); *West Coast Cycle Supply Co.* v. *United States*, 66 Cust. Ct. 500, 503, C.D. 4242 (1971).

The evidence of record has been considered by the court in light of the foregoing legal principles.

The witnesses differ as to their respective backgrounds and experience.

Plaintiff's witness, Mr. Thomas P. Gonzalez, since 1954, was president of the Thomas P. Gonzalez Corp., the ultimate consignee. The firm imports and exports agricultural products, including twenty to thirty varieties of chili peppers. As president of the corporation, Mr. Gonzalez is responsible for all of its buying and selling. He has been buying chili peppers such as those at bar for almost fifty years. Mr. Gonzalez is frequently required to travel to Mexico where the various chili pepper varieties are grown. He has become familiar with the varieties of chili peppers by observing them being planted, grown, cultivated, harvested, dried and packed, selected, and cleaned and packed.

Defendant's witness, Dr. Roy M. Nakayama, is professor of horticulture at New Mexico State University. From that university he has a bachelor of science degree in agricultural botany, and a

master's degree from Iowa State University in plant pathology. He also holds a Ph.D. degree in plant breeding, horticulture, and plant pathology from Iowa State University. Dr. Nakayama has authored a number of research reports on the culture and identity of chili peppers, and is a member of the National Pepper Research Workers Group and the American Society for Horticultural Science.

Dr. Nakayama was employed by the California State Department of Agriculture for a period of two years where his primary responsibility was the observation of the planting of crops, including chili peppers, for disease investigations. His specialty encompasses chili pepper research, agricultural practices, chili variety development and identification, and consultation with industry and growers. His grower consultation relates to the culture and identity of different chili varieties. Dr. Nakayama also works with the New Mexico Crop Improvement Association to certify chili varieties as to true name. In the performance of his duties, he has traveled in the United States, some Central and South American countries, and various parts of Mexico. While in Mexico, he has oberved the planting of chili pepper seeds, and has consulted with farmers and others involved in the growing of chili peppers.

The conflicting testimony of the witnesses follows:

Mr. Gonzalez identified plaintiff's exhibits 1 and 2 as chili pepper samples taken from particular entries before the court. He was of the opinion that these samples are chilaca chili peppers. On the other hand, Dr. Nakayama pointed out that it is difficult to determine a chili variety without regional information because of the effect that this circumstance has on the size and shape of a particular variety. However, he stated that, based on texture and color, an identification could be made. Using this criteria, Dr. Nakayama testified that the chili pepper samples in plaintiff's exhibits 1 and 2 belong to the "Anaheim (California)" group of peppers.

In order to identify the particular variety of chili peppers, Mr. Gonzalez testified that one must consider shape, color, pungency, size and price. He stated, however, that the level of maturity of a chili pepper when it is picked will affect its color and size. He added that pungency encompasses both taste and odor, and that price is determined by the amount of color content and heat units which a given chili possesses, i.e., more color content and less heat units usually lead to a higher price.

Dr. Nakayama testified that the factors to be considered in identifying chili peppers include: shape; configuration; length; width; texture of the fresh pod, i.e., rough or indented; dried pod texture, i.e., smooth or wrinkled; and color of the dehydrated pod. Color may be affected by maturity and manner of storage, and storage is capable

of causing color deterioration. A very high dehydration temperature results in a darker than normal color for a given variety of chili peppers.

With respect to anaheim chili peppers, Mr, Gonzalez testified that their seed originated in Anaheim, California, and that most of them are grown in California, and a few in Mexico. He stated that the size of anaheim chili peppers, though variable, is generally the same; they do not vary considerably in shape; and their color ranges from bright red to dark, light, or medium, including reddish brown. Pungency in chili peppers is expressed in scovel heat units of which anaheim peppers have very few. The witness indicated, however, that pungency in itself is not a sufficient criterion for distinguishing between kinds of chili peppers.

In contrast, Dr. Nakayama testified that anaheim chilies are grown commercially in the United States in the central part of Baja, California, and in Sonora State, California, and in Mexico, in the northern part of Chihuahua State. He reaffirmed that anaheim chilies vary considerably in size, shape, and pungency depending upon the area where they are grown. He further testified that the terms "anaheim" and "California" are synonymous in the chili pepper industry; that he has grown anaheim chili peppers, and also what his seed supplier refers to as "Anaheim (California)." The witness stated that in the United States, the term "Anaheim (California)" chili encompasses a pepper which upon drying has a smooth surface with a red to reddish brown color range.

Plaintiff's exhibit 4 was identified as the frontispiece and pages 38 and 39 of a catalogue published by P.S. Petoseed, a commercial seed source, illustrating the anaheim and the college 64L chili peppers. In the opinion of Mr. Gonzalez, the college 64L pepper is the same as the chilaca, except that it is grown in the State of California rather than in Mexico. When asked on cross-examination whether or not he knew that the Petoseed company developed the college 64L pepper, he replied that he did not know who developed it. Also, when asked whether the college 64L pepper was derived from the anaheim pepper, the witness responded that "it could have, in criss-crossing." He added, however, that that circumstance alone would not make it a form of anaheim pepper.

According to Dr. Nakayama, the college 64L pepper was developed by the Petoseed company, and is a strain of the college 64 pepper. He was involved in the development of the college 64 pepper, and had observed the college 64L in its various plantings. He testified that both of these peppers belong to the "Anaheim, California" group of chili peppers. He did not know whether the college 64L and chilaca chilies were the same since he never heard the term "chilaca" used in

the United States or Mexico when referring to chili peppers. In Dr. Nakayama's opinion, if the chilaca pepper were known in the United States as a college 64L pepper, as testified by Mr. Gonzalez, then the chilaca pepper would fall into the anaheim group of chili peppers. He further stated that crossbreeding results in a new variety of chili, different from either parent in physical appearance.

As to the differences between anaheim and chilaca chilies, Mr. Gonzalez testified that they are similar in appearance but different in pungency, size, color, texture and price. He stated that the anaheim chili was larger in length, less pungent, smoother in texture, brighter red in color, and usually more expensive. He emphasized, however, that size, color, and pungency were the most significant differences between the two kinds of chilies.

Defendant's exhibit A was identified by Mr. Gonzalez as the contract of purchase for the merchandise at bar, together with the bank guarantee to the growers for the value of the chili peppers they were to ship. The merchandise is described in the purchase agreement as "Chile Seco Calidad F.R., Pasilla y California," and in the bank guarantee as "Chile Seco Variedades Pasilla y California de Calidad F.R." When asked what varieties of chili peppers are indicated in those documents, Mr. Gonzalez testified that they were pasilla and California chili peppers. In explaining the reference to California chilies in those documents, he stated that the Mexican farmer calls the chilaca chili by that name.

However, Dr. Nakayama testified that he has worked with California chili peppers, and that in the United States the anaheim chili pepper is referred to as a California type pepper. He added that, in regard to chili peppers, the terms "California" and "anaheim" are synonymous.

In an effort to support the testimony of its witness, plaintiff introduced into evidence certain publications. Plaintiff's exhibit 5 is a photocopy of publication No. 15 from the National Institute of Agricultural Investigations in Mexico, dated December 1966, and exhibit 6 is an authenticated translation of the first full paragraph of page 11 of that exhibit. According to this writing, chilaca is one of the principal types and varieties of chili cultivated in Mexico, and anaheim chili is one of the varieties introduced from the United States and now cultivated in Mexico. Plaintiff maintains that this affirms the testimony of Mr. Gonzalez with respect to the differences between anaheim and chilaca chili peppers in the United States market, and, further, that it coincides with the common usage of the term "anaheim" in this country. Consequently, plaintiff argues that the witness' identification of the imported merchandise as "chilaca," and not "anaheim,"

shows *prima facie* that the importations do not fall within the common meaning of the term "anaheim," but are "chilaca."

Plaintiff adds that Mr. Gonzalez' testimony as to the common meaning of "anaheim" versus "chilaca" chilies is further bolstered by exhibit 7, the New Mexico State University booklet entitled *Green Chili Recipe Fiesta*, which states that the anaheim variety of chili from California is mild. Plaintiff asserts that this statement confirms the testimony of its witness to that effect.

In its brief, plaintiff suggests that the testimony of Mr. Gonzalez as to anaheim pungency and growth in Mexico is supported by the *Sunset Mexican Cook Book* (13th printing, December 1973, Lane Books, Menlo Park, Calif.). As to pungency, it states that "the larger the chili the milder the flavor usually is," and "the flavor of California chilies ranges from mild and sweet like a bell pepper, to mildly hot." As to the area of cultivation of California (anaheim) peppers, it states: "These peppers are a variety cultivated principally in the United States and not often seen in Mexico, although very similar types called by several names are grown there." Hence, plaintiff argues that "those chilies which are merely similar do not fall within the common usage of the term Anaheim."

Plaintiff insists that, because of Mr. Gonzalez' long commercial experience in the buying and selling of chili peppers, his testimony should be accorded greater probative value than that of defendant's witness which is based upon scientific meaning which differs from common meaning. Finally, plaintiff submits that the record establishes that the merchandise at bar was invoiced as "Chili Seco Chilaca," and that it was personally sampled and identified by Mr. Gonzalez as being chilaca chili peppers. In this setting, plaintiff contends that it has made a *prima facie* showing that the common meaning of the term "anaheim" chilies does not embrace the imported merchandise.

Defendant emphasizes that inasmuch as Mr. Gonzalez is president of the plaintiff corporation he is an interested witness. Therefore, his testimony is not free from bias, and should be accorded considerably less weight than the testimony of Dr. Nakayama, who is an independent expert. Additionally, the defendant insists that the testimony of Mr. Gonzalez concerning several essential areas in controversy has damaged his entire credibility. In support of this contention, defendant points to the testimony of Mr. Gonzalez in connection with the Petoseed exhibit. It submits that, while it was introduced by plaintiff for the purpose of illustrating that the college 64L and the chilaca chili peppers are the same, as testified by its witness, an examination of the exhibit shows no reference at all to chilaca chilies. Furthermore, on cross-examination, Mr. Gonzalez

admitted that there is no reference in the exhibit that the college 64L pepper is called a chilaca. It is noteworthy that Dr. Nakayama testified that he developed the college 64 pepper, that the college 64L pepper is a strain of the college 64 pepper, and that the college 64L pepper was developed by the Petoseed company. Moreover, Dr. Nakayama testified that the college 64L pepper belongs to the "Anaheim, California" group of chili peppers.

An additional factor undermining the testimony of Mr. Gonzalez, asserts the defendant, is his unsatisfatory attempt to explain the conflict in the description of the imported merchandise on the invoices with that in the contract of purchase and the bank guarantee to the growers. As to this, defendant points to his testimony on cross-examination as follows:

> "Q. Referring back to Exhibit A, Mr. Gonzalez, you testified this covers Pasillas and California. Would you tell the Court what the California is, in that exhibit?—A. Which exhibit?
>
> Q. Exhibit A, your contract of purchase.—A. Well, California, in the State of Northern Lower California, the farmer calls the Chilaca chili, California, and he made the contract and then he invoiced on the base of California, or Chilaca."

Plaintiff failed to produce any evidence to support the explanation of its witness that the chilaca chili pepper is called "California" by the farmer. Moreover, this explanation was categorically refuted by Dr. Nakayama who testified that the terms "California" and "Anaheim" chili peppers are synonymous. Hence, the use of the words "chili * * * California" in the contract of purchase is clearly an admission against plaintiff's interest.

Defendant's exhibits B and C are bags of chili peppers consisting of official samples taken from entry Nos. 127253 and 127361 by Import Specialist Thomas T. Gallagher. These samples were bagged and marked by Mr. Gallagher, and kept in dry storage in Customs' sample locker in San Ysidro for almost a year. The pepper samples were not withdrawn from shipments that are before the court, nor are they representative of the imported merchandise in this action. Mr. Gallagher, called by the defendant as a witness, testified that at Customs he worked with the team that handled plaintiff's line of chili importations. He was familiar with the classification of peppers, and particularly those in defendant's exhibits B and C. He identified the merchandise in these exhibits as coming from shipments for the account of Thomas P. Gonzalez Corp., and testified that on the invoices they were described as "Chilaca," or Chilaca, field run." Although these chili peppers were invoiced as "Chilaca," or "Chilaca, field run," they were identified by Mr. Gonzalez as anaheim chili peppers.

In view of the above, defendant maintains it is apparent that plain-

tiff's witness was unable to discern any distinctions in the peppers in exhibits B and C which would enable him to identify them as chilaca chilies. Moreover, his testimony establishes that even if the imported chili peppers were known as chilaca chilies in Mexico, they would nevertheless, be embraced by the term "anaheim," as set forth in item 161.80 of the tariff schedules.

Careful research reveals that the question presented appears to be of novel impression. It also discloses that there is a paucity of the usual tools or material which aid the court in understanding the nature and characteristics of the merchandise in issue, such as dictionaries, scientific authorities, and other reliable sources, including legislative history and background.

Turning to judicial enlightenment on the classification of dried, unground chili peppers, the court has found one prior judicial determination. While neither of the parties has relied upon the case in support of its position, several aspects, may, nevertheless, provide some guidance here. The case is *Rudolph Miles & Sons, Inc., a/c Thomas P. Gonzalez Corp.* v. *United States*, 79 Cust. Ct. 45, C.D. 4711 (1977), in which the testimony bearing on the issue in question was supplied by the same expert witnesses as in the present case, Mr. Gonzalez on behalf of the plaintiff, and Dr. Nakayama on behalf of the defendant.

In the *Rudolph Miles* case, the dried, unground chili peppers, exported from Mexico, were classified under TSUS item 161.80, the provision for "anaheim and ancho" peppers. The importer claimed that the imported merchandise was properly classifiable as "other" than anaheim and ancho peppers, under TSUS item 161.83. It was conceded by the parties that the merchandise in that case was not anaheim peppers. The question presented therefore was whether the imported peppers were "anchos," as contended by the government, or "pasillas," as claimed by the importer. The court observed that shape and size were admittedly dominant factors in the identification of varieties of chili peppers; that although the evidence in the record was conflicting for the most part, the parties did agree that the ancho variety of chili peppers is characterized by a wideness in body. Indeed, it is called "ancho" because of its shape, the term meaning "wide" in Spanish. The court found that the official samples from the imported peppers revealed a wideness in shape and size that was in conformity with the standard description for ancho peppers, whereas, samples presented by the importer and allegedly taken from the importations before the court revealed a narrowness in shape and size, in conformity with the standard description for pasilla peppers. Relying on the official samples, and the standard description as to size and configuration of the chili peppers contained in the evidentiary exhibits, the court held that the classification of the imported chilies as ancho peppers was

supported by the evidence, and that plaintiff failed to rebut the correctness of the classification.

It is clear from the foregoing that, in determining the correct identification of the variety of the controverted chili peppers, the physical examination of the samples by the court served not only to corroborate the testimony of the witnesses as to their size and configuration, but found support in the standard description of the ancho pepper as supplied by the evidentiary exhibits.

In the case at bar, the parties are not in agreement that the anaheim or chilaca chili pepper is characterized by a particular "wideness," or "narrowness," in body. Nor is it contended by either party that size and shape configuration are the dominant characteristics in the identification of the variety of chili peppers. Furthermore, the testimonial evidence reveals that Mr. Gonzalez testified that the level of maturity of a pepper when it is picked will affect its size. It was also stated by Dr. Nakayama that anaheim peppers vary considerably in size and shape depending upon the area in which they are grown, and that the variety of chili peppers is difficult to determine without regional information. Under these circumstances, it is apparent that without evidence of relationship with the foregoing factors, and none has been adduced by the parties, the samples contained in exhibits 1 and 2 are of little probative value in determining the asserted differences in size, color and pungency between the anaheim and chilaca chili peppers.

Worthy of particular note is the following dictum in *Rudolph Miles:*

> "Moreover, in case of the peppers covered by entry 110939 dated January 29, 1974 of protest 74–11–03241, plaintiff has introduced through Mr. Gonzalez samples which are likewise *said* to be taken from this entry and designated as exhibit 4. However, these samples, characterized by the witness chilaca chilies, exhibit even a starker contrast in terms of size and shape whem compared with exhibit C. A typical specimen from exhibit 4 measures ½ inch at its widest point, and 2¾ inches in length, is flat and, is colored dark red." 79 Cust. Ct. at 49. Emphasis in original.)

This court has examined the samples in exhibits 1 and 2, characterized by Mr. Gonzalez as chilaca chilies, and has noted the physical differences between them and those characterized by Mr. Gonzalez as chilaca chilies in the *Rudolph Miles* case. The examination by the court in *Rudolph Miles* disclosed that a typical specimen from the samples characterized by Mr. Gonzalez as chilaca chilies measured ½ inch in diameter at its widest point, whereas a typical specimen of the chili peppers characterized by him as chilaca in exhibits 1 and 2, measures ½ inches or more in diameter at its widest point. These measurements show substantial differences in the size of imported chili peppers characterized by Mr. Gonzalez as chilaca. It is obvious that the weight

to be accorded to the testimony of plaintiff's witness, that the imported merchandise is chilaca and not anaheim chili peppers, has been seriously impaired.

Plaintiff maintains that in addition to the identification of the imported merchandise as chilaca chili peppers by Mr. Gonzalez, it was designated on the invoices as "Chili Seco Chilaca.

It is well settled that while the invoice description of imported goods may have evidentiary value, it does not finally fix the status, nature or character of an importation. *United States* v. *Rotberg & Krieger*, 24 CCPA 441, 445–46, T.D. 48902 (1937); *Hawley & Letzerich et al.* v. *United States*, 19 CCPA 47, 54, T.D. 44893 (1931); *Prosser* v. *United States*, 1 Cust. Ct. Appls. 29, 31, T.D. 30850 (1910); *The Mundo Corp. et al.* v. *United States*, 56 Cust. Ct. 303, 310, C.D. 2640 (1966). Furthermore, the record shows that the nomenclature on the invoices is at variance with that in the contract of purchase and the bank guarantee to the growers. Additionally, the record discloses that Mr. Gonzalez' explanation of this discrepancy is in direct conflict with that of Dr. Nakayama. Even apart from the question of credibility, it is evident that regional confusion exists with respect to the terminology employed in the chili pepper industry. Under these circumstances it is clear that the invoice description or designation is devoid of any probative value.

Plaintiff's reliance on the literature in evidence, to support the testimony of its witness as to the essential differences between the anaheim and chilaca chili peppers based upon pungency and country of origin, is misplaced. These factors, *per se*, are not germane to the determination of the issue presented, and, even if true, would not preclude the imported merchandise from inclusion within the common meaning of the term "anaheim."

The court does not agree with plaintiff's argument, in its brief, that exhibit 4, the Petoseed catalogue, illustrates the high degree of physical similarity between the anaheim and the college 64L chili peppers, and, therefore, corroborates Mr. Gonzalez' testimony that "the latter variety is synonymous with the chilaca chili grown in Mexico." Plaintiff suggests that implicit in this contention is the premise that, since it appears from the illustration that their differences are subtle, an accurate identification of the varieties of peppers requires the intimate familiarity uniquely possessed by Mr. Gonzalez. The fallacy with this agrument is that an examination of pages 38 and 39 of the Petoseed catalogue, entitled *Standard-Peppers-Hot*, reveals that there is no reference in those pages to the chilaca chili pepper, either by illustration, description, or otherwise.

Beyond this, Dr. Nakayama testified that he is familiar with the college 64L chili pepper; that he has observed it in various field plant-

ings; that he has worked with it and knows it was developed by the Petoseed company. Furthermore, Dr. Nakayama stated that the college 64L pepper is considered a strain of the college 64 pepper which he developed, and that it belongs in the same category as the "Anaheim, California" chili.

The court does not agree with plaintiff's contentions on the classification of the imported merchandise, and gives credence to the testimony of Dr. Nakayama, the defendant's witness. Dr. Nakayama has demonstrated that he is well qualified to testify on the classification question presented, and that his testimony is authoritative, reliable, and credible. To overcome the presumption of correctness which attaches to the classification of the imported merchandise, and the opposing testimony and evidence of record, plaintiff has submitted the personal and self-serving opinion of its president, Mr. Gonzalez. Other than the unsupported personal opinion of Mr. Gonzalez, plaintiff has offered no testimony to establish that the imported merchandise is not embraced within the common meaning of the term "anaheim" as used in item 161.80 of the tariff schedules.

The defendant, on the other hand, did not merely rely upon the statutory presumption of correctness, but submitted competent, reliable and credible affirmative evidence, which the court has found persuasive, to support the presumption that the imported merchandise is within the common meaning of the term "anaheim" within item 161.80 of the tariff schedules.

Based upon a physical examination of the chili pepper samples exemplified in plaintiff's exhibits 1 and 2, Dr. Nakayama testified clearly that the imported merchandise belonged to the anaheim or California type or group of chili peppers. He also stated that the size, shape, pungency and color of chili peppers are peculiar to the area in which they are grown, and that they can vary considerably from area to area depending upon climatic and environmental conditions. Furthermore, although he has traveled in both Mexico and the United States, he has never heard the term "chilaca" applied to a variety of chili peppers.

Plaintiff, in its brief, urges that "should the court conclude that the common meaning of anaheim chilies encompasses the merchandise * * * it has presented evidence sufficient to establish a commercial meaning and such designation must take precedence." Plaintiff submits that the subject merchandise does not fall within the purview of the commercial designation for anaheim chili peppers.

Insofar as plaintiff claims a commercial designation for the term "anaheim" chilies, plaintiff has the burden of establishing that, as used in the trade at the time of the enactment of the tariff schedules, that term had a meaning which was general (extending over the entire

country), definite (certain of understanding), and uniform (the same everywhere in the country). *Moscahlades Bros., Inc.* v. *United States*, 42 CCPA 78, C.A.D. 575 (1954); *United States* v. *M. & D. Miller, Inc.*, 41 CCPA 226, C.A.D. 556 (1954); *Nylos Trading Co.* v. *United States*, 37 CCPA 71, C.A.D. 422 (1949). Thus, the rule of commercial designation "was intended to apply to cases where the trade designation is so universal and well understood that the Congress, and all the trade, are supposed to have been fully acquainted with the practice at the time the law was enacted." *Jas. Akeroyd & Co. et al.* v. *United States*, 15 Ct. Cust. Appls. 440, 443, T.D. 42641 (1928). See also *United States* v. *Fung Chong Co.*, 34 CCPA 40, 42, C.A.D. 342 (1946).

In support of its position, plaintiff points to the nationwide experience of Mr. Gonzalez in the buying and selling of chili peppers. It argues, therefore, that when he describes the distinctions between the anaheim and chilaca chili peppers, such description can be said to be general because of its wide circulation in commerce. Plaintiff also contends that the term "anaheim" has definite application as demonstrated by the specific illustrations and descriptive data in plaintiff's exhibit 4 and defendant's exhibit E, published by commercial seed companies. Finally, the plaintiff urges that the nationwide scope of the literature, and the testimony of its witness, "highlights a uniform understanding throughout the country."

Implicit in the rule of "commercial designation" is the premise that the trade understanding of the tariff term differs from the common meaning. Stated otherwise, the doctrine has no application where the commercial and common meanings are the same. *Stephen Rug Mills* v. *United States*, 32 CCPA 110, C.A.D. 293 (1944); *Draeger Shipping Co.* v. *United States*, 15 Ct. Cust. Appls. 190, T.D. 42234 (1927).

It is to be noted that plaintiff's posture concerning the issue of commercial meaning has been equivocal. Thus, in its complaint, and at the trial, plaintiff presented no claim or evidence of a commercial designation that differed from the common meaning of the term "anaheim" chili peppers. However, in its post trial brief, plaintiff for the first time suggests the possibility that the commercial meaning of the term in issue is basically different from its common meaning.

Nevertheless, based on the present record, the plaintiff has failed to sustain its burden of establishing a commercial meaning different from the common meaning of the term "anaheim." With respect to proof of the fundamental elements of commercial designation, the record is almost entirely limited to the experience of Mr. Gonzalez in the buying and selling of chili peppers. Indeed, the pronounced differences, among other things, in the nomenclature, distinctions, and characteristics of anaheim chili peppers, offered by both of the

expert witnesses, demonstrate that there was no definite, general, and uniform trade understanding of that term. The record falls far short of establishing, by competent evidence, that the merchandise at bar is generally, uniformly and definitely recognized throughout the trade in this country by a commercial designation which would preclude its classification as anaheim peppers under item 161.80 of the tariff schedules.

For all the foregoing reasons, it is the determination of the court that the presumption of correctness attaching to the classification by Customs has not been overcome, and the action is dismissed.

Judgment will enter accordingly.

(Slip Op. 81–109)

DANT & RUSSELL INC., PLAINTIFF *v.* UNITED STATES, DEFENDANT

Court No. 80–9–01473

Before FORD, *Judge.*

On Plaintiff's Motion and Defendant's Cross-Motion for Summary Judgment

[Judgment for defendant.]

(Decided November 23, 1981)

Glad & White (*Edward N. Glad* of counsel) for the plaintiff.

J. Paul McGrath, Assistant Attorney General; *Joseph I. Liebman*, Attorney in Charge, International Trade Field Office, Commercial Litigation Branch (*Robert H. White* on the brief), for the defendant.

FORD, *Judge:* This action presents for determination the proper classification, for customs duty purposes, of certain hardwood flooring. The entries covering the importations involved were originally liquidated as presently claimed. The oak flooring was liquidated under item 202.56, TSUS, while the birch and maple flooring were liquidated under item 202.58, TSUS. Customs voluntarily reliquidated the entries within the time prescribed by 19 U.S.C. § 1501 under item 202.60 as other wood flooring.

The imported merchandise, known as "Miyata-Plank" is hardwood manufactured to accurate dimensions, measuring 15mm x 1′ x 6′, precision edge tongued, grooved and end notched. It is manufactured by gluing oak, maple or birch to 5-ply lauan substrata and is used for wood flooring.

Plaintiff's motion for summary judgment is predicated upon facts contained in the affidavit of Kit Draham, manager of the import department of plaintiff corporation, and a catalog sheet attached thereto. Defendant's cross motion for summary judgment is supported by affidavits of A. M. Baldassarri, vice president of Pan Pacific Overseas, an importer of wood products, and Paul Garretto, National Import Specialist at New York. In addition, defendant offered four samples of the imported merchandise as well as descriptive materials which were supplied by plaintiff. Defendant alternatively contends if any issue of fact is raised by the affidavits the motions of the parties should be denied and the matter set down for trial.

The classification (actually the reclassification) under item 202.60, *supra*, carries with it the presumption that the imported merchandise consists of wood flooring within the language contained in the superior heading preceding items 202.56–202.60 which reads as follows:

	Wood flooring, whether in strips, planks, blocks, assembled sections or units, or other forms, and whether or not drilled or treated (except softwood flooring classifiable as lumber):	
	Hardwood flooring in strips and planks, whether or not drilled or treated:	
202.56	Oak (*Quercus* spp.)	3.5% ad val.
202.58	Other	Free
	* * * * * * *	
202.60	Other	7.4% ad val.

In view of the foregoing, the sole issue of law presented by plaintiff is whether the imported flooring consists of strips or planks. Defendant contends the imported merchandise consists of plywood flooring and, as such, is subject to classification under item 202.60, *supra*. Defendant alleges further that the classification is supported by the legislative history.

Plaintiff upon *D. B. Frampton & Company, Dorf International, Inc.* v. *United States*, 60 Cust. Ct. 4, C.D. 3243 (1968), which held certain maple flooring to fall within the purview of item 202.57, TSUS. The merchandise was in plank form, assembled from strips fitted together and fastened laterally and machined to exact dimensions. The flooring was both tongued and grooved. It was used exclusively for railroad car flooring and known in the railroad industry as plank flooring. Accordingly, the court held the imported merchandise to be hardwood flooring in strips and planks, assembled sections or units or other forms. The court reasoned that the provision claimed being *eo nomine* in-

cluded, in the absence of legislative intent, all forms of the article as long as it is recognizable as such. Therefore, a plank, whether conventional or assembled, falls within item 202.57, *supra*. In addition, in *Frampton* the evidence established the merchandise was known as plank flooring or flooring plank and the government conceded it was in plank form.

The supporting affidavits for the motion and cross motion are contradictory. However, the legislative history is supportive of the classification and is set forth in the *Tariff Classification Study*, Schedule 2, page 22, as follows:

> Item 202.60 covers "other" wood flooring (except softwood flooring classifiable as lumber). This provision is derived from paragraphs 402, 404, and 412. This flooring is in blocks, assembled sections or units, or other forms, and includes short strips of accurately milled wood, either separate, in sets, or assembled in sections for parquet and similar types of patterned floors. It also includes preassembled sections of strip flooring.

Additionally, further support of the classification is found in the *Summaries of Trade and Tariff Information* (1967), Schedule 2, Volume 1, pages 117–118:[1]

> Laminated block flooring is essentially a small square of plywood (i.e., laminated veneers), often 9 x 9 inches and $^{15}/_{32}$ inch thick. Assembled sections or units of block flooring, also provided for in item 202.60 consist of (1) sets of an even number of squares (unit or laminated) fastened together so that the grain of each square forms a checkerboard or parquetry pattern in the completed panel, and (2) sets of "slat-block" flooring, each set made up of four or more smaller squares formed from narrow slats or strips.

Representative samples of the imported merchandise may be considered potent witnesses. *Marshall Field & Co.* v. *United States*, 45 CCPA 72, C.A.D. 676 (1958). Examination of the imported merchandise and the facts relating to its construction is clearly indicative of the nature of this merchandise. The imported articles are laminated or plywood flooring. There is insufficient evidence to establish them to belong to the class or kind of flooring known as planks or strips. Since they are laminated, they fall within the purview of item 202.60, *supra*, as classified. Accordingly, plaintiff's motion for summary judgment is denied, and defendant's cross-motion is granted.

Judgment will be entered accordingly.

---

[1] While not legislative history, the Summaries are useful as a guide of the administrative practice of the Customs Service.

(Slip Op. 81–110)

CONNORS STEEL COMPANY, PLAINTIFF *v.* THE UNITED STATES, DEFENDANT

Before WATSON, *Judge.*

Court No. 80–3–00478

Cross Motions For Review on the Administrative Record of a Determination by the Secretary of the Treasury That Imported Steel Beams Were Not Being Sold At Less Than Fair Value

In reaching his determination that certain steel beams from Belgium were not being sold here at less than fair value, the Secretary of the Treasury did not act in accordance with the law. He failed to extend the investigation to the question of whether sales in the foreign home market for home consumption (used to validate the sale prices to the United States) were at prices representing less than the cost of production. The Court's analysis of the Antidumping Act, particularly 19 U.S.C. § 164(b)(1976), and its review of the administrative record show that further investigation was required by the law.

[Remanded with instructions to the Secretary of Commerce]

(Decided November 24, 1981)

Harris, Berg and Creskoff (*R. Christian Berg* on the brief) for the plaintiff.

J. Paul McGrath, Assistant Attorney General, *David M. Cohen*, Branch Director, Commercial Litigation Branch (*Velta A. Melnbrencis* on the brief) for the defendant.

Graubard Moskovitz McGoldrick Dannet and Horowitz (*Michael H. Greenberg* and *Charles L. Rosenzweig* on the brief) for *amicus curiae* Cockerill-Sambre, S.A. and Cockerill-Stinnes Steel Corporation.

WATSON, *Judge:* The plaintiff, Connors Steel Corporation (Connors), brought this action under 19 U.S.C. § 1516(d) (1976) to contest a final determination made by the Secretary of the Treasury in September of 1979 [1] that certain steel I-beams from Belgium were *not* being sold here at less than fair value. That determination ended an investigation under the Antidumping Act of 1921, as amended, 19 U.S.C. § 160, et seq., (1976). The investigation had begun in February of 1979, following a petition by Connors alleging that importations of steel beams were being sold in the United States at less than fair value and were

[1] 44 Fed. Reg. 54579–81. Under the statute, the investigation of whether the sales were at less than fair value had two stages, a tentative determination (which normally had to be made within six months) and a final determination within three months thereafter. In this proceeding, the tentative determination was made in four months and the final determination followed three months later. At both stages, the Secretary of the Treasury concluded that sales were not being made at less than fair value.

causing injury to a United States industry. The subject of the petition and the investigation were steel I-beams manufactured in Belgium by Cockerill-Ougree-Providence et Esperance-Longdoy, S.A. (now Cockerill-Sambre, S.A.).[2]

The matter is now before the Court for decision on cross motions for judgment on the administrative record under Rule 56.1 of the Rules of the Court. An *amicus curiae* brief has been filed by the manufacturer of the beams, Cockerill-Sambre S.A. (Cockerill) and the importer, Cockerill-Stinnes Steel Corporation (CSSC).

The investigation of whether this class of articles was being sold here at less than fair value was the first part of the process of determining whether antidumping duties should be assessed. If sales at less than fair value had been found, the matter would have gone to the International Trade Commission for a determination of whether the relevant industry had been injured. 19 U.S.C. § 160(a) (1976).[3]

The Secretary's conclusion was based on a finding that the sale price to the United States was not less than the price in the Belgian home market for home consumption. Reference to the home market sales in Belgium for vindication of the fairness of the sale price to the United States was based on the following sequence of provisions in the statute: 19 U.S.C. § 160(c)(1) (1976)[4] mandated an investigation of whether the sales to the United States were at less than fair value. 19 U.S.C. § 160(b)(1)(A) (1976)[5] stated the obligation to determine whether the price was less than foreign market value. This in turn led

---

[2] The beams were identified as hot-rolled steel I-beams, with symmetrical flanges or with one or more flanges offset, less than six inches in height and weighing not over 4½ pounds perlineal foot. They were further identified as being provided for under Item 609.80 of the Tariff Schedules of the United States.

[3] § 160. *Foreign merchandise sold or likely to be sold at less than fair value:*

(a) Whenever the Secretary of the Treasury (hereinafter called the "Secretary") determines that a less than its fair value, he shall so advise the United States International Trade Commission (hereinafter called the "Commission") and the Commission shall determine within three months thereafter whether an industry in the United States is being or is likely to be injured, or is prevented from being established, by reason of the importation of such merchandise into the United States. The Commission, after such investigation as it deems necessary, shall notify the Secretary of its determination, and if that determination is in the affirmative, the Secretary shall make public a notice (hereinafter in sections 160 to 171 of this title called a "finding") of his determination and the determination of the Commission.

[4] (c)(1) The Secretary shall, within thirty days of the receipt of information alleging that a particular class or kind of merchandise is being or is likely to be sold in the United States or elsewhere at less than its fair value and that an industry in the United States is being or is likely to be injured, or is prevented from being established by reason of the importation of such merchandise into the United States, determine whether to initiate an investigation into the question of whether such merchandise in fact is being or is likely to be sold in the United States or elsewhere at less than its fair value. If his determination is affirmative he shall publish notice of the initiation of such an investigation in the Federal Register. If it is negative, the inquiry shall be closed.

[5] (b)(1) In the case of any imported merchandise of a class or kind as to which the Secretary has not so made public a finding, he shall, within six months after the publication under subsection (c)(1) of a notice of initiation of an investigation—

(A) determine whether there is reason to believe or suspect, from the invoice or other papers or from information presented to him or to any other person to whom authority under this section has been delegated, that the purchase price is less, or that the exporter's sales price is less or likely to be less, than the foreign market value (or, in the absence of such value, than the constructed value);

to 19 U.S.C. § 164(a) (1976)[6] which, broadly speaking, defines foreign market value as the price for home consumption.

Plaintiff argues that various aspects of the decision were not supported by substantial evidence and were not done in accordance with the law.[7] It began by attacking the determination of home market sales in Belgium on four grounds: first, for an alleged failure to investigate whether the sales were actually for home consumption; second, for allegedly not being directed at sales which were on a "level of trade" comparable to the sales to the U.S.; third, for including sales to a related company; and fourth, for being so small in number as to be inadequate for purposes of comparison.

The Court finds no deficiency in these four aspects of the administrative determination. The responses of Cockerill and the destinations shown on some of the supporting invoices were sufficient to substantiate the finding that sales of these articles were made for home consumption in the Belgian market as required by 19 U.S.C. § 164(a). In the absence of any contrary or inconsistent information there was no obligation to probe more deeply on this point.

Secondly, the necessity to investigate whether a difference in "levels of trade" existed between the Belgian sales and the U.S. sales did not arise. The statute requires that the home market sales used for comparison must be in the usual wholesale quantity and in the ordinary course of trade. 19 U.S.C. § 164(a) (1976). The response from Cockerill that its prices in the two markets did not vary according to class of purchaser and that it did not offer quantity discounts was sufficient, absent any conflicting information, to make further investigation on this point unnecessary. The mere fact that average quantities were lower in the sales in Belgium does not contradict a finding that the sales were comparable under the statute.

Thirdly, as to the fact that 50 percent of the home market sales were to a related company, it need only be stated that the law does

---

[6] § 164. *Foreign market value:*

(a) For the purposes of sections 160 to 171 of this title the foreign market value of imported merchandise shall be the price, at the time of exportation of such merchandise to the United States, at which such or similar merchandise is sold or, in the absence of sales, offered for sale in the principal markets of the country from which exported, in the usual wholesale quantity and in the ordinary course of trade for home consumption or, if not sold or offered for sale for home consumption, or if the Secretary determines that the quantity sold for home consumption is so small in relation to the quantity sold for exportation to countries other than the United States as to form an inadequate basis for comparison, then the price at which so sold or offered for sale for exportation to countries other than the United States), plus, when not included in such price, the cost of all containers and coverings and all other costs, charges and expenses incident to placing the merchandise in condition packed ready for shipment to the United States, except that in the case of merchandise purchased or agreed to be purchased by the person by whom or for whose account the merchandise is imported, prior to the time of exportation, the foreign market value shall be ascertained as of the date of such purchase or agreement to purchase. In the ascertainment of foreign market value for the purposes of sections 160 to 171 of this title no pretended sale or offer for sale, and no sale or offer for sale intended to establish a fictitious market, shall be taken into account. If such or similar merchandise is sold or in the absence of sales, offered for sale through a sales agency or other organization related to the seller in any of the respects described in section 165 of this title, the prices at which such or similar merchandise is sold or, in the absence of sales, offered for sale by such sales agency or other organization may be used in determining the foreign market value.

[7] The Court had previously determined that this would be the standard of review. *Connors Steel Co.* v. *United States*, 1 CIT ——, Slip Op. 81-3 (1981).

not remove sales to a related purchaser from consideration as part of home market sales. Common sense, of course, would indicate that strictly by themselves sales to a related purchaser would be a questionable guarantee of a fair home market price. However, if they are made at the same price as sales to independent purchasers, there is no reason why they cannot form part of the total quantity of home market sales used as a benchmark.

Fourthly, in the abstract there is no defect in the amount of sales relied on by the Secretary. The total sales for home consumption amounted to 6 percent of sales for export to countries other than the United States. Although this percentage is at the lower end of the scale, the Court cannot say that it would be an inadequate basis for comparison as a matter of law under 19 U.S.C. § 164(a) (1976). However, these are small percentages and the relative narrowness of the base they provide means that the possibility of a need for further investigation could not be foreclosed. When it is realized that the entire calculation ultimately depends on the 3 percent of sales represented by sales to independent parties, the fragility of the comparison is troubling, if not defective.

This brings the Court to plaintiff's most effective argument. Plaintiff attacks the Secretary's failure to investigate whether home market sales were below cost of production as provided for in 19 U.S.C. § 164(b) (1976). That provision reads as follows:

> (b) Whenever the Secretary has reasonable grounds to believe or suspect that sales in the home market of the country of exportation, or, as appropriate, to countries other than the United States, have been made at prices which represent less than the cost of producing the merchandise in question, he shall determine whether, in fact, such sales were made at less than the cost of producing the merchandise. If the Secretary determines that sales made at less than cost of production (1) have been made over an extended period of time and in substantial quantities, and (2) are not at prices which permit recovery of all costs within a reasonable period of time in the normal course of trade, such sales shall be disregarded in the determination of foreign market value. Whenever sales are disregarded by virtue of having been made at less than the cost of production and the remaining sales, made at not less than cost of production, are determined to be inadequate as a basis for the determination of foreign market value, the Secretary shall determine that no foreign market value exists and employ the constructed value of the merchandise in question.

Although the Court agrees that the duty described in this provision did not arise here at the very beginning of the investigation, at a later stage it became unavoidable. The original petition focused on the overall necessity for a "less than fair value" determination. As

will be further discussed, it contained some information which could have justified investigative suspicion of Cockerill's home market sale price. However, at that stage, the Court does not believe it is reasonable to posit a general duty of the agency to independently explore all the implications of the information supplied.

The sequence of events which gave rise to the duty to extend the investigation to Cockerill's cost of production occurred after the June 13, 1979 tentative determination that sales to the United States had not been made at less than fair value. 44 Fed. Reg. 33997 (1979).

Approximately 51 days before the date of the final decision, plaintiff for the first time called the attention of the agency to the necessity for a cost of production determination. In a pre-conference brief filed on July 24, 1979 it argued that the Customs Service had erred in not going beyond its examination of sales in Belgium to investigate the possibility that those sales were at less than cost of production. [Document 80 in the Public File] It cited in support its allegations that Cockerill's production was subsidized and it supplied information tending to show that Cockerill's sale price was below Connors' cost of production. At an administrative hearing on July 31, 1979 Connors added as support for the necessity of a cost of production determination an argument based on a constructed trigger price which it had included in its original petition. It reasoned that if Cockerill's sale price was below a constructed trigger price it was presumptively below its cost of production.

The final determination of the Secretary addressed these matters as follows:

> Counsel for petitioner has claimed that Customs should have investigated the possibility of sales below the cost of production within the meaning of section 205(b) of the Act [19 U.S.C § 164(b)], based, *inter alia*, upon petitioner's allegation of subsidization from the Government of Belgium and the European Communities. An allegation of subsidization does not adequately place in issue sales below the cost of production under the Antidumping Act; to the contrary, to the extent a producer's production or sales are subsidized, *its* cost of production may be lessened or its sales revenues increased. Other information presented by counsel for petitioner relevant to the cost of production of certain steel I-beams from Belgium, was presented too late to be considered.

The Court finds that when plaintiff brought the attention of the agency to the need for a cost of production determination, the agency had a reasonable basis to believe or suspect that sales in the home market were at prices representing less than the cost of production. It had a statutory duty to inquire further, and sufficient time to do so. That duty could not be avoided except for the most compelling reasons and the unsupported assertion that it was too late is entirely inade-

quate. The impossibility of completing the investigation must be substantiated in the record. Consequently, the Secretary's failure to investigate further was not in accordance with the law.

The government argues that Connors presented no evidence directly from Cockerill's costs. This suggests an ingenuous and erroneous standard for proceeding with a cost of production inquiry. On its face, it is unreasonable to expect a party to produce data directly from the costs of production of a competitor. There were at least two significant pieces of information relied on by Connors, and one supplementary matter contained in the record, which provided more than a reasonable basis to proceed.

In urging a cost of production inquiry, Connors relied on a "trigger price" which it had constructed from the government's trigger price for slightly larger beams. It had earlier used this material in its petition as general support for a dumping investigation. The government's trigger price was a device established to monitor imports of steel. 42 Fed. Reg. 65215. It was based on the costs of production of Japanese steelmakers who are considered to be the most efficient steel producers in the world. Prices lower than the trigger prices were to be subject to an increased likelihood of investigation for possible dumping. See generally, *Davis Walker Corporation* v. *Blumenthal*, 460 F. Supp. 283 (D.D.C. 1978). Connors modified the trigger price for similar beam by adding extra charges to account for the lighter weight, shorter length and greater strength of these beams. The methodology it utilized is plausible and the resulting conclusion is certainly sufficient to raise the question of whether Cockerill's home market price was below what would be the cost of production of the world's most efficient producers.

The government argues that even assuming the legitimacy of this constructed "trigger price," it would have no purpose other than to increase the likelihood that an antidumping investigation would be started, and should be discarded after that. This, however, is an unjustifiably restrictive view. We are not concerned here with the narrow purpose for which trigger prices were created but rather with the permissible inferences and suspicions to which they may give rise. It is plainly suspicious to find a sale price which may be below the cost of production of the world's most efficient producers. Obviously this does not prove that the price was below Cockerill's cost of production, but it does represent a reasonable basis to extend an investigative process.

In addition, Connors offered proof of its own costs of production to show, in conjunction with its claim to approximately the same

efficiency of production,[8] that Cockerill's sale price was below Connors' cost of production. From this, it would not be unreasonable to surmise that costs and efficiencies of production being approximately equal, Cockerill was selling at a price below its cost of production.

One other piece of information was in the administrative record but was not pointed out or discussed until this judicial review. A general statement appears in Cockerill's 1977 Annual Report that on various occasions, in order to maintain activity in its plants, it had accepted orders whose price did not cover fixed production expenses. [Public Document No. 65, p. 14] Although the government is correct in saying that this does not prove anything about the specific transactions at issue, it certainly should have contributed to the level of investigative curiosity.

When the preceding points are considered in conjunction with the relative sparsity of the home market sales upon which the Secretary relied and the rigorous investigative mandate of the statute, the conclusion becomes irresistible that the investigation should have continued into cost of production.

As a whole this statute displays a notable encouragement to the exercise of investigative powers and authority on minimal information. The entire determination of whether sales are being made at less than foreign market value or home market value is based on whether there is reason to believe or suspect that to be the case. 19 U.S.C. § 160(b)(1)(A) (1976).

The duty expressed in 19 U.S.C. § 164(b) (1976) to go beyond home market sales for comparison purposes arises during the course of an ongoing investigation. It represents merely an incremental development in the investigation, which ought to require less justification than is required to begin the investigation itself. In fact, the standard expressed is one which is distinctly conducive to proceeding on the basis of conjecture. It is even less than the probable cause needed for a search warrant and closer to the standard which allows a party to make discovery in a judicial proceeding. See generally, *De Masters* v. *Arend*, 313 F. 2d 79, 88 (9th Cir. 1963) *cert. dismissed* 375 U.S. 936 (1963). See also, *United States* v. *Powell*, 379 U.S. 48, 57 (1964).

Congress added the duty to investigate cost of production out of a keen awareness of the fallibility of home market sales prices. In its explanation of the amendment adding 19 U.S.C. § 164(b) to the Trade Act of 1974, the Senate Finance Committee stated:

---

[8] In its administrative complaint Connors claimed greater efficiency in the melt stage, for its continuous cast billet system and higher worker productivity. It acknowledged an advantage to Cockerill in the hot rolling portion of production.

> The Committee is concerned that, in the absence of such a provision, sales uniformly made at less than cost of production could escape the purview of the Act, and thereby cause injury to United States industry with impunity. [9]

If anything, the administrative agency ought to be receptive to the need for a cost of production inquiry as the soundest possible verification in questionable circumstances. This is not an area in which the agency has broad discretion to refrain from investigating. That sort of discretion may exist in situations where the investigative methods are amorphous. See for example, *General Motors* v. *Federal Energy Regulatory Commission*, 613 F. 2d 939 (D.C. Cir. 1979). Here, however, Congress has seen fit to provide extremely detailed guidance for the commencement and conduct of the investigation.

There is nothing in the statutory scheme to show that a significant development or change in the investigation cannot take place in the final three-month period. There is nothing in the law which limits that final period to mere tinkering with the tentative determination and nothing to prevent the final determination from reaching a contrary conclusion.

When a reasonable basis was supplied the Secretary had a duty to investigate further. He could not set unreasonable standards by demanding direct proof and he could not refrain from investigating further simply because it was the second stage of the investigation or because of unsupported conclusions about what could be accomplished in the time remaining.

Before concluding, the Court touches on a few subsidiary matters. The government was correct in stating that the allegation that production was being subsidized did not give rise to an obligation to extend the investigation into cost of production. A subsidy would not imply that the sales are below cost of production and there is no authority for the elimination of a subsidy in calculating cost of production, as was proposed by plaintiff.

In a related matter, plaintiff's claim that the Secretary should have begun a countervailing duty investigation in response to the subsidy allegations made in this administrative proceeding is outside the scope of this review. This action is limited to a review of the antidumping investigation. The Secretary's obligations under other statutes are not before the Court.

The Court makes one final comment on the matter of subsidization. The Secretary's decision suggested that, if anything, subsidization would lessen cost of production. This reasoning was correct. However, if it implied that the existence of a subsidy is a factor which

---

[9] S. Rep. No. 93-1298, 93d Cong., 2d Sess., 173 (1974).

will weigh against the conduct of an inquiry into whether a home market sales price is below cost of production, it must be criticized.

It is one thing to reject subsidization as a ground for probing cost of production. It is another thing to let it be a defense against the conduct of such a probe. In the latter case, it would offend public policy if conduct putatively in violation of the countervailing duty law served as a defense to the completion of an investigation under the antidumping law. For this reason the existence of a subsidy on production ought to have no part in the decision on whether to carry the investigation beyond home market sales. Of course, if the actual calculation of cost of production is reached, the relevant subsidies cannot be ignored.

For the reasons discussed earlier, the Court finds that the failure to extend the investigation in the manner prescribed by 19 U.S.C. § 164(b) was not in accordance with the law. The proper remedy is to require the correct completion of the administrative proceeding and not, as plaintiff suggests, to require a new proceeding entirely. However, since the Secretary of Commerce now has administrative responsibility in this area, the matter will be remanded to him.[10]

It is therefore Ordered that the Secretary of Commerce shall conduct an investigation into whether the sales of these beams in the home market were at prices representing less than their cost of production and shall report his findings to the Court within 120 days from the date of this decision.

---

[10] The duties of the Secretary of the Treasury in these matters were transferred to the Secretary of Commerce pursuant to Reorg. Plan No. 3 of 1979, § 5(a)(1)(C), 44 Fed. Reg. 69275, 93 Stat. 1381, eff. Jan. 2, 1980, as provided by section 1-107(a) of Ex. Ord. No. 12188, January 2, 1980, 45 Fed. Reg. 993.

Decisions of the United States Court of International Trade

Abstracts

Abstracted Protest Decision

DEPARTMENT OF THE TREASURY, *December 1, 1981.*

The following abstracts of decisions of the United States Court of International Trade at New York are published for the information and guidance of officers of the Customs and others concerned. Although the decisions are not of sufficient general interest to print in full, the summary herein given will be of assistance to Customs officials in easily locating cases and tracing important facts.

WILLIAM VON RAAB,
Commissioner of Customs.

DECISION NUMBER	JUDGE & DATE OF DECISION	PLAINTIFF	COURT NO.	ASSESSED	HELD	BASIS	PORT OF ENTRY AND MERCHANDISE
				Par. or Item No. and Rate	Par. or Item No. and Rate		
P81/186	Boe, J. November 24, 1981	Corporation Sublistatica, S.A.	78-2-00240, etc.	Item 406.50 20%	Item 405.10 1.7¢ per lb. + 11%	Corporacion Sublistatica, S.A. v. U.S. (Slip Op. 81-6)	San Juan Dyes for transfer, ink powders, etc.

Decisions of the United States Court of International Trade

Abstracts

Abstracted Reappraisement Decisions

DECISION NUMBER	JUDGE & DATE OF DECISION	PLAINTIFF	COURT NO.	BASIS OF VALUATION	HELD VALUE	BASIS	PORT OF ENTRY AND MERCHANDISE
R81/441	Watson, J. November 25, 1981	American Thermo-Ware Co.	277277–A, etc.	Export value	F.o.b. unit invoice prices plus 20% of difference between f.o.b. unit invoice prices and appraised values	Agreed statement of facts	New York Binoculars
R81/442	Watson, J. November 25, 1981	Astra Trading Corp.	260838–A, etc.	Export value	F.o.b. unit invoice prices plus 20% of difference between f.o.b. unit invoice prices and appraised values	Agreed statement of facts	New York Binoculars

R81/443	Watson, J. November 25, 1981	Astra Trading Corp.	267774-A, etc.	Export value	F.o.b. unit invoice prices plus 20% of difference between f.o.b. unit invoice prices and appraised values	Agreed statement of facts	New York Binoculars
R81/444	Watson, J. November 25, 1981	Astra Trading Corp.	268952-A, etc.	Export value	F.o.b. unit invoice prices plus 20% of difference between f.o.b. unit invoice prices and appraised values	Agreed statement of facts	New York Binoculars
R81/445	Watson, J. November 25, 1981	Astra Trading Corp.	269636-A, etc.	Export value	F.o.b. unit invoice prices plus 20% of difference between f.o.b. unit invoice prices and appraised values	Agreed statement of facts	New York Binoculars
R81/446	Watson, J. November 25, 1981	Astra Trading Corp.	298190-A, etc.	Export value	F.o.b. unit invoice prices plus 20% of difference between f.o.b. unit invoice prices and appraised values	Agreed statement of facts	New York Binoculars
R81/447	Watson, J. November 25, 1981	Compass Instrument & Optical Co., Inc.	277537-A, etc.	Export value	F.o.b. unit invoice prices plus 20% of difference between f.o.b. unit invoice prices and appraised values	Agreed statement of facts	New York Binoculars

DECISION NUMBER	JUDGE & DATE OF DECISION	PLAINTIFF	COURT NO.	BASIS OF VALUATION	HELD VALUE	BASIS	PORT OF ENTRY AND MERCHANDISE
R81/448	Watson, J. November 25, 1981	Mitsubishi International Corporation	79-7-01136, etc.	American selling price	Appraised values less 23%, per pair	Agreed statement of facts	Los Angeles Footwear
R81/449	Watson, J. November 25, 1981	Samuel Brilliant Company	76-5-01176, etc.	American selling price	Appraised values less 20%, per pair	Agreed statement of facts	Boston Canvas footwear
R81/450	Watson, J. November 25, 1981	Samuel Brilliant Company	76-5-01181, etc.	American selling price	Appraised values less 20%, per pair	Agreed statement of facts	Boston Canvas footwear

Order Amending Memorandum and Order

NOVEMBER 6, 1981

NAKAJIMA ALL CO., LTD. *v.* UNITED STATES; Smith-Corona Group, Consumer Products Division, SCM Corporation, intervenor, Court No. 80–6–00933. On plaintiff's unopposed motion for clarification, memorandum and order, Slip Op. 81–95, dated October 26, 1981, amended to add the following:

WHEREAS,

(a) the information contained in Exhibits D and E to the "Response to Nakajima All, Ltd. to Antidumping Questionnaire" ("Response to Questionnaire") appears on pages 11 to 16 of the Response to Questionnaire;

(b) the Response to Questionnaire (including pages 11–16 and Exhibits D and E) is reproduced as Exhibit A to the "Reports of Investigation" contained in the confidential portion of the Record filed in this case by the Department of Commerce;

(c) Exhibit D is reproduced as Exhibit R to said "Reports of Investigation"; and

(d) Exhibits D and E may appear in other confidential documents;

defendant shall not disclose said information to intervenor, and, when making documents available to intervenor, shall indicate which documents have been redacted to exclude Exhibits D and E or the information contained therein.

Motion To Vacate and Dismiss

NOVEMBER 5, 1981

ASSOCIATED DRY GOODS CORPORATION *v.* UNITED STATES, Court No. 81–4–00375.—Quota on Wool Sweaters.—Slip Op. 81–70. Motion by defendant for an order vacating Slip Op. 81–70 and dismissing action for mootness in light of October 13, 1981 order of Court of Customs and Patent Appeals which remanded the causes covered by Customs Appeals Nos. 81–30 and 81–33 and arising from Slip Op. 81–70 to this court for further appropriate action.

International Trade Commission Notices

Investigations by the U.S. International Trade Commission

DEPARTMENT OF THE TREASURY, DECEMBER 10, 1981

The appended notices relating to investigations by the U.S. International Trade Commission are published for the information of Customs officers and others concerned.

WILLIAM VON RAAB,
Commissioner of Customs.

Investigation No. 701–TA–79

Notice of Suspension of Countervailing Duty Investigation Concerning Sodium Gluconate From the European Economic Community

AGENCY: United States International Trade Commission.

ACTION: Suspension of countervailing duty investigation on sodium gluconate from the European Economic Community (EEC).

SUMMARY: On November 24, 1981, the United States Department of Commerce notified the Commission that pursuant to section 704(f)(1)(A) of the Tariff Act of 1930 (19 U.S.C. 1671c) it had suspended the countervailing duty investigation involving sodium gluconate from the European Economic Community. The basis for the suspension is an agreement between the Department of Commerce and Joh A. Benckiser (Benckiser), a manufacturer and exporter of sodium gluconate in the Federal Republic of Germany that accounts for substantially all of the imported merchandise. This agreement completely offsets the subsidy. As a result of this action by the Department of Commerce, the Commission is required by section 704(f)(1)(B) and (C) of the Tariff Act of 1930 to suspend its investigation effective on the date of publication of this notice in the Federal Register.

FOR FURTHER INFORMATION CONTACT: Woodley Timberlake, Office of Investigations, telephone 202–523–4618.

SUPPLEMENTARY INFORMATION: On June 16, 1981, a petition was filed simultaneously with the Department of Commerce (the administering authority) and the U.S. International Trade Commission by Pfizer, Inc., alleging that sodium gluconate imported from the EEC benefits from the payment or bestowal of bounties or grants within the meaning of the countervailing duty laws of the United States. On July 31, 1981, the Commission notified Commerce of its preliminary determination that there is a reasonable indication that an industry in the United States is materially injured, or threatened with material injury, by reason of the importation of the merchandise in question. On September 9, 1981, Commerce preliminarily determined that the EEC is subsidizing the manufacture, production, and exportation of sodium gluconate within the meaning of the countervailing duty laws. Commerce directed the U.S. Customs Service to suspend liquidation of entries of the merchandise entered, or withdrawn from warehouse, and to require a cash deposit, bond, or other security in the amount of $107.05 per metric ton (the estimated amount of the net subsidy) to be posted on this merchandise.

On October 30, 1981, Commerce published in the Federal Register a notice of proposal to suspend the investigation on the basis of an agreement proposed on behalf of Benckiser. The basis of the proposed suspension agreement was contained in a letter to Commerce dated August 14, 1981, in which Benckiser agreed to renounce all export restitution payments on sales of sodium gluconate to the United States effective August 18, 1981.

By order of the Commission.

Issued: November 30, 1981.

KENNETH R. MASON,
Secretary.

Investigation No. 104-TAA-5

Notice of Termination of Countervailing Duty Investigation Concerning Ski Lifts and Parts Thereof from Italy

AGENCY: United States International Trade Commission.

ACTION: Termination of countervailing duty investigation under section 104(b)(1) of the Trade Agreements Act of 1979, with regard to ski lifts and parts thereof from Italy.

EFFECTIVE DATE: November 30, 1981.

FOR FURTHER INFORMATION CONTACT: Mr. Stephen Miller, Office of Investigations, telephone number (202) 523-0305.

SUPPLEMENTARY INFORMATION: The Trade Agreements Act of 1979, subsection 104(b)(1), requires the Commission in the case of a countervailing duty order issued under section 303 of the Tariff Act of 1930, upon the request of a government or group of exporters of merchandise covered by the order, to conduct an investigation to determine whether an industry in the United States would be materially injured, or threatened with material injury, or whether the establishment of such an industry would be materially retarded, if the order were to be revoked. On March 28, 1980, the Commission received a request from the Delegation of the Commission of the European Communities for the review of the outstanding countervailing duty order on ski lifts and parts thereof from Italy (T.D. 68–288).

The Commission instituted an investigation on ski lifts and parts thereof from Italy on August 10, 1981 (46 F.R. 42220). A prehearing conference was held on October 1, 1981, however, no persons other than Commission staff attended or otherwise participated. On October 7, 1981, the Commission was notified by letter that Hall Ski–Lift Co., the original and only petitioner for the countervailing duty order, wished to withdraw its petition on ski lifts because of minimal imports from Italy in recent years.

There is no provision in the Trade Agreements Act of 1979, or in its legislative history, specifically permitting termination of a section 104(b) investigation. However, authority to terminate such investigations is implied under section 704(a) of the Tariff Act of 1930. Section 704(a) permits termination of countervailing duty investigations properly instituted under Title VII of the Tariff Act of 1930. Section 704(a) directs the Commission to solicit public comment prior to termination and approve termination only if it is in the public interest.

On October 19, 1981, the Commission published a notice in the Federal Register (46 F.R. 51326) requesting public comment by November 18, 1981 on the proposed termination of the Commission investigation on ski lifts and parts thereof from Italy. No adverse comments were received in response to the Commission's notice. Thus, the Commission deems it to be in the public interest to terminate this investigation in light of the withdrawal of the petition by the original petitioner and by lack of interest in the continuance of the investigation by any interested parties.

The Commission is therefore terminating its investigation (Inv. No. 104–TAA–5) under section 104(b)(1) of the Trade Agreements Act of 1979 on ski lifts and parts thereof from Italy (T.D. 68–288). The termination of this investigation has the same effect as a determination that an industry in the United States would not be materially injured or threatened with material injury, nor would the establishment of

such an industry be materially retarded, if the countervailing duty order were to be revoked.

In addition to publishing this Federal Register notice, the Commission is serving a copy of this notice on all persons who have written the agency in connection with this investigation and is also notifying the Department of Commerce of its action in this case.

By order of the Commission.

Issued: November 30, 1981.

KENNETH R. MASON,
Secretary.

(19 CFR 207.40)

Notice of Request for Public Comment on Termination of Countervailing Duty Investigation Concerning Compressors and Parts Thereof from Italy

AGENCY: U.S. International Trade Commission.

ACTION: Request for comments on proposed termination of countervailing duty investigation under section 104(b) of the Trade Agreements Act of 1979.

FOR FURTHER INFORMATION CONTACT: Mr. Larry Reavis, Office of Investigations, telephone 202–523–0296.

SUPPLEMENTARY INFORMATION: The Trade Agreements Act of 1979, subsection 104(b)(1), requires the Commission in the case of a countervailing duty order issued under section 303 of the Tariff Act of 1930, upon the request of a government or group of exporters of merchandise covered by the order, to conduct an investigation to determine whether an industry in the United States would be materially injured, or threatened with material injury, or whether the establishment of such industry would be materially retarded, if the order were to be revoked. On March 28, 1980, the Commission received a request from the Delegation of the Commission of the European Communities for the review of the countervailing duty order on compressors and parts thereof from Italy (T.D. 72–122), notice of which was published on May 3, 1972, in the Federal Register (37 F.R. 8948).

The Commission received a letter on November 16, 1981, from Tecumseh Products Company, the original petitioner for the countervailing duty order, stating that it withdraws its request for the imposition of countervailing duties under the above-referenced countervailing duty order.

best copy available

The legislative history of section 704(a) of the Tariff Act of 1930, as amended by the Trade Agreements Act, indicates that the Commission should solicit public comment prior to termination of an investigation and approve the termination only it if is in the public interest. In light of the Commission's duty to consider the public interest, the Commission requests written comments from persons concerning the proposed termination of the investigation on compressors and parts thereof from Italy. These written comments must be filed with the Secretary to the Commission no later than 30 days after publication of this notice in the Federal Register.

By order of the Commission.

Issued: November 27, 1981.

KENNETH R. MASON,
Secretary.

Investigation No. 751–TA–5

SALMON GILL FISH NETTING OF MANMADE FIBERS FROM JAPAN

Notice of Postponement of Public Hearing

AGENCY: United States International Trade Commission.

ACTION: Postponement of public hearing in connection with investigation No. 751–TA–5.

SUMMARY: Notice is hereby given that the United States International Trade Commission has postponed its December 17, 1981 public hearing in the subject investigation. A new hearing date and location will be announced.

FOR FURTHER INFORMATION CONTACT: Daniel Leahy, Office of Investigations, U.S. International Trade Commission, (202) 523–1369.

By Order of the Commission.

Issued: November 25, 1981.

KENNETH R. MASON,
Secretary.

Index

U.S. Customs Service

Treasury decisions:	T.D. No.
Carriers bond	81-299
Drawback contract for component parts	81-300
Foreign currencies:	
Daily rates; November 2-6, 1981	81-302
Variances; November 2-6, 1981	81-303
Synopses of drawback decisions	81-301

Court of Customs and Patent Appeal

	Appeal No
National Sugar Refining Co. v. U.S.	80-31

U.S. GOVERNMENT PRINTING OFFICE : 1981 O - 357-932

DEPARTMENT OF THE TREASURY
U.S. CUSTOMS SERVICE
WASHINGTON, D.C. 20229

OFFICIAL BUSINESS
PENALTY FOR PRIVATE USE, $300

POSTAGE AND FEES PAID
DEPARTMENT OF THE TREASURY (CUSTOMS)
(TREAS. 552)

15/52

Customs Bulletin

Regulations, Rulings, Decisions, and Notices concerning Customs and related matters

and Decisions

of the United States Court of Customs and Patent Appeals and the United States Court of International Trade

Vol. 15 DECEMBER 30, 1981 No. 52

NEWARK PUBLIC LIBRARY

JAN 25 1982

U. S. GOVT. PUBS.
DEPOSITORY 376

This issue contains

T.D. 81-304 Through T.D. 81-311
Proposed Rulemaking
General Notice
Recent Unpublished Customs Service Decisions
Slip Op. 81-111 Through 81-113
Reap. Abstracts R81/451 Through R81/463
International Trade Commission Notices

THE DEPARTMENT OF THE TREASURY
U.S. Customs Service

T 1. 11/3:

NOTICE

The abstracts, rulings, and notices which are issued weekly by the U.S. Customs Service are subject to correction for typographical or other printing errors. Users may notify the U.S. Customs Service, Logistics Management Division, Washington, D.C. 20229, of any such errors in order that corrections may be made before the bound volumes are published.

For sale by the Superintendent of Documents, U.S. Government Printing Office, Washington, D.C. 20402. Price: $2.50 (single copy domestic); $3.15 (single copy foreign). Subscription price: $95.00 a year domestic; $118.75 a year foreign.

U.S. Customs Service
Treasury Decisions

(T.D. 81-304)

General Notice

Vessels in Foreign and Domestic Trades; Fee Schedule for Vessel Services

AGENCY: U.S. Customs Service, Department of the Treasury.

ACTION: General notice.

SUMMARY: The "Customs Procedural Reform and Simplification Act of 1978" repealed several statutes under which Customs charged and collected fees for specific services provided to vessels by Customs officers. That Act authorized the Secretary of the Treasury to establish a new schedule of fees to return to the Government the approximate costs of the service provided. This document sets forth the revised schedule of fees to be charged and collected for 1982 for the specified services.

EFFECTIVE DATE: January 1, 1982.

FOR FURTHER INFORMATION CONTACT: Jerry Laderberg, Carriers, Drawback and Bonds Division, U.S. Customs Service, 1301 Constitution Avenue, NW., Washington, D.C. 20229 (202-566-5706).

SUPPLEMENTARY INFORMATION:

Background

Pub. L. 95-410, the "Customs Procedural Reform and Simplification Act of 1978," approved October 3, 1978 (the "Act"), repealed sections 2654, 4381, 4382, and 4383 of the Revised Statutes of the United States (19 U.S.C. 58; 46 U.S.C. 329, 330, and 333), the statutory authority under which Customs had been charging and collecting fees for specific services provided to vessels by Customs officers.

Because these "Navigation Fees," which are set forth in section 4.98(a), Customs Regulations (19 CFR 4,98(a)), did not cover the costs of providing the services, section 214 of the Act authorized the Secretary of the Treasury to establish a new schedule of fees to be charged and collected for furnishing these services. The fees are to be

consistent with section 501 of the Independent Offices Appropriation Act, 1952 (31 U.S.C. 483a), the so-called "User Charges Statute," which provides that the costs of specific services for private interests shall be reimbursed to the Government.

By Treasury Decision 80–25, published in the Federal Register on January 18, 1980 (45 FR 3570), Customs established a fee schedule to be used for 1980, and amended section 4.98(a), Customs Regulations, to provide that a revised fee schedule will be published in the Federal Register and CUSTOMS BULLETIN in December of each year setting forth a revised schedule of navigation fees for the specified vessel services to be performed during the following year. The revised fee schedule is to reflect changes in the rate of compensation paid to the Customs Officer performing the service. The fees are to be calculated in accordance with sections 19.5(b) and 24.17(d), Customs Regulations (19 CFR 19.5(b), 24.17(d)), and based upon the amount of time the average service requires of a Customs officer in the fifth step of GS–9.

Because of the Federal pay increase which became effective October 4, 1981, it is necessary for Customs to revise the schedule of fees for 1982 to take into account this increased cost in accordance with section 4.98(a), Customs Regulations. The hourly rate utilized is $14.53, thereby reflecting the change in the rate of compensation paid to a Customs officer in the fifth step of GS–9 performing the service. The fees have been rounded off to the nearest tenth of a dollar.

ACTION

The following revised schedule of navigation fees shall be effective during 1982:

Fee No.	Description of services	Fee
1	Entry of vessel, including American, from foreign port:	
	(a) Less than 100 net tons	$7.30
	(b) 100 net tons and over	14.50
2	Clearance of vessel, including American, to foreign port:	
	(a) Less than 100 net tons	7.30
	(b) 100 net tons and over	14.50
3	Issuing permit to foreign vessel to proceed from district to district, and receiving manifest	14.50
4	Receiving manifest of foreign vessel on arrival from another district, and granting a permit to unlade	14.50
5	Receiving post entry	7.30
6	Receiving official bond not otherwise provided for	3.60
7	Certifying payment of tonnage tax for foreign vessel only	3.60
8	Furnishing copy of official document, including certified outward foreign manifest, and others not elsewhere enumerated	14.50

AUTHORITY

R.S. 251, as amended, section 501, 65 Stat. 290, 92 Stat. 888 (19 U.S.C. 66, 31 U S.C. 483a, Pub. L. 95–410).

DRAFTING INFORMATION

The principal author of this document was Charles D. Ressin, Regulations Control Branch, Office of Regulations and Rulings, U.S. Customs Service. However, personnel from other Customs offices participated in its development.

GEORGE C. CORCORAN, JR.,
Acting Commissioner of Customs.

Approved: December 7, 1981.
JOHN M. WALKER, JR.,
Assistant Secretary of the Treasury.

[Published in the Federal Register December 15, 1981 (46 FR 61194)]

(T.D. 81–305)

Bonds

Approval and discontinuance of Carrier's Bonds, Customs Form 3587

Bonds of carriers for the transportation of bonded merchandise have been approved or discontinued as shown below. The symbol "D" indicates that the bond previously outstanding has been discontinued on the month, day, and year represented by the figures which follow. "PB" refers to a previous bond, dated as represented by figures in parentheses immediately following, which has been discontinued. If the previous bond was in the name of a different company or if the surety was different, the information is shown in a footnote at the end of the list.

Dated: December 10, 1981.

Name of principal and surety	Date of bond	Date of approval	Filed with district director/area director/amount
A.T.L., Inc., 1860–74 Peachtree Rd., N.W., Atlanta, GA; motor carrier; United Pacific Ins. Co.	Aug. 1, 1981	Nov. 6, 1981	Savannah, GA $50,000
Agra Overseas Corp., 5400 N.W. 32nd Court, Miami, FL; motor carrier; St. Paul Fire & Marine Ins. Co. D 11/13/81	June 8, 1978	Dec. 26, 1978	Miami, FL $50,000
All Freight Distribution Co., Inc., 6201 Seaforth St., Baltimore, MD; motor carrier; The American Ins. Co.	Nov. 4, 1981	Nov. 10, 1981	Baltimore, MD $25,000

See footnotes at end of table.

Name of principal and surety	Date of bond	Date of approval	Filed with district director/area director/amount
Canadian National Railway Co., Montreal, Quebec, Canada; Duluth, Winnipeg and Pacific Railway Co., Duluth, MN; Grand Trunk Western Railroad Co., Detroit, MI; Central Vermont Railway, Inc., St. Albans, VT; rail carrier; Federal Ins. Co. (PB 10/23/51) D 11/10/81 [1]	Sept. 22, 1981	Nov. 10, 1981	St. Albans, VT $100,000
Casco Services Inc., 91 Bay Ave., Newark, NJ; motor carrier; American Manufacturers Mutual Ins. Co.	Nov. 6, 1981	Nov. 13, 1981	Newark, NJ $50,000
Caudell Transport, Inc., Bldg. 33, State Farmers Market, c/o P.O. Drawer I, Forest Park, GA; motor carrier; Safeco Ins. Co. of America	Aug. 26, 1981	Sept. 1, 1981	Savannah, GA $25,000
Central of Georgia Railway Co.—See Southern Railway Co.			
Central Vermont Railway, Inc.—See Canadian National Railway Co.			
Cocke Brothers Transportation Systems, Inc., 4919 Old Louisville Rd., Savannah, GA; motor carrier; Reliance Ins. Co.	May 21, 1981	June 4, 1981	Savannah, GA $25,000
Davidson Transfer & Storage Co., 6301 Pulaski Highway, Baltimore, MD; motor carrier; Fidelity & Deposit Co. of MD D 11/16/81	May 1, 1968	May 1, 1968	Baltimore, MD $25,000
Dresser Transportation Services, Inc., 400 W. Wilson Bridge Rd., Worthington, OH; motor carrier; Firemens Ins. Co. of Newark, NJ	Nov. 2, 1981	Nov. 10, 1981	Cleveland, OH $100,000
Duluth, Winnipeg and Pacific Railway Co.—See Canadian National Railway Co.			
Falcon Transport Inc., P.O. Box K, Bird-In-Hand, PA; motor carrier; Aetna Casualty & Surety Co. (PB 11/1/80) D 11/10/81 [2]	Oct. 15, 1981	Nov. 10, 1981	Buffalo, NY $25,000
Gateway Transfer Co., 1319 Santa Rita, Laredo, TX; motor carrier; St. Paul Fire & Marine Ins. Co. (PB 12/1/80) D 11/18/81 [3]	Oct. 28, 1981	Nov. 18, 1981	Laredo, TX $60,000
Grand Trunk Western Railroad Co.—See Canadian National Railway Co.			
Jacob's Transfer, Inc., 2300 Beaver Rd., Landover, MD; motor carrier; Liberty Mutual Ins. Co. D 11/6/81	Apr. 28, 1975	Sept. 16, 1975	Washington, D.C. $25,000
Kars Transport, Inc., 3333 N.W. 116th St., Miami, FL; motor carrier; Aetna Ins. Co. (PB 3/9/79) D 10/4/81	Oct. 5, 1981	Oct. 5, 1981	Miami, FL $25,000

See footnotes at end of table.

Name of principal and surety	Date of bond	Date of approval	Filed with district director/area director/amount
New Orleans Terminal Co.—See Southern Railway Co.			
Leland C. Creel, dba: Port City Drayage Co., 115 Bluewood Dr., Biloxi, MS; motor carrier; St. Paul Fire & Marine Ins. Co.	Nov. 6, 1981	Nov. 13, 1981	Mobile, AL $25,000
William Nicholson, dba: Press Express, P.O. Box 188, Dolton, IL; contract carrier; Peerless Ins. Co.	Sept. 16, 1981	Oct. 28, 1981	Chicago, IL $50,000
Provost Cartage Inc., 7887 Grenache, Ville D'Anjou, P.Q., Canada; motor carrier; St. Paul Fire & Marine Ins. Co.	Aug. 25, 1981	Oct. 8, 1981	Ogdensburg, NY $50,000
Quick Transport, Inc., 5320 Augusta Rd., P.O. Box 4216, Port Wentworth, GA; motor carrier; Reliance Ins. Co.	May 1, 1981	May 11, 1981	Savannah, GA $25,000
Rebel Express Co., 10 Greenfield Rd., Lancaster, PA; motor carrier; Peerless Ins. Co.	June 18, 1981	July 24, 1981	Savannah, GA $25,000
St. Johns River Terminal Co., hereafter known as Southern Railway System—See Southern Railway Co.			
Savannah & Atlanta Railway Co.—See Southern Railway Co.			
Seaport Transportation Corp., 312 W. End, Detroit, MI; motor carrier; St. Paul Fire & Marine Ins. Co. D 11/13/81	Nov. 13, 1980	Nov. 13, 1980	Detroit, MI $50,000
Short Freight Lines, Inc., 459 S. River Rd., Bay City, MI; motor carrier; Washington International Ins. Co.	Oct. 27, 1981	Nov. 12, 1981	Detroit, MI $50,000
Southern Railway Co., a corp. of the State of VA; New Orleans Terminal Co., a corp. of the State of LA; Central of Georgia Railroad Co., a corp. of the State of GA and St. Johns River Terminal Co., a corp. of the State of FL hereafter known as Southern Railway System, P.O. Box 1808, Washington, D.C.; rail carrier; Federal Ins. Co. (PB 2/10/71) D 11/13/81[4]	Nov. 6, 1981	Nov. 13, 1981	Baltimore, MD $100,000
Stateline Systems Inc., 3086 Sidco Dr., P.O. Box 101020, Nashville, TN; truck carrier; Old Republic Ins. Co.	Oct. 15, 1981	Nov. 13, 1981	New Orleans, LA $25,000
Texas Shippers Association Inc., 2311 Butler St., Dallas, TX; freight forwarder; St. Paul Fire & Marine Ins. Co.	Sept. 3, 1981	Oct. 2, 1981	Dallas/Fort Worth, TX $50,000

See footnotes at end of table.

Name of principal and surety	Date of bond	Date of approval	Filed with district director/area director/amount
Thurston Motor Lines, Inc., 600 Johnston Rd., Charlotte, SC; motor carrier; Ins. Co. of North America (PB 5/15/68) D 11/9/81[1]	Oct. 1, 1981	Nov. 9, 1981	Charleston, SC $25,000
Frank Felix Zochowski, 15340 E. 32 Mile Rd., Romeo, MI; air carrier; Old Republic Ins. Co.	Nov. 11, 1981	Nov. 12, 1981	Detroit, MI $50,000

[1] Principal is Canadian National Railway Co., Canadian National Steamship Co., Ltd., Duluth, Winnipeg & Pacific Railway Co., The Canadian Northern Railway Co. (lessee of The Minnesota & Manitoba Railroad Co.), Grand Truck Western Railroad Co., Central Vermont Railway, Inc.
[2] Surety is The Buckeye Union Ins. Co.
[3] Principal is Gateway Transfer Co., Inc.; Surety is United States Fire Ins. Co.
[4] Principal is Southern Railway Co., New Orleans Terminal Co., Central of Georgia Railway Co., Savannah & Atlanta Railway Co., St. Johns River Terminal Co., known as Southern Railway System.
[5] Principal is the Aetna Casualty & Surety Co.

(BON-3-03)

GEORGE C. STEUART
(For Marilyn G. Morrison, Director,
Carriers, Drawback and Bonds Division).

(T.D. 81-306)

Foreign Currencies—Daily Rates for Countries Not on Quarterly List

The Federal Reserve Bank of New York, pursuant to section 522(c), Tariff Act of 1930, as amended (31 U.S.C. 372(c)), has certified buying rates for the dates and foreign currencies shown below. The rates of exchange, based on these buying rates, are published for the information and use of Customs officers and others concerned pursuant to part 159, subpart C, Customs Regulations (19 CFR 159, subpart C).

(11/11/81, Holiday, Countries take 11/10/81 rate)

Argentina peso:	
November 9–12, 1981	$0.000159
November 13, 1981	.000156
Chile peso:	
November 9–13, 1981	$0.017452
Colombia peso:	
November 9–13, 1981	$0.017452
Greece drachma:	
November 9, 1981	$0.017986
November 10, 1981	.017841
November 12–13, 1981	.017857

Indonesia rupiah:
November 9–13, 1981 ..... $0.001582
Israel shekel:
November 9, 1981 ..... $0.070472
November 10–12, 1981 ..... .069881
November 13, 1981 ..... .069396
Peru sol:
November 9–13, 1981 ..... $0.002119
South Korean won:
November 9–13, 1981 ..... $0.001453

(LIQ-01-03 O:C:E)

Dated: December 7, 1981.

KENNETH A. RICH,
Acting Chief,
Customs Information Exchange.

(T.D. 81-307)

Foreign Currencies—Variances From Quarterly Rate

The following rates of exchange are based upon rates certified to the Secretary of the Treasury by the Federal Reserve Bank of New York, pursuant to section 522(c), Tariff Act of 1930, as amended (31 U.S.C. 372(c)), and reflect variances of 5 per centum or more from the quarterly rate published in Treasury Decision 81-269 for the following countries. Therefore, as to entries covering merchandise exported on the dates listed, whenever it is necessary for Customs purposes to convert such currency into currency of the United States, conversion shall be at the following rates.

(11/11/81, Holiday, Countries take 11/10/81 rate)

Austria schilling:
November 9, 1981 ..... $0.064809
November 10, 1981 ..... .064267
November 12, 1981 ..... .064350
November 13, 1981 ..... .064392
Brazil cruziero:
November 9–13, 1981 ..... $0.008554
Germany deutsche mark:
November 9, 1981 ..... $0.453412
November 12, 1981 ..... .452182

Hong Kong dollar:	
November 9, 1981	$0.177936
November 10, 1981	.176678
November 12, 1981	.176585
November 13, 1981	.177069
Netherlands guilder:	
November 9, 1981	$0.411862
November 10, 1981	.408664
November 12, 1981	.412371
November 13, 1981	.411862
Switzerland franc:	
November 9, 1981	$0.564972
November 10, 1981	.557880
November 12, 1981	.568505
November 13, 1981	.569152

(LIQ-03-01 O:C:E)

Dated: December 7, 1981.

KENNETH A. RICH,
Acting Chief,
Customs Information Exchange.

(T.D. 81-308)

Foreign Currencies—Daily Rates for Countries Not on Quarterly List

The Federal Reserve Bank of New York, pursuant to section 522(c), Tariff Act of 1930, as amended (31 U.S.C. 372(c)), has certified buying rates for the dates and foreign currencies shown below. The rates of exchange, based on these buying rates, are published for the information and use of Customs officers and others concerned pursuant to part 159, subpart C, Customs Regulations (19 CFR 159, subpart C).

Argentina peso:	
November 16–17, 1981	$0.000156
November 18, 1981	.000155
November 19, 1981	.000156
November 20, 1981	.000152
Chile peso:	
November 16–20, 1981	$0.025575
Colombia peso:	
November 16–20, 1981	$0.017452

Greece drachma:

November 16, 1981	$0.017699
November 17, 1981	.017606
November 18, 1981	.017590
November 19, 1981	.017730
November 20, 1981	.017637

Indonesia rupiah:

November 16–20, 1981	$0.001582

Israel shekel:

November 16–17, 1981	$0.069252
November 18–19, 1981	.068493
November 20, 1981	.068027

Peru sol:

November 16–20, 1981	$0.002119

South Korea won:

November 16–17, 1981	$0.001453
November 18, 1981	.001452
November 19–20, 1981	.001453

(LIQ–01–03 O:C:E)

Dated: December 8, 1981.

KENNETH A. RICH,
Acting Chief,
Customs Information Exchange.

(T.D. 81–309)

Foreign Currencies—Variances From Quarterly Rate

The following rates of exchange are based upon rates certified to the Secretary of the Treasury by the Federal Reserve Bank of New York, pursuant to section 552(c), Tariff Act of 1930, as amended (31 U.S.C. 372(c)), and reflect variances of 5 per centum or more from the quarterly rate published in Treasury Decision 81–269 for the following countries. Therefore, as to entries covering merchandise exported on the dates listed, whenever it is necessary for Customs purposes to convert such currency into currency of the United States, conversion shall be at the following rates.

Brazil cruziero:

November 16, 1981	$0.008554
November 17–20, 1981	.008406

Hong Kong dollar:	
November 16, 1981	$0.177085
November 17, 1981	.176211
November 18, 1981	.175978
November 19, 1981	.176600
November 20, 1981	.176741
Japan yen:	
November 19, 1981	$0.004539
November 20, 1981	.004574
Netherlands guilder:	
November 16, 1981	$0.408497
November 17, 1981	.406835
November 18, 1981	.408496
November 19, 1981	.407332
Switzerland franc:	
November 16, 1981	$0.566251
November 17, 1981	.555093
November 18, 1981	.558971
November 19, 1981	.556483
November 20, 1981	.550055

(LIQ-03-01 O:C:E)

Dated: December 8, 1981.

KENNETH A. RICH,
Acting Chief,
Customs Information Exchange.

(T.D. 81-310)

Foreign Currencies—Daily Rates for Countries Not on Quarterly List

The Federal Reserve Bank of New York, pursuant to section 522(c)' Tariff Act of 1930, as amended (31 U.S.C. 372(c)), has certified buying rates for the dates and foreign currencies shown below. The rates of exchange, based on these buying rates, are published for the information and use of Customs officers and others concerned pursuant to part 159, subpart C, Customs Regulations (19 CFR 159, subpart C).

(11/26/81, Holiday, Countries take 11/25/81 rate)

Argentina peso:	
November 23-26, 1981	$0.000152
November 27, 1981	.000149
Chile peso:	
November 23-27, 1981	$0.025575

Colombia peso:
November 23–27, 1981 ..... $0.017452
Greece drachma:
November 23, 1981 ..... $0.017452
November 24, 1981 ..... .017637
November 25–27, 1981 ..... .017762
Indonesia rupiah:
November 23–27, 1981 ..... $0.001582
Israel shekel:
November 23, 1981 ..... $0.068027
November 24, 1981 ..... .056667
November 25–27, 1981 ..... .066225
Peru sol:
November 23–27, 1981 ..... $0.002119
South Korea won:
November 23–24, 1981 ..... $0.001453
November 25–26, 1981 ..... .001452
November 27, 1981 ..... .001449

(LIQ–01–03 O:C:E)

Dated: December 10, 1981.

KENNETH A. RICH,
Acting Chief,
Customs Information Exchange

(T.D. 81–311)

Foreign Currencies—Variances From Quarterly Rate

The following rates of exchange are based upon rates certified to the Secretary of se Treasury by the Federal Reserve Bank of New York, pursuant to section 522(c), Tariff Act of 1930, as amended (31 U.S.C. 372(c)), and reflect variances of 5 per centum or more from the quarterly rate published in Treasury Decision 81–269 for the following countries. Therefore, as to entries covering merchandise exported on the dates listed, whenever it is necessary for Customs purposes to convert such currency into currency of the United States, conversion shall be at the following rates.

(11/26/81, Holiday, Countries take 11/25/81 rate)

Brazil cruziero:
November 23–26, 1981 ..... $0.008406
November 27, 1981 ..... .008255

Hong Kong dollar:	
November 23, 1981	$0.176897
November 24, 1981	.177085
November 25–26, 1981	.177226
November 27, 1981	.176991
Japan yen:	
November 23, 1981	$0.004596
November 24, 1981	.004632
November 25–26, 1981	.004617
November 27, 1981	.004637
Netherlands guilder:	
November 24, 1981	$0.408998
November 25–26, 1981	.414766
November 27, 1981	.412371
Switzerland franc:	
November 23, 1981	$0.553710
November 24, 1981	.560067
November 25–26, 1981	.561798
November 27, 1981	.562588
United Kingdom pound:	
November 25–26, 1981	$1.9280
November 27, 1981	1.9560

(L IQ–03–01 O:C:E)

Dated: December 10, 1981.

KENNETH A. RICH,
Acting Chief,
Customs Information Exchange.

U.S. Customs Service

Proposed Rulemaking

19 CFR 12.85

General Provisions

Safety Standards for Boats and Associated Equipment

AGENCY: U.S. Customs Service, Department of the Treasury.

ACTION: Proposed rule.

SUMMARY: By this notice, the Customs Service and the Coast Guard propose to amend their joint regulations relating to safety standards for foreign-made boats and associated equipment. These changes, which are designed to clarify certain filing requirements, eliminate bond requirements in some instances, and implement a more reasonable time limit for the completion of repairs or alterations, are proposed to correct problems encountered under the existing regulations.

DATES: Written comments must be received on or before (60 days from the date of publication in the Federal Register).

ADDRESS: Comments (preferably in triplicate) should be addressed to the Commissioner of Customs, Attention: Regulations and Research Division, U.S. Customs Service, 1301 Constitution Avenue NW., Room 2426, Washington, D.C. 20229.

FOR FURTHER INFORMATION CONTACT: Ens. Paul Newman, Office of Boating, Public, and Consumer Affairs (G–BBT–3/42), Room 4213, U.S. Coast Guard Headquarters Building, 2100 Second Street SW., Washington, D.C. 20593 (202–426–1065) or H. C. Feese, Duty Assessment Division, Room 4118, U.S. Customs Service, 1301 Constitution Avenue NW., Washington, D.C. 20229 (202–566–8651).

SUPPLEMENTARY INFORMATION:

Background

Section 11 of the Federal Boat Safety Act of 1971 (46 U.S.C. 1460) provides that the Secretaries of Transportation and the Treasury

may, by joint regulations, authorize the importation of boats or associated equipment which do not conform with applicable Federal safety regulations and standards upon terms and conditions which will assure that the boats or associated equipment will be brought into conformity before being used on waters subject to the jurisdiction of the United States.

Under this authority, Customs and the Coast Guard published T.D. 76–166 in the Federal Register on June 10, 1976 (41 FR 23398), setting forth a new section 12.85, Customs Regulations (19 CFR 12.85), relating to safety standards for boats and associated equipment.

Section 12.85 provides that boats and associated equipment will be denied entry into the customs territory of the United States unless accompanied by evidence of compliance with the standards or regulations. Evidence of compliance may consist of either a compliance certification label affixed to the product or a hull identification number affixed by the importer or the original manufacturer.

Certain products may be permitted entry and release without a compliance certification label or hull identification number if they fall within one of the following categories and if the conditions for entry and release specified in section 12.85 for each category of product are met.

1. Products manufactured before an applicable standard or regulation was in effect.

2. Products exempted from standards or regulations by a Coast Guard Grant of Exemption.

3. Products not in conformity at the time of entry but which will be brought into conformity.

4. Products belonging to nonresidents which are not in conformity and are entering the United States for repair or alteration.

5. Products owned by certain foreign government or international organization personnel.

6. Products entered for tests or experimentation.

Following the issuance of section 12.85, the Coast Guard began an Imported Boats Compliance Program. Project managers for the Coast Guard and Customs reevaluated the program and found it to be deficient in several areas. Accordingly, after numerous meetings between Customs and the Coast Guard, it has been determined advisable to modify the program and revise the regulations. A discussion of modifications and proposed regulations amendments follows:

i. Section 12.85(c)(1) provides that certain products manufactured before the standards or regulations became effective, may be entered into the United States if a declaration is filed in accordance with section 12.85(d). The declaration, signed by the importer or consignee,

must state that the product was manufactured before the applicable standard or regulation was in effect and must include the name and U.S. address of the importer or consignee, the entry number and date, the make, model, and hull identification number (if affixed), date of manufacture (if hull identification number not affixed), a description of any equipment or component; and the city or State in which the product will be principally located (if known).

For products entering from Canada or Mexico otherwise than by sea, a small percentage of the total, a verbal declaration is acceptable at the option of the district director.

The Coast Guard has determined that because: (1) district directors rarely exercise the option to accept these verbal declarations; and, (2) written declarations from all importers would allow the Coast Guard and Customs to assess the import activity of noncomplying products more accurately and enable the Coast Guard to keep importers informed of current regulations and subsequent changes are made, it has been determined that section 12.85(c) (1) and (4) should be amended to delete the provision for a verbal declaration.

2. Section 12.85(c)(4) provides that noncomplying products temporarily entered by nonresidents for repairs or alterations may remain in the country for only 60 days from the date of entry. However, in many instances, 60 days does not provide adequate time for making extensive repairs and alterations. Consequently, it is proposed to amend section 12.85(c)(4) to extend the limit to 1 year.

3. At present, section 12.85(e) states that importers of noncomplying boats entering the United States must give a bond and may not use or sell the boats until they are brought into conformance. As a result, noncomplying racing boats may not compete in domestic races. Also, a bond must be given for noncomplying boats imported for use in exhibits. In order to facilitate the importation of nonconforming boats for use in races, exhibits, tests, and experiments, it is proposed to amend section 12.85(c)(6) and the heading thereto, to allow boats to be imported for these purposes without bond, provided a declaration is filed in accordance with section 12.85(d).

4. Currently, certain products which are not in compliance with section 12.85 are permitted entry and release without a compliance certification label or hull identification number affixed, as is required by Coast Guard regulations contained in 33 CFR Part 181, Subparts B and C, if they are accompanied by a declaration filed in accordance with section 12.85(d). Although the Customs Regulations do not specify which form this declaration is to be filed upon, Coast Guard Form CG 5096 now is being accepted by both the Coast Guard and Customs as the appropriate document for this purpose. It is proposed

357-933 O - 82 - 3

to amend section 12.85(d) to specify that the required declaration must be filed on this form.

5. In accordance with section 12.85(e) (1) and (2), products that do not conform to the provisions of section 12.85 at the time of entry, but which will later be brought into compliance, may be brought into the United States after giving a 90-day bond, which may be extended for any additional period by the district director of Customs for good cause shown. If not brought into compliance within the allotted time, the products must be redelivered to the district director for disposition in accordance with the Customs laws and regulations. However, because extensive modification is frequently required, 90 days is often not sufficient to bring a product into compliance. In order to provide a more reasonable time to bring these products into compliance and to eliminate the additional paperwork generated by requests for extensions, it is proposed to amend section 12.85(e)(2) to provide 180 days, with no extension, to bring nonconforming products into compliance. Based upon past experience, although 90 days was too short a timespan and extensions had to be granted, the need to extend beyond 180 days was not evidenced. Giving an automatic 180-day period relieves both the public and the Federal Government of the burden of processing requests for extensions of 90 days.

Proposed Amendments

It is proposed to amend section 12.85, Customs Regulations (19 CFR 12.85), in the following manner:

12.85 Coast Guard boat and associated equipment safety standards.

1. Section 12.85(c)(1) would be amended by deleting the last sentence.

2. Section 12.85(c)(4) would be amended by substituting the phrase "one year" for the phrase "60 days" wherever it appears.

3. Section 12.85(c)(4) would be further amended by deleting the last sentence.

4. Section 12.85(c)(6) would be amended to read as follows:

* * * * * * *

(6) *Certain products entered for tests, experiments, exhibits, or races.* An importer or consignee seeking to enter a product for a period not to exceed 1 year, for tests, experiments, exhibits, or races, but not for sale in the United States, shall file a declaration in accordance with paragraph (d) of this section. The declaration shall state that the importer or consignee is importing the product solely for the stated purpose and that it will not be sold or operated in the United States, unless the opera-

tion is an integral part of the stated use for which the product was imported. The importer or consignee shall attach to the declaration a description of the use for which the product is being imported, the time period estimated for completion, and the disposition to be made of the product after completion. Entry under this paragraph may be authorized for a period not to exceed 1 year.

5. Section 12.85(d) would be amended to read as follows:

(d) *Declaration requirements.* All declarations submitted must:

(1) Be filed at the time of entry, in duplicate on Form CG-5096.

(2) Be signed by the importer or consignee.

(3) State the name and U.S. address of the importer or consignee.

(4) State the entry number and date.

(5) Provide the make, model, and hull identification number, if affixed, or date of manufacture if hull identification number not affixed, of any boat, and a description of any equipment or component.

(6) Identify, if known, the city or state in which the product will be principally located.

(7) Be sent by the district director, to the Commandant (G-BBT-3/42), U.S. Coast Guard, Washington, D.C. 20593.

6. Section 12.85(e)(2) would be amended to read as follows:

(e) *Release under bond.*

(1) * * *

(2) *Time limitation to produce statement for which bond is obligated.* Within 180 days after entry, the importer or consignee shall deliver to both the district director and the Commandant, U.S. Coast Guard, a copy of the statement for production of which the bond was obligated. If the statement is not delivered to the district director for the port of entry of the product within 180 days after the date of entry, the importer or consignee shall deliver or cause to be delivered to the district director the product that was released in accordance with this paragraph.

* * * * * * *

AUTHORITY

These changes are proposed under the authority of R.S. 251, as amended; sections 623, 624, 46 Stat. 759, as amended; sections 5, 6, 7, 11, 15, 85 Stat. 215, 216, 217, 219 (5 U.S.C. 301; 19 U.S.C. 66, 1623, 1624; 46 U .S.C. 1454, 1455, 1456, 1460, 1464); 49 CFR 1.46 (n)(1)).

Regulation Determined to be Nonsignificant

This proposal has been reviewed and is not considered significant under the Department of Transportation's "Regulatory Policies and Procedures" (44 FR 11034, February 26, 1979). A draft evaluation has been prepared and has been included in the public docket. It also has been determined that the proposal does not meet the criteria for major regulations set forth in Executive Order 12291, entitled "Federal Regulation."

Regulatory Flexibility Act

The provisions of the Regulatory Flexibility Act relating to an initial and final regulatory flexibility analysis (5 U.S.C. 603, 604) are not applicable to this proposal because the rule, if promulgated, will not have a significant economic impact on a substantial number of small entities. The proposed changes are designed to clarify certain filing requirements, eliminate bond requirements in some instances, and implement a more reasonable time limit for the completion of repairs or alterations. The proposal is not expected to: have significant secondary or incidental effects on a substantial number of small entities; impose, or otherwise cause, a significant increase in the reporting, recordkeeping, or other compliance burdens on a substantial number of small entities; or generate significant interest or attention from small entities through comments, either formal or informal.

Accordingly, the Secretary of the Treasury has certified under the provisions of section 3 of the Regulatory Flexibility Act (5 U.S.C. 605 (b)), that the rule, if promulgated, will not have a significant economic impact on a substantial number of small entities.

Comments

Before adopting this proposal, consideration will be given to any written comments timely submitted to the Commissioner of Customs. Comments submitted will be available for public inspection in accordance with section 103.8(b), Customs Regulations (19 CFR 103.8(b)), during regular business hours at the Regulations and Research Division, Room 2426, Headquarters, U.S. Customs Service, 1301 Constitution Avenue NW., Washington, D.C. 20229.

Drafting Information

The principal authors of this document were Lawrence P. Dunham, Regulations and Research Division, Office of Regulations and Rulings, U.S. Customs Service and Mary Ann McCabe, Office of the Chief

Counsel, U.S. Coast Guard. However, personnel from other Customs and Coast Guard offices participated in its development.

WILLIAM T. ARCHEY,
Acting Commissioner of Customs.

Approved: March 30, 1981.
JOHN P. SIMPSON,
Acting Assistant Secretary
of the Treasury.

J. B. HAYES,
Commandant,
U S. Coast Guard.

[Published in the Federal Register December 15, 1981 (46 FR 61142)]

U.S. Customs Service

General Notice

(TMK–2–CO:R:E:E)

Notice of Application for Recordation of Trade Name

SON-EXPORT, S.A. de C.V.

Application has been filed pursuant to section 133.12, Customs Regulations (19 CFR 133.12), for the recordation under section 42 of the Act of July 5, 1946, as amended (15 U.S.C. 1124), of the trade name SON-EXPORT, S.A. de C.V., used by Son-Export, S.A. de C.V., a company governed by the laws of The Republic of Mexico, located at Plutarco Elias Calles y Rosales #124, Desp. 3003, Hermosillo, Sonorā, Mexico.

The application states that the trade name is associated with fresh frozen shellfish (shrimp). Appropriate accompanying papers were submitted with the application.

Before final action is taken on the application, consideration will be given to any relevant data, views, or arguments submitted in writing by any person in opposition to the recordation of this trade name. Any such submission should be addressed to the Commissioner of Customs, U.S. Customs Service, Washington, D.C. 20229, in time to be received not later than 30 days from the date of publication of this notice in the Federal Register.

Notice of the action taken on the application for recordation of the trade name will be published in the Federal Register.

Dated: December 14, 1981.

ANTHONY L. PIAZZA,
Acting Director, Entry,
Procedures and Penalties Division.

[Published in the Federal Register December 17, 1981 (46 FR 61532)]

Recent Unpublished Customs Service Decisions

The following listing of recent administrative decisions issued by the U.S. Customs Service, and not otherwise published, is published for the information of Customs officers and the importing community. Although the decisions are not of sufficient general interest to warrant publication as Customs Service Decisions, the listing describes the issues involved and is intended to aid Customs officers and concerned members of the public in identifying matters of interest which recently have been considered by the U.S. Customs Service.

A copy of any decision included in this listing, identified by its date and file number, may be obtained in a form appropriate for public distribution upon written request to the Office of Regulations and Rulings, Attention: Legal Retrieval and Dissemination Branch, Room 2404, U.S. Customs Service, 1301 Constitution Avenue, N.W., Washington, D.C. 20229. These copies will be made available at a cost to the requester of $0.10 per page. However, the Customs Service will waive this charge if the total number of pages copied is ten or less.

Decisions listed in earlier issues of the CUSTOMS BULLETIN, through June 15, 1981, are available in microfiche format at a cost of $34.05 ($0.15 per sheet of fiche). It is anticipated that additions to the microfiche will be made quarterly and subscriptions are available. Requests for the microfiche now available and for subscriptions should be directed to the Legal Retrieval and Dissemination Branch. Subscribers will automatically receive updates as they are issued and will be billed accordingly.

Dated: December 16, 1981.

B. JAMES FRITZ,
Director, Regulations Control
and Disclosure Law Division.

Date of decision	File No.	Issue
11–23–81	105386	Vessels: U.S. flag vessel may land fish received on high seas from foreign vessel
11–19–81	105391	Vessels: use of foreign-built vessel to train students in sailing and navigation is not coastwise trade
11–19–81	105393	Vessel Repairs: the "one round voyage" rule is not applicable since the specific parts repaired were not serviced prior to departure to the U.S., therefore, duties under 19 U.S.C. 1466 are applicable
11–19–81	105401	Vessels: the use of foreign-flag vessels outside the territorial waters of the U.S. and anchored on the outer continental shelf
11–24–81	105416	Vessels: cremated remains of deceased to be scattered at sea not merchandise under 46 U.S.C. 883, but if within territorial waters, funeral guests are "passengers" under 46 U.S.C. 289
11–18–81	542638	Trade Agreements Act: whether adjustments to standard costs are to be treated as assists

United States Court of International Trade

One Federal Plaza
New York, N.Y. 10007

Chief Judge

Edward D. Re

Judges

Paul P. Rao
Morgan Ford
Scovel Richardson
Frederick Landis
James L. Watson
Herbert N. Maletz
Bernard Newman
Nils A. Boe

Senior Judge

Samuel M. Rosenstein

Clerk

Joseph E. Lombardi

Decisions of the United States Court of International Trade

(Slip Op. 81–111)

IMPERIAL PACKAGING CORP., PLAINTIFF *v.* THE UNITED STATES, DEFENDANT

Before NEWMAN, *Judge*.

Court No. 79–9–01482

Plastic Bags

Plastic bags—item 772.20, TSUS—"Containers of rubber or plastics, with or without their closures, chiefly used for the packing, transporting, or marketing of merchandise."

357-933 O - 82 - 4

Plastic bags imprinted with the name "J.C. Penney", which were furnished by Penney to its retail customers at the point of sale for carrying purchases home, are not within the intended scope of item 772.20, TSUS, covering "[c]ontainers of rubber or plastics, with or without their closures, chiefly used for the packing, transporting, or marketing of merchandise." The term "merchandise" as used in item 772.20, TSUS, refers to products that are still in the stream of commerce and does not include articles which are personal effects or commodities in the hands of the ultimate consumer. Since articles sold by a retail store and in the hands of the ultimate consumer are no longer in the stream of commerce, and the marketing process has terminated, the imported plastic bags are not classifiable under item A772.20, as claimed by plaintiff, but were properly classified by Customs under item 774.60, TSUS, as "Other" articles not specially provided for, of rubber or plastics.

[Judgment for defendant.]

(Decided November 30, 1981)

Tompkins & Davidson, Esqs. (*Edward B. Ackerman*, Esq., of counsel) for the plaintiff.

J. Paul McGrath, Assistant Attorney General, *Joseph I. Liebman*, Attorney in Charge, International Trade Field Office, *Susan Handler-Menahem*, Esq., for the defendant.

NEWMAN, Judge: Plaintiff contests the classification by Customs at the port of Los Angeles, California of certain plastic (polyethylene) bags imported from Taiwan in April 1979. Customs classified the bags under the provision in item 774.60, TSUS, for "Other" articles not specially provided for, of rubber or plastics, and assessed duty at the rate of 8.5 per centum ad valorem. Plaintiff claims that the plastic bags are entitled to duty-free entry under the provision in item A772.20, TSUS, for "[c]ontainers, of rubber or plastics, with or without their closures, chiefly used for the packing, transporting, or marketing of merchandise." The parties have stipulated that if the bags are classifiable as claimed, all the requirements for tariff treatment under the Generalized System of Preferences have been satisfied. See 19 U.S.C. § 2461, *et seq.*; General Headnote 3(c), TSUS.

THE RECORD

This action was submitted by the parties upon an agreed statement of facts without trial. In essence, the parties have stipulated that:

The imported bags were sold by plaintiff to J. C. Penney, a chain of retail stores, whose name is imprinted on the bags. Penney used the imported bags to enclose articles sold by the store; and the bags

were used by Penney's customers to carry the purchased articles from the retail store to the customers' desired destination. Additionally, the plastic bags were used by Penney to provide some indicia that the purchased goods placed in the bags had been paid for, and consequently the bags were a means of security to prevent shoplifting, particularly when the bags were secured with staples or tape. Further, the name of the retail store, printed on the bags, served the function of advertising the store. It should be noted that merchandise was not shipped to Penney in the bags, nor was merchandise displayed at retail in the bags.

After the bags were used as described, the bags, of course, may have been utilized by consumers for various purposes both inside and outside the home, or they may have been discarded after serving their original purpose.

The record also includes as the sole exhibit a representative sample of the imported merchandise, which is attached to the complaint, such sample comprising a plastic bag with the name "J. C. Penney" imprinted thereon.

The Issues

The dispute between the parties is focused on whether the imported articles are containers for "merchandise" within the meaning of that term in the statute; and whether the imported bags were chiefly used for the purposes specified in the statute.

Opinion

Central to the dispute is the construction of the term "merchandise" as used in item 772.20, TSUS. Plaintiff maintains that "goods do not automatically cease to be merchandise at the time of departure from the seller's place of business, even to the ultimate consumer" (Brief, p. 16). Defendant, however, argues that the term "merchandise" as used in item 772.20 refers to products which are still in the "stream of commerce", rather than articles which are personal effects or commodies in the hands of the ultimate consumer.

I agree with defendant's construction of the term "merchandise". *Cf. United States* v. *Mattio*, 17 F. 2d 879 (9th Cir. 1927); *United States* v. *Julian Roberts*, 23 CCPA 300, 305, T.D. 48166 (1936). See also *Will & Baumer Candle Co.* v. *United States*, 37 CCPA 27, C.A.D. 414 (1949); *Poland Brothers Inc.* v. *United States*, 64 Cust. Ct. 248, C.D. 3986 (1970). Significantly, the subject plastic bags were not used to contain articles in the stream of commerce; they were not used to transport goods to a retail store; nor were they used to exhibit articles for sale in the store. Indeed, the plastic bags were utilized by Penney only at the point of sale after the articles were in the hands of

the ultimate consumer destined for his home. Patently, at that juncture the marketing process had terminated.[1]

See *Koret of California* v. *United States*, 66 Cust. Ct. 373, C.D. 4217 (1971). Hence, I agree with defendant's contention that the purchased articles had left the stream of commerce, and were no longer "merchandise" within the meaning of that term as used in the statute.

An examination of the *Summary of Trade and Tariff Information*, TSUS items 772.20, 772.85, and 772.86 (April 1981)[2] prepared by the United States International Trade Commission bolsters the conclusion that item 772.20 was not intended to encompass merchandise bags which retail stores furnish to their customers for carrying purchases home. Thus, the *Summary* states (at pages 2 and 10):

> Plastic containers serve the dual function of helping to protect and of selling the product. With the ascendancy of the self-service department stores and supermarkets, goods are openly displayed and are expected to sell themselves. Thus, the package has replaced the sales clerk. These containers are used to package nearly every good imaginable from hardware and bakery goods to electric components and dairy products. They compete against traditional packaging products, including glass bottles, metal cans, wooden pallets, paper bags, and paperboard cases, as well as against one another. In addition, the plastics are frequently combined with one another and with traditional materials by means of coatings, laminations, and coextrusions to obtain a mix of properties not available in any single material or available only at an unacceptable cost. There are a number of product areas for these containers from which plastics would be excluded were it not for the combinations of plastics with plastics or plastics with traditional materials. Another unique feature of the products covered herein is that in and of themselves they serve no further function. For example, after the milk within the gallon plastics container has been consumed, the container serves no purpose and is usually thrown away. Naturally, therefore, price is a critical factor in choosing plastics, other materials, or some combination thereof.
>
> * * * * * * *
>
> Bags and similar nonrigid articles which are not covered here under TSUS item 772.20 include disposable household bags such as garbage and garden bags, sandwich bags, and food bags.

---

[1] Whether purchased articles are placed in bags before, during or after the articles are paid for, it is clear that the retail store does not intend to release the bag and its contents until after the articles have been purchased.

[2] While not part of the legislative history of the TSUS, the *Summaries* have repeatedly been consulted by the Courts as an aid in determining the scope of tariff provisions. *See e.g. Hawaiian Motor Co.* v. *United States*, 67 CCPA —, C.A.D. 1241, 617 F. 2d 286 (1980); *Sortex Co. of North America* v. *United States*, 80 Cust. Ct. 134, 138, C.D. 4746, 453 F. Supp. 644 (1978), *aff'd* 66 CCPA —, C.A.D. 1221, 596 F. 2d 1002 (1979); *American Bristle & Hair Drawing Co., Keer Maurer & Co.* v. *United States*, 59 CCPA 104, 108, C.A.D. 1048, 458 F. 2d 524, 527 (1981); *Tanross Supply Co. Inc.* v. *United States*, 58 CCPA 26, 31 C.A.D. 1000, 433 F. 2d 1332, 1336 (1970). See also *Lyons Export & Import, Inc.* v. *United States*, 59 CCPA 142, 144, C.A.D. 1056, 461 F. 2d 830, 831 (1972).

> *Also excluded are any bags furnished "at the point of sale," such as drycleaning garment bags and merchandise bags which department stores furnish to customers for carrying purchases home.* Clear plastic bags for produce, usually in rolls on elevated racks and perforated for easy removal, are also excluded if used in the supermarket at the point of sale. The above-described plastics bags enter under TSUS item 774.55, and also will be covered under a summary on miscellaneous rubber and plastics product.
> [Emphasis added.]

In a word, then, the imported bags do not come within the intended scope of item 772.20. They are not used to market or sell a product or protect a product so that it might be sold. Rather, after the product has been sold, the imported bags are used by the ultimate consumer to carry the product home. To repeat, at the point of sale the purchased product contained within the bag is not "merchandise" within the meaning of the statute, but is a personal effect.

Finally, the Court agrees with defendant's contention that the record fails to establish the *chief use* of the plastic bags in light of the several uses for the bags as stipulated by the parties. *Cf. Poland Brothers, supra.*

For the foregoing reasons, this action is dismissed.

Judgment will be entered accordingly.

(Slip Op. 81–112)

MATSUSHITA ELECTRIC INDUSTRIAL CO. LTD., ET AL., PLAINTIFFS *v.* UNITED STATES, ET AL., DEFENDANTS

Before WATSON, *Judge.*

Consolidated Court No. 81–7–00901

Motion to Intervene

[Denied.]

(Dated December 4, 1981)

Collier, Shannon, Rill & Scott (*Paul D. Cullen* and *Robert L. Meuser* of counsel) for the applicants for intervention.

Weil, Gotshal & Manges (*A. Paul Victor, Stuart M. Rosen, Harry M. Davidow* and *Michael P. Maxwell*) for plaintiffs Matsushita Electric Industrial Co., Ltd., Matsushita Electric Corporation of America, Panasonic Hawaii, Inc., and Panasonic Sales Company, a Division of Matsushita Electric of Puerto Rico, Inc., Victor Company of Japan and U.S. JVC Corporation.

Sharrets, Paley, Carter & Blauvelt, P.C. (*Gail T. Cumins* of counsel) for plaintiffs Sanyo Electric Co., Ltd., Sanyo Electric Inc., and Sanyo Manufacturing Corporation.

Tanaka Walders & Ritger (*H. William Tanaka* and *Lawrence R. Walders* of counsel) for plaintiffs Hitachi Ltd., Hitachi Sales Corporation of America, and Hitachi Sales Corporation of Hawaii.

Arent, Fox, Kintner, Plotkin & Kahn (*Stephen L. Gibson* and *Rodney F. Page* of counsel) for plaintiffs Toshiba Corporation, Toshiba America, Inc., and Toshiba Hawaii, Inc.

Baker & McKenzie (*Thomas P. Ondeck* of counsel) for plaintiff Mitsubishi Electric Corporation.

Wender, Murase & White (*Peter J. Gartland* and *Robert D. Piliero* of counsel) for plaintiff Sharp Electronics Corporation.

Siegel, Mandell & Davidson, P.C. (*Brian Goldstein* and *Edward B. Ackerman* of counsel) for plaintiff General Corporation of Japan.

United States International Trade Commission, Office of the General Counsel (*Michael H. Stein*, General Counsel; *Edward M. Lebow*, Assistant General Counsel and *Michael B. Jennison*, Attorney Advisor) for the defendant United States.

Frederick L. Ikenson, P.C. (*Frederick L. Ikenson* and *J. Eric Nissley* of counsel) and *Philip J. Curtis* for the defendant-intervenor Zenith Radio Corporation.

WATSON, Judge: The Court is faced with a motion to intervene in this consolidated action. The action itself was brought by various importers and manufacturers of Japanese television receivers under 19 U.S.C. §1516A to challenge the determination of the International Trade Commission (ITC) that an industry in the United States would be threatened with material injury if an antidumping order affecting television sets from Japan were to be modified or revoked.[1]

The applicants for intervention are the Committee to Preserve American Color Television (COMPACT); the Imports Committee, Tube Division, Electronic Industries Association (the Imports Committee); and three unions, the Independent Radionic Workers of America, the International Brotherhood of Electrical Workers and the International Union of Electrical, Radio and Machine Workers (referred to as the three unions).

Plaintiffs oppose the motion for intervention. The defendant United States took no position with respect to the Imports Committee, but supported the application of COMPACT and the three unions.

Intervention in this action is strictly controlled by statute [2] and is limited to those who are "interested parties" and were "parties to the proceeding." 28 U.S.C. § 2631(j)(1)(B). That section provides in relevant part:

> (j)(1) Any person who would be adversely affected or aggrieved by a decision in a civil action pending in the Court of International Trade may, by leave of Court, intervene in such action, except that—

---

[1] The determination being challenged was published as Television Receiving Sets from Japan, Inv. No 751-TA-2, USITC Pub. 1153 (1981), 46 Fed. Reg. 37,702 (June 24, 1981). The determination was made in a review conducted under section 751(b) of the Tariff Act of 1930, 19 U.S.C. § 1675(b). The subject of the review was the 1971 finding of dumping with respect to television sets from Japan. T.D. 71-75 (1971).

[2] There is no permissive intervention in this matter. See H.R. Rep. No. 96-1235, 96th Cong., 2d Sess. 52 (1980). The existence of a specific provision governing intervention also precludes the applicability of any other provisions or statutes such as 23 U.S.C. § 2631(i) or the Administrative Procedure Act, 5 U.S.C. §702.

(B) in a civil action under section 516A of the Tariff Act of 1930, only an interested party who is a party to the proceeding in connection with which the matter arose may intervene and such person may intervene as a matter of right; * * *

By virtue of 19 U.S.C. § 2631(k)(1) the term "interested party" is given the meaning set out in section 771(9) of the Tariff Act of 1930 (19 U.S.C. § 1677(9)). The latter provision reads as follows:

(9) INTERESTED PARTY.—The term "interested party" means—

(A) a foreign manufacturer, producer, or exporter, or the United States importer, of merchandise which is the subject of an investigation under this subtitle or a trade or business association a majority of the members of which are importers of such merchandise,

(B) the government of a country in which such merchandise is produced or manufactured,

(C) a manufacturer, producer, or wholesaler in the United States of a like product,

(D) a certified union or recognized union or groups of workers which is representative of an industry engaged in the manufacture, production, or wholesale in the United States of a like product, and

(E) a trade or business association a majority of whose members manufacture, produce, or wholesale a like product in the United States.

Finally, the term "like product" is defined in section 771(10) of the Tariff Act of 1930 (19 U.S.C. § 1677(10)) as a product "which is like, or in the absence of like, most similar in characteristics and uses with, the article subject to an investigation under this title."

The second phrase of the standard for intervention—"party to the proceeding" is not further defined in the statute.

The Court finds that although the applicants may have interests affected by this judicial review they fall short of meeting the strictly defined statutory requirements for standing to intervene. COMPACT and the Import Committee lack standing because they are not "interested parties" within the meaning of the statute. The three unions lack standing because they did not become parties to the administrative proceeding within the meaning of the statute.

The members of COMPACT, as listed in the motion papers, are as follows:

Allied Industrial Workers of America, International Union
American Flint Glass Workers Union of North America
Communications Workers of America
Corning Glass Works
Glass Bottle Blowers' Association of the United States and Canada

Independent Radionic Workers of America
Industrial Union Department, AFL-CIO
International Association of Machinists
International Brotherhood of Electrical Workers
International Union of Electrical, Radio & Machine Workers
Owens-Illinois, Inc.
United Furniture Workers of America
United Steelworkers of America
Wells-Gardner Electronics Corp.

Of this group of fourteen, only four are presented as having a direct involvement with finished television receivers. They are the three unions (who are also making a motion to intervene in their independent capacities) and Wells-Gardner Electronics Corp. The remainder are corporations or unions involved in the production of components or materials.

As a whole, COMPACT does not fit any of the definitions of "interested party." It is not a union or a group of workers because it includes corporate employers. This eliminates definition (D). It is not a trade or business association because of its union component. This eliminates definition (E). In any event, whatever its composite nature, COMPACT, in its entirety, does not have either the representative quality of a union in the specific industry engaged in the production of a like product or the involvement of an association of businesses in the manufacture of a like product.

In the context of this statute, the like product must be television receiving sets, because they are the product subject to investigation. The industry must be that industry engaged directly in the production of television sets because that is the industry whose injury is germane. Cf *United Shoe Workers* v. *Bedell*, 506 F. 2d 174 (D.C. Cir. 1974). From this standpoint only a minority of COMPACT's members are union or worker representatives of the industry which produces television sets or actual manufacturers of the sets.

The Imports Committee is presented in the motion as an association of manufacturers in the United States television industry. Plaintiff's rely on an affidavit of the Chairman of the Imports Committee [3] to show that it includes the following five companies:

Clinton Electronics
Corning Glass Works
Lancaster Glass Corporation
Owens-Illinois
GTE Sylvania Inc.

Plaintiffs point out that only GTE Sylvania ever manufactured television sets, and even then it sold its production facilities in 1980,

[3] The affidavit is appended to plaintiffs' memorandum as Exhibit A.

prior to the administrative determination which is the subject of this action. Even if GTE Sylvania were to be considered a manufacturer of television sets, the Import Committee still does not have a majority of members who manufacture a like product. It is therefore eliminated from definition (E).

This leaves the three unions, who assertedly represent the overwhelming majority of workers engaged in the manufacture and assembly of finished television receivers and whose status as "interested parties" is not disputed. However, plaintiffs interpose the objection that the unions were not parties to the proceeding within the meaning of the statute.

The defendant United States takes the delicate position that, while it does not urge that individual members of an umbrella organization always be considered parties for purposes of intervention in a later judicial proceeding, it finds justification in this case. It stresses the fact that the interests of the unions are coextensive with those of COMPACT, that they joined together with others solely for the purposes of the proceeding, that they were represented by the same attorneys and resemble a partnership in which the action of one binds the others.

These are arguments which have a vaguely equitable tone. However, this is not a matter in which the statute can be adjusted to fashion an equitable remedy in a particular case. See, *Loveladies Property Owners Ass'n. Inc.* v. *Raab*, 430 F. Supp 276 (D.N.J. 1975) *aff'd*, 547 F. 2d 1162 (3d Cir. 1976), *cert. denied*, 432 U.S. 906 (1977). In these circumstances the Court is not at liberty to give the term "party" an expansive meaning, even if it were to deemphasize the I.T.C. rule which defines a party as one who has entered an appearance,[4] a requirement which the three unions did not satisfy.

The term "party" must have a consistent meaning in the administration of this law. If an individual member of an umbrella organization could assert the rights of a party for purposes of intervention, then a host of inconsistencies may arise. For example, if the administrative agency reaches a certain determination regarding dumping margins under section 751(a)(2)(B), (19 U.S.C. §1675(a)(2)(B)) or makes a modification under section 751(c), (19 U.S.C. §1675(c)) and the determination is acceptable to only some of the "interested party" members of the umbrella organization, we face the possibility that some of them may bring an action to challenge the determination or intervene on the side of a challenger while others may intervene on

[4] 19 C.F.R. §207.2(l) (1981).

the side of the government. The Court is of the opinion that Congress intended the statutory provisions for participation in the administrative proceeding and judicial review to benefit unitary parties and not to allow the expedient fragmentation of umbrella organizations.

In the same vein, since the administrative proceeding is an investigation, there seems to be no good reason to distinguish between parties to the proceeding and the more frequently used "parties to the investigation." Thus the adoption of a standard which would allow intervention in this judicial proceeding would lead to further difficulties. The Court refers to problems which might arise from differences of opinion between members of an umbrella group in such matters as the waiver and agreement provision of §733(b)(2), (19 U.S.C. §1673b (b)(2)),[5] the request for review of suspension in §734(h), (19 U.S.C. §1673c(h)(1)[6] and the request for hearing §774(a), (19 U.S.C. §1677c).[7]

All this strongly indicates that the administrative and judicial review provisions of the law can only operate in a consistent manner if the term "party" is limited to those who have an independent and unitary participation in the administrative proceeding. It follows that under this statute even an "interested party" may fail to acquire the right to intervene in a judicial review if it confines its participation in the administrative proceeding to membership in an association.

For the reasons discussed, the Court must deny the motion to intervene in all respects, and it is so Ordered.

---

[5] (b) PRELIMINARY DETERMINATION BY ADMINISTERING AUTHORITY.—
(2) PRELIMINARY DETERMINATION UNDER WAIVER OF VERIFICATION.—Within 75 days after the initiation of an investigation, the administering authority shall cause an official designated for such purpose to review the information concerning the case received during the first 60 days of the investigation, and, if there appears to be sufficient information available upon which the preliminary determination can reasonably be based, to disclose to the petitioner and any interested party, then a party to the proceedings that requests such disclosure, all available nonconfidential information and all other information which is disclosed pursuant to section 777. Within 3 days (not counting Saturdays, Sundays, or legal public holidays) after such disclosure, the petitioner and each party which is an interested party described in subparagraph (C), (D), or (E) of section 771(9) to whom such disclosure was made may furnish to the administering authority an irrevocable written waiver of verification of the information received by the authority, and an agreement that it is willing to have a preliminary determination made on the basis of the record then available to the authority. If a timely waiver and agreement have been received from the petitioner and each party which is an interested party described in subparagraph (C), (D), or (E) of section 771(9) to whom the disclosure was made, and the authority finds that sufficient information is then available upon which the preliminary determination can reasonably be based, a preliminary determination shall be made within 90 days after the commencement of the investigation on the basis of the record established during the first 60 days after the investigation was commenced.

[6] (h) REVIEW OF SUSPENSION.—
(1) IN GENERAL.—Within 20 days after the suspension of an investigation under subsection (c) of this action, an interested party which is a party to the investigation and which is described in subparagraph (C), (D), or (E) of section 771(9) may, by petition filed with the Commission and with notice to the administering authority, ask for a review of the suspension.

[7] SEC. 774. HEARINGS.
(a) INVESTIGATION HEARINGS.—The administering authority and the Commission shall each hold a hearing in the course of an investigation upon the request of any party to the investigation before making a final determination under section 705 or 735.

(Slip Op. 81–113)

UNIROYAL, INC., PLAINTIFF *v.* UNITED STATES, DEFENDANT

Before MALETZ, *Judge*.

Court No. 81–8–01122

Memorandum and Order

(Dated December 4, 1981)

Barnes, Richardson & Colburn (*Andrew P. Vance* and *Raymond F. Sullivan, Jr.*, of counsel) for the plaintiff.

J. Paul McGrath, Assistant Attorney General, *Joseph I. Liebman*, Attorney in Charge, International Trade Field Office, Commercial Litigation Branch (*Barbara M. Epstein* on the briefs), for the defendant.

MALETZ, Judge: This is an action filed under 28 U.S.C. § 1581(i) [1] in which plaintiff, Uniroyal, Inc., an importer of leather uppers and rubber soles manufactured in Indonesia, seeks declaratory and injunctive relief from a United States Customs Service's determination that the merchandise must be marked with the country of origin. Defendant contends that the action should be dismissed for lack of jurisdiction and failure to exhaust administrative remedies.

The facts are these. The merchandise was entered for consumption on January 2, 1980 and January 16, 1980 (entry Nos. 615934 and 615975). On January 21, 1980 and January 22, 1980, pursuant to 19 C.F.R. § 134.51 (a),[2] the Customs Service issued a Notice of Redelivery as to each of these entries, thereby requiring Uniroyal to redeliver the merchandise to Customs' custody or to mark the merchandise with the country of origin in conformity with section 304 of the Tariff Act of 1930, as amended, 19 U.S.C. § 1304 (a).[3] The Notice

[1] 28 U.S.C. § 1581 (i) provides:

(i) In addition to the jurisdiction conferred upon the Court of International Trade by subsections (a) (h) of this section and subject to the exception set forth in subsection (j) of this section, the Court of International Trade shall have exclusive jurisdiction of any civil action commenced against the United States, its agencies, or its officers, that arises out of any law of the United States providing for—

(1) revenue from imports or tonnage;

(2) tariffs, duties, fees, or other taxes on the importation of merchandise for reasons other than the raising of revenue;

(3) embargoes or other quantitative restrictions on the importation of merchandise for reasons other than the protection of the public health or safety; or

(4) administration and enforcement with respect to the matters referred to in paragraphs (1)-(3) of this subsection and subsections (a)-(h) of this section.

[2] 19 C.F.R. § 134.51(a) provides:

(a) *Notice to mark or redeliver.* When articles or containers are found upon examination not to be legally marked, the district director shall notify the importer on Customs Form 4647 to arrange with the district director's office to properly mark the article or containers, or to return all released articles to Customs custody for marking, exportation, or destruction.

[3] 19 U.S.C. § 1304(a) provides in part:

(a) Except as hereinafter provided, every article of foreign origin (or its container, as provided in subsection (b) hereof) imported into the United States shall be marked in a conspicuous place as legibly, indelibly, and permanently as the nature of the article (or container) will permit in such manner as to indicate to an ultimate purchaser in the United States the English name of the country of origin of the article. * * *

of Redelivery advised that unless such steps were taken within 30 days, Uniroyal would be liable for liquidated damages.

Uniroyal did not redeliver or mark the merchandise as required by the Notices of Redelivery and did not file a protest of the Notices of Redelivery as permitted by 19 U.S.C. §1514 (a)(4).[4]

What Uniroyal did instead was submit on March 4, 1980 an internal advice request as to whether the "ultimate purchaser" exemption provided for in 19 U.S.C. §1304(a)(3)(H)[5] was, as Uniroyal contended, applicable to entries 615934 and 615975. In response to this request, Customs Headquarters issued a ruling, dated July 2, 1981, holding that the uppers and soles were required to be marked individually with the country of origin.

On August 28, 1981, Uniroyal filed this action seeking a declaration that the merchandise need not be marked with the country of origin. Thereafter, on November 13, 1981, plaintiff applied for a preliminary injunction to restrain the Customs Service from issuing additional notices to mark or redeliver; from initiating any demand for liquidated damages pursuant to 19 C.F.R. §134.54 (a); and from assessing any additional marking duties. Relevant to this application, it is to be noted that subsequent to entries 615934 and 615975, Uniroyal imported additional quantities of the same merchandise and received additional Notices of Redelivery from Customs.

In arguing for dismissal, defendant stresses the fact that a demand for redelivery is protestable under 19 U.S.C. §1514(a)(4) and that the denial of such a protest may be reviewed by this court pursuant to 28 U.S.C. §1581(a).[6] Because of the availability of such protest and review, the argument proceeds, this court's broad residual jurisdiction provided for in 28 U.S.C. § 1581(i) may not be invoked here. This same contention was, however, rejected in *Wear Me Apparel Corp.* v. *United States*, 1 CIT —, Slip Op. 81–22 at 7, 511 F. Supp. 814, 817 (1981), where the court stated that "* * * section 1581(i) does not require the filing or denial of a protest as a prerequisite for the exercise of jurisdiction by this court."

---

[4] Effective November 1, 1980, 19 U.S.C. § 1514(a)(4) provided specifically for the filing of protests to review "the exclusion of merchandise from entry of delivery or a demand for redelivery to customs custody under any provision of the customs laws," * *. Prior to that date, notices to redeliver were protestable as decisions to exclude merchandise from entry or delivery. See *Wear Me Apparel Corp. v. United States*, 1 CIT —, Slip Op. 80-13 (Dec. 15, 1980).

[5] 19 U.S.C. § 1301(a)(3)(H) provides that articles may be exempted from the requirement that they be marked with their country of origin if:

> An ultimate purchaser, by reason of the character of such article or by reason of the circumstance of its importation, must necessarily know the country of origin of such article even though it is not marked to indicate its origin; * * *

[6] 28 U.S.C. § 1581(a) provides that:

> (a) The Court of International Trade shall have exclusive jurisdiction of any civil action commenced to contest the denial of a protest, in whole or in part, under section 515 of the Tariff Act of 1930.

Defendant also contends, in the alternative, that plaintiff has failed to exhaust its administrative remedies as required by 28 U.S.C. § 2637(d) which states that this court "shall, where appropriate, require the exhaustion of administrative remedies." The question presented then is whether given the circumstances here, it would be appropriate for the court to require further administrative proceedings.

As noted earlier, Uniroyal filed a request for internal advice from Customs Headquarters on March 4, 1980, pursuant to section 177.11 of the Customs Regulations (19 C.F.R. § 177.11).[7] In its request, Uniroyal contended that the merchandise need not be marked with the country of origin because the ultimate purchaser exception of section 304(a)(3)(H) of the Tariff Act of 1930, as amended, 19 U.S.C. § 1304(a)(3)(H), was applicable. This contention was, however, specifically rejected by Customs Headquarters in a ruling dated July 2, 1981. The significance of this response to plaintiff's request for internal advice is made clear by 19 C.F.R. § 177.11(b)(6) which states:

Here, the field office has not requested reconsideration and the ruling is therefore controlling authority governing not only field office determinations as to whether the marking of plaintiff's merchandise is required but also the disposition of any protest which might be filed challenging such field office determinations. Stated otherwise, a protest by plaintiff of Customs' marking requirement on the ground that such requirement violates the ultimate user exception would present nothing for resolution as Customs has already authoritatively determined this precise question. Because of this, the court concludes that no legitimate interest of defendant will be served by requiring plaintiff to file a protest here and that mandating further administrative proceeding would be purposeless and thus not appropriate. See, e.g., *Porter Cty. Chap. of Izaak Walton League* v. *Costle*, 571 F. 2d 359, 363 (7th Cir. 1978), *cert. denied*, 439 U.S. 834 (1978); *Am. Fed. of Government Emp.* v. *Dunn*, 561 F. 2d 1310, 1314 (9th Cir. 1977).

This does not mean that litigants may file requests for internal

---

[7] 19. C.F.R. § 177,11(b) provides:

(2) * * * Internal advice will be sought by a Customs Service field office with respect to a current transaction for which no ruling was requested or issued under the provisions of this part whenever a difference of opinion exists as to the interpretation or proper application of the Customs and related laws to the transaction, and the field office is requested to seek such advice by an importer or other person who would have been entitled, under § 177.1(c), to request a ruling with respect to the transaction, while prospective. * * *

(6) *Effect of advice received from the Headquarters Office.* Advice furnished by the Headquarters Office in response to a request therefor represents the official position of the Customs Service as to the application of the Customs laws to the facts of a specific transaction. If the field office believes that the advice furnished by the Headquarters Office should be reconsidered, it shall promptly request such reconsideration. Otherwise, the advice furnished by the Headquarters Office will be applied by the field office in its disposition of the Customs transaction in question.

advice in order to avoid the general requirement that they obtain a denied protest before seeking judicial review. In this connection, 19 C.F.R. §177.11(b)(5)(ii) provides:

> The Headquarters Office may refuse to consider the questions presented to it in the form of a request for internal advice whenever * * * (ii) the questions presented can subsequently be raised by the importer or other interested party in the form of a protest filed in accordance with the provisions of Part 174 of this chapter.

Thus, where Customs declines to provide internal advice a litigant will normally be required to obtain a denied protest. Here, however, where Customs elected to furnish dispositive advice and did not rely upon its own regulation permitting it to withhold such advice in favor of having a protest filed, the court sees no reason why a denied protest should now be required of plaintiff.

Accordingly, defendant's motion to dismiss is denied. Defendant is directed to file an answer to the complaint on or before December 11, 1981. A hearing on plaintiff's application for a preliminary injunction will be held on December 17, 1981 at 9:30 A.M. That hearing, pursuant to rule 65(a)(2), will be consolidated with a trial of the action on the merits.

Decisions of the United States Court of International Trade

Abstracts

Abstracted Reappraisement Decision

DEPARTMENT OF THE TREASURY, *December 7, 1981.*

The following abstracts of decisions of the United States Court of International Trade at New York are published for the information and guidance of officers of the Customs and others concerned. Although the decisions are not of sufficient general interest to print in full, the summary herein given will be of assistance to Customs officials in easily locating cases and tracing important facts.

WILLIAM VON RAAB,
Commissioner of Customs.

DECISION NUMBER	JUDGE & DATE OF DECISION	PLAINTIFF	COURT NO.	BASIS OF VALUATION	HELD VALUE	BASIS	PORT OF ENTRY AND MERCHANDISE
R81/451	Watson, J. December 3, 1981	American Thermo-Ware Co.	R58/20411, etc.	Export value	F.o.b. unit invoice prices plus 20% of difference between f.o.b. unit invoice prices and appraised values	Agreed statement of facts	New York Binoculars
R81/452	Watson, J. December 3, 1981	American Thermo-Ware Co.	R59/12122, etc.	Export value	F.o.b. unit invoice prices plus 20% of difference between f.o.b. unit invoice prices and appraised values	Agreed statement of facts	New York Binoculars
R81/453	Watson, J. December 3, 1981	Astra Trading Corp.	R58/14155, etc.	Export value	F.o.b. unit invoice prices plus 20% of difference between f.o.b. unit invoice prices and appraised values	Agreed statement of facts	New York Binoculars
R81/454	Watson, J. December 3, 1981	Astra Trading Corp.	R58/18303, etc.	Export value	F.o.b. unit invoice prichs plus 20% of difference between f.o.b. unit invoice prices and appraised values	Agreed statement of facts	New York Binoculars
R81/455	Watson, J. December 3, 1981	Astra Trading Corp.	R58/19139, etc.	Export value	F.o.b. unit invoice prices plus 20% of difference between f.o.b. unit in oice prices and appraised values	Agreed statement of facts	New York Binoculars

R81/456	Watson, J. December 3, 1981	Astra Trading Corp.	R58/27879, etc.	Export value	F.o.b. unit invoice prices plus 20% of difference between f.o.b. unit invoice prices and appraised values	Agreed statement of facts	New York Binoculars
R81/457	Watson, J. December 4, 1981	Astra Trading Corp.	R59/7393, etc.	Export value	F.o.b. unit invoice prices plus 20% of difference between f.o.b. unit invoice prices and appraised values	Agreed statement of facts	New York Binoculars
R81/458	Watson, J. December 4, 1981	Astra Trading Corp.	R59/12677, etc.	Export value	F.o.b. unit invoice prices plus 20% of difference between f.o.b. unit invoice prices and appraised values	Agreed statement of facts	New York Binoculars
R81/459	Watson, J. December 4, 1981	Durst Manufacturing Co., Inc.	R67/2419, etc.	Export value	Unit invoice prices as shown in entry documents, or f.o.b. price as indicated as being actual price or value as per attached invoice, in said entry documents, plus 20% of difference between said f.o.b. unit invoice prices and appraised values, net packed	Agreed statement of facts	New York Galvanized and black malleable iron pipe fittings

DECISION NUMBER	JUDGE & DATE OF DECISION	PLAINTIFF	COURT NO.	BASIS OF VALUATION	HELD VALUE	BASIS	PORT OF ENTRY AND MERCHANDISE
R81/460	Watson, J. December 4, 1981	Kanematsu York Inc.	New R58/26947, etc.	Export value	F.o.b. unit invoice prices plus 20% of difference between f.o.b. unit invoice prices and appraised values	Agreed statement of facts	New York Sewing machine heads, etc.
R81/461	Watson, J. December 4, 1981	Kanematsu York Inc.	New R58/28826, etc.	Export value	F.o.b. unit invoice prices plus 20% of difference between f.o.b. unit invoice prices and appraised values	Agreed statement of facts	New York Sewing machine heads w/accessories, etc.
R81/462	Watson, J. December 4, 1981	Kanematsu York Inc.	New R59/3165, etc.	Export value	F.o.b. unit invoice prices plus 20% of difference between f.o.b. unit invoice prices and appraised values	Agreed statement of facts	Philadelphia Sewing machine heads
R81/463	Watson, J. December 4, 1981	Kanematsu York Inc.	New R59/3878, etc.	Export value	F.o.b. unit invoice prices plus 20% of difference between f.o.b. unit invoice prices and appraised values	Agreed statement of facts	Los Angeles Sewing machine heads

Motion To Vacate, Set Aside and Stay, and for Rehearing

November 6, 1981

Siemens America, Inc., et al. *v.* United States, Court No. 72–5–01093.—SURGE VOLTAGE PROTECTORS.—Slip Op. 81–91, decided on remand (Customs Appeal No. 80–33, C.A.D. 1266). Motion by plaintiffs for order vacating and setting aside decision and judgment in *Siemens America, Inc., et al.* v. *United States*, Slip Op. 81–91, entered on October 7, 1981, granting a rehearing, and staying all matters until 15 days after the decision of the United States Supreme Court on the merits of this case.

International Trade Commission Notices

Investigations by the U.S. International Trade Commission

DEPARTMENT OF THE TREASURY, DECEMBER 16, 1981

The appended notices relating to investigations by the U.S. International Trade Commission are published for the information of Customs officers and others concerned.

WILLIAM VON RAAB,
Commissioner of Customs.

Investigation No. 751-TA-5

Salmon Gill Fish Netting of Manmade Fibers from Japan

Notice of Public Hearing and Extension of Deadline for Completion of Investigation

AGENCY: United States International Trade Commission.

ACTION: Scheduling of public hearing and extension of deadline for completion of investigation No. 751-TA-5, Salmon gill fish netting of manmade fibers from Japan.

SUMMARY: Notice is hereby given that the U.S. International Trade Commission will conduct a public hearing in connection with the subject investigation. The hearing will be held on February 16, 1982 in Portland, Oregon. The Commission also gives notice that it has waived the 120 day limit for completion of this investigation. The new administrative deadline for completion is March 31, 1982.

EFFECTIVE DATE: December 11, 1981.

SUPPLEMENTARY INFORMATION: On November 18, 1981, the Commission received a request to waive the 120 day time limit for completion of the subject investigation upon the condition that a public hearing be held in Portland, Oregon or Seattle, Washington subsequent to December 1981. On November 24, 1981, the Commission voted to postpone the December 17, 1981 hearing scheduled to be held in Washington, D.C. (46 FR 58618). Since salmon fishing is centered in the rivers and offshore waters of the Pacific Northwest the majority of importers and users of salmon gill fish netting are

located in that area. A public hearing in Portland will provide these groups with the opportunity to present oral testimony to the Commission.

Written submissions.—Any person may submit to the Commission on or before February 24, 1982, written statements of information pertinent to the subject matter of the investigation. A signed original and nineteen true copies of such statements must be submitted in accordance with section 201.8 of the Commission's Rules of Practice and Procedure, 19 CFR § 201.8 (1980).

Any business information which a submitter desires the Commission to treat as confidential shall be submitted separately and each sheet must be clearly marked at the top "Confidential business data." Confidential submissions must conform with the requirements of section 201.6 of the Rules of Practice and Procedure (19 CFR § 201.6). All written submissions, except confidential business data, will be available for public inspection. A staff report containing preliminary findings of fact will be available to all interested parties on January 26, 1982.

Public hearing.—The Commission will hold a public hearing in connection with this investigation on February 16, 1982, beginning at 10:00 a.m., p.s.t., in room 223 of the New Federal Building, 1220 South West 3rd Street, Portland, Oregon. Requests to appear at the hearing should be filed in writing with the Secretary to the Commission not later than the close of business (5:15 p.m., e.s.t.) on January 29, 1982. All persons desiring to appear at the hearing and make oral presentations should attend a prehearing conference to be held at 2:00 p.m., e.s.t., on February 2, 1982, in Room 117 of the U.S. International Trade Commission Building and must file prehearing statements on or before February 10, 1982. For further information concerning the conduct of the investigation, hearing procedures, and rules of general application, consult the Commission's Rules of Practice and Procedure Part 207, Subpart C (19 CFR § 207), and Part 201, Subparts A through E (19 CFR § 201).

The Commission has waived Commission rule 201.12(d), "submission of prepared statements," in connection with this investigation. This rule states that "Copies of witnesses' prepared statements should be filed with the Office of the Secretary of the Commission not later than 3 business days prior to the hearing and submission of such statements shall comply with sections 201.6 and 201.8 of this subpart". It is nevertheless the Commission's request that parties submit copies of witnesses' prepared testimony as early as practicable before the hearing in order to permit Commission review.

FOR FURTHER INFORMATION CONTACT: Daniel Leahy, investigator, Office of Investigations, U.S. International Trade Commission, (202) 523–1369 or Jane Albrecht, attorney, Office of the General Counsel, U.S. International Trade Commission, (202) 523–1627.

By Order of the Commission.

Issued: December 14, 1981.

KENNETH R. MASON,
Secretary.

731–TA–44 (Final)

SORBITOL FROM FRANCE

Institution of Final Antidumping Investigation and Scheduling of Hearing

AGENCY: United States International Trade Commission.

ACTION: Institution of a final antidumping duty investigation.

SUMMARY: On November 30, 1981, the United States Department of Commerce issued a preliminary determination that there is reason to believe or suspect that sorbitol from France is being sold in the United States at less than fair value within the meaning of section 731 of the Tariff Act of 1930 (19 U.S.C. 1673b). Accordingly, the United States International Trade Commission (hereinafter "the Commission") hereby gives notice of the institution of investigation No. 731–TA–44 (Final) to determine whether an industry in the United States is materially injured or is threatened with material injury, or the establishment of an industry in the United States is materially retarded, by reason of imports of such merchandise provided for in item 493.68 of the Tariff Schedules of the United States (TSUS). This investigation will be conducted according to the provisions of Part 207 of the Commission's Rules of Practice and Procedure (19 CFR 207), Subpart C, effective January 1, 1980.

EFFECTIVE DATE: November 30, 1981.

FOR FURTHER INFORMATION CONTACT: Mr. Tim Timberlake, Office of Investigations, U.S. International Trade Commission, Room 349, 701 E Street, NW., Washington, D.C. 20436; telephone (202) 523–0368.

SUPPLEMENTARY INFORMATION: On July 23, 1981, the Commission determined on the basis of the information developed during the course of investigation No. 731–TA–44 (Preliminary), that there is a reasonable indication that an industry in the United States is

materially injured or is threatened with material injury by reason of imports of sorbitol from France, provided for in TSUS item 493.68 which is allegedly sold or likely to be sold at less than fair value. As a result of the Commission's determination, the Department of Commerce continued its investigation into the question of less-than-fair-value sales. The final determination by the Department of Commerce of whether sorbitol from France is being, or is likely to be, sold in the United States at less than fair value will be made within 75 days after the date of its preliminary determination, or, in this case, by February 5, 1982.

Written submissions: Any person may submit to the Commission a written statement of information pertinent to the subject of this investigation. A signed original and nineteen (19) true copies of each submission must be filed at the Office of the Secretary, U.S. International Trade Commission Building, 701 E Street, NW., Washington, D.C. 20436, on or before February 17, 1982. All written submissions, except for confidential business data, will be available for public inspection.

Any submission of business information for which confidential treatment is desired shall be submitted separately from other documents. The envelope and all pages of such submissions must be clearly labeled "Confidential Business Information". Confidential submissions and requests for confidential treatment must conform with the requirements of section 201.6 of the Commission's Rules of Practice and Procedure (19 CFR 201.6).

A staff report containing preliminary findings of fact will be available to all interested parties on February 2, 1982.

Public hearing: The Commission will hold a public hearing in connection with this investigation on February 24, 1982, in the Hearing Room of the U.S. International Trade Commission Building, 701 E Street, NW., Washington, D.C. 20436, beginning at 10:00 a.m., e.s.t. Requests to appear at the hearing should be filed in writing with the Secretary to the Commission not later than the close of business (5:15 p.m., e.s.t.), February 1, 1982. All persons desiring to appear at the hearing and make oral presentations should attend a prehearing conference to be held at 10:00 a.m., e.s.t., on February 3, 1982, in Room 117 of the U.S. International Trade Commission Building and must file prehearing statements on or before February 17, 1982. For further information concerning the conduct of the investigation, hearing procedures, and rules of general application, consult the Commission's Rules of Practice and Procedure Part 207, Subpart C (19 CFR 207), and Part 201, Subparts A through E (19 CFR 201).

The Commission has waived Commission rule 201.12(d), "submission of prepared statements," in connection with this investigation.

This rule states that "Copies of witnesses' prepared statements should be filed with the Office of the Secretary of the Commission not later than 3 business days prior to the hearing and submission of such statements shall comply with sections 201.6 and 201.8 of this subpart". It is nevertheless the Commission's request that parties submit copies of witnesses' prepared testimony as early as practicable before the hearing in order to permit Commission review.

This notice is published pursuant to section 207.20 of the Commission's Rules of Practice and Procedure (19 CFR 207.20).

By order of the Commission.

Issued: December 10, 1982.

KENNETH R. MASON,
Secretary.

In the Matter of CERTAIN STEEL ROD TREATING APPARATUS AND COMPONENTS THEREOF	Investigation 337–TA–97

Notice of Issuance of Exclusion Order

AGENCY: U.S. International Trade Commission.

ACTION: Issuance of exclusion order

SUPPLEMENTARY INFORMATION: The Commission instituted this investigation to determine whether there is a violation of section 337 of the Tariff Act of 1930 (19 U.S.C. § 1337) in the importation or sale of certain steel rod treating apparatus and components thereof. Notice of the institution of the investigation was published in the Federal Register of January 28, 1981 (46 F.R. 9262).

On December 1, 1981, the Commission unanimously determined that there is a violation of section 337 in the unauthorized importation or sale of certain steel rod treating apparatus and components thereof which infringe U.S. Letters Patent 3,390,871. The Commission further determined that the appropriate remedy is an exclusion order pursuant to section 337(d) excluding from entry into the United States certain steel rod treating apparatus which are manufactured by or on behalf of Korf Industrie und Handel, GmbH, Korf Engineering, GmbH, Korf Industries, Inc., Ashlow Ltd., Ashlow Corp., Mr. Willy Korf, and/or Mr. Johann Heinrich Rohde, or any successor, assignee, parent company, affiliated person, subsidiary, or related business

entity of the above-named parties respondent, or which are sought to be imported by Georgetown Steel Corporation.

Copies of the Commission's Action and Order, the Commission's opinion, and all other public documents on the record of the investigation are available for inspection by the public during official working hours (8:45 a.m. to 5:15 p.m.) in the Office of the Secretary, U.S. International Trade Commission, 701 E Street NW., Room 161, Washington, D.C. 20436, telephone 202–523–0161.

FOR FURTHER INFORMATION CONTACT: Warren H. Maruyama, Esq., Office of the General Counsel, U.S. International Trade Commission, telephone 202–523–0375.

By order of the Commission.

Issued: December 10, 1981.

KENNETH R. MASON,
Secretary.

In the Matter of
CERTAIN STEEL ROD TREATING APPARATUS AND COMPONENTS THEREOF } Investigation No. 337–TA–97

Notice of Denial of Motion for Leave to Submit a Supplemental Post-Hearing Brief

AGENCY: U.S. International Trade Commission.

ACTION: Denial of motion for leave to submit a supplemental post-hearing brief.

SUPPLEMENTARY INFORMATION: Pursuant to section 337 of the Tariff Act of 1930, 19 U.S.C. § 1337, the Commission is currently conducting an investigation of alleged unfair acts and alleged practice of unfair methods of competition in connection with the importation or sale of certain steel rod treating apparatus and components thereof.

Notice of the institution of this investigation was published in the Federal Register of January 28, 1981 (46 F.R. 9263).

On November 18, 1981, respondents Ashlow Ltd., Korf Industries, Inc., Ashlow Corp., and Georgetown Steel Corp. moved (Motion No. 97–62c) for leave to submit a supplemental brief based on allegedly newly discovered evidence.

The Commission has denied the motion.

FOR FURTHER INFORMATION CONTACT: Warren H. Maruyama, Esq., Office of the General Counsel, U.S. International

Trade Commission, 701 E Street NW., Washington, D.C. 20436; telephone 523-0375.

By order of the Commission.

Issued: December 9, 1981.

KENNETH R. MASON,
Secretary.

In the Matter of CERTAIN CARD DATA IMPRINTERS AND COMPONENTS THEREOF	Investigation No. 337-TA-104

Notice of Designation of Investigation as More Complicated

AGENCY: U.S. International Trade Commission.

ACTION: Designation of this investigation as more complicated within the meaning of 19 U.S.C. § 1337(b)(1) and 19 CFR § 210.15.

AUTHORITY: The authority for Commission designation is contained in section 337(b)(1) of the Tariff Act of 1930, 19 U.S.C. § 1337(b)(1), and in section 210.15 of the Commission's *Rules of Practice and Procedure*, 19 CFR § 210.15.

SUPPLEMENTARY INFORMATION: Upon receipt of a complaint filed by AM International, Inc., and Bartizan Corporation, the U.S. International Trade Commission voted on June 4, 1981, to institute an investigation to determine whether there is a violation of section 337(a) of the Tariff Act of 1930, 19 U.S.C. § 1337(a), in the importation into the United States of card data imprinters and components thereof, or in their sale, by reason of the alleged infringement of claim 7 of U.S. Letters Patent 3,272,120 and claim 12 of U.S. Letters Patent 3,340,800, the effect or tendency of which is to destroy or substantially injure an industry, efficiently and economically operated, in the United States. Notice of institution of the Commission's investigation was published in the Federal Register of June 12, 1981 (46 F.R. 31094).

On October 28, 1981, the respondents filed a motion (Motion 104-91) to designate the investigation "more complicated," within the meaning of section 337(b)(1) of the Tariff Act of 1930, 19 U.S.C. § 1337(b)(1), and section 210.15 of the Commission's *Rules of Procedure*, 19 CFR § 210.15. The motion was supported by the Commission investigative attorney and was unopposed by the complainant. On November 20, 1981, the presiding officer certified to the Commis-

sion his recommendation that investigation No. 337-TA-104 be designated more complicated.

In determining whether an investigation is more complicated, the Commission must find that it "is of an involved nature owing to the subject matter, difficulty in obtaining information, or large number of parties involved." 19 CFR § 210.15. In the present investigation, substantial allegations have been raised regarding possible anticompetitive actions and antitrust violations by certain parties. These allegations require an investigation that is beyond the scope of the claims of patent infringement made in the complaint and will likely necessitate extensive additional discovery. In addition, the motion to declare the investigation more complicated is supported by the Commission investigation attorney and is not opposed by the complainants. In the absence of compelling reasons of the public interest for pursuing a swift completion of this investigation, the lack of opposition by any party to the motion provides additional grounds for its being granted.

For those reasons, the Commission concludes that this investigation should be designated more complicated. The practical effect of this determination is that the deadline for making a final determination in this investigation will be extended from June 12, 1982, to December 12, 1982.

Copies of the Commission's Action and Order and all other nonconfidential documents filed in connection with this investigation are available for inspection during official business hours (8:45 a.m. to 5:15 p.m.) in the Office of the Secretary, U.S. International Trade Commission, 701 E Street NW., Washington, D.C. 20436, telephone 202-523-0161.

FOR FURTHER INFORMATION CONTACT: Michael P. Mabile, Esq., Office of the General Counsel, U.S. International Trade Commission, telephone 202-523-1626.

By order of the Commission.

Issued: December 8, 1981.

KENNETH R. MASON,
Secretary.

In the Matter of
CERTAIN MOLDED-IN SANDWICH PANEL INSERTS AND METHODS FOR THEIR INSTALLATION } Investigation No. 337-TA-99

Commission Hearing on the Presiding Officer's Recommendation and on Relief, Bonding, and the Public Interest, and the Schedule for Filing Written Submissions

AGENCY: U.S. International Trade Commission.

ACTION: The scheduling of a public hearing and written submissions in investigation No. 337–TA–99, Certain Molded-In Sandwich Panel Inserts and Methods for Their Installation.

Notice is hereby given that the presiding officer has issued a recommended determination that there is a violation of section 337 of the Tariff Act of 1930, 19 U.S.C. § 1337, in the unauthorized importation into the United States and sale of certain molded-in sandwich panel inserts that are the subject of the Commission's investigation. Accordingly, the recommended determination and the record of the hearing have been certified to the Commission for review and a Commission determination. Interested persons may obtain copies of the nonconfidential version of the presiding officer's recommendation (and all other public documents on the record of the investigation) by contacting the Office of the Secretary, U.S. International Trade Commission, 701 E Street NW., Room 161, Washington, D.C. 20436, telephone 202–523–0161.

COMMISSION HEARING: The Commission will hold a public hearing on January 20, 1982, in the Commission's Hearing Room, 701 E Street NW., Washington, D.C. 20436, beginning at 10:00 a.m. The hearing will be divided into two parts. First, the Commission will hear oral arguments on the presiding officer's recommended determination that a violation of section 337 of the Tariff Act of 1930 exists. Second, the Commission will hear presentations concerning appropriate relief, the effect that such relief would have upon the public interest, and the proper amount of the bond during the Presidential review period in the event that the Commission determines that there is a violation of section 337 and that relief should be granted. These matters will be heard on the same day in order to facilitate the completion of this investigation within time limits established under law and to minimize the burden of this hearing upon the parties.

ORAL ARGUMENTS: Any party to the Commission's investigation or any interested Government agency may present an oral argument concerning the presiding officer's recommended determination. That portion of a party's or an agency's total time allocated to oral argument may be used in any way the party or agency making argument sees fit, i.e., a portion of the time may be reserved for rebuttal or devoted to summation. The oral arguments will be held in the following order: complainant, respondents, Government agencies, and the Commission investigative attorney. Any rebuttals will be held in this order: respondents, complainant, Government agencies, and the Commission investigative attorney. Persons making

oral argument are reminded that such argument must be based upon the evidentiary record certified to the Commission by the presiding officer.

ORAL PRESENTATIONS ON RELIEF, BONDING, AND THE PUBLIC INTEREST: Following the oral arguments on the presiding officer's recommendation, parties to the investigation, Government agencies, public-interest groups, and interested members of the public may make oral presentations on the issues of relief, bonding, and the public interest. This portion of the hearing is quasi-legislative in nature; presentations need not be confined to the evidentiary record certified to the Commission by the presiding officer, and may include the testimony of witnesses. Oral presentations on relief, bonding, and the public interest will be heard in the same order as oral arguments on the recommended determination.

If the Commission finds that a violation of section 337 has occurred, it may issue (1) an order which could result in the exclusion of the subject articles from entry into the United States and/or (2) an order which could result in one or more respondents being required to cease and desist from engaging in unfair methods of competition or unfair acts in the importation and sale of such articles. Accordingly, the Commission is interested in hearing presentations which address the form of relief, if any, which should be ordered.

If the Commission concludes that a violation of section 337 has occurred and contemplates some form of relief, it must consider the effect of that relief upon the public interest. The factors which the Commission will consider include the effect that an exclusion order and/or a cease and desist order would have upon (1) the public health and welfare, (2) competitive conditions in the U.S. economy, (3) the U.S. production of articles which are like or directly competitive with those which are the subject of the investigation, and (4) U.S. consumers.

If the Commission finds that a violation of section 337 has occurred and orders some form of relief, the President has 60 days to approve or disapprove the Commission's action. During this period, the subject articles would be entitled to enter the United States under a bond in an amount determined by the Commission and prescribed by the Secretary of the Treasury. The Commission is therefore interested in hearing presentations concerning the amount of the bond, if any, which should be imposed.

TIME LIMIT FOR ORAL ARGUMENT AND ORAL PRESENTATION: Parties and Government agencies will be limited to a total of 30 minutes (exclusive of time consumed by questions from the Commission or its advisory staff) for making both oral argument on

violation and oral presentations on remedy, bonding, and the public interest. Persons making only oral presentations on remedy, bonding, and the public interest will be limited to 10 minutes (exclusive of time consumed by questions from the Commission and its advisory staff). The Commission may in its discretion expand the aforementioned time limits upon receipt of a timely request to do so.

WRITTEN SUBMISSIONS: In order to give greater focus to the hearing, the parties to the investigation and interested Government agencies are encouraged to file briefs on the issues of violation (to the extent they have not already briefed that issue in their written exceptions to the presiding officer's recommended determination), remedy, bonding, and the public interest. The complainant and the Commission investigative attorney are also requested to submit a proposed exclusion order and/or proposed cease and desist orders for the Commission's consideration. Persons other than the parties and Government agencies may file written submissions addressing the issues of remedy, bonding, and the public interest. Written submissions on the question of violation must be filed not later than the close of business on December 31, 1981; written submissions on the questions of remedy, bonding, and public interest must be filed not later than the close of business on January 7, 1982. During the course of the hearing, the parties may be asked to file posthearing briefs.

NOTICE OF APPEARANCE: Written requests to appear at the Commission hearing must be filed with the Office of the Secretary by January 13, 1982.

ADDITIONAL INFORMATION: The original and 11 true copies of all briefs on violation must be filed with the Office of the Secretary not later than December 31, 1981; the original copy and 11 true copies of all briefs on remedy, bonding and public interest must be filed with the Office of the Secretary not later than January 7, 1982. Any person desiring to discuss confidential information, or to submit a document (or a portion thereof) to the Commission in confidence, must request in camera treatment unless the information has already been granted such treatment by the presiding officer. All such requests should be directed to the Secretary to the Commission and must include a full statement of the reasons why the Commission should grant such treatment. Documents or arguments containing confidential information approved by the Commission for in camera treatment will be treated accordingly. All nonconfidential written submissions will be available for public inspection at the Secretary's Office.

Notice of this investigation was published in the Federal Register of April 29, 1981, 45 F.R. 24035.

FOR FURTHER INFORMATION CONTACT: Clarease E. Mitchell, Esq., Office of the General Counsel, U.S. International Trade Commission, telephone 202–523–0148.

By order of the Commission.

Issued: December 7, 1981.

KENNETH R. MASON,
Secretary.

Investigation No. 701–TA–80 (Final)

LAMB MEAT FROM NEW ZEALAND

AGENCY: United States International Trade Commission.

ACTION: Institution of a final countervailing duty investigation.

EFFECTIVE DATE: December 4, 1981.

FOR FURTHER INFORMATION CONTACT: Mr. Stephen P. Miller, Office of Investigations, (202–523–0305).

SUPPLEMENTARY INFORMATION:

BACKGROUND

On April 23, 1981, a petition was filed with the Department of Commerce by counsel for the National Wool Growers Association, Inc., Salt Lake City, Utah, alleging that imports of lamb meat from New Zealand are being subsidized within the meaning of section 303 of the Tariff Act of 1930 (19 U.S C. §1303). The National Lamb Feeders Association, Inc., Menard, Texas, became a copetitioner on May 12, 1981. As New Zealand was not at that time a "country under the Agreement" within the meaning of section 701(b) of the Act with U.S.C. §1671(b), there was no requirement that the Commission conduct a preliminary material injury investigation pursuant to section 703(a).

On September 17, 1981, however, the United States Trade Representative announced that New Zealand had become a "country under the Agreement" (46 F.R. 46263). Accordingly, Commerce terminated its investigation under section 303, initiated an investigation under section 702, and notified the Commission of its action.

On November 18, 1981 (46 F.R. 56676) the Commission determined by a 4–2 vote, on the basis of the information developed during the course of investigation No. 701–TA–80 (Preliminary), that there is reasonable indication that an industry in the United States is materially injured, or is threatened with material injury, by reason of imports from New Zealand of lamb meat, provided for in item 106.30

of the Tariff Schedules of the United States (TSUS), which allegedly are being subsidized by the government of New Zealand.

On November 24, 1981, the Department of Commerce made a preliminary determination under section 703(b) of the Tariff Act of 1930 that there is a reasonable basis to believe or suspect that the Government of New Zealand grants to manufacturers, producers, or exporters of lamb meat benefits which constitute a subsidy within the meaning of the countervailing duty law. Commerce estimates these subsidies to be 6.19 percent of the f.o.b. value of lamb meat exports to the United States. Accordingly effective November 30, 1981, the Commission instituted Investigation No. 701–TA–80 (Final) to determine whether an industry in the United States is materially injured, or is threatened with material injury, or the establishment of an industry is materially retarded, by reason of imports of such merchandise. This investigation will be conducted according to provisions of Part 207 of the Commission's Rules of Practice and Procedure (19 CFR § 207, 44 F.R. 76457). The final determination by the Department of Commerce of whether subsidies are being provided by the Government of New Zealand will be made not later than February 4, 1982, unless the investigation is extended.

Staff report. A staff report containing preliminary findings of fact will be available to all parties on January 19, 1982.

Written submissions. Any person may submit to the Commission on or before February 18, 1982, a written statement of information pertinent to the subject matter of this investigation. A signed original and nineteen copies of such a statement must be filed at the office of the Secretary, U.S. International Trade Commission Building, 701 E Street, NW., Washington, D.C. 20436.

Any business information which a submitter desires the Commission to treat as confidential shall be submitted separately and each sheet must be clearly marked at the top "Confidential Business Data." Confidential submissions must conform with the requirements of section 201.6 of the Commission's Rules of Practice and Procedure (19 CFR § 201.6). All written submissions, except for confidential business data, will be available for public inspection.

Public hearing. The Commission will hold a public hearing in connection with this investigation on February 11, 1982, in the Hearing Room of the U.S. International Trade Commission Building, 701 E Street, NW., Washington, D.C. 20436, beginning at 10:00 a.m., e.s.t. Requests to appear at the hearing should be filed in writing with the Secretary to the Commission not later than the close of business (5:15 p.m., e.s.t.) February 5, 1982. All persons desiring to appear at the hearing and make oral presentations must file prehearing state-

ments and should attend a prehearing conference to be held at 10:00 a.m., e.s.t., January 21, 1982, in Room 117 at the U.S. International Trade Commission Building. Prehearing statements must be filed on or before February 5, 1982. For further information concerning the conduct of the investigation, hearing procedures, and rules of general applications, consult the Commission's Rules of Practice and Procedure, Part 207, Subpart A and C (19 CFR § 207), and parts 201, Subparts A through E (19 CFR 201).

This notice is published pursuant to § 207.20 of the Commission's Rules of Practice and Procedure (19 CFR § 207.20, 44 F.R. 76458).

By order of the Commission.

Issued: December 7, 1981.

KENNETH R. MASON,
Secretary.

Index

U.S. Customs Service

Treasury decisions:	T.D. No.
Carrier bonds	81-305
Fee schedule for vessel services	81-304
Foreign currencies; Daily rates:	
November 9-13, 1981	81-306
November 16-20, 1981	81-308
November 23-27, 1981	81-310
Foreign currencies; Variances:	
November 9-13, 1981	81-307
November 16-20, 1981	81-309
November 23-27, 1981	81-311

☆ U.S. GOVERNMENT PRINTING OFFICE : 1982 O - 357-933

DEPARTMENT OF THE TREASURY
U.S. CUSTOMS SERVICE
WASHINGTON, D.C. 20229

OFFICIAL BUSINESS
PENALTY FOR PRIVATE USE, $300

POSTAGE AND FEES PAID
DEPARTMENT OF THE TREASURY (CUSTOMS)
(TREAS. 552)

U.S.MAIL